PUEBLO ROAD
SEQUENCE NO. 826
STORMWATER MANAGEMENT POND MAINTENANCE

GAITHERSBURG (9th) ELECTION DISTRICT
MONTGOMERY COUNTY, MARYLAND

Sequence of Construction

Notes:
A. Prior to clearing of trees, installing sediment control measures, or grading, a pre-construction meeting must be conducted on-site with:
   a. Montgomery County Department of Permitting Services (MCDPS) Sediment Control inspector (240) 777-6311 (5 days notice)
   b. Maryland National Capital Park and Planning Commission (M-NCPPC) Parks inspector (301) 495-2558 (5 days notice)
   c. Maryland National Capital Park and Planning Commission (M-NCPPC) Forest Conservation inspector (301) 495-4571 (5 days notice)
   d. Montgomery County Department of Environmental Protection (MCDEP) (240) 777-7723 (5 days notice)
   e. Owner's Arborist (5 days notice)
   f. Site Engineer (301) 434-7000 (5 days notice).
B. Field adjustments to save additional trees may be required in the field at the time of stakeout of this access route at the discretion of M-NCPPC and the Parks Department. alignment shown on the plan will be adhered to as much as possible.
C. The limits of disturbance must be field marked prior to the pre-construction meeting, clearing of trees, installation of sediment control measures, construction, or other land disturbing activities (sheets 7 and 18).
D. It is the responsibility of the contractor to coordinate location of potential impacted site utilities and to field verify their location via test pits prior to commencing any grading or earth excavation activities.

Installation of Sediment Control Devices

1. Locate all underground utilities per general note #11 (sheet 1). Field verify with test pits.
2. Clear and grade for installation of sediment control devices.
3. Install stabilized construction entrances at the access road to Sequence 826 at Sioux Lane (sheet 7).
4. Install access road as shown on plan (sheet 7). Field-coordinate location of access road with M-NCPPC and MCDEP staff.
5. Install sediment controls where shown on the plan (sheet 7). With permission of the M-NCPPC Forest Conservation inspector, tree protection fence may be omitted in locations where super silt fence is installed.
6. Once the sediment control devices are installed, the permittee must obtain written approval from the MCDPS Sediment Control inspector, M-NCPPC Parks inspector, and M-NCPPC Forest Conservation inspector before proceeding with any additional clearing, grubbing, or grading.

Sequence 826 Embankment Excavation and Diversion Installation

A. With MCDPS sediment control inspector's permission, a removable pumping station may be used.
B. This is a MDE Class I stream. Stream diversion must be in place prior to stream closure date of March 1. Stream closure period for this stream is March 1 - June 15.
C. With MCDEP, M-NCPPC Parks, and engineer's approval, the diversion channel be adjusted or relocated as necessary to provide enough clearance to complete construction.
D. Item 10 must be performed under supervision of a professional geotechnical engineer.

7. Install temporary bridge crossing and mountable berms downstream of embankment to allow access to both sides of stream.
8. Begin excavating existing embankment as shown (sheet 7). Maintain minimum side slopes of 2:1. Using excavated material, construct temporary Type B-2 earth dikes as shown in Phase I (sheet 7) to divert flow into the riser and away from the sewer line. Cut opening in riser if necessary.
9. Line the earth dikes with 30 mil plastic liner. Anchor plastic liner with sandbags as necessary.
10. Install sump pit, pump, and dirt bag system in work area.
11. Excavate remaining embankment necessary to perform sewer work
12. Completely dewater work area. Refer to sheet 7A of 24 for project phasing.

Phase I
13. Remove eastern 1/2 of embankment up to principal spillway. Construct diversion berm divert water thru existing principal spillway.

Sequence 826 Existing Sewer Abandonment and Replacement
14. Execute WSSC Contract 08RM56999A to abandon the existing length of sewer line through the embankment and replace the sewer line under supervision of WSSC. Install bottom half of anti-seep collar. Backfill work to be done in a manner consistent with MD-378 in the area of the embankment and under supervision of a professional geotechnical engineer.

Backfill to trench to grade that matches existing grade upstream and downstream of embankment.
Sequence 826 Installation of Wing and Weir Walls (see sheet 13 for additional construction notes)

A. This work to be performed under supervision of a professional geotechnical engineer.
B. Use of a stone base is NOT PERMITTED for any footing installation. Use a mudmat if the geotechnical engineer determines the ground to not be suitable for footing.

Phase II
15. Demolish and remove existing riser and twin 54" B.C.C.M.P. barrels.
16. Construct another temporary Type B-2 earth dike as shown in Phase II (sheet 7A) to divert flow away from wing and weir wall installation.
17. Install temporary sand bag diversion walls as shown (sheet 7A) on both sides of diversion channels and earth berms separated 15' apart. Line the earth dikes with 30 mil plastic liner. Anchor plastic liner with sandbags as necessary.
18. Excavate and prepare ground for wing wall footer installation. Use of a stone base is NOT PERMITTED.
19. Form and pour wing wall footers.
20. Form and pour wing walls and anti-seepage wall extensions.
21. Backfill around the west wing wall to proposed grade including installation of the clay core per MD-378 guidelines. Key in the clay core and embankment backfill lifts to existing ground per direction of a professional geotechnical engineer.
22. Stabilize all backfilled areas.
23. Form and pour weir wall footer.
24. Form and pour weir wall panels except for the 10' section to be left open for care of water. Pour weir wall around 12" D.I.P. low flow pipe.
25. Form and pour concrete slab for low flow device and 5' wide concrete invert slab on downstream side of weir wall.
26. Install Reno mattress and gabions at weir outfall.

Sequence 826 Installation of Low Flow and Permanent Erosion Control Measures

27. Install low flow as shown on plan (sheet 10). Once installed, keep completely open until project completion. Continue diverting stream base flow until items 25-29 are completed.
28. Install low flow trash rack as shown on plan (sheet 10).
29. Complete excavation and grading in wetland area upstream of weir wall (sheet 10).
30. Backfill around weir wall to proposed grade on upstream and downstream sides (sheet 10). Mine backfill material from temporary earth dikes.
31. Install riprap and step pools downstream of weir wall as shown on plan (sheets 10 and 12).

Sequence 826 Remaining Embankment Backfill and Finishing Work

Phase III

Notes:
A. Items 32-33 to be done with three (3) days of dry weather forecast. Maintain pump-around to keep work area dry.
B. This is a MDE Class I stream. Stream diversion must be in place prior to stream closure date of March 1. Stream closure period for this stream is March 1 - June 15.

32. Dismantle earth dike from Phase II and construct a Type B-2 earth dike as shown in Phase III (Sheet 7A) and direct base flow through low flow opening and 10' opening in weir wall.
33. Backfill around the east wing wall to proposed grade including installation of the upper portion of the anti-seep collar, clay core and sand filter diaphram per MD-378 guidelines. Do not backfill around 10' opening in weir wall. Key in the clay core and embankment backfill lifts to existing ground per direction of a professional geotechnical engineer. Mine backfill material from temporary earth dikes.
34. Remove temporary diversion through 10' opening in weir wall. Pour remaining 10' section of weir wall. Pour section of weir wall around 12" D.I.P. pond drain pipe and pour pond drain slab.
35. Finish backfilling and grading site to final grade.
36. Install low flow orifice plate on downstream side of weir wall over low flow orifice.
37. Install perforated P.V.C. intake (w/ end cap) on upstream end of pond drain pipe.
38. Seed new wetland area upstream of weir wall with wetland seed mix as shown and specified on plan (sheet 13).
39. Permanently stabilize all remaining disturbed areas.

Construction Completion

40. Permanently stabilize all remaining disturbed portions of both work areas.
41. Repair any and all damage to the construction access (tire ruts, depressed curb, dead sod, etc.)
42. With written permission of the MCDPS inspector, close the pond drain valve and remove all remaining sediment controls including temporary earth dikes.
43. Complete and obtain approval of as-built drawings of Sequence 826 from MCDPS.

MISS UTILITY

The Contractor shall call "Miss Utility" at 1-800-257-7777, 48 hours prior to the start of work. The Contractor is responsible for ensuring that all underground utilities in the area of proposed work are located prior to commencing construction work. The Contractor is responsible for compliance with requirements of Chapter 36A of the Montgomery County Code.

The contractor is also responsible for locating all private utilities (not located by Miss Utility) within M-NCPPC property at their expense. All utilities shown on the plans are provided for information only and shall be considered approximate. M-NCPPC shall not be responsible for locating underground utilities. Any utilities or other underground facilities damaged during construction shall be repaired/replaced at the Contractor's sole expense.

BEST MANAGEMENT PRACTICES FOR WORKING IN NONTIDAL WETLANDS, WETLAND BUFFERS, WATERWAYS, AND 100-YEAR FLOODPLAINS

1) No excess fill, construction material, or debris shall be stockpiled or stored in nontidal wetlands, nontidal wetland buffers, waterways, or the 100-year floodplain.
2) Place materials in a location and manner which does not adversely impact surface or subsurface water flow into or out of nontidal wetlands, nontidal wetland buffers, waterways, or the 100-year floodplain.
3) Do not use the excavated material as backfill if it contains waste metal products, unsightly debris, toxic material, or any other deleterious substance. If additional backfill is required, use clean material free of waste metal products, unsightly debris, toxic material, or any other deleterious substance.
4) Place heavy equipment on mats or suitably operate the equipment to prevent damage to nontidal wetlands, nontidal wetland buffers, waterways, or the 100-year floodplain.
5) Repair and maintain any serviceable structure or fill so there is no permanent loss of nontidal wetlands, nontidal wetland buffers, or waterways, or permanent modification of the 100-year floodplain in excess of that lost under the originally authorized structure or fill.
6) Rectify any nontidal wetlands, wetland buffers, waterways, or 100-year floodplain temporarily impacted by any construction.
7) All stabilization in the nontidal wetland and nontidal wetland buffer shall consist of the following species: Annual Ryegrass (Lolium multiflorum), Millet (Setaria italica), Barley (Hordeum sp.), Oats (Liniola sp.), and/or Rye (Secale cereale). These species will allow for the stabilization of the site while also allowing for the voluntary revegetation of natural wetland species. Other non-persistent vegetation may be acceptable, but must be approved by the Nontidal Wetlands and Waterways Division. **Kentucky 31 fescue shall not be utilized in wetland or buffer areas.** The area should be seeded and mulched to reduce erosion after construction activities have been completed.
8) After installation has been completed, make post-construction grades and elevations the same as the original grades and elevations in temporarily impacted areas.
9) To protect aquatic species, in-stream work is prohibited as determined by the classification of the stream:

   Use I waters: In-stream work shall not be conducted during the period March 1 through June 15, inclusive, during any year.
   Use III waters: In-stream work shall not be conducted during the period October 1 through April 30, inclusive, during any year.
   Use IV waters: In-stream work shall not be conducted during the period March 1 through May 31, inclusive, during any year.
10) Stormwater runoff from impervious surfaces shall be controlled to prevent the washing of debris into the waterway.
11) Culverts shall be constructed and any riprap placed so as not to obstruct the movement of aquatic species, unless the purpose of the activity is to impound water.

GENERAL NOTES FOR WORK ON M-NCPPC PROPERTY

1. A PRE-CONSTRUCTION MEETING MUST BE HELD PRIOR TO START OF WORK WITH 72-HOURS PRIOR NOTICE. THE M-NCPPC PARK MANAGER, INSPECTOR, AND ARBORIST SHALL BE REPRESENTED AT THE MEETING.
2. M-NCPPC RESERVES THE RIGHT TO ADJUST AND MODIFY THE LIMITS OF DISTURBANCE IN THE FIELD TO MINIMIZE IMPACTS OF WORK.
3. CONTRACTOR SHALL BE RESPONSIBLE FOR MAINTAINING SAFE FACILITY ACCESS THROUGHOUT CONSTRUCTION AND PROVIDE ANY APPROPRIATE DETOURS, TEMPORARY FACILITIES, AND SIGNAGE AS REQUESTED BY THE PARK MANAGER.
4. SITE RESTORATION AND REPAIR/REPLACEMENT OF DAMAGED INFRASTRUCTURE SHALL BE IN ACCORDANCE WITH M-NCPPC DETAILS, STANDARDS, AND SPECIFICATIONS AT THE DIRECTION OF THE M-NCPPC INSPECTOR AT NO COST TO M-NCPPC.
5. TREE PROTECTION FENCING SHOULD BE 14-GAUGE WELDED WIRE TYPE (WITH METAL STAKES AT 10 FEET O.C.) AND MUST BE MAINTAINED THROUGHOUT CONSTRUCTION. TREE SAVE AREA SIGNAGE SHOULD BE POSTED EVERY 30 FEET ALONG FENCING. TREE PROTECTION FENCE SHOULD BE INSTALLED BY THE CONTRACTOR AND INSPECTED BY M-NCPPC ARBORIST PRIOR TO START OF CONSTRUCTION.
6. THE ENTIRE L.O.D. SHALL BE FENCED AS DIRECTED BY THE PARK INSPECTOR. WHERE SILT FENCE, SUPER SILT FENCE, OR TREE PROTECTION FENCE IS NOT REQUIRED, ORANGE BLAZE SAFETY FENCE MAY BE USED.
7. ALL PLANTING SUBSTITUTIONS MUST BE APPROVED BY M-NCPPC HORTICULTURIST. PLANT MATERIALS AND LOCATIONS SHOULD BE INSPECTED BY M-NCPPC HORTICULTURIST PRIOR TO INSTALLATION.
8. PROVIDE 4-FOOT HIGH (1-FOOT MINIMUM DIAMETER) 14-GAUGE WELDED WIRE DEER PROTECTION CAGES WITH MINIMUM OF ONE SUPPORT STAKE FOR ALL REFORESTATION TREES AND SHRUBS TO PREVENT DAMAGE BY DEER. DO NOT USE TUBEX AS A SUBSTITUTE.
9. STAGING AREAS AND ACCESS ROUTES SHALL BE DETERMINED IN FIELD TO MINIMIZE IMPACTS.
10. SPECIAL PROTECTION MEASURES, INCLUDING BUT NOT LIMITED TO 12-INCH THICK MULCH LAYER ACCESS BEDDING, MATTING, TREE PROTECTION FENCING, AND SEDIMENT CONTROLS SHALL BE PROVIDED AS DIRECTED IN FIELD BY M-NCPPC. M-NCPPC RESERVES THE RIGHT TO INSPECT CONDITION OF TREES THROUGHOUT CONSTRUCTION AND MAY REQUIRE REPAIR, REMOVAL, AND/OR REPLACEMENT OF ANY DAMAGED TREES AT NO COST TO M-NCPPC OR COUNTY.
11. THE CONTRACTOR SHALL BE SOLELY RESPONSIBLE FOR UTILITY CLEARANCE PRIOR TO WORK AND MUST CONTACT M-NCPPC SMARTPARK'S SERVICE CENTER AT (301) 670-8080 ONCE MISS UTILITY CLEARANCE IS OBTAINED AND FORTY-EIGHT HOURS PRIOR TO THE START OF CONSTRUCTION FOR LOCATION OF ALL M-NCPPC UNDERGROUND UTILITIES.
12. CONTRACTOR AND OWNER TO COORDINATE THE USE OF FILTER LOGS WITH THE MCDPS SEDIMENT CONTROL INSPECTOR IN THE VICINITY OF MATURE TREES.

GENERAL NOTES

1. PRIOR TO ALL VEGETATIVE STABILIZATION, ALL DISTURBED AREAS MUST BE TOPSOILED PER THE MDE "STANDARDS AND SPECIFICATIONS FOR TOPSOIL" (SEE SHEET 8)
2. THERE IS A 100 YR. FLOOD PLAIN WHERE WORK WILL BE PERFORMED AND A FLOOD PLAIN PERMIT IS REQUIRED
3. BEFORE BREAKING GROUND, READ AND UNDERSTAND THE SEQUENCE OF CONSTRUCTION ON YOUR PLAN.
4. ONLY APPROVED PLANS THAT HAVE BEEN SIGNED BY THE APPROPRIATE REGULATING AUTHORITY SHALL BE USED FOR THE CONSTRUCTION OF THE IMPROVEMENTS SHOWN ON THESE DRAWINGS. AUTOCADD FILES OR OTHER ELECTRONIC FILES ARE NOT TO BE USED FOR CONSTRUCTION PURPOSES.
5. THE EXISTING UTILITIES SHOWN HEREON HAVE BEEN LOCATED USING INFORMATION AVAILABLE AT THE TIME THIS PLAN WAS PREPARED. PRIOR TO DIGGING, THE CONTRACTOR SHALL LOCATE ALL EXISTING UTILITIES WITHIN THE LIMITS OF CONSTRUCTION SHOWN ON THIS PLAN AND CONFIRM THAT NO CONFLICTS EXIST. ANY CONFLICTS MUST BE BROUGHT TO THE ATTENTION OF CPJ AND THE OWNER PRIOR TO STARTING CONSTRUCTION.
6. THESE PLANS DO NOT INCLUDE THE NECESSARY PRECAUTIONS FOR CONSTRUCTION SAFETY. ALL CONSTRUCTION MUST BE DONE IN ACCORDANCE WITH THE OCCUPATIONAL SAFETY AND HEALTH ACT OF 1970 AND ALL RULES AND REGULATIONS THERETO APPURTENANT.
7. THE PLANIMETRIC INFORMATION SHOWN ON THIS PLAN IS BASED ON COPYRIGHTED GIS DATA FROM M-NCPPC, AND MAY NOT BE COPIED OR REPRODUCED WITHOUT EXPRESS WRITTEN PERMISSION FROM M-NCPPC.
8. IT IS THE CONTRACTOR'S RESPONSIBILITY TO REPAIR, REPLACE, OR RE-CONSTRUCT IN-KIND ALL EXISTING SITE FEATURES (e.g. CURB, GUTTER, TREES, UTILITIES, SIDEWALK, PAVEMENT, ETC.) DAMAGED AS A RESULT OF PROJECT WORK.

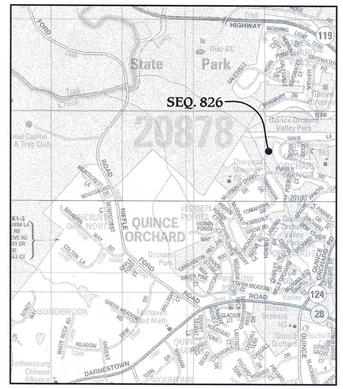

VICINITY MAP
SCALE: 1"=2000'
MAP COPYRIGHT © KAPPA MAP GROUP LLC, (800) 829-6277. USED WITH PERMISSION.

SHEET INDEX
1. COVER SHEET
2. LEGEND AND ABBREVIATIONS
3. DRAINAGE AREA MAP
4. EXISTING CONDITIONS PLAN - PLAN VIEW
5. EXISTING CONDITIONS PLAN - PROFILES
6. EXISTING CONDITIONS PLAN - DETAILS
7. SEDIMENT CONTROL PLAN
7A SEDIMENT CONTROL PLAN
8. SEDIMENT CONTROL DETAILS
9. SEDIMENT CONTROL DETAILS
10. STORMWATER MANAGEMENT POND PLAN VIEW
11. STORMWATER MANAGEMENT POND PROFILES
12. STORMWATER MANAGEMENT POND PROFILES
13. STORMWATER MANAGEMENT POND DETAILS
13A. GABION DETAILS
13B. LANDSCAPE PLAN
14. SAND FILTER DIAPHRAGM DETAILS
15. STEP POOL DETAILS
16. STRUCTURAL - PLAN VIEW
17. STRUCTURAL - SECTIONS
18. STRUCTURAL - SECTIONS AND PLANS
19. STRUCTURAL - ISOMETRIC VIEW
20. STORMWATER MANAGEMENT POND NOTES AND BORING LOGS
21. SEWER REHABILITATION PLAN
22. SEWER REHABILITATION PROFILES AND DETAILS
23. FOREST CONSERVATION PLAN VIEW
24. FOREST CONSERVATION DETAILS

Comparison of Hydraulics (Seq. 826)

Storm Yr.	Ex. Q	Ex. WSEL	Prop. Q	Prop. WSEL
1	64.04	315.80	17.44	325.05
2	84.50	316.40	94.29	325.37
5	287.92	320.10	384.82	326.06
10	506.50	321.71	598.83	326.41
50	762.38	322.69	763.79	326.67
100	991.19	323.38	884.04	326.86

MSCD APPROVAL OF THIS PLAN WILL EXPIRE ONE YEAR FROM THE DATE OF APPROVAL IF THE PROJECT HAS NOT STARTED AND/OR DOES NOT CONTINUE ON SCHEDULE.

APPROVAL PAGES _____ THROUGH _____.

APPROVED FOR POND(S) BY
MONTGOMERY SOIL CONSERVATION DISTRICT

_____ _____
DISTRICT PROGRAM COORDINATOR DATE

ENGINEER'S CERTIFICATION

I certify that this design plan for the construction of the embankment and/or of the site, and was designed in accordance with the requirements of the Soil Conservation District - Maryland Standards and Specifications for Ponds (MD-378). I have reviewed this plan with the Owner/Developer.

Signature _____ Maryland License No. 19908

Name (Printed) BRIAN K. DAVILA Date 3/22/16

THE MARYLAND-NATIONAL CAPITAL PARK AND PLANNING COMMISSION, DEPARTMENT OF PARK AND PLANNING

M-NCPPC RECORD FILE NO. _____

REVIEWED BY _____

APPROVED BY _____
CHIEF, CONSTRUCTION SECTION

DATE APPROVED _____

THIS IS NOT A PERMIT TO BEGIN CONSTRUCTION

THIS APPROVAL IS FOR TECHNICAL REVIEW ONLY. FOR PERMIT FOR PERMIT INFORMATION, CONTACT JAY CHILDS, CONSTRUCTION SUPERVISOR AT (301) 495-2574.

MARYLAND DEPARTMENT OF THE ENVIRONMENT
Water Management Administration • Dam Safety Division
1800 Washington Blvd, Suite 440 • Baltimore, MD 21230-1708
Phone: (410) 537-3538 or 1-800-633-6101 ext.3538 • FAX (410) 537-3553

Martin O'Malley
Governor

Anthony G. Brown
Lieutenant Governor

Robert M. Summers, Ph.D.
Secretary

January 28, 2014

Gene Gopenko
Montgomery County Dept. of Environmental Protection
255 Rockville Pike, Suite 120
Rockville, MD 20850

Project: Pueblo Road SWM Pond
WMA No: 13-XP-0082
Agency Interest (AI): 90849
County: Montgomery
Tracking No: 201360911

Dear Mr. Gopenko:

Your application was forwarded to the Dam Safety Division by the Regulatory Services Coordination Office because the project includes construction, alteration, or repair of a pond. Typically, the construction or repair of a pond requires a permit to be issued by the Dam Safety Division pursuant to Annotated Code of Maryland, Environment Article § 5-503.

However, the statute allows an exemption to this process for certain small ponds, provided that minimum criteria found in Environment Article § 5-503(b) are satisfied. Under the exemption, the plans may be reviewed and approved by the local Soil Conservation District (SCD). The exemption criteria include:

1. Drainage area to the pond is less than 640 acres; and
2. Embankment height (top of dam to the upstream toe) is not greater than 20 feet; and
3. The pond is a low hazard (class 'a') structure whose failure will not likely cause loss of life or property damage.

The dam hazard classification study submitted with your application classifies the dam as "low hazard." Therefore, the Dam Safety Division is exempting this project from the Dam Safety permit requirements. You may elect to have your pond plans processed through the local SCD.

This Small Pond Exemption does not relieve you from the requirement of obtaining any other necessary State or U.S. Army Corps of Engineers permits. Your application may have also been forwarded to the MDE Non-Tidal Wetlands and Waterways Division and the U.S. Army Corps of Engineers for review. You will be contacted directly by those agencies which have regulatory authority over your project.

Recycled Paper www.mde.maryland.gov TTY Users 1-800-735-2258 Via Maryland Relay Service

Gene Gopenko
January 28, 2014
Page 2

Please be advised that we intend to close this file. Please notify us within 4 weeks if you decide not to pursue approval at the local SCD, or do not qualify for the exemption due to a higher hazard classification ('b' or 'c') of the pond.

Should you have any questions, feel free to call Mr. Visty Dalal of my staff at (410) 537-3543.

Sincerely,

Brian S. Clevenger
Program Manager
Sediment, Stormwater, and Dam Safety Program

cc: Engineer: (Brian Davila, Charles P. Johnson & Associates, Inc.)
MDE Wetlands and Waterways Program
Montgomery SCD

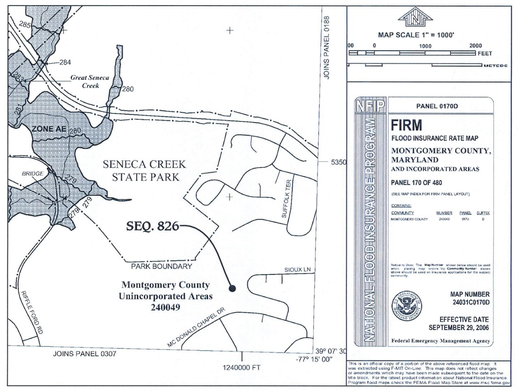

TRAVERSE CHART

BENCHMARK	NORTHING	EASTING	ELEVATION	DESCRIPTION
905	531945.75	1239789.56	346.18	REBAR & CAP SET (CPJ 181)
906	531973.07	1239945.41	351.88	REBAR & CAP SET (CPJ 181)

IT IS THE RESPONSIBILITY OF PERMITTEE/OWNER OF THIS SITE TO OBTAIN ALL REQUIRED PERMITS PRIOR TO ISSUANCE OF THE APPROVED SEDIMENT CONTROL PERMIT:

TYPE OF PERMIT	REQ'D	NOT REQ'D	PERMIT No.	EXPIRATION DATE	WORK RESTRICTION DATES
MCDPS Floodplain District	X				
WATERWAYS/WETLAND(S):					
a. Corps. of Engineers	X		CENAB-OP-RMS (MD DEP/PUEBLO RD) 2013-60911		
b. MDE	X		13-NT-3179		MARCH 1 - JUNE 15
c. MDE Water Quality Certification	X		13-NT-3179		
MDE DAM SAFETY		X			
N.P.D.E.S. NOTICE OF INTENT	X		09MO0088		
OTHERS (Please List):					
MCDPS ACCESS	X		265091	10/2/2011	

STATE OF MARYLAND BRIAN KEITH DAVILA 19908 PROFESSIONAL ENGINEER

PROFESSIONAL CERTIFICATION
I HEREBY CERTIFY THAT THESE DOCUMENTS WERE PREPARED OR APPROVED BY ME, AND THAT I AM A DULY LICENSED PROFESSIONAL ENGINEER UNDER THE LAWS OF THE STATE OF MARYLAND.
LICENSE # 19908
EXPIRATION DATE 01/06/2017

MONTGOMERY COUNTY DEPARTMENT OF PERMITTING SERVICES APPROVED FOR:

Stormwater Management:
Reviewed Date
Approved Date
N/A
S.M.File No.

Sediment Control Technical Requirements:
Reviewed Date
Approved Date

NOTE: MCDPS APPROVAL DOES NOT NEGATE THE NEED OF A MCDPS ACCESS PERMIT.

Administrative Requirements:
Reviewed Date
232507
SEDIMENT CONTROL PERMIT No.

MCDPS APPROVAL OF THIS PLAN WILL EXPIRE ONE YEAR FROM THE DATE OF APPROVAL, IF THE PROJECT HAS NOT STARTED, UNLESS THE PERMIT HAS BEEN EXTENDED.

STORMWATER MANAGEMENT
POND MAINTENANCE
SEQUENCE NO. 826
COVER SHEET
PUEBLO ROAD
GAITHERSBURG (9th) ELECTION DISTRICT
MONTGOMERY COUNTY, MARYLAND

CPJ Associates
Charles P. Johnson & Associates, Inc.
Civil and Environmental Engineers • Planners • Landscape Architects • Surveyors
1751 Elton Rd., Ste. 300 Silver Spring, MD 20903 301.434.7000 Fax: 301.434.9394
www.cpja.com • Gaithersburg, MD • Frederick, MD • Stevensville, MD • Fairfax, VA

CLIENT: Montgomery County Department of Environmental Protection 255 Rockville Pike, Suite 120 Rockville, Maryland 20850-4166 Phone: (240) 777-7723 Contact: Mr. Gene Gopenko

PRELIMINARY PLAN NO: N/A
SITE PLAN NO: N/A
DESIGN JBB
DRAFT GC
DATE APRIL, 2016
SCALE AS-SHOWN
SHEET 1 OF 24
FILE NO: 36-188-24.02B

COPYRIGHT © LATEST DATE HEREON CHARLES P. JOHNSON & ASSOCIATES, INC. ALL RIGHTS RESERVED. UNAUTHORIZED USE OR REPRODUCTION IS PROHIBITED.

Attached Xrefs: GIS Topo-565/08-565-02/TB24x36

EXISTING FEATURES LEGEND

- EXISTING 2 FT. CONTOURS — 342
- EXISTING 10 FT. CONTOURS — 340
- EXISTING 5 FT. CONTOURS (PROVIDED BY GIS) — 345
- EXISTING TREE LINE
- EXISTING OVERHEAD WIRES — OW
- EXISTING 100 YR. FLOODPLAIN — FP
- EXISTING 25' FLOODPLAIN BRL — BRL
- STREAM VALLEY BUFFER — SVB
- EX. PEPCO POLE
- EXISTING TREE — 23
- EXISTING TREE TO BE REMOVED — 23
- EXISTING STORM DRAIN
- EXISTING SEWER
- ABANDONED SEWER
- DRAINAGE DIVIDE
- FLOW PATH
- SOIL TYPE DIVIDE — 16D / 2C
- EXISTING STREAM (WATER OF THE STATE)
- EXISTING BUILDING
- EXISTING WSSC RIGHT-OF-WAY
- EXISTING WETLANDS — W
- EXISTING 25' WETLANDS BUFFER — WB
- ADJACENT PROPERTY

PROPOSED FEATURES LEGEND

- LIMIT OF DISTURBANCE — LOD
- EARTH DIKE FOR CHANNEL DIVERSION
- MOUNTABLE BERM FOR EARTH DIKE
- VINYL SHEET PILING
- SUPER SILT FENCE — SSF
- SILT FENCE — SF
- TREE PROTECTION FENCE — TPF
- PROPOSED TREE LINE
- STABILIZED CONSTRUCTION ENTRANCE — SCE
- SUMP PIT — SP
- PUMP — P
- FILTER BAG — FB
- TEMPORARY BRIDGE — TB
- PROPOSED SLEEVED SEWER
- PROPOSED 2 FT. CONTOURS
- CPv WSEL= 325.00
- 10 YR. WSEL= 326.41
- 100 YR. WSEL= 326.86
- PROPOSED RIPRAP (CL I)
- MULCH ACCESS PATH
- WETLAND GRASS SEEDING
- STEP POOL
- SOIL BORING LOCATION
- PROPOSED RIGHT-OF-WAY
- PROPOSED 2' CONTOURS — 102
- SIDE SLOPE ELEVATION (H:V) — 3:1
- JERSEY WALL

ABBREVIATIONS

AC	–	ACRES
ACP	–	ASBESTOS CONCRETE PIPE
APPROX.	–	APPROXIMATE
AWWA	–	AMERICAN WATER WORKS ASSOCIATION
BM	–	BENCH MARK
B.R.L.	–	BUILDING RESTRICTION LINE
CATV	–	CABLE TV
C/C	–	CENTER-TO-CENTER
CFS	–	CUBIC FEET PER SECOND
℄	–	CENTERLINE
CL	–	CLASS
CONC.	–	CONCRETE
CMP	–	CORRUGATED METAL PIPE
C.Y.	–	CUBIC YARDS
DA	–	DRAINAGE AREA
DWG	–	DRAWING
DIA.	–	DIAMETER
DTL	–	DETAIL
EA.	–	EACH
ELEV., EL.	–	ELEVATION
ESMT.	–	EASEMENT
EW	–	EACH WAY
EX., EXIST.	–	EXISTING
F.312	–	FOLIO
FB	–	FILTER BAG
FC	–	COMPRESSION STRENGTH STRESS
FP	–	FLOOD PLAIN
FPS	–	FEET PER SECOND
FT	–	FEET
GIS	–	GEOGRAPHIC INFORMATION SERVICES
H.D.P.E.	–	HIGH DENSITY POLYETHYLENE PIPE
INV.	–	INVERT
LBS	–	POUNDS
L.F.	–	LINEAR FEET
L.4368	–	LIBER
MAX.	–	MAXIMUM
MC	–	MONTGOMERY COUNTY
MCDEP	–	MONTGOMERY COUNTY DEPARTMENT OF ENVIRONMENTAL PROTECTION
MCDPS	–	MONTGOMERY COUNTY DEPARTMENT OF PRELIMINARY SERVICES
MD	–	MARYLAND
MDE	–	MARYLAND DEPARTMENT OF ENERGY
MGWC	–	MARYLAND GUIDELINES FOR WATERWAY CONSTRUCTION
M.H., MH	–	MANHOLE
MIN.	–	MINIMUM
MNCPPC	–	MARYLAND NATIONAL CAPITAL PARK AND PLANNING COMMISSION
MOD.	–	MODIFIED
MSHA	–	MARYLAND STATE HIGHWAY ADMINISTRATION
N/A	–	NON-APPLICABLE
NO. / #	–	NUMBER
NORM.	–	NORMAL
NPDES	–	NATIONAL POLLUTANT DISCHARGE ELIMINATION SYSTEM
NRI/FSD	–	NATURAL RESOURCE INVENTORY/ FOREST STAND DELINEATION
NTS	–	NOT TO SCALE
OW	–	OVERHEAD WIRE
P	–	PUMP
PEPCO	–	POTOMAC ELECTRIC POWER COMPANY
PROP.	–	PROPOSED
P.S.I.	–	POUNDS PER SQUARE INCH
P.S.F.	–	POUNDS PER SQUARE FOOT
PVC	–	PLOYVINAL CHLORIDE PIPE
Q	–	FLOW RATE
R.C.P.	–	REINFORCED CONCRETE PIPE
RCN	–	RUNOFF CURVE NUMBER
RPS	–	REMOVE PUMP STATION
R.R.	–	RAIL ROAD
RT.	–	RIGHT
R/W	–	RIGHT OF WAY
S	–	DEWER
SC	–	STORMCEPTOR, SEDIMENT CONTROL
SCE	–	STABILIZED CONSTRUCTION ENTRANCE
SD	–	STORM DRAIN
SEQ	–	SEQUENCE
SF	–	SQUARE FEET
SSF	–	SUPER SILT FENCE
SP	–	SUMP PIT
S.Y.	–	SQUARE YARDS
STA.	–	STATION
STD.	–	STANDARD
SMH	–	SANITARY MANHOLE
SWM	–	STORMWATER MANAGEMENT
SW	–	STORMWATER MANAGEMENT BORING
SVB	–	STREAM VALLEY BUFFER
TB	–	TEMPORARY BRIDGE
TC	–	TIME OF CONCENTRATION
TPF	–	TREE PROTECTION FENCE
TYP.	–	TYPICAL
WSEL	–	WATER SURFACE ELEVATION
WSSC	–	WASHINGTON SUBURBAN SANITATION COMMISSION

M.C.D.P.S. APPROVED FOR:

Stormwater Management:

Reviewed Date

Approved Date

N/A
S.M.File No.

Sediment Control Technical Requirements:

Reviewed Date

Approved Date

Administrative Requirements:

Reviewed Date

232507
SEDIMENT CONTROL PERMIT No.

NOTE

MCDPS APPROVAL OF THIS PLAN WILL EXPIRE ONE YEAR FROM THE DATE OF APPROVAL IF THE PROJECT HAS NOT STARTED UNLESS THE PERMIT HAS BEEN EXTENDED.

THIS APPROVAL DOES NOT NEGATE THE NEED OF A MCDPS ACCESS PERMIT.

THE MARYLAND-NATIONAL CAPITAL PARK AND PLANNING COMMISSION, DEPARTMENT OF PARK AND PLANNING

M-NCPPC RECORD FILE NO.

REVIEWED BY

APPROVED BY
CHIEF, CONSTRUCTION SECTION

DATE APPROVED

THIS IS NOT A PERMIT TO BEGIN CONSTRUCTION

This approval is for technical review only. For permit information, contact Jay Childs, Construction Supervisor at (301)495-2574.

STORMWATER MANAGEMENT
POND MAINTENANCE
SEQUENCE NO. 826
LEGEND AND ABBREVIATIONS

PUEBLO ROAD

GAITHERSBURG (9th) ELECTION DISTRICT
MONTGOMERY COUNTY, MARYLAND

STATE OF MARYLAND — BRIAN KEITH DAVIS — 19908 — PROFESSIONAL ENGINEER

PROFESSIONAL CERTIFICATION
I HEREBY CERTIFY THAT THESE DOCUMENTS WERE PREPARED OR APPROVED BY ME, AND THAT I AM A DULY LICENSED PROFESSIONAL ENGINEER UNDER THE LAWS OF THE STATE OF MARYLAND.

LICENSE #: 19908

EXPIRATION DATE: 01/06/2017

CPJ Associates

Charles P. Johnson & Associates, Inc.

Civil and Environmental Engineers • Planners • Landscape Architects • Surveyors

1751 Elton Rd., Ste. 300 Silver Spring, MD 20903 301.434.7000 Fax: 301.434.9394

www.cpja.com • Gaithersburg, MD • Frederick, MD • Stevensville, MD • Fairfax, VA

CLIENT: Montgomery County
Department of Environmental Protection
255 Rockville Pike, Suite 120
Rockville, Maryland 20850-4166
Phone: (240) 777-7723
Contact: Mr. Gene Gopenko

PRELIMINARY PLAN NO: N/A		SITE PLAN NO: N/A	
DESIGN JBB		SHEET 2	OF 24
DRAFT GC			
DATE APRIL, 2016		FILE NO: 36-188-24.02B	
SCALE AS-SHOWN			

COPYRIGHT © LATEST DATE HEREON CHARLES P. JOHNSON & ASSOCIATES, INC. ALL RIGHTS RESERVED. UNAUTHORIZED USE OR REPRODUCTION IS PROHIBITED.

MISS UTILITY

The Contractor shall call "Miss Utility" at 1-800-257-7777, 48 hours prior to the start of work. The Contractor is responsible for ensuring that all underground utilities in the area of proposed work are located prior to commencing construction work. The Contractor is responsible for compliance with requirements of Chapter 36A of the Montgomery County Code.

The contractor is also responsible for locating all private utilities (not located by Miss Utility) within M-NCPPC property at their expense. All utilities shown on the plans are provided for information only and shall be considered approximate. M-NCPPC shall not be responsible for locating underground utilities. Any utilities or other underground facilities damaged during construction shall be repaired/replaced at the Contractor's sole expense.

M.C.D.P.S. APPROVED FOR:

Stormwater Management:

Reviewed Date

Approved Date

N/A
S.M.File No.

Sediment Control Technical Requirements:

Reviewed Date

Approved Date

Administrative Requirements:

Reviewed Date

232507
SEDIMENT CONTROL PERMIT No.

NOTE

MCDPS APPROVAL OF THIS PLAN WILL EXPIRE ONE YEAR FROM THE DATE OF APPROVAL IF THE PROJECT HAS NOT STARTED UNLESS THE PERMIT HAS BEEN EXTENDED.

THIS APPROVAL DOES NOT NEGATE THE NEED OF A MCDPS ACCESS PERMIT.

GRAPHIC SCALE
200 0 100 200 400
SCALE: 1" = 200'

THE MARYLAND-NATIONAL CAPITAL PARK AND PLANNING COMMISSION, DEPARTMENT OF PARK AND PLANNING

M-NCPPC RECORD FILE NO. _____

REVIEWED BY _____

APPROVED BY _____
CHIEF, CONSTRUCTION SECTION

DATE APPROVED _____

THIS IS NOT A PERMIT TO BEGIN CONSTRUCTION

This approval is for technical review only. For permit information, contact Jay Childs, Construction Supervisor at (301)495-2574.

STORMWATER MANAGEMENT
POND MAINTENANCE
SEQUENCE NO. 826
DRAINAGE AREA MAP

PUEBLO ROAD

GAITHERSBURG (9th) ELECTION DISTRICT
MONTGOMERY COUNTY, MARYLAND

STATE OF MARYLAND
BRIAN KEITH DAVIS
19908
PROFESSIONAL ENGINEER

PROFESSIONAL CERTIFICATION
I HEREBY CERTIFY THAT THESE DOCUMENTS WERE PREPARED OR APPROVED BY ME, AND THAT I AM A DULY LICENSED PROFESSIONAL ENGINEER UNDER THE LAWS OF THE STATE OF MARYLAND.

LICENSE # 19908

EXPIRATION DATE: 01/06/2017

CPJ Associates
Charles P. Johnson & Associates, Inc.
Civil and Environmental Engineers • Planners • Landscape Architects • Surveyors
1751 Elton Rd., Ste. 300 Silver Spring, MD 20903 301.434.7000 Fax: 301.434.9394
www.cpja.com • Gaithersburg, MD • Frederick, MD • Stevensville, MD • Fairfax, VA

CLIENT: Montgomery County
Department of Environmental Protection
255 Rockville Pike, Suite 120
Rockville, Maryland 20850-4166
Phone: (240) 777-7723
Contact: Mr. Gene Gopenko

PRELIMINARY PLAN NO. N/A		SITE PLAN NO: N/A	
DESIGN JBB		SHEET 3	OF 24
DRAFT GC			
DATE APRIL, 2016		FILE NO: 36-188-24.02B	
SCALE 1"/200'			

COPYRIGHT © LATEST DATE HEREON CHARLES P. JOHNSON & ASSOCIATES, INC. ALL RIGHTS RESERVED, UNAUTHORIZED USE OR REPRODUCTION IS PROHIBITED.

Attached Xrefs: GIS Topo-565/08-565-02/TB24x36

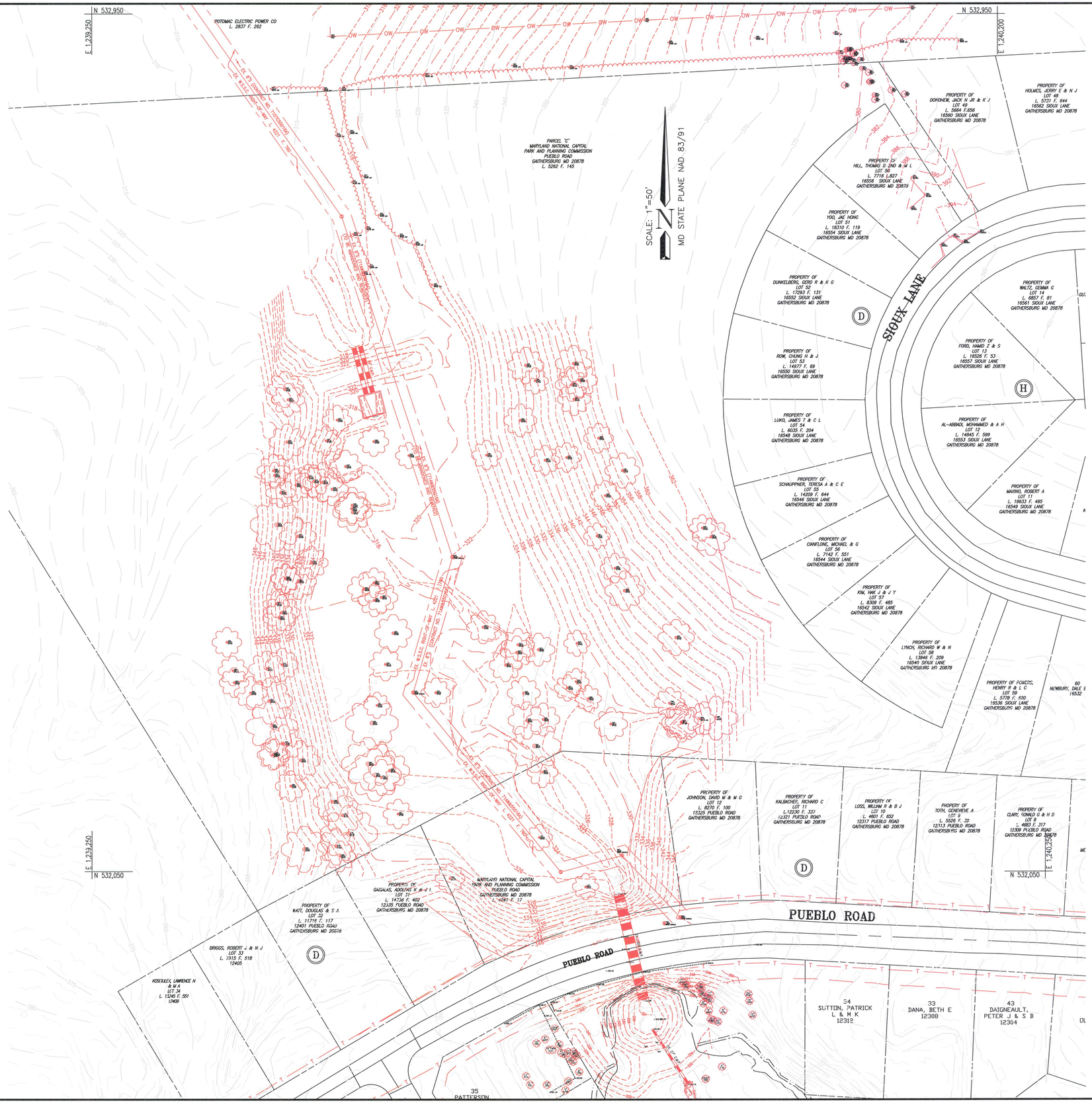

MISS UTILITY

The Contractor shall call "Miss Utility" at 1-800-257-7777, 48 hours prior to the start of work. The Contractor is responsible for ensuring that all underground utilities in the area of proposed work are located prior to commencing construction work. The Contractor is responsible for compliance with requirements of Chapter 36A of the Montgomery County Code.

The contractor is also responsible for locating all private utilities (not located by Miss Utility) within M-NCPPC property at their expense. All utilities shown on the plans are provided for information only and shall be considered approximate. M-NCPPC shall not be responsible for locating underground utilities. Any utilities or other underground facilities damaged during construction shall be repaired/replaced at the Contractor's sole expense.

LEGEND

- EXISTING 2 FT. CONTOURS
- EXISTING 5 FT. CONTOURS
- EXISTING TREE LINE
- EXISTING OVERHEAD WIRES — OW — OW — OW —
- EXISTING PIPES
- EXISTING SANITARY SEWER
- EXISTING WSSC R/W

NOTE:

1. 2' CONTOURS OBTAINED FROM FIELD RUN SURVEY CONDUCTED BY CPJ.
2. 5' CONTOURS OBTAINED FROM GIS DATA PROVIDED BY MONTGOMERY COUNTY, MARYLAND AND M-NCPPC.
3. THIS PLAN REPRESENTS THE EXISTING FIELD SURVEY DETAIL OVERLAYED ONTO THE ORIGINAL DESIGN PLANS. THE VERTICAL DATUM OF THE SURVEY DATA IS APPROXIMATELY TWO (2) VERTICAL FEET LOWER THAN THAT OF THE DESIGN PLAN

0' 12.5' 25' 50' 100'
SCALE: 1"=50'

THE MARYLAND-NATIONAL CAPITAL PARK AND PLANNING COMMISSION, DEPARTMENT OF PARK AND PLANNING

M-NCPPC RECORD FILE NO. _____

REVIEWED BY _____

APPROVED BY _____
CHIEF, CONSTRUCTION SECTION

DATE APPROVED _____

THIS IS NOT A PERMIT TO BEGIN CONSTRUCTION

This approval is for technical review only. For permit For permit information, contact Jay Childs, Construction Supervisor at (301)495-2574.

M.C.D.P.S. APPROVED FOR:

Stormwater Management:

Reviewed Date

Approved Date

N/A
S.M.File No.

Sediment Control Technical Requirements:

Reviewed Date

Approved Date

Administrative Requirements:

Reviewed Date

232507
SEDIMENT CONTROL PERMIT No.

NOTE

MCDPS APPROVAL OF THIS PLAN WILL EXPIRE ONE YEAR FROM THE DATE OF APPROVAL IF THE PROJECT HAS NOT STARTED UNLESS THE PERMIT HAS BEEN EXTENDED.

THIS APPROVAL DOES NOT NEGATE THE NEED OF A MCDPS ACCESS PERMIT.

STORMWATER MANAGEMENT
POND MAINTENANCE
SEQUENCE NO. 826
EXISTING CONDITIONS PLAN - PLAN VIEW

PUEBLO ROAD

GAITHERSBURG (9th) ELECTION DISTRICT
MONTGOMERY COUNTY, MARYLAND

CPJ Associates
Charles P. Johnson & Associates, Inc.
Civil and Environmental Engineers • Planners • Landscape Architects • Surveyors
1751 Elton Rd., Ste. 300 Silver Spring, MD 20903 301.434.7000 Fax: 301.434.9394
www.cpja.com • Gaithersburg, MD • Frederick, MD • Stevensville, MD • Fairfax, VA

STATE OF MARYLAND
BRIAN KEITH DAVIS
19908
PROFESSIONAL ENGINEER

PROFESSIONAL CERTIFICATION
I HEREBY CERTIFY THAT THESE DOCUMENTS WERE PREPARED OR APPROVED BY ME, AND THAT I AM A DULY LICENSED PROFESSIONAL ENGINEER UNDER THE LAWS OF THE STATE OF MARYLAND.

LICENSE # 19908

EXPIRATION DATE: 01/06/2017

CLIENT: Montgomery County
Department of Environmental Protection
255 Rockville Pike, Suite 120
Rockville, Maryland 20850-4166
Phone: (240) 777-7723
Contact: Mr. Gene Gopenko

COPYRIGHT © LATEST DATE HEREON
CHARLES P. JOHNSON & ASSOCIATES, INC.
ALL RIGHTS RESERVED, UNAUTHORIZED USE OR REPRODUCTION IS PROHIBITED.

PRELIMINARY PLAN NO: N/A	SITE PLAN NO: N/A
DESIGN JBB	SHEET 4 OF 24
DRAFT GC	
DATE APRIL, 2016	FILE NO: 36-188-24.02B
SCALE 1"/50'	

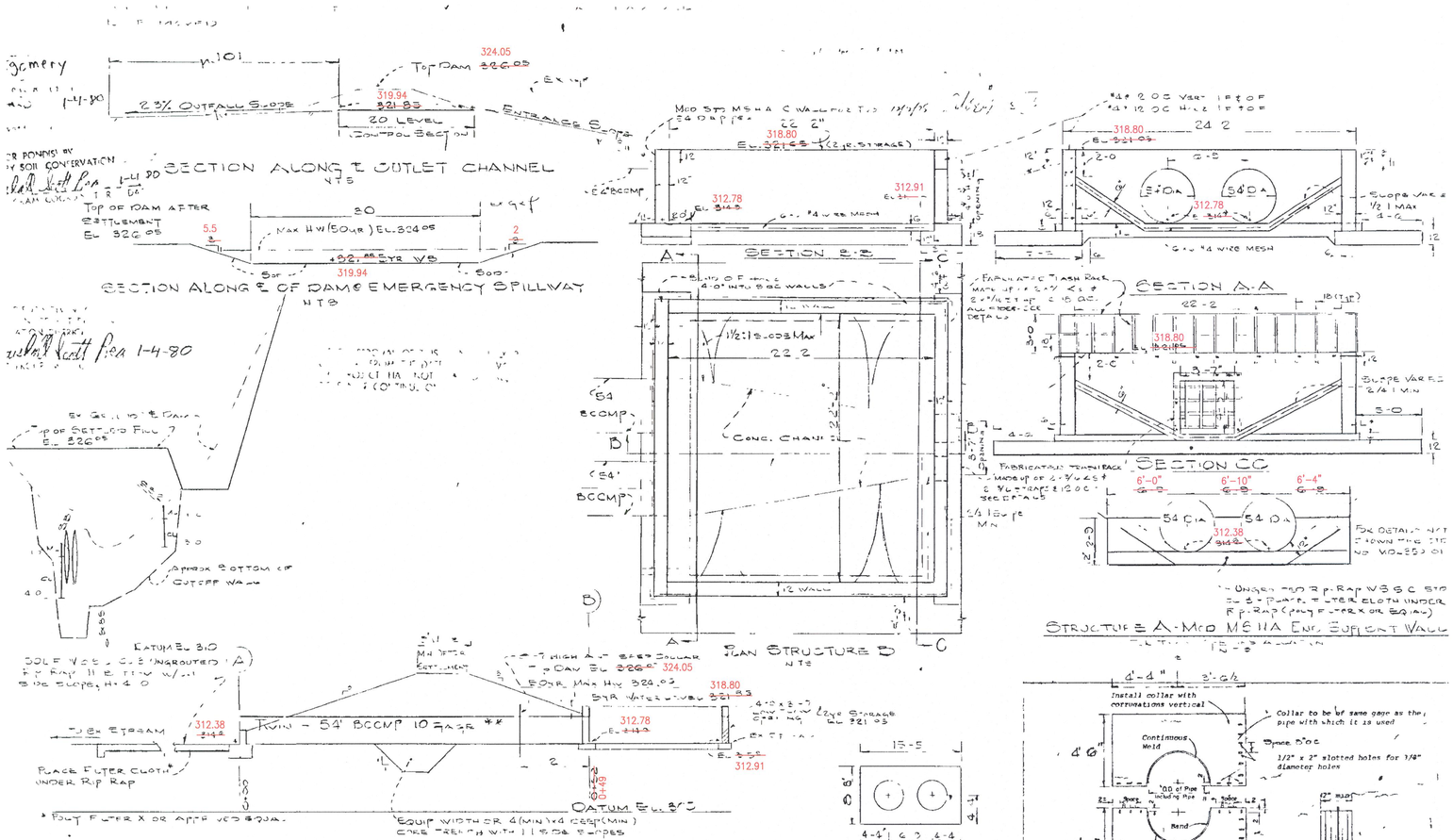

NOTE:
1. 2' CONTOURS OBTAINED FROM FIELD RUN SURVEY CONDUCTED BY CPJ.
2. 5' CONTOURS OBTAINED FROM GIS DATA PROVIDED BY MONTGOMERY COUNTY, MARYLAND AND M-NCPPC.
3. THIS PLAN REPRESENTS THE EXISTING FIELD SURVEY DETAIL OVERLAYED ONTO THE ORIGINAL DESIGN PLANS. THE VERTICAL DATUM OF THE SURVEY DATA IS APPROXIMATELY TWO (2) VERTICAL FEET LOWER THAN THAT OF THE DESIGN PLAN

M.C.D.P.S. APPROVED FOR:

Stormwater Management:

Reviewed Date

Approved Date

N/A
S.M.File No.

Sediment Control Technical Requirements:

Reviewed Date

Approved Date

Administrative Requirements:

Reviewed Date

232507
SEDIMENT CONTROL PERMIT No.

NOTE

MCDPS APPROVAL OF THIS PLAN WILL EXPIRE ONE YEAR FROM THE DATE OF APPROVAL IF THE PROJECT HAS NOT STARTED UNLESS THE PERMIT HAS BEEN EXTENDED.

THIS APPROVAL DOES NOT NEGATE THE NEED OF A MCDPS ACCESS PERMIT.

GRAPHIC SCALE

1 0 0.5 1 2

SCALE: 1" = 1'

THE MARYLAND-NATIONAL CAPITAL PARK AND PLANNING COMMISSION, DEPARTMENT OF PARK AND PLANNING

M-NCPPC RECORD FILE NO. _____

REVIEWED BY _____

APPROVED BY CHIEF, CONSTRUCTION SECTION _____

DATE APPROVED _____

THIS IS NOT A PERMIT TO BEGIN CONSTRUCTION

This approval is for technical review only. For permit For permit information, contact Jay Childs, Construction Supervisor at (301)495-2574.

STORMWATER MANAGEMENT
POND MAINTENANCE
SEQUENCE NO. 826
EXISTING CONDITIONS PLAN PROFILES

PUEBLO ROAD

GAITHERSBURG (9th) ELECTION DISTRICT
MONTGOMERY COUNTY, MARYLAND

STATE OF MARYLAND — BRIAN KEITH JAMES — 19908 — PROFESSIONAL ENGINEER

PROFESSIONAL CERTIFICATION
I HEREBY CERTIFY THAT THESE DOCUMENTS WERE PREPARED OR APPROVED BY ME, AND THAT I AM A DULY LICENSED PROFESSIONAL ENGINEER UNDER THE LAWS OF THE STATE OF MARYLAND.
LICENSE #: 19908
EXPIRATION DATE: 01/06/2017

Charles P. Johnson & Associates, Inc.
Civil and Environmental Engineers • Planners • Landscape Architects • Surveyors
1751 Elton Rd., Ste. 300 Silver Spring, MD 20903 301.434.7000 Fax: 301.434.9394
www.cpja.com • Gaithersburg, MD • Frederick, MD • Stevensville, MD • Fairfax, VA

MISS UTILITY

The Contractor shall call "Miss Utility" at 1-800-257-7777, 48 hours prior to the start of work. The Contractor is responsible for ensuring that all underground utilities in the area of proposed work are located prior to commencing construction work. The Contractor is responsible for compliance with requirements of Chapter 36A of the Montgomery County Code.

The contractor is also responsible for locating all private utilities (not located by Miss Utility) within M-NCPPC property at their expense. All utilities shown on the plans are provided for information only and shall be considered approximate. M-NCPPC shall not be responsible for locating underground utilities. Any utilities or other underground facilities damaged during construction shall be repaired/replaced at the Contractor's sole expense.

CLIENT: Montgomery County, Department of Environmental Protection, 255 Rockville Pike, Suite 120, Rockville, Maryland 20850-4166, Phone: (240) 777-7723, Contact: Mr. Gene Gopenko	PRELIMINARY PLAN NO: N/A	SITE PLAN NO: N/A	
	DESIGN JBB	SHEET 5	OF 24
	DRAFT GC		
	DATE APRIL, 2016	FILE NO: 36-188-24.02B	
	SCALE AS SHOWN		

COPYRIGHT © LATEST DATE HEREON CHARLES P. JOHNSON & ASSOCIATES, INC. ALL RIGHTS RESERVED, UNAUTHORIZED USE OR REPRODUCTION IS PROHIBITED.

Reviewed for Montgomery S.C.D.
and meets Technical Requirements
Date 1-4-80
U.S. Soil Conservation Service WR

APPROVED FOR SEDIMENT / WATER MANAGEMENT
CONSERVATION DISTRICT
1-4-80
DISTRICT PROGRAM COORDINATOR

APPROVED FOR POND(S) BY
MONTGOMERY SOIL CONSERVATION DISTRICT
1-4-80
DISTRICT PROGRAM COORDINATOR

MSCD APPROVAL OF THIS PLAN WILL EXPIRE ONE YEAR FROM THE DATE OF APPROVAL IF THE PROJECT HAS NOT STARTED AND/OR DOES NOT CONTINUE ON SCHEDULE.

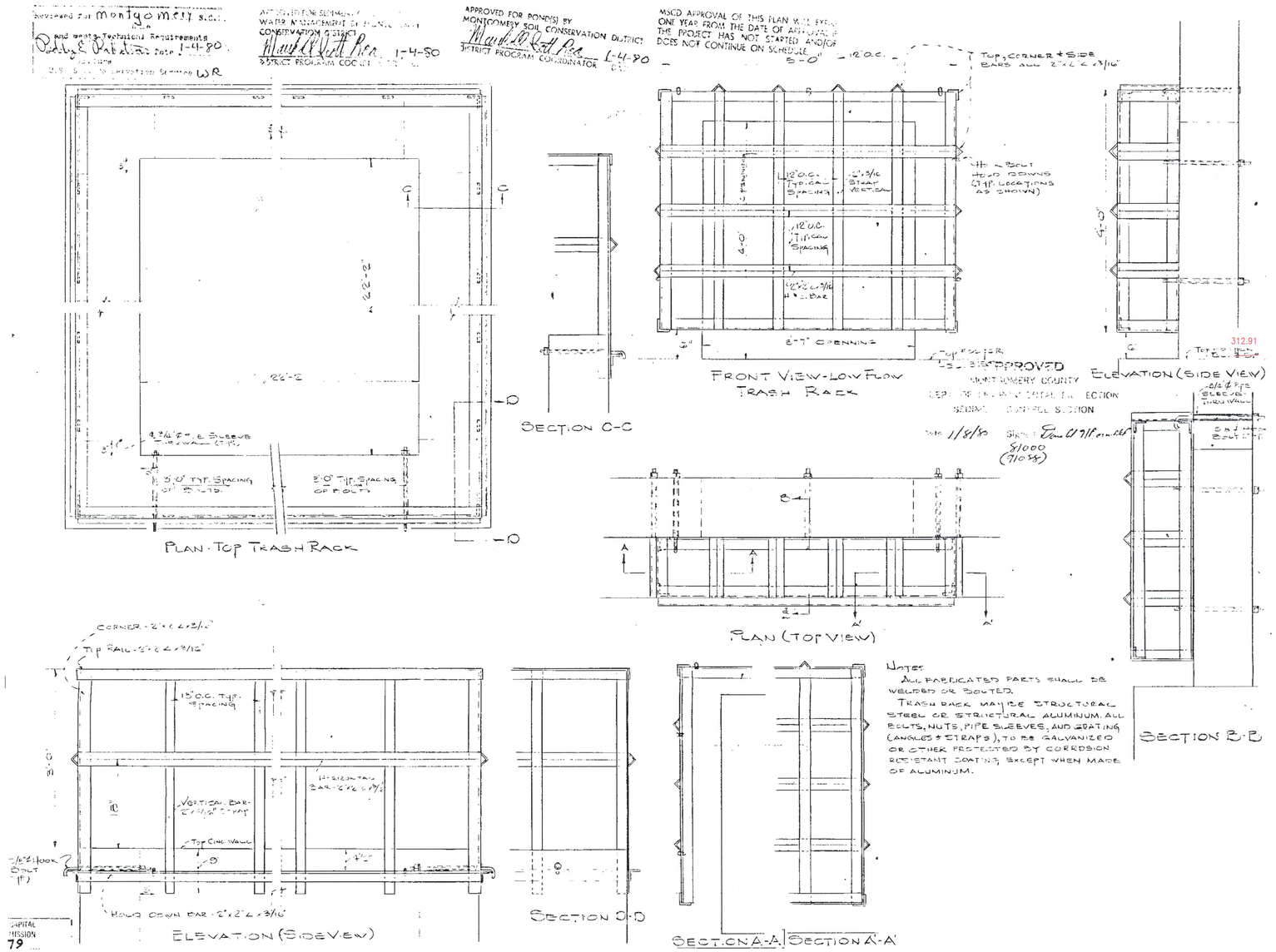

APPROVED
MONTGOMERY COUNTY
DEPT. OF ENVIRONMENTAL PROTECTION
SEDIMENT CONTROL SECTION
DATE 1/8/80
$1000
(910 SS)

Notes
All fabricated parts shall be welded or bolted.
Trash rack may be structural steel or structural aluminum. All bolts, nuts, pipe sleeves, and grating (angles & straps), to be galvanized or other protected by corrosion resistant coating, except when made of aluminum.

NOTE:
1. 2' CONTOURS OBTAINED FROM FIELD RUN SURVEY CONDUCTED BY CPJ.
2. 5' CONTOURS OBTAINED FROM GIS DATA PROVIDED BY MONTGOMERY COUNTY, MARYLAND AND M-NCPPC.
3. THIS PLAN REPRESENTS THE EXISTING FIELD SURVEY DETAIL OVERLAYED ONTO THE ORIGINAL DESIGN PLANS. THE VERTICAL DATUM OF THE SURVEY DATA IS APPROXIMATELY TWO (2) VERTICAL FEET LOWER THAN THAT OF THE DESIGN PLAN

GRAPHIC SCALE
1 0 0.5 1 2
SCALE: 1" = 1'

THE MARYLAND-NATIONAL CAPITAL PARK AND PLANNING COMMISSION, DEPARTMENT OF PARK AND PLANNING

M-NCPPC RECORD FILE NO. _____
REVIEWED BY _____
APPROVED BY _____
CHIEF, CONSTRUCTION SECTION
DATE APPROVED _____

THIS IS NOT A PERMIT TO BEGIN CONSTRUCTION

This approval is for technical review only. For permit For permit information, contact Jay Childs, Construction Supervisor at (301)495-2574.

M.C.D.P.S. APPROVED FOR:

Stormwater Management:
Reviewed Date
Approved Date
N/A
S.M.File No.

Sediment Control Technical Requirements:
Reviewed Date
Approved Date

Administrative Requirements:
Reviewed Date
232507
SEDIMENT CONTROL PERMIT No.

NOTE
MCDPS APPROVAL OF THIS PLAN WILL EXPIRE ONE YEAR FROM THE DATE OF APPROVAL IF THE PROJECT HAS NOT STARTED UNLESS THE PERMIT HAS BEEN EXTENDED.

THIS APPROVAL DOES NOT NEGATE THE NEED OF A MCDPS ACCESS PERMIT.

STORMWATER MANAGEMENT POND MAINTENANCE SEQUENCE NO. 826 EXISTING CONDITIONS PLAN DETAILS

PUEBLO ROAD

GAITHERSBURG (9th) ELECTION DISTRICT
MONTGOMERY COUNTY, MARYLAND

CPJ Associates
Charles P. Johnson & Associates, Inc.
Civil and Environmental Engineers • Planners • Landscape Architects • Surveyors
1751 Elton Rd., Ste. 300 Silver Spring, MD 20903 301.434.7000 Fax: 301.434.9594
www.cpja.com • Gaithersburg, MD • Frederick, MD • Stevensville, MD • Fairfax, VA

STATE OF MARYLAND BRIAN KEITH DAVIS 19908 PROFESSIONAL ENGINEER

PROFESSIONAL CERTIFICATION
I HEREBY CERTIFY THAT THESE DOCUMENTS WERE PREPARED OR APPROVED BY ME, AND THAT I AM A DULY LICENSED PROFESSIONAL ENGINEER UNDER THE LAWS OF THE STATE OF MARYLAND.
LICENSE # 19908
EXPIRATION DATE: 01/06/2017

CLIENT: Montgomery County
Department of Environmental Protection
255 Rockville Pike, Suite 120
Rockville, Maryland 20850-4166
Phone: (240) 777-7723
Contact: Mr. Gene Gopenko

COPYRIGHT © LATEST DATE HEREON
CHARLES P. JOHNSON & ASSOCIATES, INC.
ALL RIGHTS RESERVED, UNAUTHORIZED USE OR REPRODUCTION IS PROHIBITED.

PRELIMINARY PLAN NO: N/A	SITE PLAN NO: N/A
DESIGN JBB	SHEET 6 OF 24
DRAFT GC	
DATE APRIL, 2016	FILE NO: 36-188-24.02B
SCALE AS SHOWN	

MISS UTILITY

The Contractor shall call "Miss Utility" at 1-800-257-7777, 48 hours prior to the start of work. The Contractor is responsible for ensuring that all underground utilities in the area of proposed work are located prior to commencing construction work. The Contractor is responsible for compliance with requirements of Chapter 36A of the Montgomery County Code.

The contractor is also responsible for locating all private utilities (not located by Miss Utility) within M-NCPPC property at their expense. All utilities shown on the plans are provided for information only and shall be considered approximate. M-NCPPC shall not be responsible for locating underground utilities. Any utilities or other underground facilities damaged during construction shall be repaired/replaced at the Contractor's sole expense.

CAPITAL
MISSION
79

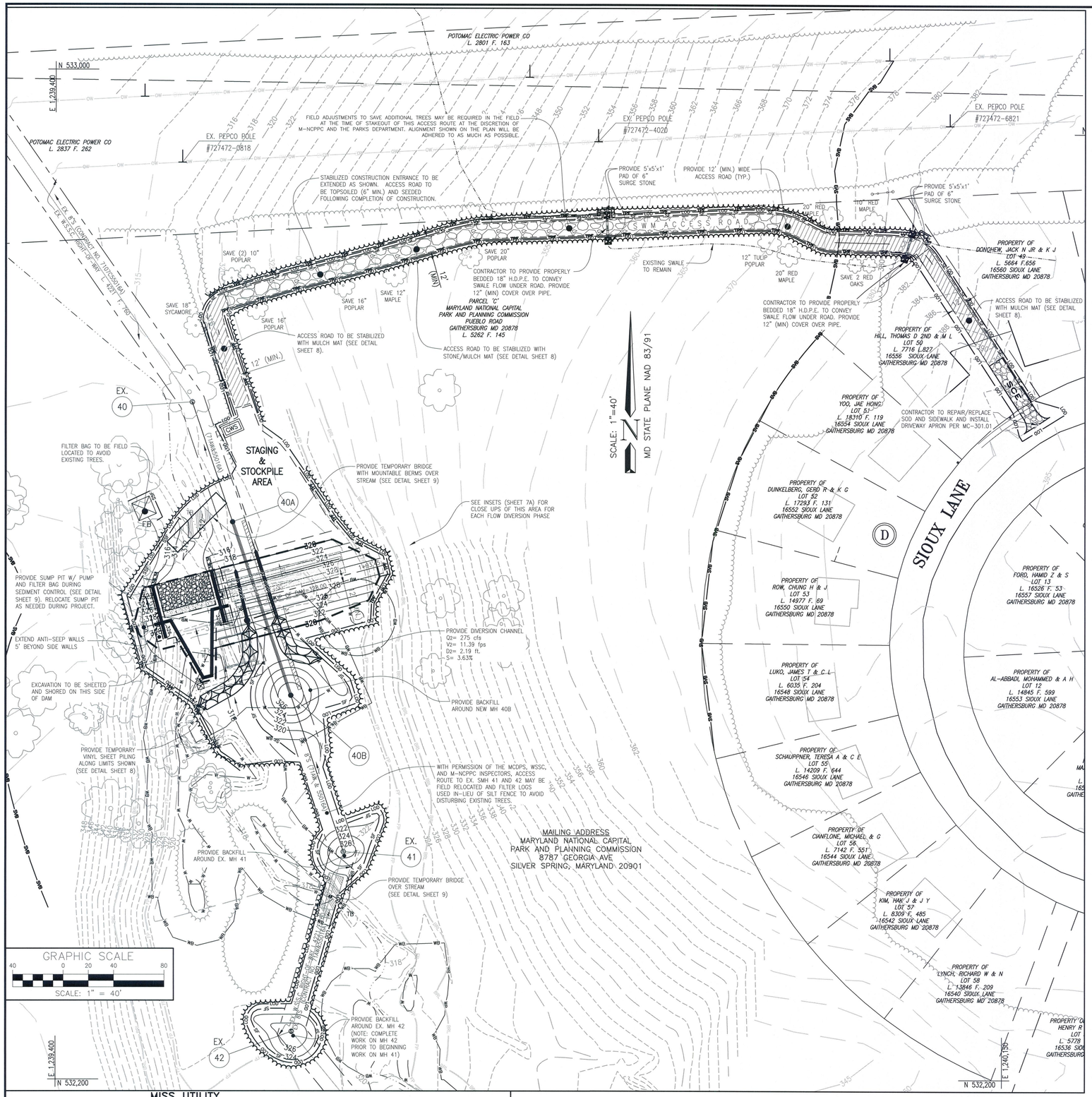

MISS UTILITY

THE CONTRACTOR SHALL CALL "MISS UTILITY" AT 1-800-257-7777 48 HOURS PRIOR TO THE START OF WORK. THE CONTRACTOR IS RESPONSIBLE FOR ENSURING THAT ALL UNDERGROUND UTILITIES IN THE AREA OF PROPOSED WORK ARE LOCATED PRIOR O COMMENCING CONSTRUCTION WORK. THE CONTRACTOR IS RESPONSIBLE FOR COMPLIANCE WITH THE REQUIREMENTS OF CHAPTER 36A OF THE MONTGOMERY COUNTY CODE.

THE CONTRACTOR IS ALSO RESPONSIBLE FOR LOCATING ALL PRIVATE UTILITIES (NOT LOCATED BY MISS UTILITY) WITHIN M-NCPPC PROPERTY AT THEIR EXPENSE. ALL UTILITIES SHOWN ON THE PLANS ARE PROVIDED FOR INFORMATION ONLY AND SHALL BE CONSIDERED APPROXIMATE. M-NCPPC SHALL NOT BE RESPONSIBLE FOR LOCATING UNDERGROUND UTILITIES. ANY UTILITIES OR OTHER UNDERGROUND FACILITIES DAMAGED DURING CONSTRUCTION SHALL BE REPAIRED/REPLACED AT THE CONTRACTOR'S SOLE EXPENSE.

FOR SEDIMENT CONTROL ONLY

TOTAL DISTURBED AREA=1.28Ac.

THE MARYLAND-NATIONAL CAPITAL PARK AND PLANNING COMMISSION, DEPARTMENT OF PARK AND PLANNING

M-NCPPC RECORD FILE NO. _____

REVIEWED BY _____

APPROVED BY _____
CHIEF, CONSTRUCTION SECTION

DATE APPROVED _____

THIS IS NOT A PERMIT TO BEGIN CONSTRUCTION

THIS APPROVAL IS FOR TECHNICAL REVIEW ONLY. FOR PERMIT FOR PERMIT INFORMATION, CONTACT JAY CHILDS, CONSTRUCTION SUPERVISOR AT (301) 495-2574.

STATE OF MARYLAND
BRIAN KEITH DAVIS
19905
PROFESSIONAL ENGINEER

PROFESSIONAL CERTIFICATION
I HEREBY CERTIFY THAT THESE DOCUMENTS WERE PREPARED OR APPROVED BY ME, AND THAT I AM A DULY LICENSED PROFESSIONAL ENGINEER UNDER THE LAWS OF THE STATE OF MARYLAND.

LICENSE # 19905

EXPIRATION DATE: 01/06/2017

M.C.D.P.S. APPROVED FOR:

Stormwater Management:

Reviewed Date

Approved Date

N/A
S.M.File No.

Sediment Control Technical Requirements:

Reviewed Date

Approved Date

Administrative Requirements:

Reviewed Date

232507
SEDIMENT CONTROL PERMIT No.

NOTE

MCDPS APPROVAL OF THIS PLAN WILL EXPIRE ONE YEAR FROM THE DATE OF APPROVAL IF THE PROJECT HAS NOT STARTED UNLESS THE PERMIT HAS BEEN EXTENDED.

THIS APPROVAL DOES NOT NEGATE THE NEED OF A MCDPS ACCESS PERMIT.

STORMWATER MANAGEMENT
POND MAINTENANCE
SEQUENCE NO. 826
SEDIMENT CONTROL PLAN

PUEBLO ROAD

GAITHERSBURG (9th) ELECTION DISTRICT
MONTGOMERY COUNTY, MARYLAND

CPJ Associates

Charles P. Johnson & Associates, Inc.

Civil and Environmental Engineers • Planners • Landscape Architects • Surveyors

1751 Elton Rd., Ste. 300 Silver Spring, MD 20903 301.434.7000 Fax: 301.434.9394

www.cpja.com • Gaithersburg, MD • Frederick, MD • Stevensville, MD • Fairfax, VA

CLIENT: Montgomery County
Department of Environmental Protection
255 Rockville Pike, Suite 120
Rockville, Maryland 20850-4166
Phone: (240) 777-7723
Contact: Mr. Gene Gopenko

COPYRIGHT © LATEST DATE HEREON
CHARLES P. JOHNSON & ASSOCIATES, INC.
ALL RIGHTS RESERVED, UNAUTHORIZED USE OR REPRODUCTION IS PROHIBITED.

PRELIMINARY PLAN NO: N/A	SITE PLAN NO: N/A
DESIGN JBB	SHEET 7 OF 24
DRAFT GC	
DATE APRIL, 2016	
SCALE 1"/40'	FILE NO: 36-188-24.02B

Attached Xrefs: TB24x36/08-563-02/GIS Topo-565/46-01/20-03

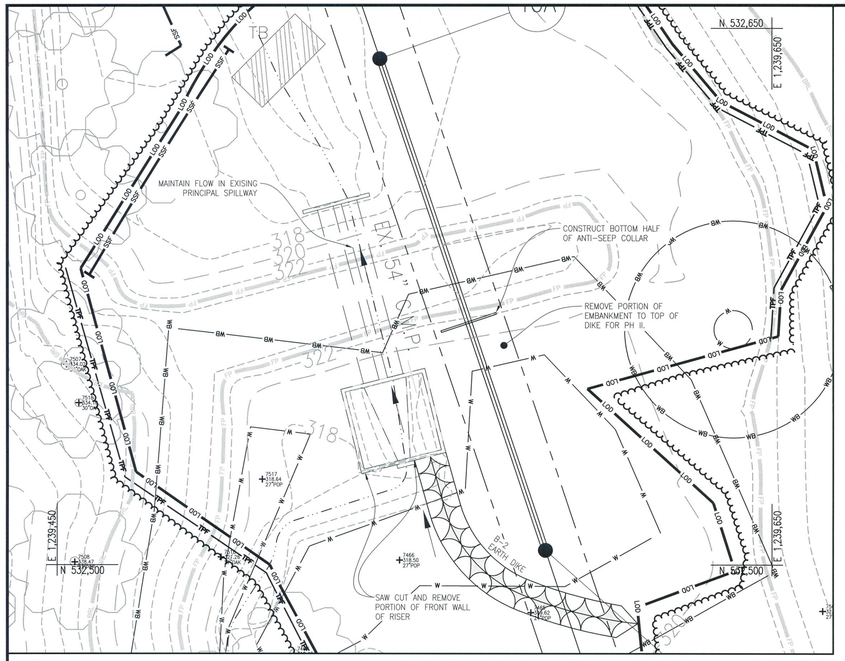

FLOW DIVERSION–PHASE I

SCALE: 1"=20'

GRAPHIC SCALE 20 0 10 20 40

SCALE: 1" = 20'

- MAINTAIN FLOW THRU EXISTING PRINCIPAL SPILLWAY.
- REMOVE EASTERN PORTION OF EMBANKMENT.
- EXCAVATE TRENCH AT EX. SEWER & ABANDON / INSTALL NEW SEWER PIPE, MANHOLES, AND BOTTOM PORTION OF ANTI-SEEP. COLLAR.

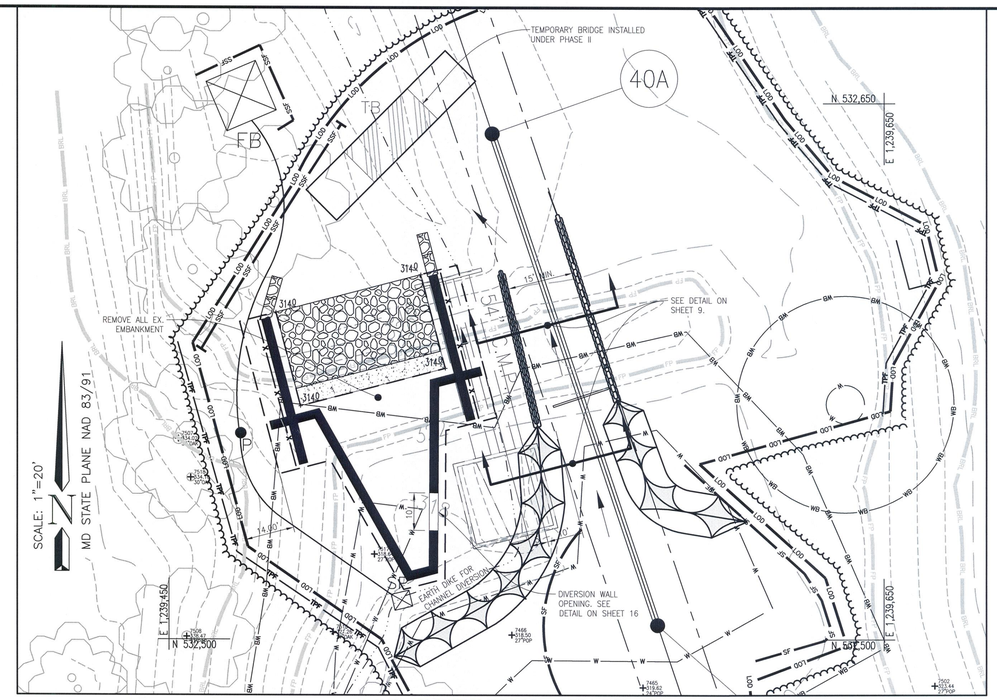

GRAPHIC SCALE 20 0 10 20 40

SCALE: 1" = 20'

FLOW DIVERSION–PHASE II

SCALE: 1"=20'

- DEMOLISH EX. PRINCIPAL SPILLWAY.
- CONSTRUCT DIVERSION CHANNEL OVER TOP OF NEW SEWER.
- INSTALL TEMPORARY BRIDGE.
- REMOVE EXISTING EMBANKMENT.
- CONSTRUCT CONCRETE SPILLWAY - LEAVE 10' SECTION.

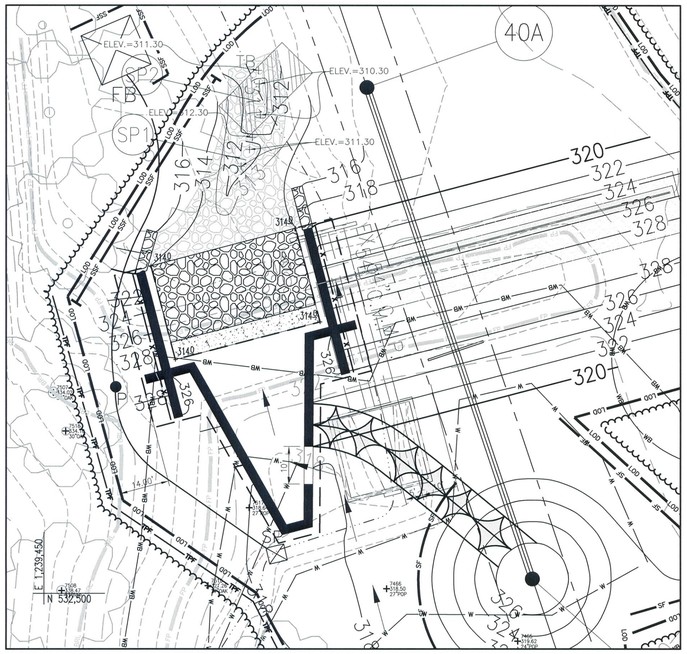

FLOW DIVERSION–PHASE III

SCALE: 1"=20'

GRAPHIC SCALE 20 0 10 20 40

SCALE: 1" = 20'

- REDIRECT FLOW THRU OPENING IN WEIR WALL.
- COMPLETE ANTI-SEEP COLLAR.
- BACKFILL AND CONSTRUCT ALL EMBANKMENTS.

M.C.D.P.S. APPROVED FOR:

Stormwater Management:

Reviewed Date

Approved Date

N/A
S.M.File No.

Sediment Control Technical Requirements:

Reviewed Date

Approved Date

Administrative Requirements:

Reviewed Date

232507
SEDIMENT CONTROL PERMIT No.

NOTE

MCDPS APPROVAL OF THIS PLAN WILL EXPIRE ONE YEAR FROM THE DATE OF APPROVAL IF THE PROJECT HAS NOT STARTED UNLESS THE PERMIT HAS BEEN EXTENDED.

THIS APPROVAL DOES NOT NEGATE THE NEED OF A MCDPS ACCESS PERMIT.

FOR SEDIMENT CONTROL ONLY

TOTAL DISTURBED AREA=1.28Ac.

THE MARYLAND–NATIONAL CAPITAL PARK AND PLANNING COMMISSION, DEPARTMENT OF PARK AND PLANNING

M–NCPPC RECORD FILE NO. _____

REVIEWED BY _____

APPROVED BY _____
CHIEF, CONSTRUCTION SECTION

DATE APPROVED _____

THIS IS NOT A PERMIT TO BEGIN CONSTRUCTION

THIS APPROVAL IS FOR TECHNICAL REVIEW ONLY. FOR PERMIT FOR PERMIT INFORMATION, CONTACT JAY CHILDS, CONSTRUCTION SUPERVISOR AT (301) 495–2574.

STATE OF MARYLAND BRIAN KEITH DAVIS 19908 PROFESSIONAL ENGINEER

PROFESSIONAL CERTIFICATION
I HEREBY CERTIFY THAT THESE DOCUMENTS WERE PREPARED OR APPROVED BY ME, AND THAT I AM A DULY LICENSED PROFESSIONAL ENGINEER UNDER THE LAWS OF THE STATE OF MARYLAND.

LICENSE # 19908

EXPIRATION DATE: 01/06/2017

MISS UTILITY

THE CONTRACTOR SHALL CALL "MISS UTILITY" AT 1–800–257–7777 48 HOURS PRIOR TO THE START OF WORK. THE CONTRACTOR IS RESPONSIBLE FOR ENSURING THAT ALL UNDERGROUND UTILITIES IN THE AREA OF PROPOSED WORK ARE LOCATED PRIOR O COMMENCING CONSTRUCTION WORK. THE CONTRACTOR IS RESPONSIBLE FOR COMPLIANCE WITH THE REQUIREMENTS OF CHAPTER 36A OF THE MONTGOMERY COUNTY CODE.

THE CONTRACTOR IS ALSO RESPONSIBLE FOR LOCATING ALL PRIVATE UTILITIES (NOT LOCATED BY MISS UTILITY) WITHIN M–NCPPC PROPERTY AT THEIR EXPENSE. ALL UTILITIES SHOWN ON THE PLANS ARE PROVIDED FOR INFORMATION ONLY AND SHALL BE CONSIDERED APPROXIMATE. M–NCPPC SHALL NOT BE RESPONSIBLE FOR LOCATING UNDERGROUND UTILITIES. ANY UTILTIES OR OTHER UNDERGROUND FACILITIES DAMAGED DURING CONSTRUCTION SHALL BE REPAIRED/REPLACED AT THE CONTRACTOR'S SOLE EXPENSE.

STORMWATER MANAGEMENT
POND MAINTENANCE
SEQUENCE NO. 826
SEDIMENT CONTROL PLAN

PUEBLO ROAD

GAITHERSBURG (9th) ELECTION DISTRICT
MONTGOMERY COUNTY, MARYLAND

CPJ Associates
Charles P. Johnson & Associates, Inc.
Civil and Environmental Engineers • Planners • Landscape Architects • Surveyors
1751 Elton Rd., Ste. 300 Silver Spring, MD 20903 301.434.7000 Fax: 301.434.9394
www.cpja.com • Gaithersburg, MD • Frederick, MD • Stevensville, MD • Fairfax, VA

CLIENT: Montgomery County
Department of Environmental Protection
255 Rockville Pike, Suite 120
Rockville, Maryland 20850-4166
Phone: (240) 777-7723
Contact: Mr. Gene Gopenko

PRELIMINARY PLAN NO: N/A	SITE PLAN NO: N/A
DESIGN JBB	SHEET 7A OF 24
DRAFT GC	
DATE APRIL, 2016	FILE NO: 36-188-24.02B
SCALE 1"/40'	

COPYRIGHT © LATEST DATE HEREON
CHARLES P. JOHNSON & ASSOCIATES, INC.
ALL RIGHTS RESERVED, UNAUTHORIZED USE OR REPRODUCTION IS PROHIBITED.

Attached Xrefs: TB24x36/08-565-02/GIS Topo-565/46-01/20-03

Department of Permitting Services
Land Development Division
255 Rockville Pike, 2nd Floor
Rockville, MD 20850-4166
Phone: 311 in Montgomery County or (240)-777-0311
Fax (240)-777-6339
http://www.montgomerycountymd.gov/permittingservices/

DPS

STANDARD EROSION AND SEDIMENT CONTROL NOTES

1. The permittee shall notify the Department of Permitting Services (DPS) forty-eight (48) hours before commencing any land disturbing activity and, unless waived by the Department, shall be required to hold a pre-construction meeting between them or their representative, their engineer and an authorized representative of the Department.

2. The permittee must obtain inspection and approval by DPS at the following points:

   A. At the required pre-construction meeting.

   B. Following installation of sediment control measures and prior to any other land disturbing activity.

   C. During the installation of a sediment basin or stormwater management structure at the required inspection points (see Inspection Checklist on plan). Notification prior to commencing construction is mandatory.

   D. Prior to removal or modification of any sediment control structure(s).

   E. Prior to final acceptance.

3. The permittee shall construct all erosion and sediment control measures per the approved plan and construction sequence, shall have them inspected and approved by the Department prior to beginning any other land disturbances, shall ensure that all runoff from disturbed areas is directed to the sediment control devices, and shall not remove any erosion or sediment control measure without prior permission from the Department.

4. The permittee shall protect all points of construction ingress and egress to prevent the deposition of materials onto traversed public thoroughfare(s). All materials deposited onto public thoroughfare(s) shall be removed immediately.

5. The permittee shall inspect periodically and maintain continuously in effective operating condition, all erosion and sediment control measures until such time as they are removed with prior permission from the Department. The permittee is responsible for immediately repairing or replacing any sediment control measures which have been damaged or removed by the permittee or any other person.

6. Following initial soil disturbance or re-disturbance, permanent or temporary stabilization must be completed within:

   a) Three (3) calendar days as to the surface of all perimeter dikes, swales, ditches, perimeter slopes and all slopes steeper than 3 horizontal to 1 vertical (3:1); and

   b) Seven (7) calendar days as to all other disturbed or graded areas on the project site not under active grading.

   All areas disturbed outside of the perimeter sediment control system must be minimized and stabilized immediately. Maintenance must be performed as necessary to ensure continued stabilization.

7. The permittee shall apply sod, seed, and anchored straw mulch, or other approved stabilization measures to all disturbed areas within seven (7) calendar days after stripping and grading activities have ceased on that area. Maintenance shall be performed as necessary to ensure continued stabilization. Active construction areas such as borrow or stockpile areas, roadway improvements, and areas within fifty (50) feet of a building under construction may be exempt from this requirement, provided that erosion and sediment control measures are installed and maintained to protect those areas.

8. Prior to removal of sediment control measures, the permittee shall stabilize all contributory disturbed areas with required soil amendments and topsoil, using sod or an approved permanent seed mixture and an approved anchored mulch. Wood fiber mulch may only be used in seeding season when the slope does not exceed 10% and grading has been done to promote sheet flow drainage. Areas brought to finished grade during the seeding season shall be permanently stabilized within seven (7) calendar days of establishment. When property is brought to finished grade during the months of November through February, and permanent stabilization is found to be impractical, an approved temporary seed and straw anchored mulch shall be applied to disturbed areas. The final permanent stabilization of such property shall be completed prior to the following April 15.

9. The site permit, work, materials, approved SC/SM plans, and test reports shall be available at the site for inspection by duly authorized officials of Montgomery County.

10. Surface drainage flows over unstabilized cut and fill slopes shall be controlled by either preventing drainage flows from traversing the slopes or by installing mechanical devices to lower the water down slope without causing erosion. Dikes shall be installed and maintained at the top of cut or fill slopes until the slope and drainage area to it are fully stabilized, at which time they must be removed and final grading done to promote sheet flow drainage. Mechanical devices must be provided at points of concentrated flow where erosion is likely to occur.

11. Permanent swales or other points of concentrated water flow shall be stabilized within 3 calendar days of establishment with sod or seed with an approved erosion control matting or by other approved stabilization measures.

12. Sediment control devices shall be removed, with permission of the Department, within thirty (30) calendar days following establishment of permanent stabilization in all contributory drainage areas. Stormwater management structures used temporarily for sediment control shall be converted to the permanent configuration within this time period as well.

13. No permanent cut or fill slope with a gradient steeper than 3:1 will be permitted in lawn maintenance areas or on residential lots. A slope gradient of up to 2:1 will be permitted in non-maintenance areas provided that those areas are indicated on the erosion and sediment control plan with a low-maintenance ground cover specified for permanent stabilization. Slope gradient steeper than 2:1 will not be permitted with vegetative stabilization.

14. The permittee shall install a splashblock at the bottom of each downspout unless the downspout is connected by a drain line to an acceptable outlet.

15. For finished grading, the permittee shall provide adequate gradients so as to prevent water from standing on the surface of lawns more than twenty-four (24) hours after the end of a rainfall, except in designated drainage courses and swale flow areas, which may drain as long as forty-eight (48) hours after the end of a rainfall.

16. Sediment traps or basins are not permitted within 20 feet of a building which is existing or under construction. No building may be constructed within 20 feet of a sediment trap or basin.

17. All inlets in non-sump areas shall have asphalt berms installed at the time of base paving establishment.

18. The sediment control inspector has the option of requiring additional sediment control measures, as deemed necessary.

19. All trap elevations are relative to the outlet elevation, which must be on existing undisturbed ground.

20. Vegetative stabilization shall be performed in accordance with the Standards and Specifications for Soil Erosion and Sediment Control.

21. Sediment trap(s)/basin(s) shall be cleaned out and restored to the original dimensions when sediment has accumulated to the point of one-half (1/2) the wet storage depth of the trap/basin (1/4 the wet storage depth for ST-III) or when required by the sediment control inspector.

22. Sediment removed from traps/basins shall be placed and stabilized in approved areas, but not within a floodplain.

23. All sediment basins and traps must be surrounded with a welded wire safety fence. The fence must be at least 42 inches high, have posts spaced no farther apart than 8 feet, have mesh openings no greater the two inches in width and four inches in height, with a minimum of 14 gauge wire. Safety fence must be maintained in good condition at all times.

24. No excavation in the areas of existing utilities is permitted unless their location has been determined. Call "Miss Utility" at 1-800-257-7777, 48 hours prior to the start of work.

25. Off-site spoil or borrow areas must have prior approval by DPS.

26. Sediment trap/basin dewatering for cleanout or repair may only be done with the DPS inspector's permission. The inspector must approve the dewatering method for each application. The following methods may be considered:

   A. Pump discharge may be directed to another on-site sediment trap or basin, provided it is of sufficient volume and the pump intake is floated to prevent agitation or suction of deposited sediments; or

   B. the pump intake may utilize a Removable Pumping Station and must discharge into an undisturbed area through a non-erosive outlet; or

   C. the pump intake may be floated and discharge into a Dirt Bag (12 oz. non-woven fabric), or approved equivalent, located in an undisturbed buffer area.

Remember: Dewatering operation and method must have prior approval by the DPS inspector.

27. The permittee must notify the Department of all utility construction activities within the permitted limits of disturbance prior to the commencement of those activities.

28. Topsoil must be applied to all pervious areas within the limits of disturbance prior to permanent stabilization in accordance with MDE "Standards and Specifications for Soil Preparation, Topsoiling, and Soil Amendments".

B-4-5 STANDARDS AND SPECIFICATIONS FOR PERMANENT STABILIZATION

Definition
To stabilize disturbed soils with permanent vegetation.

Purpose
To use long-lived perennial grasses and legumes to establish permanent ground cover on disturbed soils.

Conditions Where Practice Applies
Exposed soils where ground cover is needed for 6 months or more.

Criteria
A. Seed Mixtures
1. General Use
Note: all seed must be certified seed and tagged as such. Contractor to submit a certification of seed mix to MNCPPC for approval prior to seeding operations.
i. Select one or more of the species or mixtures listed in Table B.3 for the appropriate Plant Hardiness Zone (from Figure B.3) and based on the site condition or purpose found on Table B.2. Enter selected mixture(s), application rates, and seeding dates in the Permanent Seeding Summary. The Summary is to be placed on the plan.
ii. Additional planting specifications for exceptional sites such as shorelines, stream banks, or dunes or for special purposes such as wildlife or aesthetic treatment may be found in
iii. USDA-NRCS Technical Field Office Guide, Section 342 - Critical Area Planting.
iv. For sites having disturbed area over 5 acres, use and show the rates recommended by the soil testing agency.
v. For areas receiving low maintenance, apply urea form fertilizer (46-0-0) at 3 ½ pounds per 1000 square feet (150 pounds per acre) at the time of seeding in addition to the soil amendments shown in the Permanent Seeding Summary .
2. Turfgrass Mixtures
i. Areas where turfgrass may be desired include lawns, parks, playgrounds, and commercial sites which will receive a medium to high level of maintenance.
ii. Select one or more of the species or mixtures listed below based on the site conditions or purpose. Enter selected mixture(s), application rates, and seeding dates in the Permanent Seeding Summary. The summary is to be placed on the plan.
1. Kentucky Bluegrass: Full Sun Mixture: For use in areas that receive intensive management. Irrigation required in the areas of central Maryland and Eastern Shore. Recommended Certified Kentucky Bluegrass Cultivars Seeding Rate: 1.5 to 2.0 pounds per 1000 square feet. Choose a minimum of three Kentucky bluegrass cultivars with each ranging from 10 to 35 percent of the total mixture by weight.
2. Kentucky Bluegrass/Perennial Rye: Full Sun Mixture: For use in full sun areas where B.22 rapid establishment is necessary and when turf will receive medium to intensive management. Certified Perennial Ryegrass Cultivars/Certified Kentucky Bluegrass Seeding Rate: 2 pounds mixture per 1000 square feet. Choose a minimum of three Kentucky bluegrass cultivars with each ranging from 10 to 35 percent of the total mixture by weight.
3. Tall Fescue/Kentucky Bluegrass: Full Sun Mixture: For use in drought prone areas and/or for areas receiving low to medium management in full sun to medium shade. Recommended mixture includes; Certified Tall Fescue Cultivars 95 to 100 percent, Certified Kentucky Bluegrass Cultivars 0 to 5 percent. Seeding Rate: 5 to 8 pounds per 1000 square feet. One or more cultivars may be blended.
4. Kentucky Bluegrass/Fine Fescue: Shade Mixture: For use in areas with shade in Bluegrass lawns. For establishment in high quality, intensively managed turf area. Mixture includes; Certified Kentucky Bluegrass Cultivars 30 to 40 percent and Certified Fine Fescue and 60 to 70 percent. Seeding Rate: 1½ to 3 pounds per 1000 square feet.

Notes:
Select turfgrass varieties from those listed in the most current University of Maryland Publication, Agronomy Memo #77, "Turfgrass Cultivar Recommendations for Maryland"

Choose certified material. Certified material is the best guarantee of cultivar purity. The certification program of the Maryland Department of Agriculture, Turf and Seed Section, provides a reliable means of consumer protection and assures a pure genetic line

iii. Ideal Times of Seeding for Turf Grass Mixtures

- Western MD: March 15 to May 15, August 15 to October 15 (Hardiness Zones: 5b, 6a)
- Central MD: March 1 to May 15, August 15 to October 15 (Hardiness Zone: 6b)
- Southern MD, Eastern Shore: March 1 to May 15, August 15 to October 15 (Hardiness Zones: 7a, 7b)

iv. Till areas to receive seed by disking or other approved methods to a depth of 2 to 4 inches, level and rake the areas to prepare a proper seedbed. Remove stones and debris over 1½ inches in diameter. The resulting seedbed must be in such condition that future mowing of grasses will pose no difficulty.
v. If soil moisture is deficient, supply new seedings with adequate water for plant growth (½ to 1 inch every 3 to 4 days depending on soil texture) until they are firmly established. This is especially true when seedings are made late in the planting season, in abnormally dry or hot seasons, or on adverse sites.

Permanent Seeding Summary *See sheet 13 for Wetlands Seed Mix*

Hardiness Zone (from Figure B.3)				6B				
Seed Mixture (from Table B.3)				N/A				
No.	Species	Application Rate (lb/ac)	Seeding Dates	Seeding Depths	N	P_2O_5	K_2O	Lime Rate
1	Kentucky Blue	30	See Above	¼"	45 pounds per acre (1.0lb / 1000sf)	90 pounds per acre (2lb / 1000sf)	90 pounds per acre (2lb / 1000sf)	2 tons per acre (90lb / 1000sf)
2	Perennial Rye	60	See Above	¼"				
3	Turf Tall Fescue	210	See Above	¼"				

Sod: To provide quick cover on disturbed areas (2:1 grade or flatter).
1. General Specifications
i. Sod shall be state "approved sod" inspected and approved by Maryland Department of Agriculture.
ii. Sod must be machine cut at a uniform soil thickness of ¾ inch, plus or minus ¼ inch, at the time of cutting. Measurement for thickness must exclude top growth and thatch. Broken pads and torn or uneven ends will not be acceptable.
iii. Standard size sections of sod must be strong enough to support their own weight and retain their size and shape when suspended vertically with a firm grasp on the upper 10 percent of the section.
iv. Sod must not be harvested or transplanted when moisture content (excessively dry or wet) may adversely affect its survival.
v. Sod must be harvested, delivered, and installed within a period of 36 hours. Sod not transplanted within this period must be approved by an agronomist or soil scientist prior to its installation.
vi. Sod shall be a blend of 90% of three turf type tall fescues and 10% (min) Kentucky Bluegrass.
2. Sod Installation
i. During periods of excessively high temperature or in areas having dry subsoil, lightly irrigate the subsoil immediately prior to laying the sod.
ii. Lay the first row of sod in a straight line with subsequent rows placed parallel to it and tightly wedged against each other. Stagger lateral joints to promote more uniform growth and strength. Ensure that sod is not stretched or overlapped and that all joints are butted tight in order to prevent voids which would cause air drying of the roots.
iii. Wherever possible, lay sod with the long edges parallel to the contour and with staggering joints. Roll and tamp, peg or otherwise secure the sod to prevent slippage on slopes. Ensure solid contact exists between sod roots and the underlying soil surface.
iv. Water the sod immediately following rolling and tamping until the underside of the new sod pad and soil surface below the sod are thoroughly wet. Complete the operations of laying, tamping and irrigating for any piece of sod within eight hours.
3. Sod Maintenance
i. In the absence of adequate rainfall, water daily during the first week or as often and sufficiently as necessary to maintain moist soil to a depth of 4 inches. Water sod during the heat of the day to prevent wilting.
ii. After the first week, sod watering is required as necessary to maintain adequate moisture content.
iii. Do not mow until the sod is firmly rooted. No more than ⅓ of the grass leaf must be removed by the initial cutting or subsequent cuttings. Maintain a grass height of at least 3 inches unless otherwise specified.

B-4-2 STANDARDS AND SPECIFICATIONS FOR SOIL PREPARATION, TOPSOILING, AND SOIL AMENDMENTS

Definition
The process of preparing the soils to sustain adequate vegetative stabilization.

Purpose
To provide a suitable soil medium for vegetative growth.

Conditions Where Practice Applies
Where vegetative stabilization is to be established.

Criteria
A. Soil Preparation
1. Temporary Stabilization
a. Seedbed preparation consists of loosening soil to a depth of 3 to 5 inches by means of suitable agricultural or construction equipment, such as disc harrows or chisel plows or rippers mounted on construction equipment. After the soil is loosened, it must not be rolled or dragged smooth but left in the roughened condition. Slopes 3:1 or flatter are to be tracked with ridges running parallel to the contour of the slope.
b. Apply fertilizer and lime as prescribed on the plans.
c. Incorporate lime and fertilizer into the top 3 to 5 inches of soil by disking or other suitable means.
2. Permanent Stabilization
a. A soil test is required for any earth disturbance of 5 acres or more. The minimum soil conditions required for permanent vegetative establishment are:
i. Soil pH between 6.0 and 7.0.
ii. Soluble salts less than 500 parts per million (ppm).
iii. Soil contains less than 40 percent clay but enough fine grained material (greater than 30 percent silt plus clay) to provide the capacity to hold a moderate amount of moisture. An exception: if lovegrass will be planted, then a sandy soil (less than 30 percent silt plus clay) would be acceptable.
iv. Soil contains 1.5 percent minimum organic matter by weight.
v. Soil contains sufficient pore space to permit adequate root penetration.
b. Application of amendments or topsoil is required if on-site soils do not meet the above conditions.
c. Graded areas must be maintained in a true and even grade as specified on the approved plan, then scarified or otherwise loosened to a depth of 3 to 5 inches.
d. Apply soil amendments as specified on the approved plan or as indicated by the results of a soil test.
e. Mix soil amendments into the top 3 to 5 inches of soil by disking or other suitable means. Rake lawn areas to smooth the surface, remove large objects like stones and branches, and ready the area for seed application. Loosen surface soil by dragging with a heavy chain or other equipment to roughen the surface where site conditions will not permit normal seedbed preparation. Track slopes 3:1 or flatter with tracked equipment leaving the soil in an irregular condition with ridges running parallel to the contour of the slope. Leave the top 1 to 3 inches of soil loose and friable. Seedbed loosening may be unnecessary on newly disturbed areas.

B. Topsoiling
1. Topsoil is placed over prepared subsoil prior to establishment of permanent vegetation. The purpose is to provide a suitable soil medium for vegetative growth. Soils of concern have low moisture content, low nutrient levels, low pH, materials toxic to plants, and/or unacceptable soil gradation.
2. Topsoil salvaged from an existing site may be used provided it meets the standards as set forth in these specifications. Typically, the depth of topsoil to be salvaged for a given soil type can be found in the representative soil profile section in the Soil Survey published by USDA-NRCS.
3. Topsoiling is limited to areas having 2:1 or flatter slopes where:
a. The texture of the exposed subsoil/parent material is not adequate to produce vegetative growth.
b. The soil material is so shallow that the rooting zone is not deep enough to support plants or furnish continuing supplies of moisture and plant nutrients.
c. The original soil to be vegetated contains material toxic to plant growth.
d. The soil is so acidic that treatment with limestone is not feasible.
4. Areas having slopes steeper than 2:1 require special consideration and design.
5. Topsoil Specifications: Soil to be used as topsoil must meet the following criteria:
a. Topsoil must be a loam, sandy loam, clay loam, silt loam, sandy clay loam, or loamy sand. Other soils may be used if recommended by an agronomist or soil scientist and approved by the appropriate approval authority. Topsoil must not be a mixture of contrasting textured subsoils and must contain less than 5 percent by volume of cinders, stones, slag, coarse fragments, gravel, sticks, roots, trash, or other materials larger than 1½ inches in diameter.
b. Topsoil must be free of noxious plants or plant parts such as Bermuda grass, quack grass, Johnson grass, nut sedge, poison ivy, thistle, or others as specified.
c. Topsoil substitutes or amendments, as recommended by a qualified agronomist or soil scientist and approved by the appropriate approval authority, may be used in lieu of natural topsoil.
6. Topsoil Application
a. Erosion and sediment control practices must be maintained when applying topsoil.
b. Uniformly distribute topsoil in a 5 to 8 inch layer and lightly compact to a minimum thickness of 4 inches. Spreading is to be performed in such a manner that sodding or seeding can proceed with a minimum of additional soil preparation and tillage. Any irregularities in the surface resulting from topsoiling or other operations must be corrected in order to prevent the formation of depressions or water pockets.
c. Topsoil must not be placed if the topsoil or subsoil is in a frozen or muddy condition, when the subsoil is excessively wet or in a condition that may otherwise be detrimental to proper grading and seedbed preparation.

C. Soil Amendments (Fertilizer and Lime Specifications)
1. Soil tests must be performed to determine the exact ratios and application rates for both lime and fertilizer on sites having disturbed areas of 5 acres or more. Soil analysis may be performed by a recognized private or commercial laboratory. Soil samples taken for engineering purposes may also be used for chemical analyses.
2. Fertilizers must be uniform in composition, free flowing and suitable for accurate application by appropriate equipment. Manure may be substituted for fertilizer with prior approval from the appropriate approval authority. Fertilizers must all be delivered to the site fully labeled according to the applicable laws and must bear the name, trade name or trademark and warranty of the producer.
3. Lime materials must be ground limestone (hydrated or burnt lime may be substituted except when hydroseeding) which contains at least 50 percent total oxides (calcium oxide plus magnesium oxide). Limestone must be ground to such fineness that at least 50 percent will pass through a #100 mesh sieve and 98 to 100 percent will pass through a #20 mesh sieve.
4. Lime and fertilizer are to be evenly distributed and incorporated into the top 3 to 5 inches of soil by disking or other suitable means.
5. Where the subsoil is either highly acidic or composed of heavy clays, spread ground limestone at the rate of 4 to 8 tons/acre (200-400 pounds per 1,000 square feet) prior to the placement of topsoil.

TEMPORARY SEEDING SPECIFICATIONS

A. All temporary seeded areas shall be mulched immediately after seeding. Mulch materials should be unweathered, unchopped, small grain straw spread at a rate of 1½ to 2 tons per acre. The mulch shall be anchored immediately after placement with asphalt, peg and twine, plastic nettings or by a mulch anchor tool.
B. Lime and fertilizer shall be required for temporary seeding in accordance with the following procedures:
1. Pulverized dolomitic limestone is to be applied at the rate of 46 lbs. per 1,000 sq. ft.
2. Fertilizer shall be 10-10-10 or equivalent and applied a the rate of 12 to 18 lbs. per 1,000 sq. ft.

Seeding Preparation:
The top layer of soil shall be loosened by discling or raking (shall be done on contour) at a depth of at least 3", before seeding occurs.

Seeding:
LIME: 50 lbs. of dolomitic limestone per 1,000 sq. ft.
FERTILIZER: 15 lbs. of 10-10-10 per 1,000 sq. ft.
SEED: Cereal Rye or Perennial Rye at 0.92 lbs. per 1,000 sq. ft. (Dates: February 1st - April 30th, or August 15th - November 1st), Millet at 0.92 lbs. per 1,000 sq. ft. (Dates: November 2nd - January 31st, mulch only)
Mulch: Same rate as above (Dates: November 2nd - January 31st, mulch only), planting depth: 1" to 2" for all of the above.

2602 Vinyl Sheet Piling

Description: This item provides for installation of vinyl sheet piling for use in check dams and other specialty structures.
References:
ASTM D-526 (1990) Impact Resistance of Plastics
ASTM D638 (1990) Tensile Properties of Plastics
ASTM D-790 (1990) Flexural Properties of Unreinforced Plastics
ASTM D4216 (1991) Rigid PVC and Related Plastic Building Products Compounds

Materials: Vinyl sheet piling must be manufactured from extruded polyvinyl chloride, ASTM D-4216, class 1-4013-13-0101 or class 1-40034-33-0000, meeting the following minimum requirements:
Wall thickness: .15 in.
Section Modulus: 6.0 in.3
Impact Strength (ASTM D-256): 15 ft. lbs/in.
Tensile Yield Strength (ASTM D-638): 6,300 psi
Tensile Elastic Modulus (ASTM D-638): 360,000 psi
Flexural Yield Strength (ASTM D-790): 8,500 psi
Flexural Modulus (ASTM D-790): 380,000 psi

The sheet piling must be manufactured with an interlocking feature for a continuous connection between adjacent panels.
Installation: CONTRACTOR TO PROVIDE P.E. DESIGNED SHEET PILE WALL TO CPJ FOR REVIEW & APPROVAL.

1. Installation: Piling must be installed in accordance with manufacturer's recommendations using a vibratory hammer, drop hammer, vibratory plate, jackhammer, or by trenching. The bottom portion of the pilings must be embedded in soil or backfilled with soil as indicated on the drawings. The remaining portion must be backfilled carefully with riprap and aggregate to avoid damage to the sheet piling.
2. Inspection: The Owner/Inspector must check the sheet piling to ensure that all joints are interlocked and free from damage. The Contractor must replace all damaged and unconnected pilings at no additional cost to the County.
3. Cutting off: Cut sheet piling using a saw as recommended by the manufacturer of the sheet piling to obtain a smooth edge free from damage.
4. Tolerance: Sheet piling must be placed within ½ inch of plumb in all directions. The level top portion of the sheet pile check dams must be cut so that no part of the cut edge deviates more that ¼ inch from a level line at the specified elevation.

Payment: Payment per Unit Price on the Schedule of Unit Prices will be full compensation for providing the vinyl sheet piling, installation, excavation, backfill, material, labor, equipment, tools, and all incidentals necessary to complete the work.

MISS UTILITY

THE CONTRACTOR SHALL CALL "MISS UTILITY" AT 1-800-257-7777 48 HOURS PRIOR TO THE START OF WORK. THE CONTRACTOR IS RESPONSIBLE FOR ENSURING THAT ALL UNDERGROUND UTILITIES IN THE AREA OF PROPOSED WORK ARE LOCATED PRIOR O COMMENCING CONSTRUCTION WORK. THE CONTRACTOR IS RESPONSIBLE FOR COMPLIANCE WITH THE REQUIREMENTS OF CHAPTER 36A OF THE MONTGOMERY COUNTY CODE.

THE CONTRACTOR IS ALSO RESPONSIBLE FOR LOCATING ALL PRIVATE UTILITIES (NOT LOCATED BY MISS UTILITY) WITHIN M-NCPPC PROPERTY AT THEIR EXPENSE. ALL UTILITIES SHOWN ON THE PLANS ARE PROVIDED FOR INFORMATION ONLY AND SHALL BE CONSIDERED APPROXIMATE. M-NCPPC SHALL NOT BE RESPONSIBLE FOR LOCATING UNDERGROUND UTILITIES. ANY UTILITIES OR OTHER UNDERGROUND FACILITIES DAMAGED DURING CONSTRUCTION SHALL BE REPAIRED/REPLACED AT THE CONTRACTOR'S SOLE EXPENSE.

DETAIL B-1 STABILIZED CONSTRUCTION ENTRANCE

STANDARD SYMBOL: SCE

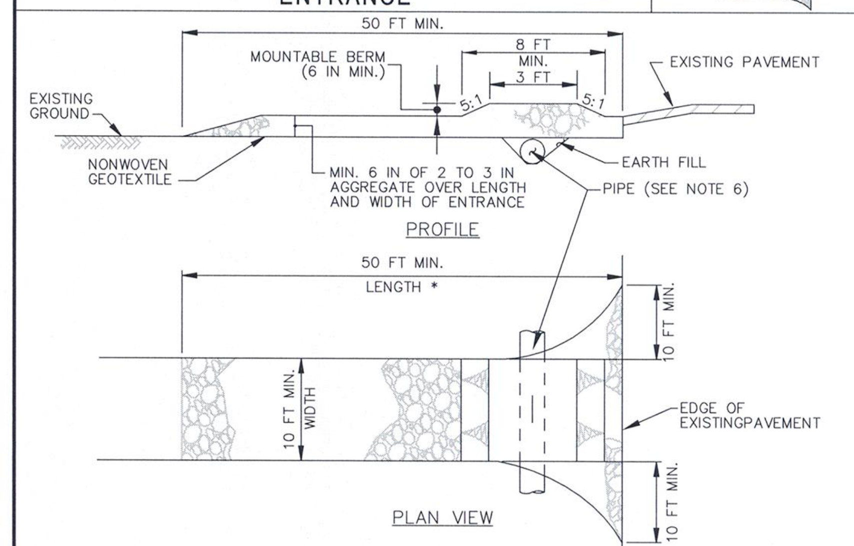

CONSTRUCTION SPECIFICATIONS

1. PLACE STABILIZED CONSTRUCTION ENTRANCE IN ACCORDANCE WITH THE APPROVED PLAN. VEHICLES MUST TRAVEL OVER THE ENTIRE LENGTH OF THE SCE. USE MINIMUM LENGTH OF 50 FEET (*30 FEET FOR SINGLE RESIDENCE LOT). USE MINIMUM WIDTH OF 10 FEET. FLARE SCE 10 FEET MINIMUM AT THE EXISTING ROAD TO PROVIDE A TURNING RADIUS.
2. PIPE ALL SURFACE WATER FLOWING TO OR DIVERTED TOWARD THE SCE UNDER THE ENTRANCE, MAINTAINING POSITIVE DRAINAGE. PROTECT PIPE INSTALLED THROUGH THE SCE WITH A MOUNTABLE BERM WITH 5:1 SLOPES AND A MINIMUM OF 12 INCHES OF STONE OVER THE PIPE. PROVIDE PIPE AS SPECIFIED ON APPROVED PLAN. WHEN THE SCE IS LOCATED AT A HIGH SPOT AND HAS NO DRAINAGE TO CONVEY, A PIPE IS NOT NECESSARY. A MOUNTABLE BERM IS REQUIRED WHEN SCE IS NOT LOCATED AT A HIGH SPOT.
3. PREPARE SUBGRADE AND PLACE NONWOVEN GEOTEXTILE, AS SPECIFIED IN SECTION H-1 MATERIALS.
4. PLACE CRUSHED AGGREGATE (2 TO 3 INCHES IN SIZE) OR EQUIVALENT RECYCLED CONCRETE (WITHOUT REBAR) AT LEAST 6 INCHES DEEP OVER THE LENGTH AND WIDTH OF THE SCE.
5. MAINTAIN ENTRANCE IN A CONDITION THAT MINIMIZES TRACKING OF SEDIMENT. ADD STONE OR MAKE OTHER REPAIRS AS CONDITIONS DEMAND TO MAINTAIN CLEAN SURFACE, MOUNTABLE BERM, AND SPECIFIED DIMENSIONS. IMMEDIATELY REMOVE STONE AND/OR SEDIMENT SPILLED, DROPPED, OR TRACKED ONTO ADJACENT ROADWAY BY VACUUMING, SCRAPING, AND/OR SWEEPING. WASHING ROADWAY TO REMOVE MUD TRACKED ONTO PAVEMENT IS NOT ACCEPTABLE UNLESS WASH WATER IS DIRECTED TO AN APPROVED SEDIMENT CONTROL PRACTICE.

MARYLAND STANDARDS AND SPECIFICATIONS FOR SOIL EROSION AND SEDIMENT CONTROL
U.S. DEPARTMENT OF AGRICULTURE NATURAL RESOURCES CONSERVATION SERVICE | 2011 | MARYLAND DEPARTMENT OF ENVIRONMENT WATER MANAGEMENT ADMINISTRATION

DETAIL C-1 EARTH DIKE

STANDARD SYMBOL: A-1
PLACE DESIGNATION (e.g. A-1) ON FLOW CHANNEL SIDE OF DIKE.

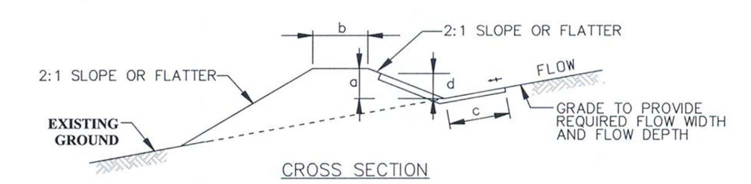

CONTINUOUS GRADE 0.5% MIN. TO 10% MAX. SLOPE

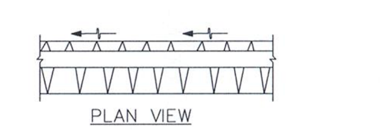

DIKE TYPE	A	B
a – DIKE HEIGHT	18 IN MIN.	30 IN MIN.
b – DIKE WIDTH	24 IN MIN.	36 IN MIN.
c – FLOW WIDTH	4 FT MIN.	6 FT MIN.
d – FLOW DEPTH	12 IN MIN.	24 IN MIN.

FLOW CHANNEL STABILIZATION

A-1 SEED WITH STRAW MULCH AND TACK. (NOT ALLOWED FOR CLEAR WATER DIVERSION.)
A-2/B-2 SEED WITH SOIL STABILIZATION MATTING OR LINE WITH SOD.
A-3/B-3 4 TO 7 INCH STONE OR EQUIVALENT RECYCLED CONCRETE PRESSED INTO SOIL A MINIMUM OF 7 INCHES AND FLUSH WITH GROUND.

CONSTRUCTION SPECIFICATIONS

1. REMOVE AND DISPOSE OF ALL TREES, BRUSH, STUMPS, OBSTRUCTIONS, AND OTHER OBJECTIONABLE MATERIAL SO AS NOT TO INTERFERE WITH PROPER FUNCTION OF EARTHDIKE.
2. EXCAVATE OR SHAPE EARTH DIKE TO LINE, GRADE, AND CROSS SECTION AS SPECIFIED. BANK PROJECTIONS OR OTHER IRREGULARITIES ARE NOT ALLOWED.
3. COMPACT FILL.
4. CONSTRUCT FLOW CHANNEL ON AN UNINTERRUPTED, CONTINUOUS GRADE, ADJUSTING THE LOCATION DUE TO FIELD CONDITIONS AS NECESSARY TO MAINTAIN POSITIVE DRAINAGE.
5. PROVIDE OUTLET PROTECTION AS REQUIRED ON APPROVED PLAN.
6. STABILIZE EARTH DIKE WITHIN THREE DAYS OF INSTALLATION. STABILIZE FLOW CHANNEL FOR CLEAR WATER DIVERSION WITHIN 24 HOURS OF INSTALLATION.
7. MAINTAIN LINE, GRADE, AND CROSS SECTION. REMOVE ACCUMULATED SEDIMENT AND DEBRIS, AND MAINTAIN POSITIVE DRAINAGE. KEEP EARTH DIKE AND POINT OF DISCHARGE FREE OF EROSION, AND CONTINUOUSLY MEET REQUIREMENTS FOR ADEQUATE VEGETATIVE ESTABLISHMENT IN ACCORDANCE WITH SECTION B-4 VEGETATIVE STABILIZATION.
8. UPON REMOVAL OF EARTH DIKE, GRADE AREA FLUSH WITH EXISTING GROUND. WITHIN 24 HOURS OF REMOVAL STABILIZE DISTURBED AREA WITH TOPSOIL, SEED, AND MULCH, OR AS SPECIFIED ON APPROVED PLAN.

MARYLAND STANDARDS AND SPECIFICATIONS FOR SOIL EROSION AND SEDIMENT CONTROL
U.S. DEPARTMENT OF AGRICULTURE NATURAL RESOURCES CONSERVATION SERVICE | 2011 | MARYLAND DEPARTMENT OF ENVIRONMENT WATER MANAGEMENT ADMINISTRATION

MODIFIED SUPER SILT FENCE

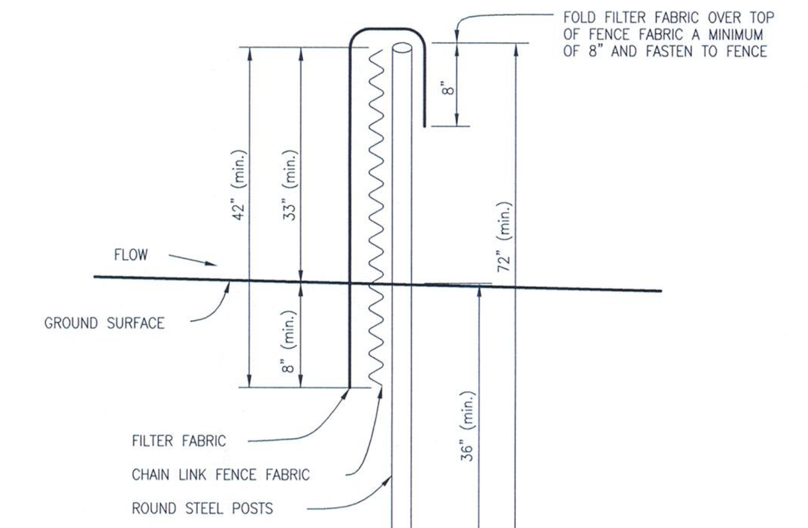

STANDARD SYMBOL: SSF

NOTES

1. Steel posts must be Schedule 40 or 'SS-40', 2.5" diameter, galvanized pipe. Post spacing must not exceed 10 linear feet. Posts do not need to be set in concrete.
2. Chain link fence fabric must be 2"x#9 gauge x 42" KK galvanized wire. Chain link fence fabric must be stretched taut and securely fastened to posts with fence wire.
3. Filter fabric must be MSHA Class 'F' fabric. Filter fabric must be stretched taut and securely fastened to chain link fence, front and back. Where two ends of filter cloth meet, they must be overlapped a minimum of 6", folded together and fastened.
4. Maintenance must be performed as needed and silt buildups removed when they reach an 18" depth above existing ground or when "bulges" develop in the silt fence.
5. All other details and specifications shall be in accordance with U.S.D.A.-S.C.S., M.D.E.-W.M.A.and M.S.H.A. specifications.

SC/SSF-1MOD

MONTGOMERY COUNTY DEPARTMENT OF PERMITTING SERVICES WATER RESOURCES MANAGEMENT
DATE: February, 1997
SCALE: NONE

DETAIL E-1 SILT FENCE

STANDARD SYMBOL: SF

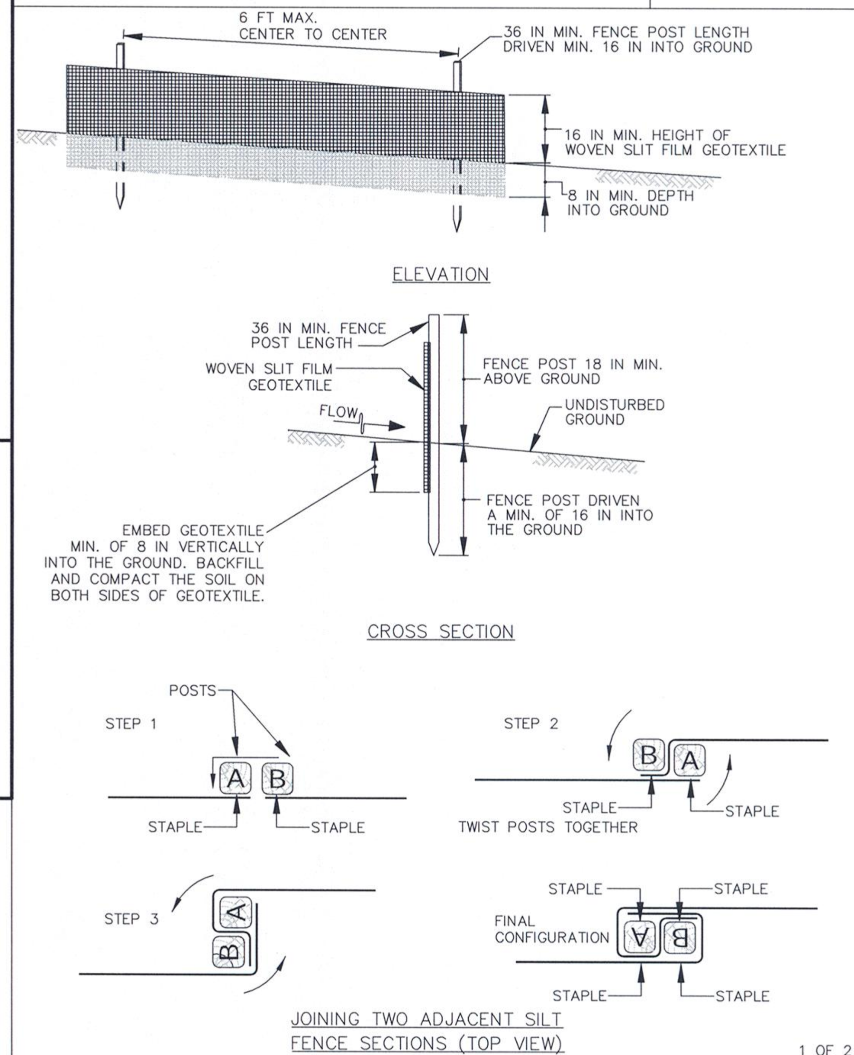

1 OF 2

MARYLAND STANDARDS AND SPECIFICATIONS FOR SOIL EROSION AND SEDIMENT CONTROL
U.S. DEPARTMENT OF AGRICULTURE NATURAL RESOURCES CONSERVATION SERVICE | 2011 | MARYLAND DEPARTMENT OF ENVIRONMENT WATER MANAGEMENT ADMINISTRATION

DETAIL E-1 SILT FENCE

STANDARD SYMBOL: SF

CONSTRUCTION SPECIFICATIONS

1. USE WOOD POSTS 1¾ X 1¾ ± ⅟₁₆ INCH (MINIMUM) SQUARE CUT OF SOUND QUALITY HARDWOOD. AS AN ALTERNATIVE TO WOODEN POST USE STANDARD "T" OR "U" SECTION STEEL POSTS WEIGHING NOT LESS THAN 1 POUND PER LINEAR FOOT.
2. USE 36 INCH MINIMUM POSTS DRIVEN 16 INCH MINIMUM INTO GROUND NO MORE THAN 6 FEET APART.
3. USE WOVEN SLIT FILM GEOTEXTILE AS SPECIFIED IN SECTION H-1 MATERIALS AND FASTEN GEOTEXTILE SECURELY TO UPSLOPE SIDE OF FENCE POSTS WITH WIRE TIES OR STAPLES AT TOP AND MID-SECTION.
4. PROVIDE MANUFACTURER CERTIFICATION TO THE AUTHORIZED REPRESENTATIVE OF THE INSPECTION/ENFORCEMENT AUTHORITY SHOWING THAT THE GEOTEXTILE USED MEETS THE REQUIREMENTS IN SECTION H-1 MATERIALS.
5. EMBED GEOTEXTILE A MINIMUM OF 8 INCHES VERTICALLY INTO THE GROUND. BACKFILL AND COMPACT THE SOIL ON BOTH SIDES OF FABRIC.
6. WHERE TWO SECTIONS OF GEOTEXTILE ADJOIN: OVERLAP, TWIST, AND STAPLE TO POST IN ACCORDANCE WITH THIS DETAIL.
7. EXTEND BOTH ENDS OF THE SILT FENCE A MINIMUM OF FIVE HORIZONTAL FEET UPSLOPE AT 45 DEGREES TO THE MAIN FENCE ALIGNMENT TO PREVENT RUNOFF FROM GOING AROUND THE ENDS OF THE SILT FENCE.
8. REMOVE ACCUMULATED SEDIMENT AND DEBRIS WHEN BULGES DEVELOP IN SILT FENCE OR WHEN SEDIMENT REACHES 25% OF FENCE HEIGHT. REPLACE GEOTEXTILE IF TORN. IF UNDERMINING OCCURS, REINSTALL FENCE.

2 OF 2

MARYLAND STANDARDS AND SPECIFICATIONS FOR SOIL EROSION AND SEDIMENT CONTROL
U.S. DEPARTMENT OF AGRICULTURE NATURAL RESOURCES CONSERVATION SERVICE | 2011 | MARYLAND DEPARTMENT OF ENVIRONMENT WATER MANAGEMENT ADMINISTRATION

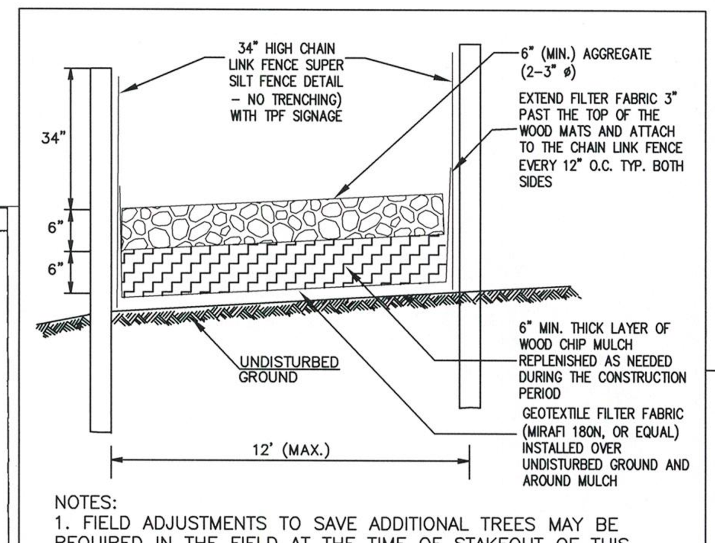

NOTES:
1. FIELD ADJUSTMENTS TO SAVE ADDITIONAL TREES MAY BE REQUIRED IN THE FIELD AT THE TIME OF STAKEOUT OF THIS ACCESS ROUTE AT THE DISCRETION OF M-NCPPC AND THE PARKS DEPARTMENT. ALIGNMENT SHOWN ON THE PLAN WILL BE ADHERED TO AS MUCH AS POSSIBLE.
2. CONTRACTOR SHALL SEQUENCE CONSTRUCTION SUCH THAT NO EQUIPMENT IMPACTS AREA TO BE PROTECTED PRIOR TO MULCH PLACEMENT.
3. FILTER FABRIC SHALL BE A SINGLE PIECE ACROSS WIDTH. OVERLAP FABRIC BY 18" MIN. ALONG LENGTH OF ROUTE.
4. FILTER FABRIC MAY ONLY BE ELIMINATED AT DIRECTION OF M-NCPPC ARBORIST.
5. CONTRACTOR SHALL MAINTAIN ACCESS ROAD THROUGHOUT CONSTRUCTION PERIOD.
6. MULCH SHALL BE DISPOSED OF OFF-SITE UNLESS OTHERWISE APPROVED BY M-NCPPC. WHERE MULCH IS TO REMAIN, FILTER FABRIC SHALL BE AN APPROVED BIODEGRADABLE TYPE).

ACCESS ROAD DETAIL (STONE/MULCH)

NOT TO SCALE

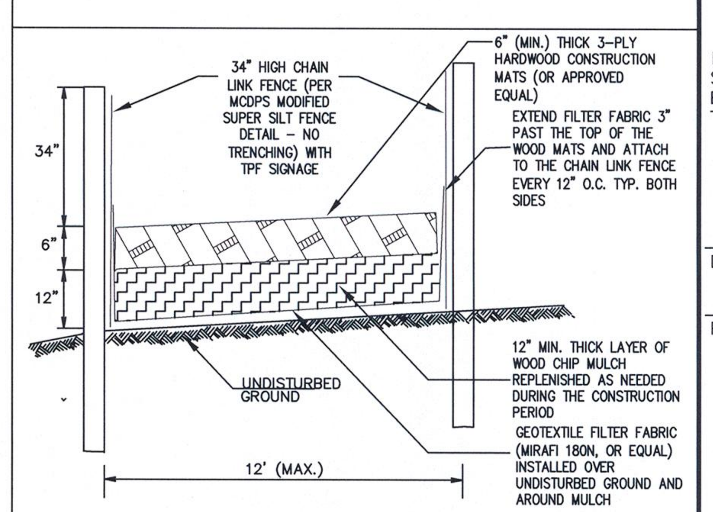

NOTES:
1.FIELD ADJUSTMENTS TO SAVE ADDITIONAL TREES MAY BE REQUIRED IN THE FIELD AT THE TIME OF STAKEOUT OF THIS ACCESS ROUTE AT THE DISCRETION OF M-NCPPC AND THE PARKS DEPARTMENT. ALIGNMENT SHOWN ON THE PLAN WILL BE ADHERED TO AS MUCH AS POSSIBLE.2. CONTRACTOR SHALL SEQUENCE CONSTRUCTION SUCH THAT NO EQUIPMENT IMPACTS AREA TO BE PROTECTED PRIOR TO MULCH PLACEMENT.
3. FILTER FABRIC SHALL BE A SINGLE PIECE ACROSS WIDTH. OVERLAP FABRIC BY 18" MIN. ALONG LENGTH OF ROUTE.
4. FILTER FABRIC MAY ONLY BE ELIMINATED AT DIRECTION OF M-NCPPC ARBORIST.
5. CONTRACTOR SHALL MAINTAIN ACCESS ROAD THROUGHOUT CONSTRUCTION PERIOD.
6. MULCH SHALL BE DISPOSED OF OFF-SITE UNLESS OTHERWISE APPROVED BY M-NCPPC. WHERE MULCH IS TO REMAIN, FILTER FABRIC SHALL BE AN APPROVED BIODEGRADABLE TYPE).

HEAVY DUTY MULCH MAT DETAIL

NOT TO SCALE

DESIGN CERTIFICATION

I hereby certify that this plan has been prepared in accordance with the "2011 Maryland Standards and Specification for Soil Erosion and Sediment Control," Montgomery County Department of Permitting Services Executive Regulations 5-90, 7-02AM and 36-90, and Montgomery County Department of Public Works and Transportation "Storm Drain Design Criteria" dated November 2013.

Design Engineer Signature: [signature] Date: 8/22/16
Printed Name: Brian Davila Registration Number: 19908

CUT AND FILL CERTIFICATION

I hereby certify that the estimated total amount of excavation and fill as shown on these plans has been computed to be 1700 cu. yds. of excavation and 1200 cu. yds. of fill and the total area to be disturbed as shown on these plans has been determined to be 55818 sf. or 1.28 Ac.

Signature (P.E.): [signature] Maryland Registration No.: 19908
Printed Name: Brian Davila Date: 8/22/16

OWNERS/DEVELOPER CERTIFICATION

I/We hereby certify that all clearing, grading, construction and/or development will be done pursuant to this plan and that any responsible personnel involved in the construction project will have a certificate of attendance at a Department of Natural Resources approved training program for the control of sediment and erosion before beginning the project.

Owner/Developer Signature ________ Date ________
Gene Gopenko
Printed Name and Title

FOR SEDIMENT CONTROL ONLY

NOTES:
1. THE CONTRACTOR SHALL COORDINATE WITH THE OWNER, M-NCPPC INSPECTOR, AND MCDPS SEDIMENT CONTROL INSPECTOR FOR THE USE OF FILTER LOGS IN AREAS OF MATURE TREES. (SEE SHEET 9)
2. EXISTING TREES TO BE REMOVED ONLY AS SHOWN ON APPROVED FOREST CONSERVATION PLAN (SEE SHEETS 23 & 24).
3. FOR WSSC ABANDONMENT AND REPLACEMENT PLANS FOR 8"S, SEE WSSC CONTRACT NO. 08RMS699A OR CPJ FILE NO. 36-188-46.1 (SEE SHEETS 21 & 22)
4. ALL DISTURBED AREAS MUST BE TOPSOILED PER THE "STANDARDS AND SPECIFICATIONS FOR SOIL PREPARATION, TOPSOILING, AND SOIL AMENDMENTS" (SEE SHEET 8).
5. FIELD ADJUSTMENTS TO SAVE ADDITIONAL TREES MAY BE REQUIRED IN THE FIELD AT THE TIME OF STAKEOUT OF THIS ACCESS ROUTE AT THE DISCRETION OF M-NCPPC AND THE PARKS DEPARTMENT. ALIGNMENT SHOWN ON THE PLAN WILL BE ADHERED TO AS MUCH AS POSSIBLE.

THE MARYLAND-NATIONAL CAPITAL PARK AND PLANNING COMMISSION, DEPARTMENT OF PARK AND PLANNING

M-NCPPC RECORD FILE NO. ________
REVIEWED BY ________
APPROVED BY ________
CHIEF, CONSTRUCTION SECTION
DATE APPROVED ________

THIS IS NOT A PERMIT TO BEGIN CONSTRUCTION

This approval is for technical review only. For permit For permit information, contact Jay Childs, Construction Supervisor at (301)495-2574.

M.C.D.P.S. APPROVED FOR:

Stormwater Management:

Reviewed ________ Date
Approved ________ Date
N/A
S.M.File No.

Sediment Control Technical Requirements:

Reviewed ________ Date
Approved ________ Date

Administrative Requirements:

Reviewed ________ Date
232507
SEDIMENT CONTROL PERMIT No.

NOTE
MCDPS APPROVAL OF THIS PLAN WILL EXPIRE ONE YEAR FROM THE DATE OF APPROVAL IF THE PROJECT HAS NOT STARTED UNLESS THE PERMIT HAS BEEN EXTENDED.

THIS APPROVAL DOES NOT NEGATE THE NEED OF A MCDPS ACCESS PERMIT.

STORMWATER MANAGEMENT POND MAINTENANCE SEQUENCE NO. 826 SEDIMENT CONTROL DETAILS

PUEBLO ROAD

GAITHERSBURG (9th) ELECTION DISTRICT
MONTGOMERY COUNTY, MARYLAND

CPJ Associates
Charles P. Johnson & Associates, Inc.
Civil and Environmental Engineers • Planners • Landscape Architects • Surveyors
1751 Elton Rd., Ste. 300 Silver Spring, MD 20903 301.434.7000 Fax: 301.434.9394
www.cpja.com • Gaithersburg, MD • Frederick, MD • Stevensville, MD • Fairfax, VA

CLIENT: Montgomery County
Department of Environmental Protection
255 Rockville Pike, Suite 120
Rockville, Maryland 20850-4166
Phone: (240) 777-7723
Contact: Mr. Gene Gopenko

PRELIMINARY PLAN NO: N/A	SITE PLAN NO: N/A
DESIGN JBB	SHEET 8 OF 24
DRAFT GC	
DATE APRIL, 2016	FILE NO: 36-188-24.02B
SCALE NONE	

COPYRIGHT © LATEST DATE HEREON CHARLES P. JOHNSON & ASSOCIATES, INC. ALL RIGHTS RESERVED, UNAUTHORIZED USE OR REPRODUCTION IS PROHIBITED.

Attached Xrefs: TB24x36/08-565-02/GIS Topo-565/46-01/20-03

DETAIL E-3 SUPER SILT FENCE

STANDARD SYMBOL: SSF

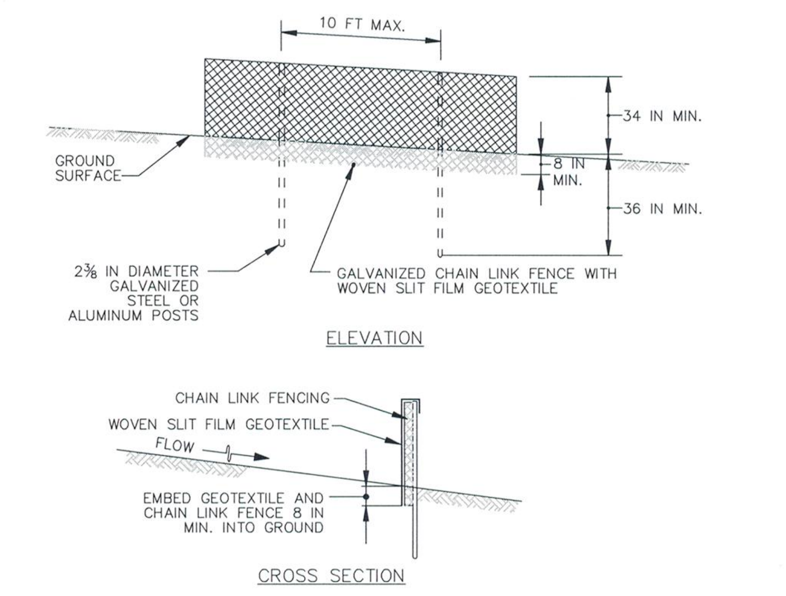

CONSTRUCTION SPECIFICATIONS

1. INSTALL 2⅜ INCH DIAMETER GALVANIZED STEEL POSTS OF 0.095 INCH WALL THICKNESS AND SIX FOOT LENGTH SPACED NO FURTHER THAN 10 FEET APART. DRIVE THE POSTS A MINIMUM OF 36 INCHES INTO THE GROUND.
2. FASTEN 9 GAUGE OR HEAVIER GALVANIZED CHAIN LINK FENCE (2⅜ INCH MAXIMUM OPENING) 42 INCHES IN HEIGHT SECURELY TO THE FENCE POSTS WITH WIRE TIES OR HUG RINGS.
3. FASTEN WOVEN SLIT FILM GEOTEXTILE AS SPECIFIED IN SECTION H-1 MATERIALS, SECURELY TO THE UPSLOPE SIDE OF CHAIN LINK FENCE WITH TIES SPACED EVERY 24 INCHES AT THE TOP AND MID SECTION. EMBED GEOTEXTILE AND CHAIN LINK FENCE A MINIMUM OF 8 INCHES INTO THE GROUND.
4. WHERE ENDS OF THE GEOTEXTILE COME TOGETHER, THE ENDS SHALL BE OVERLAPPED BY 6 INCHES, FOLDED, AND STAPLED TO PREVENT SEDIMENT BY PASS.
5. EXTEND BOTH ENDS OF THE SUPER SILT FENCE A MINIMUM OF FIVE HORIZONTAL FEET UPSLOPE AT 45 DEGREES TO THE MAIN FENCE ALIGNMENT TO PREVENT RUNOFF FROM GOING AROUND THE ENDS OF THE SUPER SILT FENCE.
6. PROVIDE MANUFACTURER CERTIFICATION TO THE INSPECTION/ENFORCEMENT AUTHORITY SHOWING THAT GEOTEXTILE USED MEETS THE REQUIREMENTS IN SECTION H-1 MATERIALS.
7. REMOVE ACCUMULATED SEDIMENT AND DEBRIS WHEN BULGES DEVELOP IN FENCE OR WHEN SEDIMENT REACHES 25% OF FENCE HEIGHT. REPLACE GEOTEXTILE IF TORN. IF UNDERMINING OCCURS, REINSTALL CHAIN LINK FENCING AND GEOTEXTILE.

DETAIL E-6 FILTER LOG

STANDARD SYMBOL: FL-18

DESIGNATION FL-18 REFERS TO 18 INCH DIAMETER FILTER LOG.

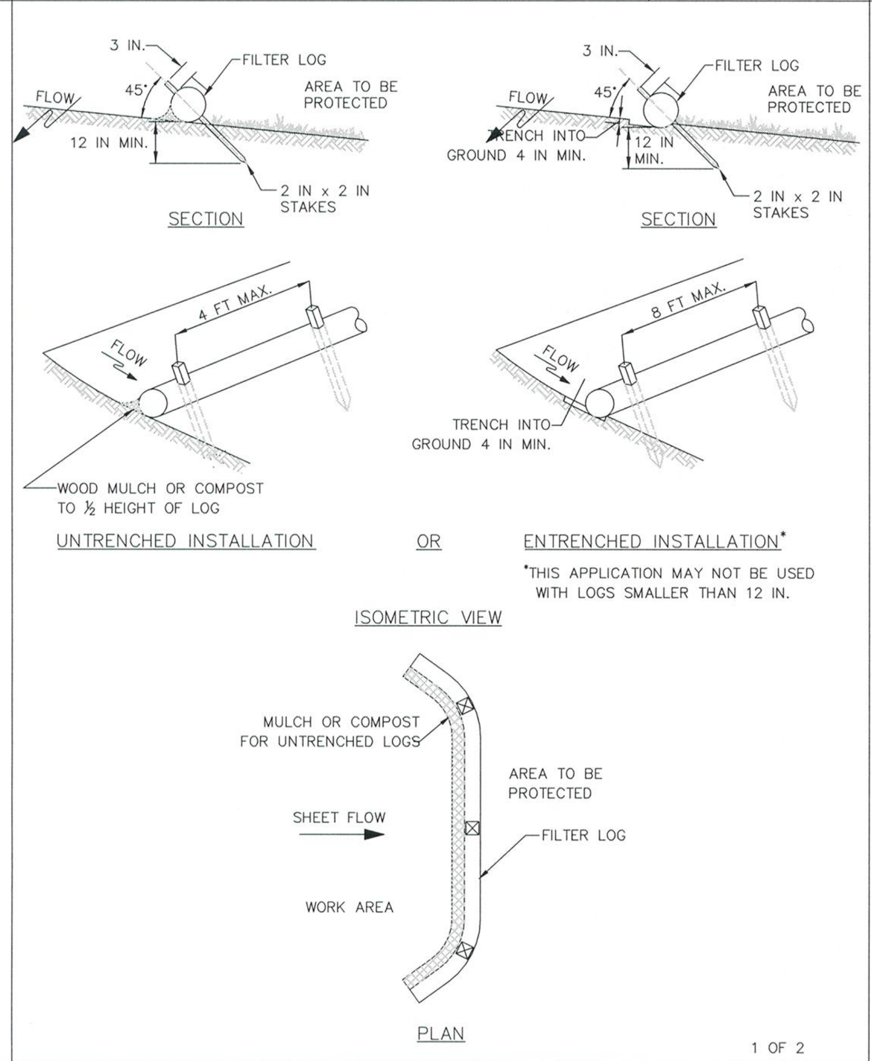

1 OF 2

DETAIL E-6 FILTER LOG

STANDARD SYMBOL: FL-18

DESIGNATION FL-18 REFERS TO 18 INCH DIAMETER FILTER LOG.

CONSTRUCTION SPECIFICATIONS

1. PRIOR TO INSTALLATION, CLEAR ALL OBSTRUCTIONS INCLUDING ROCKS, CLODS, AND DEBRIS GREATER THAN ONE INCH THAT MAY INTERFERE WITH PROPER FUNCTION OF FILTER LOG.
2. FILL LOG NETTING UNIFORMLY WITH COMPOST (IN ACCORDANCE WITH SECTION H-1 MATERIALS), OR OTHER APPROVED BIODEGRADABLE MATERIAL TO DESIRED LENGTH SUCH THAT LOGS DO NOT DEFORM.
3. INSTALL FILTER LOGS PERPENDICULAR TO THE FLOW DIRECTION AND PARALLEL TO THE SLOPE WITH THE BEGINNING AND END OF THE INSTALLATION POINTING SLIGHTLY UP THE SLOPE CREATING A "J" SHAPE AT EACH END TO PREVENT BYPASS.
4. FOR UNTRENCHED INSTALLATION BLOW OR HAND PLACE MULCH OR COMPOST ON UPHILL SIDE OF THE SLOPE ALONG LOG.
5. STAKE FILTER LOG EVERY 4 FEET OR CLOSER ALONG ENTIRE LENGTH OF LOG OR TRENCH LOG INTO GROUND A MINIMUM OF 4 INCHES AND STAKE LOG EVERY 8 FEET OR CLOSER.
6. USE STAKES WITH A MINIMUM NOMINAL CROSS SECTION OF 2X2 INCH AND OF SUFFICIENT LENGTH TO ATTAIN A MINIMUM OF 12 INCHES INTO THE GROUND AND 3 INCHES PROTRUDING ABOVE LOG.
7. WHEN MORE THAN ONE LOG IS NEEDED, OVERLAP ENDS 12 INCHES MINIMUM AND STAKE.
8. REMOVE SEDIMENT WHEN IT HAS ACCUMULATED TO A DEPTH OF ½ THE EXPOSED HEIGHT OF LOG AND REPLACE MULCH. REPLACE FILTER LOG IF TORN. REINSTALL FILTER LOG IF UNDERMINING OR DISLODGING OCCURS. REPLACE CLOGGED FILTER LOGS. FOR PERMANENT APPLICATIONS, ESTABLISH AND CONTINUOUSLY MEET REQUIREMENTS FOR ADEQUATE VEGETATIVE ESTABLISHMENT IN ACCORDANCE WITH SECTION B-4 VEGETATIVE STABILIZATION.

NOTE:

SEE FOREST CONSERVATION PLAN FOR APPROVED TREE AND FOREST PROTECTION MEASURES.

2 OF 2

DETAIL F-2 SUMP PIT

STANDARD SYMBOL: SP

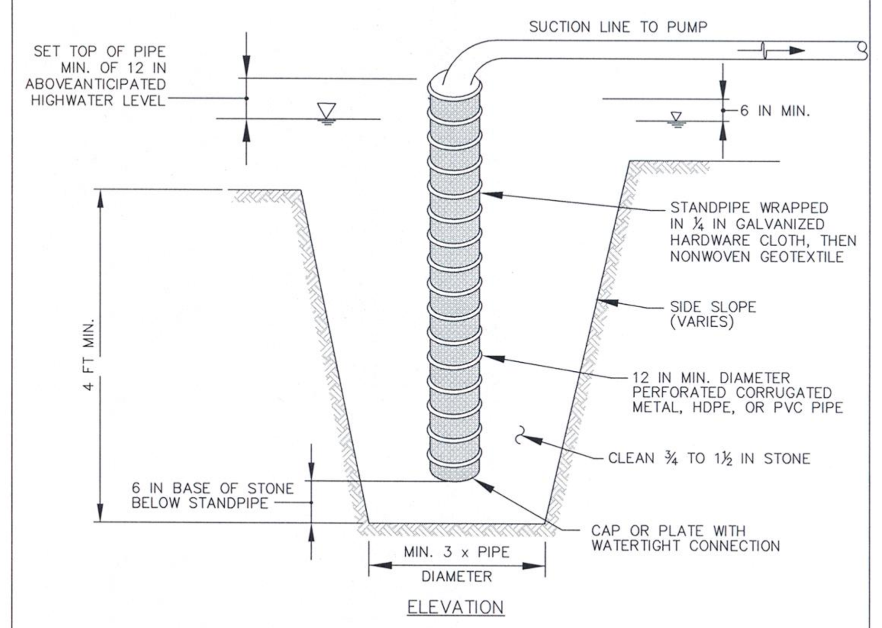

CONSTRUCTION SPECIFICATIONS

1. USE 12 INCH OR LARGER DIAMETER CORRUGATED METAL, HDPE, OR PVC PIPE WITH 1 INCH DIAMETER PERFORATIONS, 6 INCHES ON CENTER. BOTTOM OF PIPE MUST BE CAPPED WITH WATERTIGHT SEAL.
2. WRAP PIPE WITH ¼ INCH GALVANIZED HARDWARE CLOTH AND WRAP NONWOVEN GEOTEXTILE, AS SPECIFIED IN SECTION H-1 MATERIALS, OVER THE HARDWARE CLOTH.
3. EXCAVATE PIT TO THREE TIMES THE PIPE DIAMETER AND FOUR FEET IN DEPTH. PLACE ¾ TO 1½ INCH STONE OR EQUIVALENT RECYCLED CONCRETE, 6 INCHES IN DEPTH PRIOR TO PIPE PLACEMENT.
4. SET TOP OF PIPE MINIMUM 12 INCHES ABOVE ANTICIPATED WATER SURFACE ELEVATION.
5. BACKFILL PIT AROUND THE PIPE WITH ¾ TO 1½ INCH CLEAN STONE OR EQUIVALENT RECYCLED CONCRETE AND EXTEND STONE A MINIMUM OF 6 INCHES ABOVE ANTICIPATED WATER SURFACE ELEVATION.
6. DISCHARGE TO A STABLE AREA AT A NONEROSIVE RATE.
7. A SUMP PIT REQUIRES FREQUENT MAINTENANCE. IF SYSTEM CLOGS, REMOVE PERFORATED PIPE AND REPLACE GEOTEXTILE AND STONE. KEEP POINT OF DISCHARGE FREE OF EROSION.

DETAIL F-4 FILTER BAG

STANDARD SYMBOL: FB

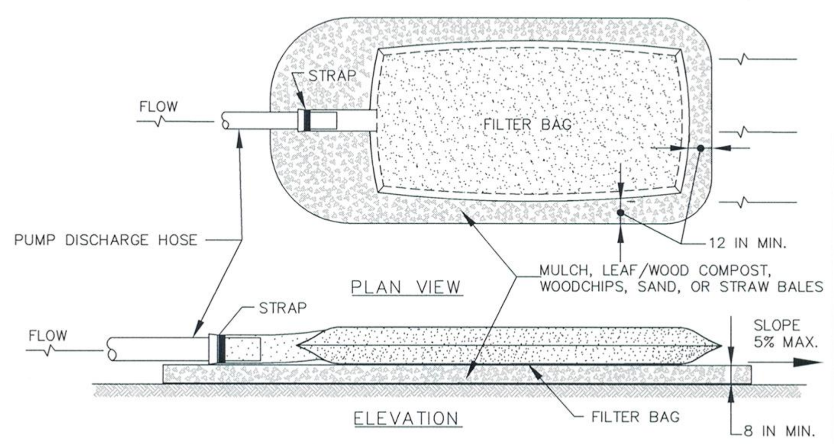

CONSTRUCTION SPECIFICATIONS

1. TIGHTLY SEAL SLEEVE AROUND THE PUMP DISCHARGE HOSE WITH A STRAP OR SIMILAR DEVICE.
2. PLACE FILTER BAG ON SUITABLE BASE (E.G., MULCH, LEAF/WOOD COMPOST, WOODCHIPS, SAND, OR STRAW BALES) LOCATED ON A LEVEL OR 5% MAXIMUM SLOPING SURFACE. DISCHARGE TO A STABILIZED AREA. EXTEND BASE A MINIMUM OF 12 INCHES FROM EDGES OF BAG.
3. CONTROL PUMPING RATE TO PREVENT EXCESSIVE PRESSURE WITHIN THE FILTER BAG IN ACCORDANCE WITH THE MANUFACTURER RECOMMENDATIONS. AS THE BAG FILLS WITH SEDIMENT, REDUCE PUMPING RATE.
4. REMOVE AND PROPERLY DISPOSE OF FILTER BAG UPON COMPLETION OF PUMPING OPERATIONS OR AFTER BAG HAS REACHED CAPACITY, WHICHEVER OCCURS FIRST. SPREAD THE DEWATERED SEDIMENT FROM THE BAG IN AN APPROVED UPLAND AREA AND STABILIZE WITH SEED AND MULCH BY THE END OF THE WORK DAY. RESTORE THE SURFACE AREA BENEATH THE BAG TO ORIGINAL CONDITION UPON REMOVAL OF THE DEVICE.
5. USE NONWOVEN GEOTEXTILE WITH DOUBLE STITCHED SEAMS USING HIGH STRENGTH THREAD. SIZE SLEEVE TO ACCOMMODATE A MAXIMUM 4 INCH DIAMETER PUMP DISCHARGE HOSE. THE BAG MUST BE MANUFACTURED FROM A NONWOVEN GEOTEXTILE THAT MEETS OR EXCEEDS MINIMUM AVERAGE ROLL VALUES (MARV) FOR THE FOLLOWING:

GRAB TENSILE	250 LB	ASTM D-4632
PUNCTURE	150 LB	ASTM D-4833
FLOW RATE	70 GAL/MIN/FT²	ASTM D-4491
PERMITTIVITY (SEC⁻¹)	1.2 SEC⁻¹	ASTM D-4491
UV RESISTANCE	70% STRENGTH @ 500 HOURS	ASTM D-4355
APPARENT OPENING SIZE (AOS)	0.15-0.18 MM	ASTM D-4751
SEAM STRENGTH	90%	ASTM D-4632

6. REPLACE FILTER BAG IF BAG CLOGS OR HAS RIPS, TEARS, OR PUNCTURES. DURING OPERATION KEEP CONNECTION BETWEEN PUMP HOSE AND FILTER BAG WATER TIGHT. REPLACE BEDDING IF IT BECOMES DISPLACED.

DETAIL H-6 ONSITE CONCRETE WASHOUT STRUCTURE

STANDARD SYMBOL: CWS

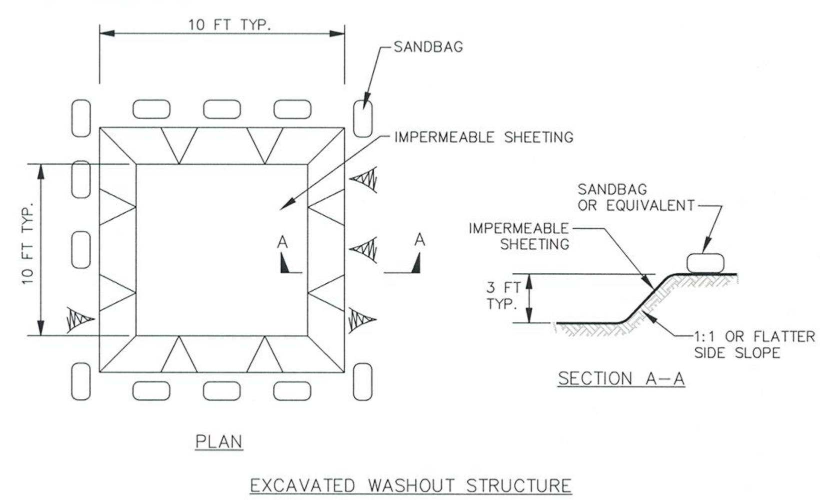

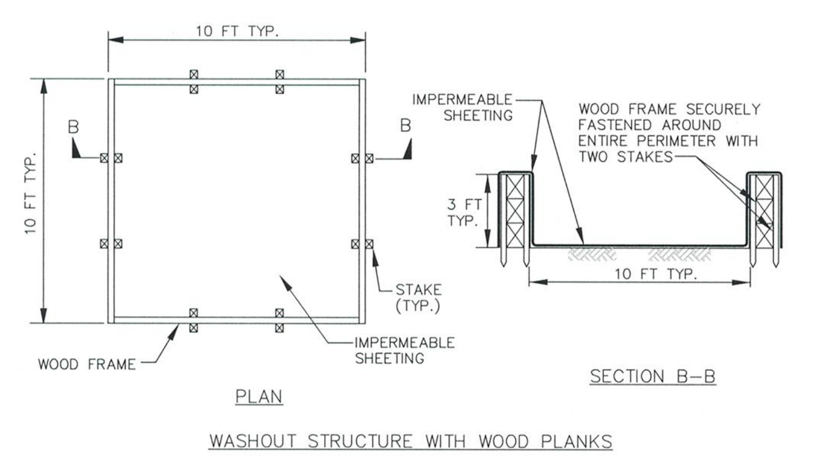

1 OF 2

DETAIL H-6 ONSITE CONCRETE WASHOUT STRUCTURE

STANDARD SYMBOL: CWS

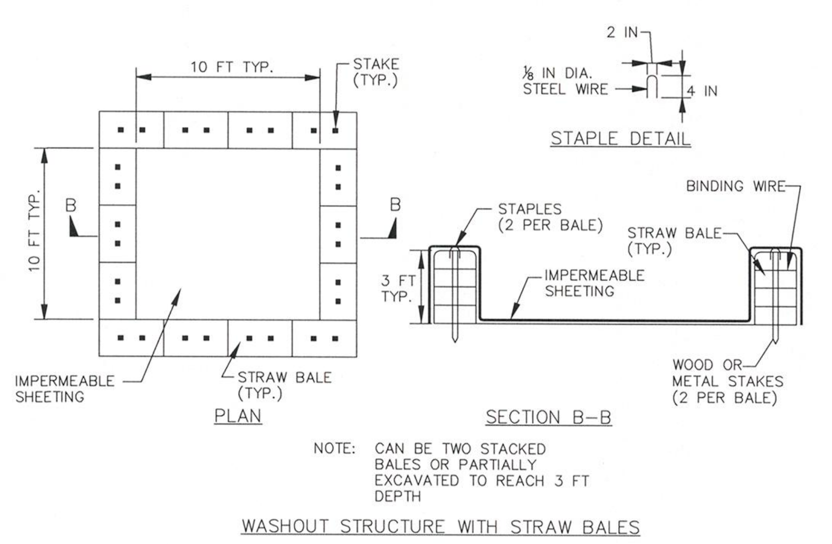

CONSTRUCTION SPECIFICATIONS

1. LOCATE WASHOUT STRUCTURE A MINIMUM OF 50 FEET AWAY FROM OPEN CHANNELS, STORM DRAIN INLETS, SENSITIVE AREAS, WETLANDS, BUFFERS AND WATER COURSES AND AWAY FROM CONSTRUCTION TRAFFIC.
2. SIZE WASHOUT STRUCTURE FOR VOLUME NECESSARY TO CONTAIN WASH WATER AND SOLIDS AND MAINTAIN AT LEAST 4 INCHES OF FREEBOARD. TYPICAL DIMENSIONS ARE 10 FEET X 10 FEET X 3 FEET DEEP.
3. PREPARE SOIL BASE FREE OF ROCKS OR OTHER DEBRIS THAT MAY CAUSE TEARS OR HOLES IN THE LINER. FOR LINER, USE 10 MIL OR THICKER UV RESISTANT, IMPERMEABLE SHEETING, FREE OF HOLES AND TEARS OR OTHER DEFECTS THAT COMPROMISE IMPERMEABILITY OF THE MATERIAL.
4. PROVIDE A SIGN FOR THE WASHOUT IN CLOSE PROXIMITY TO THE FACILITY.
5. KEEP CONCRETE WASHOUT STRUCTURE WATER TIGHT. REPLACE IMPERMEABLE LINER IF DAMAGED (E.G., RIPPED OR PUNCTURED). EMPTY OR REPLACE WASHOUT STRUCTURE THAT IS 75 PERCENT FULL, AND DISPOSE OF ACCUMULATED MATERIAL PROPERLY. DO NOT REUSE PLASTIC LINER. WET-VACUUM STORED LIQUIDS THAT HAVE NOT EVAPORATED AND DISPOSE OF IN AN APPROVED MANNER. PRIOR TO FORECASTED RAINSTORMS, REMOVE LIQUIDS OR COVER STRUCTURE TO PREVENT OVERFLOWS. REMOVE HARDENED SOLIDS, WHOLE OR BROKEN UP, FOR DISPOSAL OR RECYCLING. MAINTAIN RUNOFF DIVERSION AROUND EXCAVATED WASHOUT STRUCTURE UNTIL STRUCTURE IS REMOVED.

2 OF 2

Maryland's Guidelines To Waterway Construction
DETAIL 1.2: PUMP-AROUND PRACTICE

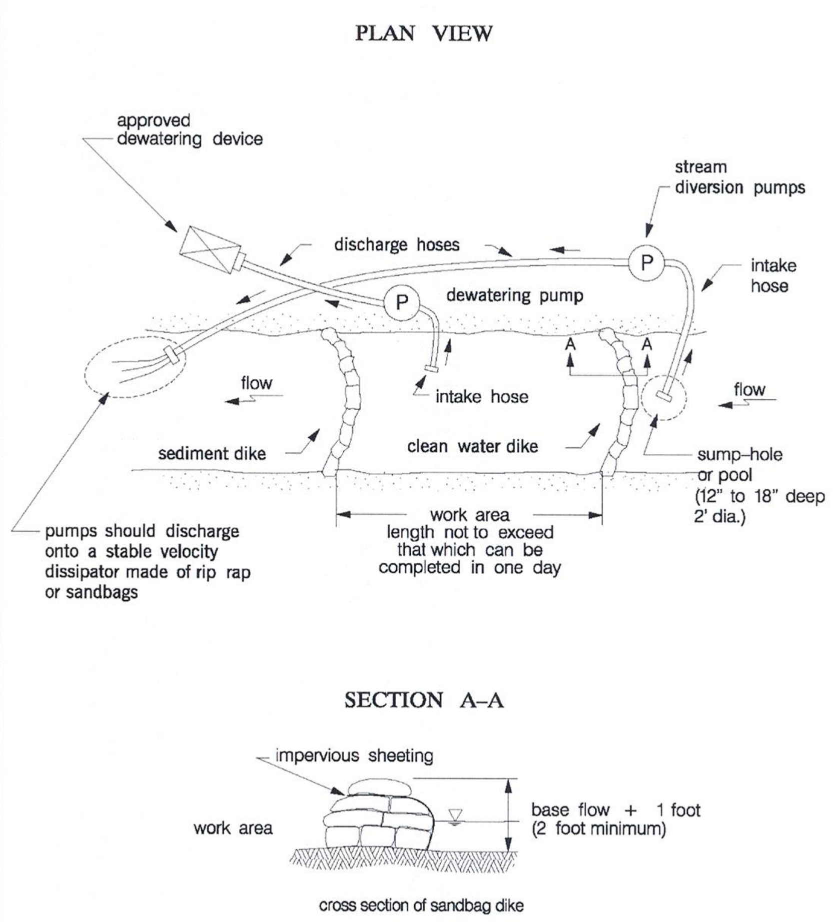

Maryland's Guidelines To Waterway Construction
DETAIL 4.8: TEMPORARY ACCESS BRIDGE

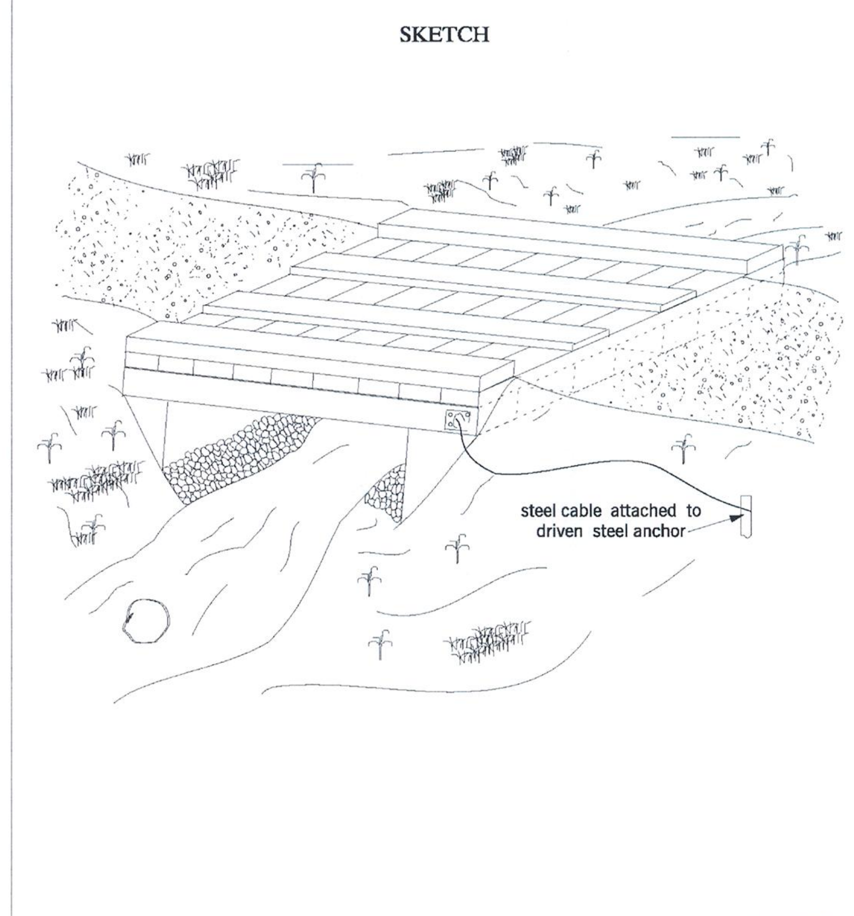

SYMBOL: TEMPORARY BRIDGE TB

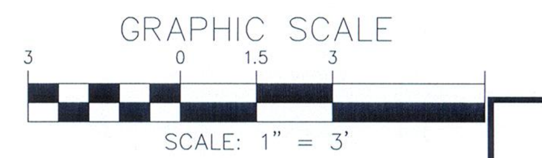

DETAIL C-8 MOUNTABLE BERM

STANDARD SYMBOL: MB

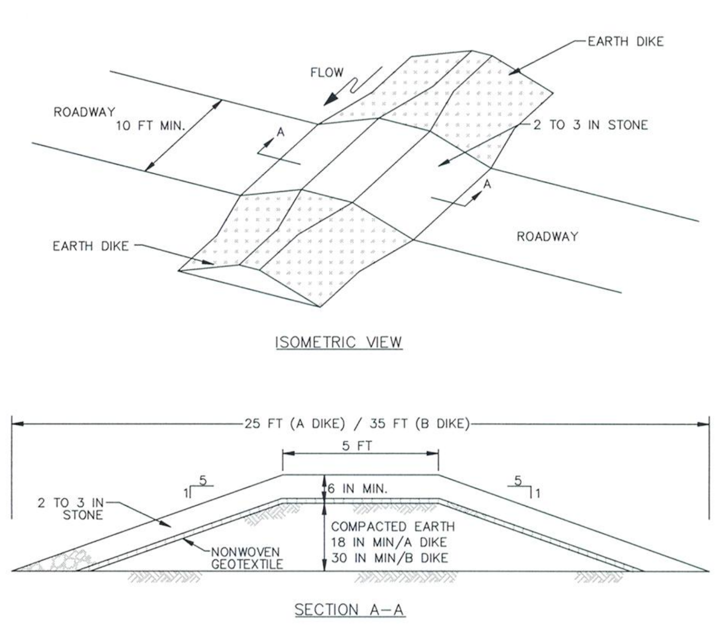

CONSTRUCTION SPECIFICATIONS

1. USE MINIMUM WIDTH OF 10 FEET TO ALLOW FOR VEHICULAR PASSAGE.
2. PLACE NONWOVEN GEOTEXTILE, AS SPECIFIED IN SECTION H-1 MATERIALS, OVER THE EARTH MOUND PRIOR TO PLACING STONE.
3. PLACE 2 TO 3 INCH STONE OR EQUIVALENT RECYCLED CONCRETE AT LEAST 6 INCHES DEEP OVER THE LENGTH AND WIDTH OF THE MOUNTABLE BERM.
4. MAINTAIN LINE, GRADE, AND CROSS SECTION. ADD STONE OR MAKE OTHER REPAIRS AS CONDITIONS DEMAND TO MAINTAIN SPECIFIED DIMENSIONS. REMOVE ACCUMULATED SEDIMENT AND DEBRIS. MAINTAIN POSITIVE DRAINAGE.

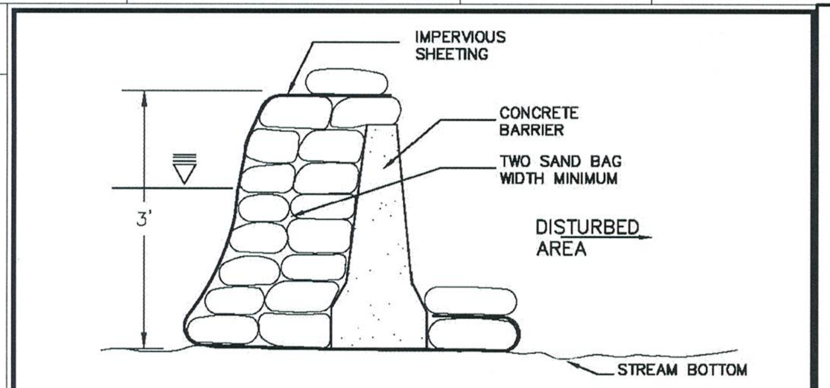

I. Description
The work shall consist of installing flow diversions for the purpose of erosion control when construction activities take place within the stream channel such as bank stabilization or bridge abutment construction.

II. Material Specifications
1. Sandbags: Sandbags shall consist of materials which are resistant to ultra-violet radiation, tearing and puncture and woven tightly enough to prevent leakage of fill material (i.e., sand, fine gravel, etc.)
2. Concrete Barrier: Typical Jersey Barrier or similar type of barrier.
3. Sheeting: Sheeting shall consist of polyethylene or other material which is impervious and resistant to puncture and tearing.

III. Construction Requirements
1. All erosion and sediment control devices shall be installed as the first order of work.
2. The diversion structure shall be installed from upstream to downstream.
3. All excavated materials shall be disposed of in a DPS approved disposal area outside the 100-year floodplain unless otherwise approved on the plans by DPS.
4. All dewatering of the construction area shall be pumped to a dewatering basin prior to re-entering the stream.
5. Sheeting shall be overlapped such that the upstream portion covers the downstream portion with at least an 18-inch overlap.
6. Sediment control devices are to remain in place until all disturbed areas are stabilized in accordance with an approved sediment and erosion control plan and the inspecting authority approves their removal.

MONTGOMERY COUNTY DEPARTMENT OF PERMITTING SERVICES WATER RESOURCES	SAND BAG DIVERSION DETAIL	DATE: 6/03
		SCALE: NONE

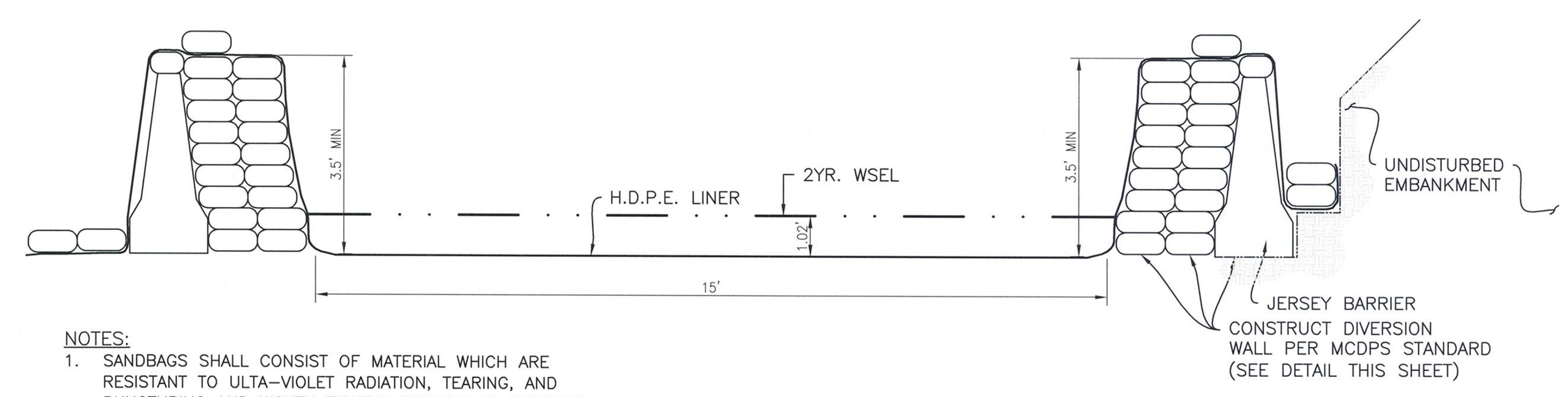

NOTES:
1. SANDBAGS SHALL CONSIST OF MATERIAL WHICH ARE RESISTANT TO ULTA-VIOLET RADIATION, TEARING, AND PUNCTURING AND WOVEN TIGHTLY ENOUGH TO PREVENT LEAKAGE OF FILL MATERIAL.
2. DIVERSION CHANNEL SHALL BE INSTALLED UPSTREAM TO DOWNSTREAM.
3. SHEETING SHALL BE OVERLAPPED SUCH THAT THE UPSTREAM PORTION COVERS THE DOWNSTREAM PORTION WITH AT LEAST AN 18-INCH OVERLAP.

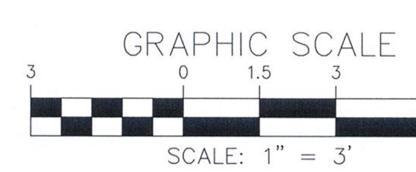

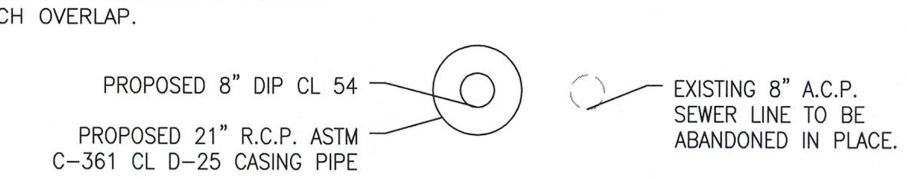

DIVERSION CHANNEL DETAIL
(LOOKING DOWNSTREAM)
SCALE: 1" = 3'

MISS UTILITY

THE CONTRACTOR SHALL CALL "MISS UTILITY" AT 1-800-257-7777 48 HOURS PRIOR TO THE START OF WORK. THE CONTRACTOR IS RESPONSIBLE FOR ENSURING THAT ALL UNDERGROUND UTILITIES IN THE AREA OF PROPOSED WORK ARE LOCATED PRIOR O COMMENCING CONSTRUCTION WORK. THE CONTRACTOR IS RESPONSIBLE FOR COMPLIANCE WITH THE REQUIREMENTS OF CHAPTER 36A OF THE MONTGOMERY COUNTY CODE.

THE CONTRACTOR IS ALSO RESPONSIBLE FOR LOCATING ALL PRIVATE UTILITIES (NOT LOCATED BY MISS UTILITY) WITHIN M-NCPPC PROPERTY AT THEIR EXPENSE. ALL UTILITIES SHOWN ON THE PLANS ARE PROVIDED FOR INFORMATION ONLY AND SHALL BE CONSIDERED APPROXIMATE. M-NCPPC SHALL NOT BE RESPONSIBLE FOR LOCATING UNDERGROUND UTILITIES. ANY UTILTIES OR OTHER UNDERGROUND FACILITIES DAMAGED DURING CONSTRUCTION SHALL BE REPAIRED/REPLACED AT THE CONTRACTOR'S SOLE EXPENSE.

PROFESSIONAL CERTIFICATION
I HEREBY CERTIFY THAT THESE DOCUMENTS WERE PREPARED OR APPROVED BY ME, AND THAT I AM A DULY LICENSED PROFESSIONAL ENGINEER UNDER THE LAWS OF THE STATE OF MARYLAND.
LICENSE #: 19908
EXPIRATION DATE: 01/06/2017

THE MARYLAND-NATIONAL CAPITAL PARK AND PLANNING COMMISSION, DEPARTMENT OF PARK AND PLANNING

M-NCPPC RECORD FILE NO. ______
REVIEWED BY ______
APPROVED BY ______
CHIEF, CONSTRUCTION SECTION
DATE APPROVED ______

THIS IS NOT A PERMIT TO BEGIN CONSTRUCTION

This approval is for technical review only. For permit For permit information, contact Jay Childs, Construction Supervisor at (301)495-2574.

FOR SEDIMENT CONTROL ONLY

M.C.D.P.S. APPROVED FOR:

Stormwater Management:

Reviewed ______ Date
Approved ______ Date
N/A
S.M.File No.

Sediment Control Technical Requirements:

Reviewed ______ Date
Approved ______ Date

Administrative Requirements:

Reviewed ______ Date
232507
SEDIMENT CONTROL PERMIT No.

NOTE
MCDPS APPROVAL OF THIS PLAN WILL EXPIRE ONE YEAR FROM THE DATE OF APPROVAL IF THE PROJECT HAS NOT STARTED UNLESS THE PERMIT HAS BEEN EXTENDED.

THIS APPROVAL DOES NOT NEGATE THE NEED OF A MCDPS ACCESS PERMIT.

STORMWATER MANAGEMENT POND MAINTENANCE SEQUENCE NO. 826 SEDIMENT CONTROL DETAILS
PUEBLO ROAD
GAITHERSBURG (9th) ELECTION DISTRICT
MONTGOMERY COUNTY, MARYLAND

CPJ Associates
Charles P. Johnson & Associates, Inc.
Civil and Environmental Engineers • Planners • Landscape Architects • Surveyors
1751 Elton Rd., Ste. 300 Silver Spring, MD 20903 301.434.7000 Fax: 301.434.9394
www.cpja.com • Gaithersburg, MD • Frederick, MD • Stevensville, MD • Fairfax, VA

CLIENT: Montgomery County
Department of Environmental Protection
255 Rockville Pike, Suite 120
Rockville, Maryland 20850-4166
Phone: (240) 777-7723
Contact: Mr. Gene Gopenko

COPYRIGHT © LATEST DATE HEREON CHARLES P. JOHNSON & ASSOCIATES, INC. ALL RIGHTS RESERVED, UNAUTHORIZED USE OR REPRODUCTION IS PROHIBITED.

PRELIMINARY PLAN NO:	SITE PLAN NO:
N/A	N/A
DESIGN JBB	SHEET 9 OF 24
DRAFT GC	
DATE APRIL, 2016	FILE NO: 36-188-24.02B
SCALE NONE	

Attached Xrefs: TB24x36/08-565-02/GIS Topo-565/46-01/20-03

Last Saved 7/29/2016 Last Plotted 8/19/2016 10:02 AM Sheet N:\36188\DWG\24-02S7-9

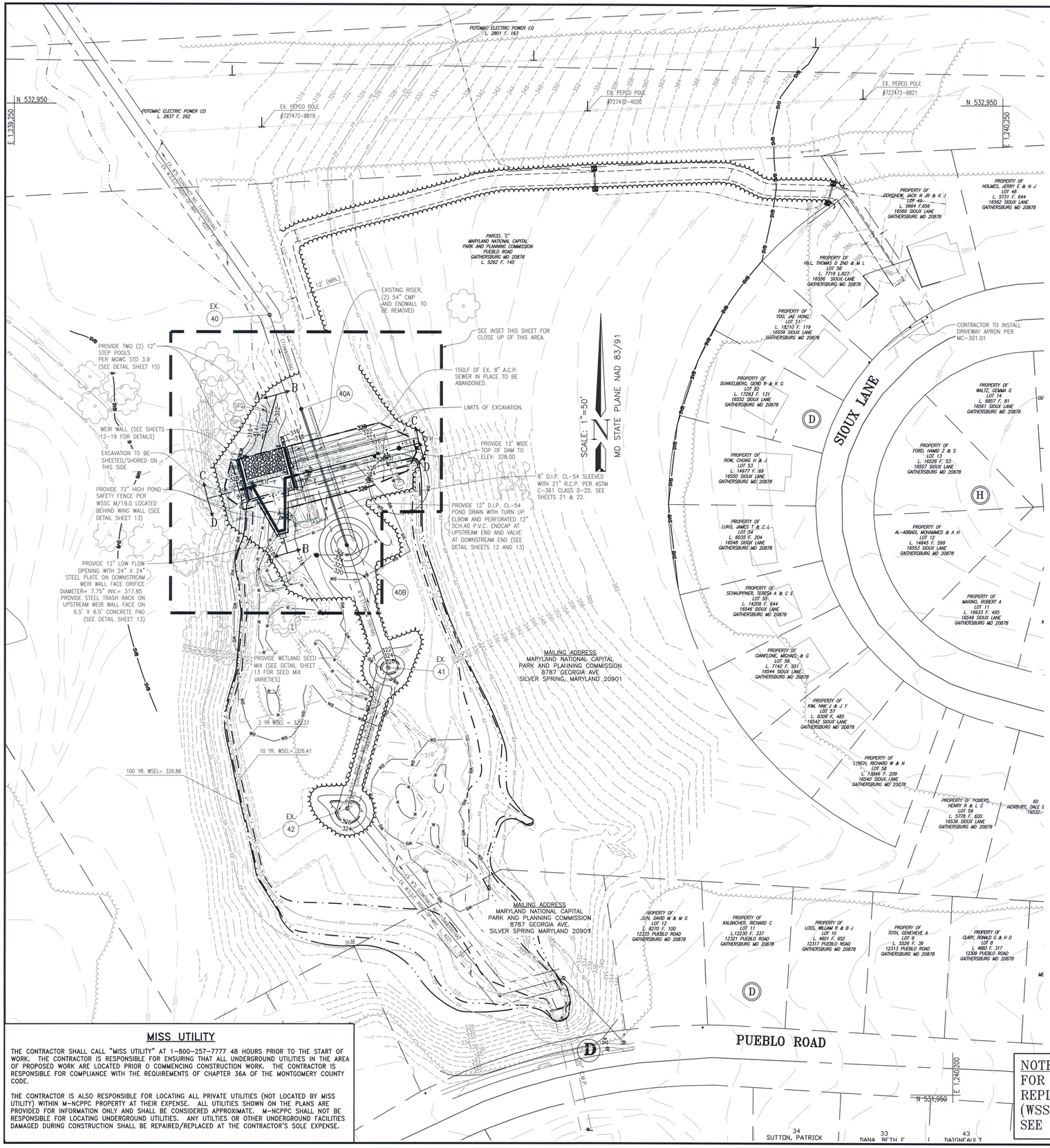

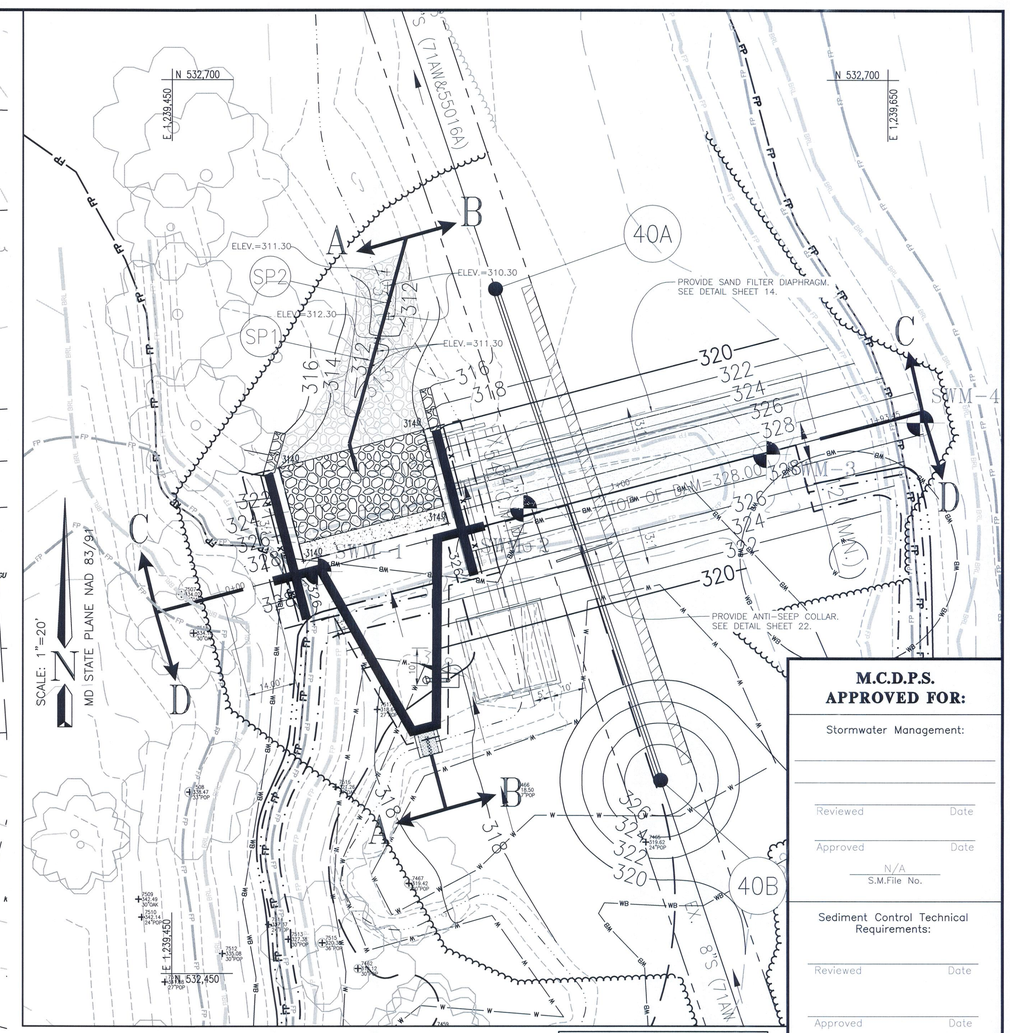

INSET

SCALE: 1"=20'

GRAPHIC SCALE

20 0 10 20 40

SCALE: 1" = 20'

GRAPHIC SCALE

50 0 25 50 100

SCALE: 1" = 50'

MISS UTILITY

THE CONTRACTOR SHALL CALL "MISS UTILITY" AT 1-800-257-7777 48 HOURS PRIOR TO THE START OF WORK. THE CONTRACTOR IS RESPONSIBLE FOR ENSURING THAT ALL UNDERGROUND UTILITIES IN THE AREA OF PROPOSED WORK ARE LOCATED PRIOR O COMMENCING CONSTRUCTION WORK. THE CONTRACTOR IS RESPONSIBLE FOR COMPLIANCE WITH THE REQUIREMENTS OF CHAPTER 36A OF THE MONTGOMERY COUNTY CODE.

THE CONTRACTOR IS ALSO RESPONSIBLE FOR LOCATING ALL PRIVATE UTILITIES (NOT LOCATED BY MISS UTILITY) WITHIN M-NCPPC PROPERTY AT THEIR EXPENSE. ALL UTILITIES SHOWN ON THE PLANS ARE PROVIDED FOR INFORMATION ONLY AND SHALL BE CONSIDERED APPROXIMATE. M-NCPPC SHALL NOT BE RESPONSIBLE FOR LOCATING UNDERGROUND UTILITIES. ANY UTILTIES OR OTHER UNDERGROUND FACILITIES DAMAGED DURING CONSTRUCTION SHALL BE REPAIRED/REPLACED AT THE CONTRACTOR'S SOLE EXPENSE.

NOTE:
FOR WSSC ABANDONMENT AND REPLACEMENT PLANS FOR 8"S, (WSSC CONTRACT NO. 08RMS699A) SEE SHEETS 21 & 22.

M.C.D.P.S. APPROVED FOR:

Stormwater Management:

Reviewed Date

Approved Date

N/A
S.M.File No.

Sediment Control Technical Requirements:

Reviewed Date

Approved Date

Administrative Requirements:

Reviewed Date

232507
SEDIMENT CONTROL PERMIT No.

NOTE

MCDPS APPROVAL OF THIS PLAN WILL EXPIRE ONE YEAR FROM THE DATE OF APPROVAL IF THE PROJECT HAS NOT STARTED UNLESS THE PERMIT HAS BEEN EXTENDED.

THIS APPROVAL DOES NOT NEGATE THE NEED OF A MCDPS ACCESS PERMIT.

THE MARYLAND-NATIONAL CAPITAL PARK AND PLANNING COMMISSION, DEPARTMENT OF PARK AND PLANNING

M-NCPPC RECORD FILE NO. _____

REVIEWED BY _____

APPROVED BY _____
CHIEF, CONSTRUCTION SECTION

DATE APPROVED _____

THIS IS NOT A PERMIT TO BEGIN CONSTRUCTION

This approval is for technical review only. For permit For permit information, contact Jay Childs, Construction Supervisor at (301)495-2574.

STORMWATER MANAGEMENT
POND MAINTENANCE
SEQUENCE NO. 826
STORMWATER MANAGEMENT POND PLAN VIEW

PUEBLO ROAD

GAITHERSBURG (9th) ELECTION DISTRICT
MONTGOMERY COUNTY, MARYLAND

CPJ Associates

Charles P. Johnson & Associates, Inc.

Civil and Environmental Engineers • Planners • Landscape Architects • Surveyors

1751 Elton Rd., Ste. 300 Silver Spring, MD 20903 301.434.7000 Fax: 301.434.9394

www.cpja.com • Gaithersburg, MD • Frederick, MD • Stevensville, MD • Fairfax, VA

STATE OF MARYLAND
DANA BETH FALLON
19908
PROFESSIONAL ENGINEER

PROFESSIONAL CERTIFICATION
I HEREBY CERTIFY THAT THESE DOCUMENTS WERE PREPARED OR APPROVED BY ME, AND THAT I AM A DULY LICENSED PROFESSIONAL ENGINEER UNDER THE LAWS OF THE STATE OF MARYLAND.

LICENSE # 19908

EXPIRATION DATE: 01/06/2017

CLIENT: Montgomery County
Department of Environmental Protection
255 Rockville Pike, Suite 120
Rockville, Maryland 20850-4166
Phone: (240) 777-7723
Contact: Mr. Gene Gopenko

PRELIMINARY PLAN NO.	N/A	SITE PLAN NO:	N/A
DESIGN	JBB	SHEET	10 OF 24
DRAFT	GC		
DATE	APRIL, 2016		
SCALE	1"/50'	FILE NO:	36-188-24.02B

COPYRIGHT © LATEST DATE HEREON CHARLES P. JOHNSON & ASSOCIATES, INC. ALL RIGHTS RESERVED. UNAUTHORIZED USE OR REPRODUCTION IS PROHIBITED.

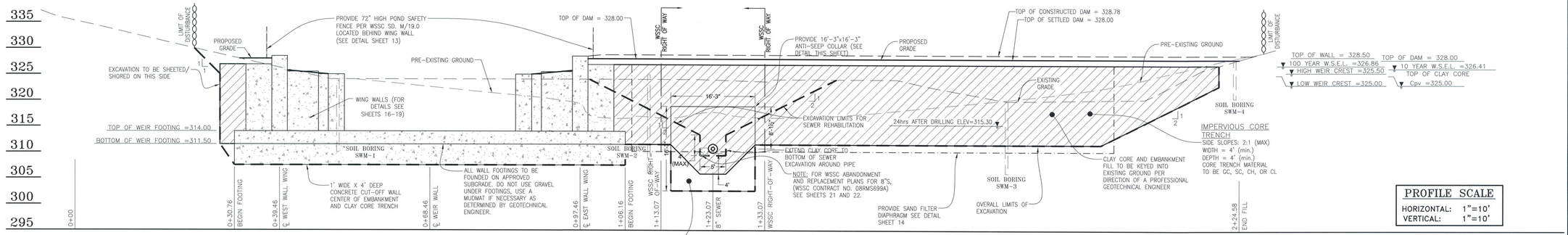

LOW FLOW WEIR AND CHANNEL SECTION C-C LOOKING DOWNSTREAM

PROFILE SCALE
HORIZONTAL: 1"=10'
VERTICAL: 1"=10'

NOTE:
ALL EMBANKMENT BACKFILL TO MEET MD-378

GRAPHIC SCALE
10 0 5 10 20
SCALE: 1" = 10'

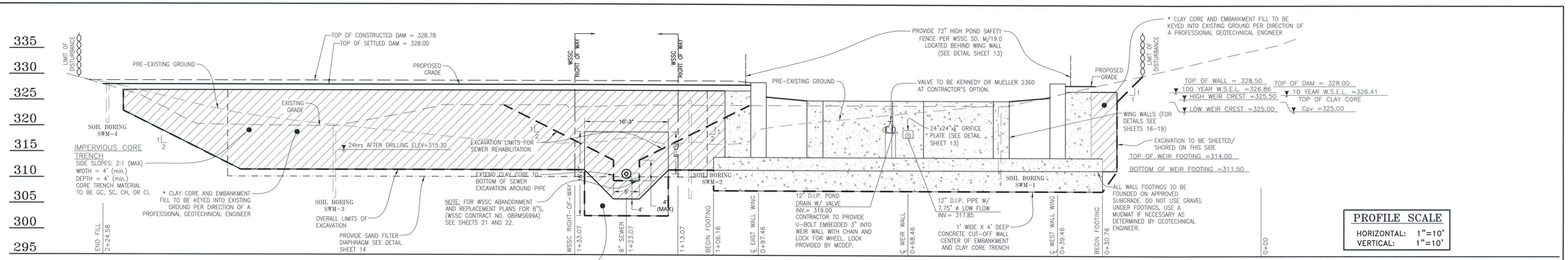

LOW FLOW WEIR AND CHANNEL SECTION D-D LOOKING UPSTREAM

NOTE:
ALL EMBANKMENT BACKFILL TO MEET MD-378

PROFILE SCALE
HORIZONTAL: 1"=10'
VERTICAL: 1"=10'

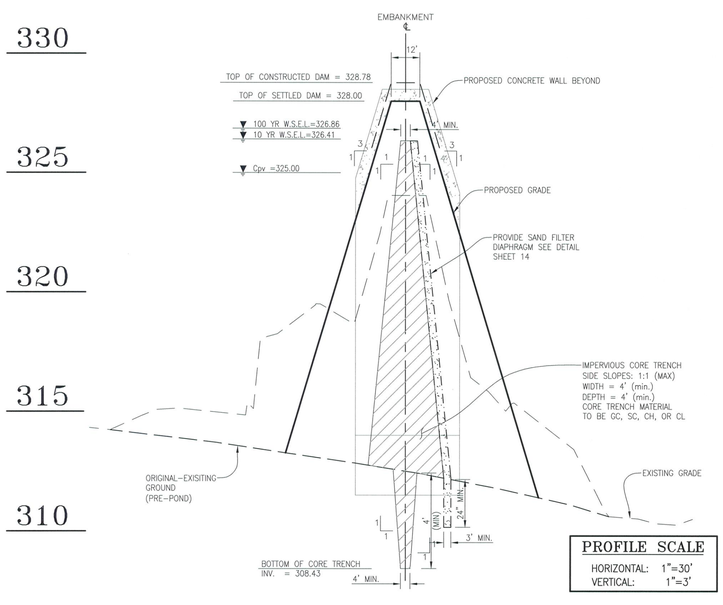

PROFILE SCALE
HORIZONTAL: 1"=30'
VERTICAL: 1"=3'

NOTE: CORE TRENCH MATERIALS SHALL BE GC, SC, CH OR CL.

GRAPHIC SCALE
30 0 15 30 60
SCALE: 1" = 30'

MISS UTILITY

THE CONTRACTOR SHALL CALL "MISS UTILITY" AT 1-800-257-7777 48 HOURS PRIOR TO THE START OF WORK. THE CONTRACTOR IS RESPONSIBLE FOR ENSURING THAT ALL UNDERGROUND UTILITIES IN THE AREA OF PROPOSED WORK ARE LOCATED PRIOR O COMMENCING CONSTRUCTION WORK. THE CONTRACTOR IS RESPONSIBLE FOR COMPLIANCE WITH THE REQUIREMENTS OF CHAPTER 36A OF THE MONTGOMERY COUNTY CODE.

THE CONTRACTOR IS ALSO RESPONSIBLE FOR LOCATING ALL PRIVATE UTILITIES (NOT LOCATED BY MISS UTILITY) WITHIN M-NCPPC PROPERTY AT THEIR EXPENSE. ALL UTILITIES SHOWN ON THE PLANS ARE PROVIDED FOR INFORMATION ONLY AND SHALL BE CONSIDERED APPROXIMATE. M-NCPPC SHALL NOT BE RESPONSIBLE FOR LOCATING UNDERGROUND UTILITIES. ANY UTILITIES OR OTHER UNDERGROUND FACILITIES DAMAGED DURING CONSTRUCTION SHALL BE REPAIRED/REPLACED AT THE CONTRACTOR'S SOLE EXPENSE.

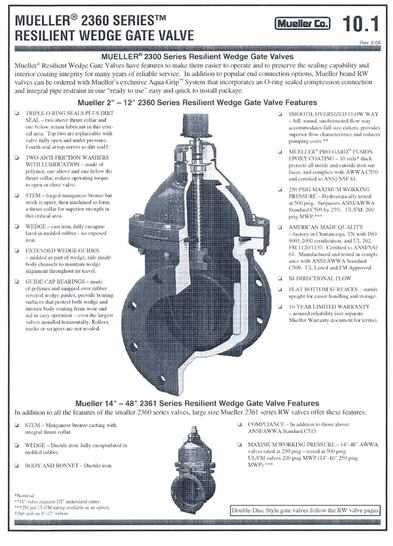

THE MARYLAND-NATIONAL CAPITAL PARK AND PLANNING COMMISSION, DEPARTMENT OF PARK AND PLANNING

M-NCPPC RECORD FILE NO. _____

REVIEWED BY _____

APPROVED BY _____
CHIEF, CONSTRUCTION SECTION

DATE APPROVED _____

THIS IS NOT A PERMIT TO BEGIN CONSTRUCTION

This approval is for technical review only. For permit For permit information, contact Jay Childs, Construction Supervisor at (301)495-2574.

M.C.D.P.S. APPROVED FOR:

Stormwater Management:

Reviewed Date

Approved Date

N/A
S.M.File No.

Sediment Control Technical Requirements:

Reviewed Date

Approved Date

Administrative Requirements:

Reviewed Date

232507
SEDIMENT CONTROL PERMIT No.

NOTE

MCDPS APPROVAL OF THIS PLAN WILL EXPIRE ONE YEAR FROM THE DATE OF APPROVAL IF THE PROJECT HAS NOT STARTED UNLESS THE PERMIT HAS BEEN EXTENDED.

THIS APPROVAL DOES NOT NEGATE THE NEED OF A MCDPS ACCESS PERMIT.

STORMWATER MANAGEMENT
POND MAINTENANCE
SEQUENCE NO. 826
STORMWATER MANAGEMENT POND PROFILES

PUEBLO ROAD

GAITHERSBURG (9th) ELECTION DISTRICT
MONTGOMERY COUNTY, MARYLAND

CPJ Associates
Charles P. Johnson & Associates, Inc.
Civil and Environmental Engineers • Planners • Landscape Architects • Surveyors
1751 Elton Rd., Ste. 300 Silver Spring, MD 20903 301.434.7000 Fax: 301.434.9394
www.cpja.com • Gaithersburg, MD • Frederick, MD • Stevensville, MD • Fairfax, VA

STATE OF MARYLAND
BRIAN KEITH DAVIS
No. 19908
PROFESSIONAL ENGINEER

PROFESSIONAL CERTIFICATION
I HEREBY CERTIFY THAT THESE DOCUMENTS WERE PREPARED OR APPROVED BY ME, AND THAT I AM A DULY LICENSED PROFESSIONAL ENGINEER UNDER THE LAWS OF THE STATE OF MARYLAND.
LICENSE # 19908
EXPIRATION DATE: 01/05/2017

CLIENT: Montgomery County
Department of Environmental Protection
255 Rockville Pike, Suite 120
Rockville, Maryland 20850-4166
Phone: (240) 777-7723
Contact: Mr. Gene Gopenko

PRELIMINARY PLAN NO. N/A		SITE PLAN NO: N/A	
DESIGN JBB	SHEET 11	OF 24	
DRAFT GC			
DATE APRIL, 2016	FILE NO: 36-188-24.02B		
SCALE AS-SHOWN			

COPYRIGHT © LATEST DATE HEREON CHARLES P. JOHNSON & ASSOCIATES, INC. ALL RIGHTS RESERVED. UNAUTHORIZED USE OR REPRODUCTION IS PROHIBITED.

Attached Xrefs: TB24x36

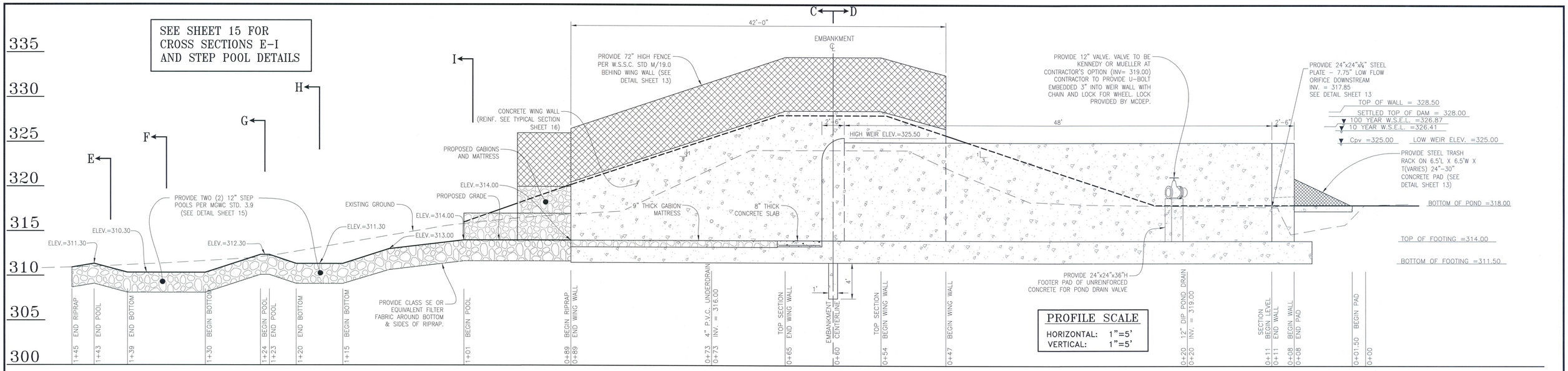

SIDE WALL PROFILE
SECTION B-B

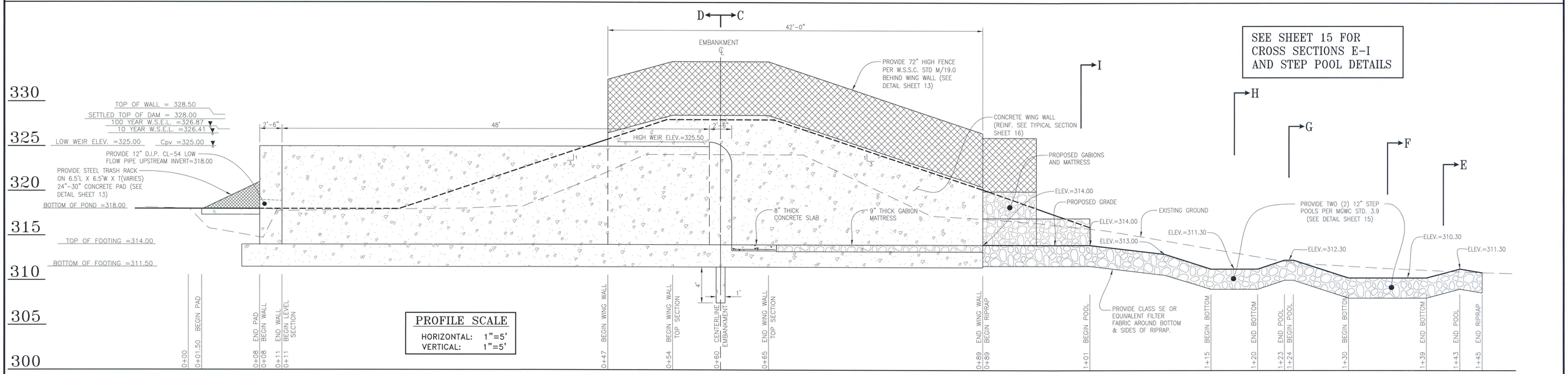

SIDE WALL PROFILE
SECTION A-A

GRAPHIC SCALE
5 0 2.5 5 10
SCALE: 1" = 5'

MISS UTILITY

THE CONTRACTOR SHALL CALL "MISS UTILITY" AT 1-800-257-7777 48 HOURS PRIOR TO THE START OF WORK. THE CONTRACTOR IS RESPONSIBLE FOR ENSURING THAT ALL UNDERGROUND UTILITIES IN THE AREA OF PROPOSED WORK ARE LOCATED PRIOR O COMMENCING CONSTRUCTION WORK. THE CONTRACTOR IS RESPONSIBLE FOR COMPLIANCE WITH THE REQUIREMENTS OF CHAPTER 36A OF THE MONTGOMERY COUNTY CODE.

THE CONTRACTOR IS ALSO RESPONSIBLE FOR LOCATING ALL PRIVATE UTILITIES (NOT LOCATED BY MISS UTILITY) WITHIN M-NCPPC PROPERTY AT THEIR EXPENSE. ALL UTILITIES SHOWN ON THE PLANS ARE PROVIDED FOR INFORMATION ONLY AND SHALL BE CONSIDERED APPROXIMATE. M-NCPPC SHALL NOT BE RESPONSIBLE FOR LOCATING UNDERGROUND UTILITIES. ANY UTILITIES OR OTHER UNDERGROUND FACILITIES DAMAGED DURING CONSTRUCTION SHALL BE REPAIRED/REPLACED AT THE CONTRACTOR'S SOLE EXPENSE.

NOTE:
FOR WSSC ABANDONMENT AND REPLACEMENT PLANS FOR 8"S, SEE WSSC CONTRACT NO. 08RMS699A OR CPJ FILE NO. 36-188-46.1

STATE OF MARYLAND
FRANK KEITH DAUBE
19908
PROFESSIONAL ENGINEER
PROFESSIONAL CERTIFICATION
I HEREBY CERTIFY THAT THESE DOCUMENTS WERE PREPARED OR APPROVED BY ME, AND THAT I AM A DULY LICENSED PROFESSIONAL ENGINEER UNDER THE LAWS OF THE STATE OF MARYLAND.
LICENSE # 19908
EXPIRATION DATE: 01/06/2017

THE MARYLAND-NATIONAL CAPITAL PARK AND PLANNING COMMISSION, DEPARTMENT OF PARK AND PLANNING

M-NCPPC RECORD FILE NO. _____
REVIEWED BY _____
APPROVED BY _____
CHIEF, CONSTRUCTION SECTION
DATE APPROVED _____

THIS IS NOT A PERMIT TO BEGIN CONSTRUCTION

This approval is for technical review only. For permit For permit information, contact Jay Childs, Construction Supervisor at (301)495-2574.

MONTGOMERY COUNTY DEPARTMENT OF PERMITTING SERVICES APPROVED FOR:

Stormwater Management:	Sediment Control Technical Requirements:	Administrative Requirements:
Reviewed Date	Reviewed Date	Reviewed Date
Approved Date	Approved Date	232507 SEDIMENT CONTROL PERMIT No.
N/A S.M.File No.		MCDPS APPROVAL OF THIS PLAN WILL EXPIRE ONE YEAR FROM THE DATE OF APPROVAL, IF THE PROJECT HAS NOT STARTED, UNLESS THE PERMIT HAS BEEN EXTENDED.

NOTE: MCDPS APPROVAL DOES NOT NEGATE THE NEED OF A MCDPS ACCESS PERMIT.

STORMWATER MANAGEMENT
POND MAINTENANCE
SEQUENCE NO. 826
STORMWATER MANAGEMENT POND PROFILES

PUEBLO ROAD

GAITHERSBURG (9th) ELECTION DISTRICT
MONTGOMERY COUNTY, MARYLAND

CPJ Associates
Charles P. Johnson & Associates, Inc.
Civil and Environmental Engineers • Planners • Landscape Architects • Surveyors
1751 Elton Rd., Ste. 300 Silver Spring, MD 20903 301.434.7000 Fax: 301.434.9394
www.cpja.com • Gaithersburg, MD • Frederick, MD • Stevensville, MD • Fairfax, VA

CLIENT: Montgomery County Department of Environmental Protection 255 Rockville Pike, Suite 120 Rockville, Maryland 20850-4166 Phone: (240) 777-7723 Contact: Mr. Gene Gopenko

PRELIMINARY PLAN NO: N/A	SITE PLAN NO: N/A	
DESIGN JBB	SHEET 12	OF 24
DRAFT GC		
DATE APRIL, 2016	FILE NO: 36-188-24.02B	
SCALE AS-SHOWN		

COPYRIGHT © LATEST DATE HEREON CHARLES P. JOHNSON & ASSOCIATES, INC. ALL RIGHTS RESERVED, UNAUTHORIZED USE OR REPRODUCTION IS PROHIBITED.

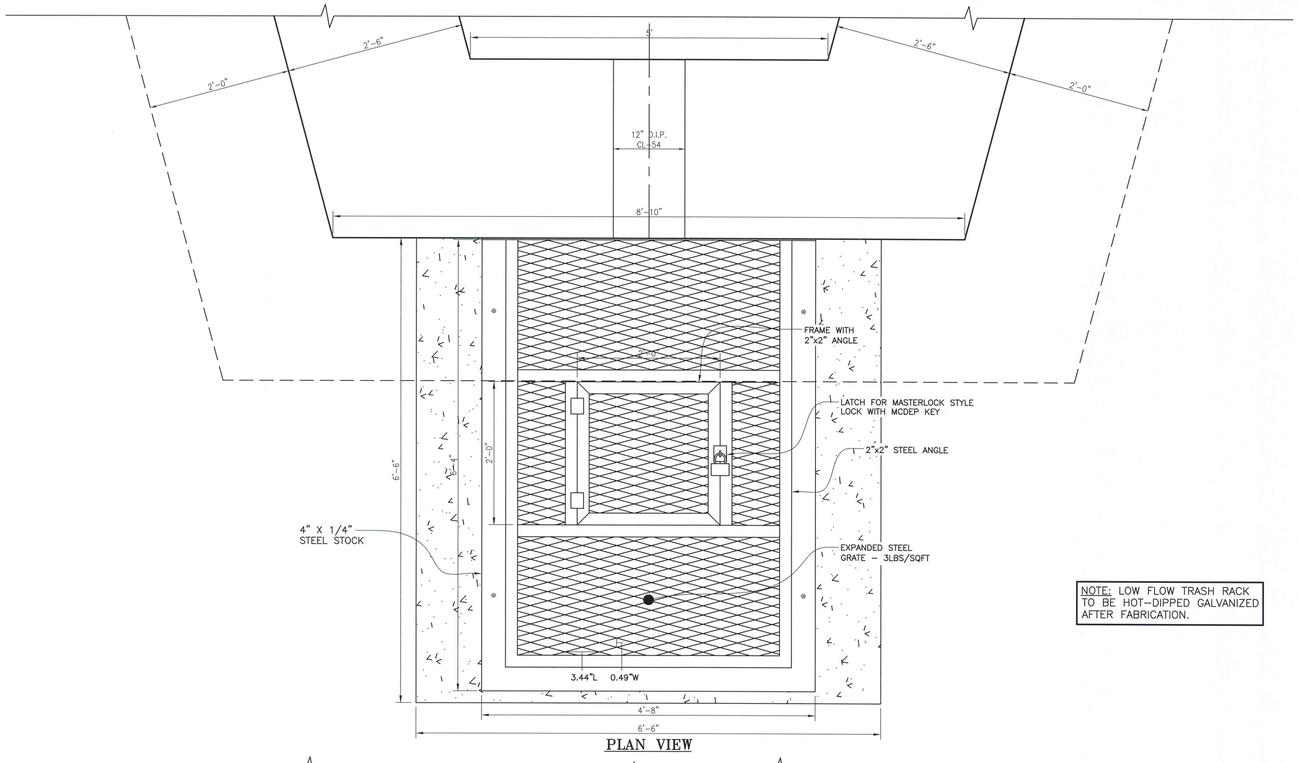

PLAN VIEW

NOTE: LOW FLOW TRASH RACK TO BE HOT-DIPPED GALVANIZED AFTER FABRICATION.

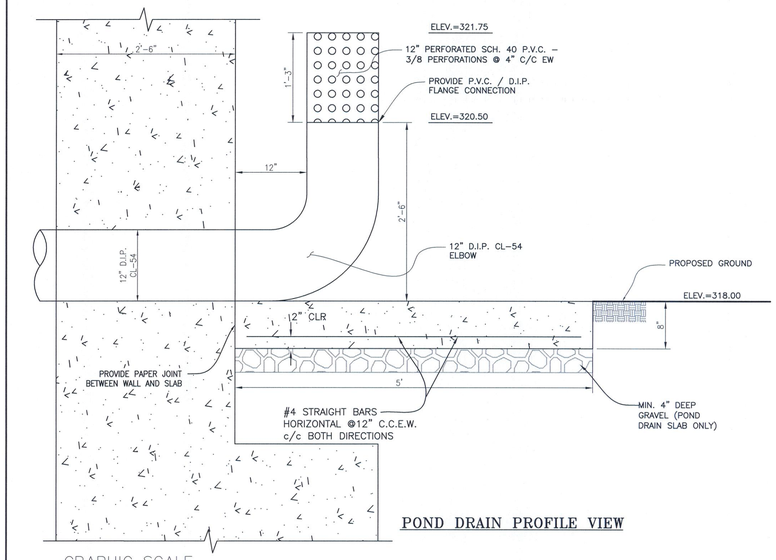

POND DRAIN PROFILE VIEW

GRAPHIC SCALE

1 0 0.5 1 2

SCALE: 1" = 1'

POND DRAIN @ WEIR WALL

SCALE: 1"=1'

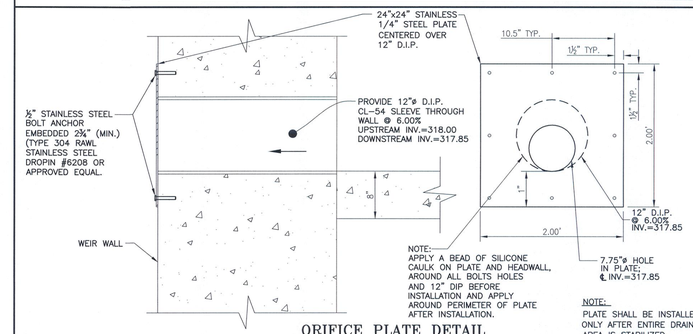

ORIFICE PLATE DETAIL

(LOCATION: WEST SIDE OF WEIR WALL)

SCALE: 1"=1'

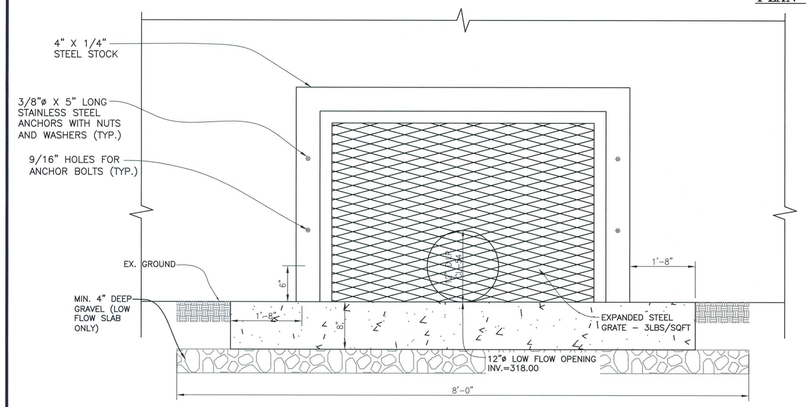

FRONT FACE VIEW

GRAPHIC SCALE

1 0 0.5 1 2

SCALE: 1" = 1'

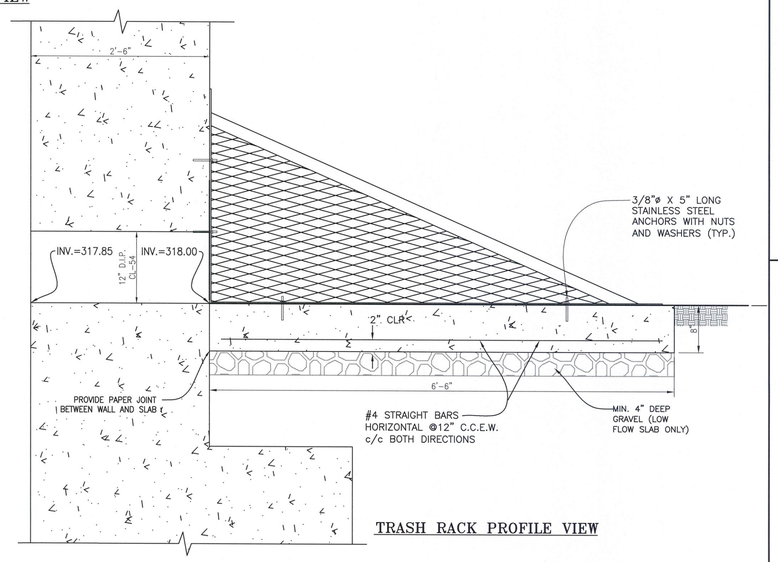

TRASH RACK PROFILE VIEW

LOW FLOW TRASH RACK @ WEIR WALL

SCALE: 1"=1'

MISS UTILITY

THE CONTRACTOR SHALL CALL "MISS UTILITY" AT 1-800-257-7777 48 HOURS PRIOR TO THE START OF WORK. THE CONTRACTOR IS RESPONSIBLE FOR ENSURING THAT ALL UNDERGROUND UTILITIES IN THE AREA OF PROPOSED WORK ARE LOCATED PRIOR O COMMENCING CONSTRUCTION WORK. THE CONTRACTOR IS RESPONSIBLE FOR COMPLIANCE WITH THE REQUIREMENTS OF CHAPTER 36A OF THE MONTGOMERY COUNTY CODE.

THE CONTRACTOR IS ALSO RESPONSIBLE FOR LOCATING ALL PRIVATE UTILITIES (NOT LOCATED BY MISS UTILITY) WITHIN M-NCPPC PROPERTY AT THEIR EXPENSE. ALL UTILITIES SHOWN ON THE PLANS ARE PROVIDED FOR INFORMATION ONLY AND SHALL BE CONSIDERED APPROXIMATE. M-NCPPC SHALL NOT BE RESPONSIBLE FOR LOCATING UNDERGROUND UTILITIES. ANY UTILITIES OR OTHER UNDERGROUND FACILITIES DAMAGED DURING CONSTRUCTION SHALL BE REPAIRED/REPLACED AT THE CONTRACTOR'S SOLE EXPENSE.

STATE OF MARYLAND
BRIAN KEITH DAVIS
19908
PROFESSIONAL ENGINEER

PROFESSIONAL CERTIFICATION
I HEREBY CERTIFY THAT THESE DOCUMENTS WERE PREPARED OR APPROVED BY ME, AND THAT I AM A DULY LICENSED PROFESSIONAL ENGINEER UNDER THE LAWS OF THE STATE OF MARYLAND.

LICENSE # 19908

EXPIRATION DATE: 01/06/2017

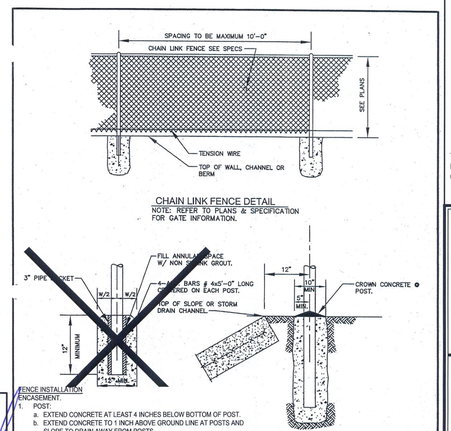

CHAIN LINK FENCE DETAIL

NOTE: REFER TO PLANS & SPECIFICATION FOR GATE INFORMATION.

FENCE INSTALLATION
ENCASEMENT.
1. POST:
   a. EXTEND CONCRETE AT LEAST 4 INCHES BELOW BOTTOM OF POST.
   b. EXTEND CONCRETE TO 1 INCH ABOVE GROUND LINE AT POSTS AND SLOPE TO DRAIN AWAY FROM POSTS.
   c. ENCASE MINIMUM 10 INCH DIAMETER FOR LINE POSTS AND 12 INCH DIAMETER FOR END, CORNER, PULL, AND GATE POSTS.
   d. COAT ALUMINUM ALLOY POSTS WITH APPROVED ZINC CHROMATE PAINT FROM BOTTOM TO 2 INCHES ABOVE CONCRETE, PRIOR TO PLACEMENT AND TOUCH UP WITH SPECIFIED ALUMINUM PAINT AFTER CONCRETE IS PLACED.
2. FENCE ENCASEMENT:
   a. 5 FEET AND LESS IN HEIGHT: MINIMUM OF 2.5 FEET DEEP.
   b. OVER 5 FEET IN HEIGHT: MINIMUM OF 3.0 FEET DEEP.

POST INSTALLATION
ALONG CHANNEL

WASHINGTON SUBURBAN SANITARY COMMISSION	APPROVED: SEP 12 2002 Chief Engineer	STANDARD DETAIL CHAIN LINK FENCE DETAILS	M 19.0

THE MARYLAND–NATIONAL CAPITAL PARK AND PLANNING COMMISSION, DEPARTMENT OF PARK AND PLANNING

M-NCPPC RECORD FILE NO. _____

REVIEWED BY _____

APPROVED BY _____
CHIEF, CONSTRUCTION SECTION

DATE APPROVED _____

THIS IS NOT A PERMIT TO BEGIN CONSTRUCTION

This approval is for technical review only. For permit For permit information, contact Jay Childs, Construction Supervisor at (301)495-2574.

M.C.D.P.S. APPROVED FOR:

Stormwater Management:

Reviewed Date

Approved Date

N/A
S.M.File No.

Sediment Control Technical Requirements:

Reviewed Date

Approved Date

Administrative Requirements:

Reviewed Date

232507
SEDIMENT CONTROL PERMIT No.

NOTE

MCDPS APPROVAL OF THIS PLAN WILL EXPIRE ONE YEAR FROM THE DATE OF APPROVAL IF THE PROJECT HAS NOT STARTED UNLESS THE PERMIT HAS BEEN EXTENDED.

THIS APPROVAL DOES NOT NEGATE THE NEED OF A MCDPS ACCESS PERMIT.

STORMWATER MANAGEMENT
POND MAINTENANCE
SEQUENCE NO. 826
STORMWATER MANAGEMENT POND DETAILS

PUEBLO ROAD

GAITHERSBURG (9th) ELECTION DISTRICT
MONTGOMERY COUNTY, MARYLAND

CPJ Associates
Charles P. Johnson & Associates, Inc.
Civil and Environmental Engineers • Planners • Landscape Architects • Surveyors
1751 Elton Rd., Ste. 300 Silver Spring, MD 20903 301.434.7000 Fax: 301.434.9394
www.cpja.com • Gaithersburg, MD • Frederick, MD • Stevensville, MD • Fairfax, VA

CLIENT: Montgomery County
Department of Environmental Protection
255 Rockville Pike, Suite 120
Rockville, Maryland 20850-4166
Phone: (240) 777-7723
Contact: Mr. Gene Gopenko

PRELIMINARY PLAN NO: N/A	SITE PLAN NO: N/A	
DESIGN JBB	SHEET 13	OF 24
DRAFT GC		
DATE APRIL, 2016	FILE NO: 36-188-24.02B	
SCALE AS-SHOWN		

COPYRIGHT © LATEST DATE HEREON CHARLES P. JOHNSON & ASSOCIATES, INC. ALL RIGHTS RESERVED, UNAUTHORIZED USE OR REPRODUCTION IS PROHIBITED.

Attached Xrefs: TB24x36

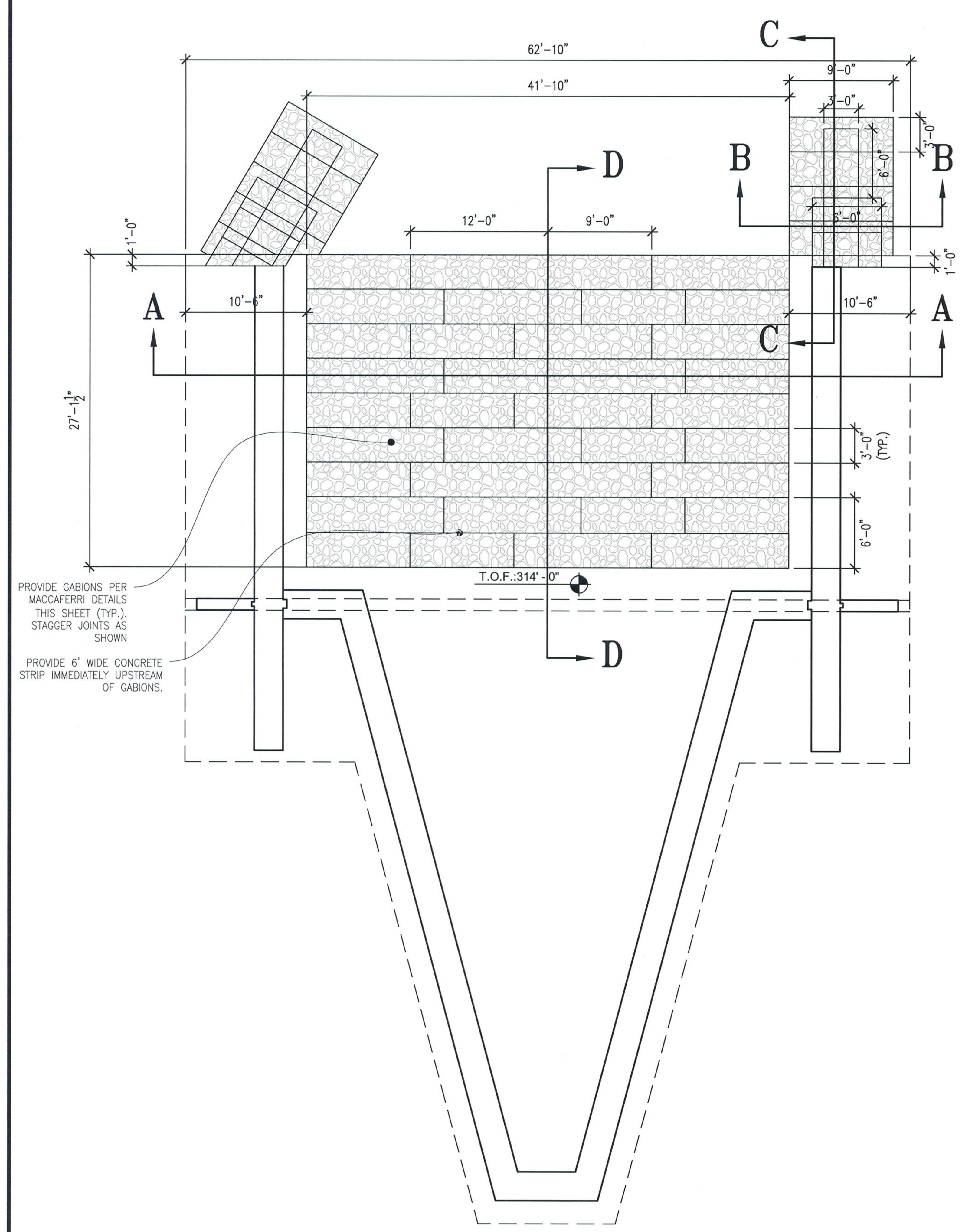

GABION PLAN VIEW

SCALE: ⅛"=1'

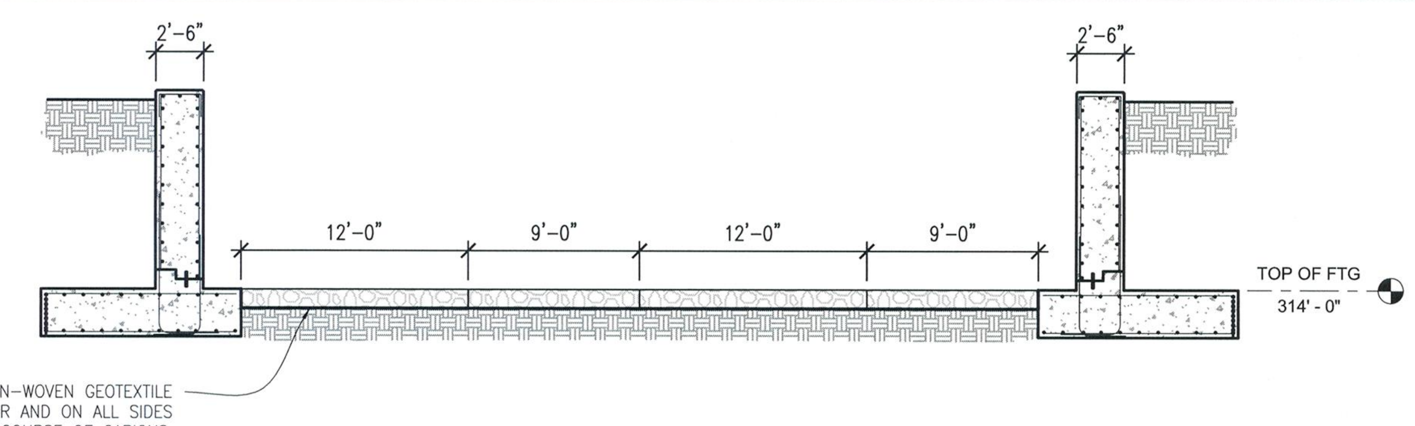

SECTION A-A

SCALE: ⅛"=1'

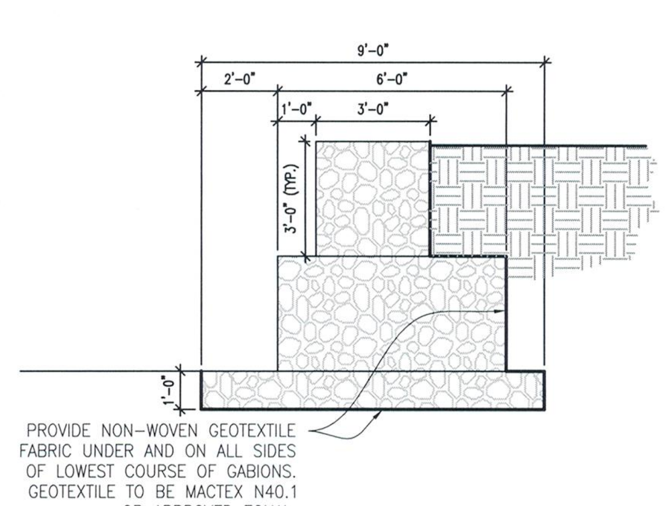

SECTION B-B

SCALE: ¼"=1'

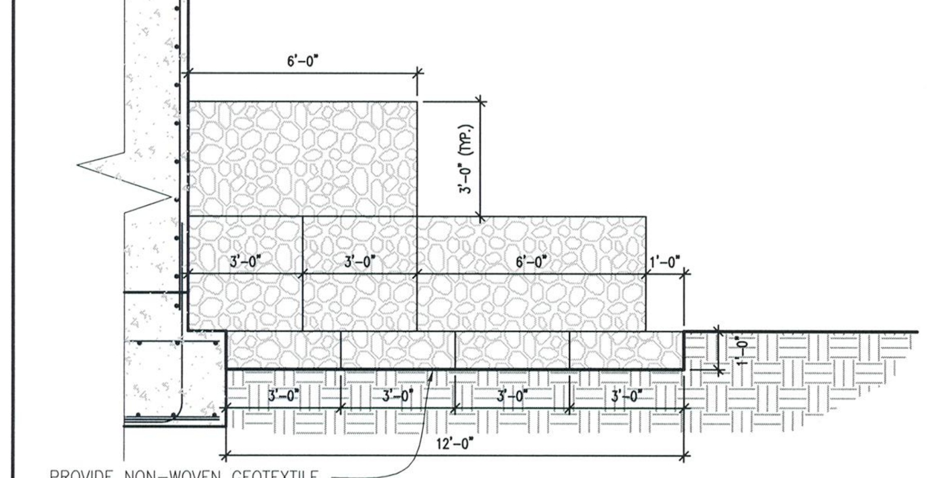

SECTION C-C

SCALE: ¼"=1'

MACCAFERRI

TECHNICAL DATA SHEET
Rev: 04, Issue Date 05.08.2015

GABION
GALVANIZED & PVC COATED

Product Description
Gabions are baskets manufactured from 8x10 double twisted hexagonal woven steel wire mesh, as per ASTM A975 (Figures 1, 2). Gabions are filled with stones at the project site to form flexible, permeable, monolithic structures such as retaining walls, channel linings, and weirs for erosion control projects. The steel wire used in the manufacture of the gabion is heavily zinc coated soft temper steel. A PVC coating is then applied to provide additional protection for use in polluted, contaminated or aggressive environments: in salt, fresh water, acid soil or wherever the risk of corrosion is present. The PVC coating has a nominal thickness of 0.02 in. (0.50 mm). The standard specifications of the mesh-wire are shown in Table 2.

The gabion is divided into cells by diaphragms positioned at approximately 3 ft (0.9 m) centers (Figure 1).

To reinforce the structure, all mesh panel edges are selvedged with a wire having a greater diameter (Table 3). Dimensions and sizes of PVC coated gabions are shown in Table 1. Gabions shall be manufactured and shipped with all components mechanically connected at the production facility.

Wire
All tests on wire must be performed prior to manufacturing the mesh. All wire should comply with ASTM A975, style 3 coating, galvanized and PVC coated steel wire. Wire used for the manufacture of gabions and the lacing wire, shall have a maximum tensile strength of 75 000 psi (515 MPa) as per ASTM A641/A641M-03, soft temper steel.

Woven Wire Mesh Type 8x10
The mesh and wire characteristics shall be in accordance with ASTM A975 Table 1, Mesh type 8x10 and PVC coated. The nominal mesh opening, D = 3.25 in. (83 mm) as per Figure 2. The minimum mesh properties for strength and flexibility should be in accordance with the following:
Mesh Tensile Strength shall be a minimum of 3425 lb/ft (50.0 kN/m) when tested in accordance with ASTM A975 section 13.1.1.
Punch Test resistance shall be a minimum of 5300 lb (23.6 kN) when tested in compliance with ASTM A975 section 13.1.4.
Connection to Selvedges shall be 1200 lb/ft (17.5 kN/m) when tested in accordance with ASTM A975.

P.V.C. (Polyvinyl Chloride) Coating
The technical characteristics and the resistance of the PVC to aging should meet the relevant standards. The main values for the PVC material are as follows:
The initial property of the PVC coating shall be in compliance with ASTM A975 section 8.2.
Prior to UV and abrasion degradation, the PVC polymer coating shall have a projected minimum durability of 69 years when tested in accordance with *UL 746B Polymeric Material-Long Term Property Evaluation* for heat aging test.

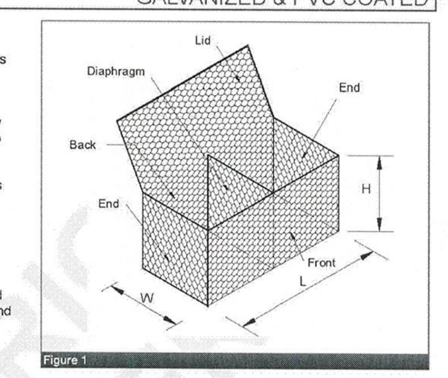

Figure 1

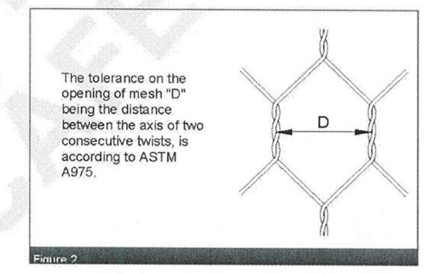

Figure 2

Lacing, Assembly and Installation
Gabion units are assembled and connected to one another using lacing wire specified in Table 3 and described in Figure 3. MacTie preformed stiffeners or lacing wire can be used as internal connecting wires when a structure requires more than one layer of gabions to be stacked on top of each other. Internal connecting wires with lacing wire shall connect the exposed face of a cell to the opposite side of the cell. Internal connecting preformed stiffeners shall connect the exposed face of a cell to the adjacent side of the cell. Preformed stiffeners are installed at 45° to the face/side of the unit, extending an equal distance along each side to be braced (approximately 1 ft. (300 mm)). An exposed face is any side of a gabion cell that will be exposed or unsupported after the structure is completed.
Stainless steel ring fasteners can be used instead of, or to complement, the lacing wire (Figure 4).

MACCAFERRI

Maccaferri reserves the right to amend product specifications without notice and specifiers are requested to check as to the validity of the specifications they are using.

Table 1 - Sizes for gabions			
L=Length ft (m)	W=Width ft (m)	H=Height ft (m)	# of cells
6 (1.8)	3 (0.9)	3 (0.9)	2
9 (2.7)	3 (0.9)	3 (0.9)	3
12 (3.6)	3 (0.9)	3 (0.9)	4
6 (1.8)	3 (0.9)	1.5 (0.45)	2
9 (2.7)	3 (0.9)	1.5 (0.45)	3
12 (3.6)	3 (0.9)	1.5 (0.45)	4
6 (1.8)	3 (0.9)	1 (0.3)	2
9 (2.7)	3 (0.9)	1 (0.3)	3
12 (3.6)	3 (0.9)	1 (0.3)	4
4.5 (1.4)	3 (0.9)	3 (0.9)	1
12 (3.6)**	6 (1.8)	1 (0.3)	4

**This Gabion has 6'X 3' cells. All sizes and dimensions are nominal. Tolerances of ± 5% of the length, width, and height of the gabions shall be permitted.

Table 2 - Standard mesh-wire				
Type	D in. (mm)	Tolerance	Internal Wire Dia in. (mm)	External Wire Dia in. (mm)
8x10/ ZN+PVC	3.25 (83)	±10%	0.106 (2.70)	0.146 (3.70)

Table 3 - Standard wire diameters	Lacing Wire	Mesh Wire	Selvedge Wire / Preformed Stiffeners
Mesh Wire Diameter ø in. (mm)	0.087 (2.2)	0.106 (2.7)	0.134 (3.4)
Wire Tolerance (±) ø in. (mm)	0.004 (0.10)	0.004 (0.10)	0.004 (0.10)
Minimum Quantity/Zinc oz/ft² (g/m²)	0.70 (214)	0.80 (244)	0.85 (259)
Wire+PVC diameter in. (mm)	0.127 (3.20)	0.146 (3.70)	0.174 (4.40)

Stainless steel rings for PVC coated gabions shall be in accordance with ASTM A975 section 6.3.

Spacing of the rings shall be in accordance with ASTM A975 Table 2, Panel to Panel connection, Pull-Apart Resistance. In any case, ring fasteners spacing shall not exceed 6 in. (150 mm) (Figure 3).

The rings can be installed using pneumatic or manual tools (Figure 5).
For full details, please see the Gabion Product Installation Guide.

The average maximum resistance of the fasteners from the field shall not be lower than 90% of the resistance provided in the certification.

Quantity Request
When requesting a quotation, please specify:
- Number of units,
- Size of units (length x width x height, see Table 1),
- Type of mesh,
- Type of coating.

EXAMPLE: No. 100 gabions, 6x3x3, Mesh type 8x10, Wire diameter 0.106 in. (2.70 mm), Galvanized + PVC coated.

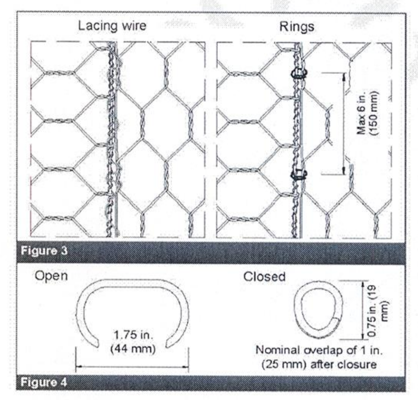

Figure 3

Figure 4

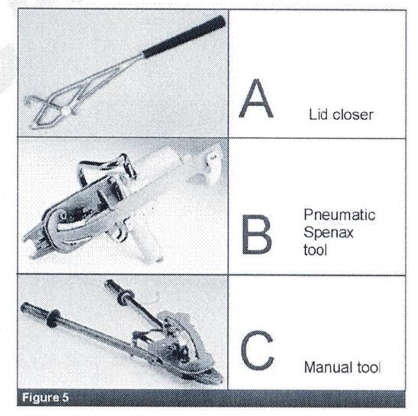

Figure 5

Maccaferri, Inc.
10303 Governor Lane Blvd., Williamsport, MD 21795
Tel. (800) 638-7744 - Fax (301) 223-4590
E-mail: info@maccaferri-usa.com - Web site: www.maccaferri-usa.com

Area Offices:
Phoenix, Arizona
Sacramento, California
Miami, Florida
St. Louis, Missouri
Trenton, New Jersey
Albuquerque, New Mexico
Caguas, Puerto Rico
Dallas/Ft. Worth, Texas

© 2015 Maccaferri. All rights reserved. Maccaferri will enforce Copyright

MACCAFERRI

PRODUCT INSTALLATION GUIDE
Rev: 02, Issue Date 04.01.2012

GABION

Material Delivery
Gabions are manufactured with all components mechanically connected at the production facility, as per ASTM A975. All gabions are supplied in the collapsed form, either folded and bundled or rolled. The bundles are compressed and strapped together at the factory for easy shipping and handling. Lacing wire is shipped in coils. Fasteners are shipped in boxes. Preformed corner stiffeners are shipped in boxes.

Assembly
Open and unfold each gabion on a flat, hard surface and remove any shipping fold if necessary. This can be done by placing the fold over a 2" x 4" board and walking along the sides. Lift up the sides, ends and diaphragms into a vertical position to form an open box shape (Fig. 1).
Connect the back and the front panels of the gabion to the end panels and center diaphragms. The top corner of the end panels and center diaphragms have the selvedge wire extending out approximately 4 in. (102 mm) from these panel edges. Raise the end panels and the diaphragms to a vertical position and wrap the selvedge wire around the edge wire of the top and back panels.
Connect the edges of the gabion and diaphragms by using either lacing wire or ring fasteners (Fig. 2). Ring fasteners shall not be spaced more than 6 in. (150 mm) apart. The procedure for using lacing wire consists of cutting a sufficient length of wire, and first looping and/or twisting the lacing wire to the wire mesh. Proceed to lace with alternating double and single loops through every mesh opening approximately every 6 in. (150 mm) pulling each loop tight and finally securing the end of the lacing wire to the wire mesh by looping and/or twisting. The use of pliers to aid assembly and tying of the units using the lacing wire supplied with the gabions is normally recommended.
Erect the diaphragms into the vertical position, and tie them to the side panels in the same manner.

Fastening Procedure
When using lacing wire, cut off a piece of wire approximately 1.5 times the length of the edge to be tied. Longer edges shall be joined by several lengths of wire. Tie wires shall be secured around the selvedge wire or heavier edge wire, where present, by looping and twisting the lacing wire around itself. Proceed tying with alternate double and single loops. Double loops shall be made at intervals not greater than 6 in. (150 mm). The baskets should be pulled tightly together during the tying operation. The other end of the tie wire shall be secured by again looping and twisting the wire around itself. When using lacing wire to assemble the units, pliers may be used to create tight joints. Care should be taken to avoid damaging the wire coating.
When steel ring fasteners are used, the use of either a mechanical or a pneumatic fastening tool is required. Spacing of the rings shall be in accordance with ASTM A975 Table 2, Panel to Panel connection, Pull-Apart Resistance. In any case, ring fasteners spacing shall not exceed 6 in. (150 mm). Rings shall be installed at the end and center diaphragms and along all edges. Care should be taken to ensure the steel ring fastener is completely closed after installation. When this is not possible, connection must be complemented with lacing wire.

Foundation Preparation
The foundation on which the gabions are to be placed shall be level, and graded to the elevations as shown on the project construction drawings. The foundation for gabions shall be level, smooth, and free of surface irregularities, loose material, and vegetation in accordance with the project specifications. Appropriate measures shall be taken for filtering and drainage of the foundation, as per the project specifications (filter cloth, drain works, etc.). Geotextiles required to be installed behind gabion structures shall comply with the requirements for subsurface drainage applications.

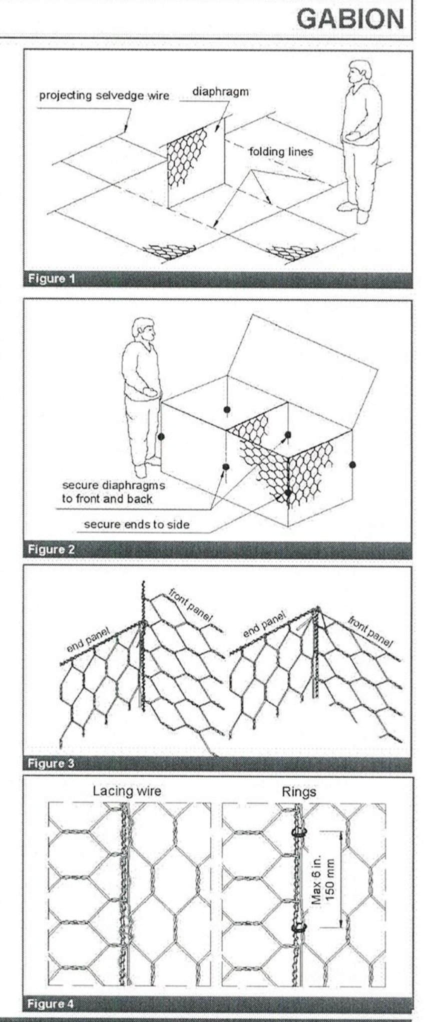

MACCAFERRI

Maccaferri reserves the right to amend product specifications without notice and specifiers are requested to check as to the validity of the specifications they are using.

Installation and Filling
After the foundation has been prepared, the pre-assembled gabions are placed in the desired location to form the structure. Gabions shall be connected together and aligned before filling the baskets with rock. All connections (panel-to-panel and basket-to-basket) shall be already carried out as described in the assembly operations.
Rocks for gabions may be produced by any suitable quarrying method, and by the use of any device that yields the required sizes within the gradation limits chosen. Rocks shall be hard, angular to round, durable and of such quality that they shall not disintegrate on exposure to water or weathering during the life of the structure.
Gabion rocks shall range between 4-8 in. (100-200 mm). The range in sizes may allow for a variation of 5% oversize and/or 5% undersize rock, provided it is not placed on the gabion's exposed surface. In all cases, the oversize rock shall not be larger than 10 in. (250 mm), and the undersize rock shall not be smaller than 2 in. (50 mm).
During the filling operation some manual stone placement is required to minimize voids. The exposed faces of vertical structures may be carefully hand placed to give a neat, flat, and compact appearance. The cells shall be filled in stages so that local deformation may be avoided. That is, at no time, shall any cell be filled to a depth exceeding 1 ft (300 mm) higher than the adjoining cell (Fig. 7). When using PVC gabions, care should be taken when placing the stone to assure that the PVC coating on gabions will not be damaged.
Stiffeners or crossties shall be installed as indicated (Fig. 6), fixed at 1/3 and 2/3 of the height for 3 ft or 1 m gabions as the cell is being filled. In 1.5 ft (500 mm) high units stiffeners may be fixed at the half height level, if required. Preformed corner stiffeners are installed at 45° to the face/side of the unit, extending an equal distance along each side being braced (approximately 1 ft [300 mm]). Minimize the number of voids by using a well-graded stone and avoid large stones in order to achieve a dense, compact stone fill. All corners should be securely connected to the neighboring gabions of the same layer before filling the units.
When more than one layer of gabions is required, in order for the individual units to become incorporated into one continuous structure, the next layer of gabions must be connected to the layer underneath after this layer has been securely closed (Fig. 8).
Gabion should be front to front and back to back, so that pairs of facing lids can be wired down in one process.
Secure the end from which the work is to start, by partially filling the end unit with rock.

Closing
To allow for settlement, level off the fill 1-1.5 in. (25-40 mm) above the top of the mesh. In slow protection aprons downstream of weirs and places where water will fall directly on the gabions, install bracing wires vertically between the top and bottom mesh. Be sure to keep the top edge of the diaphragm exposed. Fold the lid down and pull the edges of the panels to be connected using an appropriate tool such as a lid closer (Fig. 9). The lids shall be tightly laced along all edges, ends and diaphragms in the same manner as described for assembling units (Fig. 4). Adjacent lids may be securely attached simultaneously. All end wires should then be turned in to avoid protrusions.

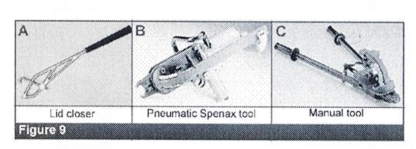

Figure 9

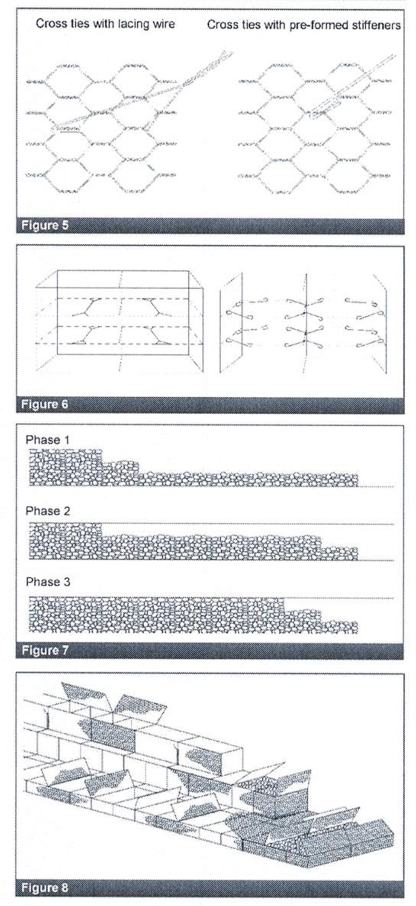

MACCAFERRI
www.maccaferri-usa.com
Headquarters:
10303 Governor Lane Boulevard
Williamsport, MD 21795-3116
Tel: 800-638-7744
Fax: 301-223-4356
email: info@maccaferri-usa.com

MACCAFERRI INC. Area Offices:
AZ, Phoenix · MO, St. Louis · PR, Caguas
CA, Sacramento · NJ, Iselin · TX, Lewisville
FL, Coral Gables · NM, Albuquerque · WA, Seattle
MD, Williamsport · OH, Columbus

©2012 Maccaferri, Inc. Printed in USA

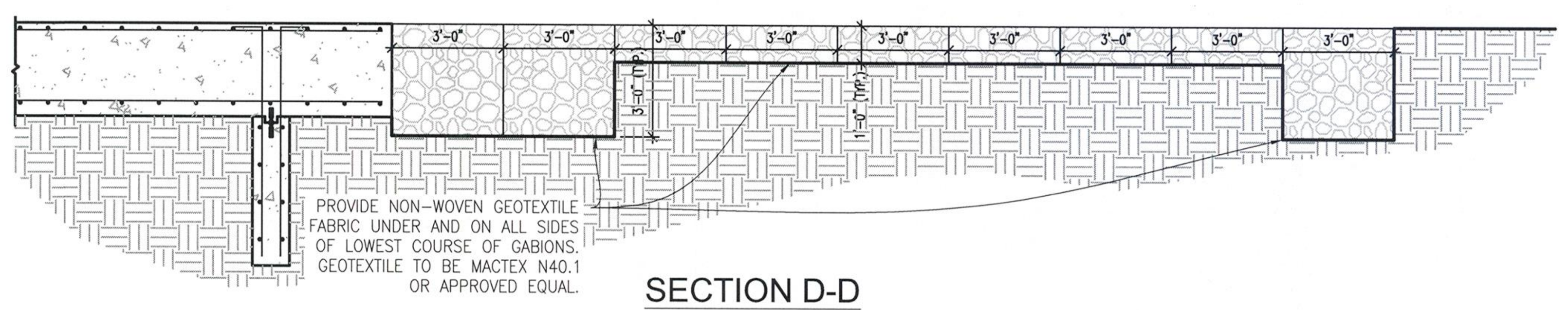

SECTION D-D

SCALE: ¼"=1'

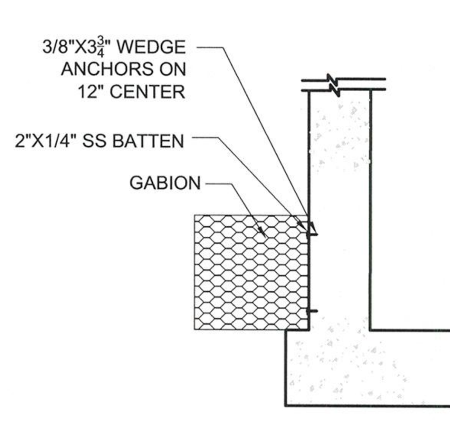

GABION TO CONCRETE WALL CONNECTION

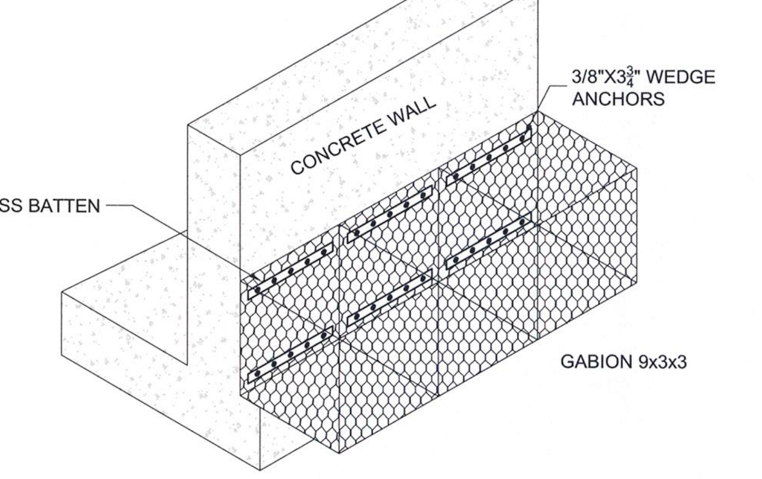

ISOMETRIC VIEW

GABION ANCHORING DETAIL

CONSTRUCTION NOTES FOR MACCAFERRI PVC COATED GABION STRUCTURES

1. PRODUCT DESCRIPTION

1.1. PVC GABIONS ARE BASKETS MANUFACTURED FROM 8X10 DOUBLE TWISTED HEXAGONAL WOVEN STEEL WIRE MESH, HEAVILY GALVANIZED THEN PVC COATED, AS PER ASTM A975-11 (**FIGS. 1 - 4**). GABIONS ARE FILLED WITH STONES AT THE PROJECT SITE TO FORM FLEXIBLE, PERMEABLE, MONOLITHIC STRUCTURES SUCH AS RETAINING WALLS, CHANNEL LININGS, AND WEIRS FOR EROSION CONTROL PROJECTS. THE STEEL WIRE USED IN THE MANUFACTURE OF THE GABION IS HEAVILY GALVANIZED SOFT TEMPER STEEL. THE STANDARD SPECIFICATIONS FOR MESH-WIRE ARE SHOWN IN **TABLE 2**. THE GABION IS DIVIDED INTO CELLS BY DIAPHRAGMS POSITIONED AT APPROXIMATELY 3 ft (0.9m) CENTERS (**FIG. 2**). TO REINFORCE THE STRUCTURE, ALL MESH PANEL EDGES ARE SELVEDGED WITH A WIRE HAVING A GREATER DIAMETER (**TABLE 3**). DIMENSIONS AND SIZES OF PVC COATED GABIONS ARE SHOWN IN **TABLE 1**. GABIONS SHALL BE MANUFACTURED AND SHIPPED WITH ALL COMPONENTS MECHANICALLY CONNECTED AT THE PRODUCTION FACILITY.

2. MATERIALS

2.1. BACKFILL MATERIAL SPECIFIED BELOW SHALL BE FREE DRAINING. BACKFILL MATERIALS SHALL BE APPROVED BY THE OWNER OR OWNER'S REPRESENTATIVE, AND SHALL MEET THE PHYSICAL PROPERTIES REQUIREMENTS DEFINED IN **SECTION 7.1**, AND SHALL BE CLEAN, FREE DRAINING CRUSHED STONE.

2.2. COBBLES MATERIAL SHALL BE A CLEAN CRUSHED STONE OR GRANULAR FILL MEETING THE FOLLOWING GRADATION PER ASTM D 422:

Table 0 Rock Sizing for Gabions	
Sieve Size	Percent Passing
8"	100%
4"	0 to 5%

2.3. GABION WALL UNITS SHALL BE GALVANIZED THEN PVC COATED 8x10 HEXAGONAL DOUBLE TWIST WIRE MESH TYPE AS PER ASTM A975-11.

Table 1 Sizes for Gabions			
L=Length ft (m)	W=Width ft (m)	H=Height ft (m)	# of Cells
6 (1.8)	3 (0.9)	3 (0.9)	2
9 (2.7)	3 (0.9)	3 (0.9)	3
12 (3.6)	3 (0.9)	3 (0.9)	4
6 (1.8)	3 (0.9)	1 (0.3)	2
9 (2.7)	3 (0.9)	1 (0.3)	3
12 (3.6)	3 (0.9)	1 (0.3)	4

Table 2 Standard Galvanized Mesh Wire			
Mesh Type	"D" in (mm)	Tolerance	Wire Dia. in (mm)
8x10/ Galvanized + PVC	3.25 (83)	±10%	0.106 (2.70) 0.146 (3.70)

Table 3 Standard Wire Diameters	Lacing Wire	Mesh Wire	Selvedge Wire / Preformed Stiffeners
Wire Diameter Int. Ø in (mm)	0.087 (2.20)	0.106 (2.70)	0.134 (3.4)
Wire Tolerance (±) ø in (mm)	0.004 (0.10)	0.004 (0.10)	0.004 (0.10)
Min. Zinc Qty. oz/ft² (g/m²)	0.70 (214)	0.80 (244)	0.85 (259)
Wire + PVC Ext. Ø in (mm)	0.127 (3.20)	0.146 (3.70)	0.174 (4.4)

2.4. WIRE -- ALL TESTS ON WIRE MUST BE PERFORMED PRIOR TO MANUFACTURING THE MESH. ALL WIRE SHALL COMPLY WITH ASTM A975-11. WIRE USED FOR THE MANUFACTURE OF GABIONS AND THE LACING WIRE, SHALL HAVE A MAXIMUM TENSILE STRENGTH OF 75,000 psi (515 MPa) AS PER ASTM A641/A641M-03, SOFT TEMPER STEEL.

2.5. WOVEN WIRE MESH TYPE 8X10 -- THE MESH AND WIRE CHARACTERISTICS SHALL BE IN ACCORDANCE WITH ASTM A975-11 *TABLE 1*, MESH TYPE 8X10. THE NOMINAL MESH OPENING D = 3.25 in. (83 mm) (**FIG. 11a & 11b**). THE MINIMUM MESH PROPERTIES FOR STRENGTH AND FLEXIBILITY SHALL BE IN ACCORDANCE WITH THE FOLLOWING: MESH TENSILE STRENGTH SHALL BE 2900 lb/ft (43.3 kN/m) MINIMUM WHEN TESTED IN ACCORDANCE WITH ASTM A975-11 SECTION 13.1.1. PUNCH TEST RESISTANCE SHALL BE A MINIMUM OF 5300 lb (23.6 kN) WHEN TESTED IN COMPLIANCE WITH ASTM A975-11 SECTION 13.1.4 . CONNECTION TO SELVEDGES SHALL BE 1200 lb/ft (17.5 kN/m) WHEN TESTED IN ACCORDANCE WITH ASTM A975-11.

3. FOUNDATION PREPARATION

3.1. THE FOUNDATION ON WHICH THE GABIONS ARE TO BE PLACED SHALL BE LEVEL, AND GRADED TO THE ELEVATIONS AS SHOWN ON THE PROJECT CONSTRUCTION DRAWINGS. THE FOUNDATION FOR GABIONS SHALL BE LEVEL, SMOOTH, AND FREE OF SURFACE IRREGULARITIES, LOOSE MATERIAL, AND VEGETATION, IN ACCORDANCE WITH THE PROJECT SPECIFICATIONS. APPROPRIATE MEASURES SHALL BE TAKEN FOR FILTERING AND DRAINAGE OF THE FOUNDATION, AS PER THE PROJECT SPECIFICATIONS (FILTER CLOTH, DRAIN WORKS, ETC.). GEOTEXTILES REQUIRED TO BE INSTALLED BEHIND GABION STRUCTURES SHALL COMPLY WITH THE REQUIREMENTS FOR SUBSURFACE DRAINAGE APPLICATIONS.

4. CONSTRUCTION

4.1. ASSEMBLY -- OPEN AND UNFOLD EACH GABION ON A FLAT, HARD SURFACE AND REMOVE ANY SHIPPING FOLDS IF NECESSARY. THIS CAN BE DONE BY PLACING THE FOLD OVER A 2" X 4" BOARD AND WALKING ALONG THE SIDES. LIFT UP THE SIDES, ENDS AND DIAPHRAGMS INTO A VERTICAL POSITION TO FORM AN OPEN BOX SHAPE (**FIG. 3**). CONNECT THE EDGES OF THE GABION AND DIAPHRAGMS BY USING EITHER LACING WIRE OR RING FASTENERS (**FIG. 5a & 5b**) THE USE OF PLIERS TO AID ASSEMBLY AND TYING OF THE UNITS USING THE LACING WIRE SUPPLIED WITH THE GABIONS IS NORMALLY RECOMMENDED.

4.2. FASTENING PROCEDURE -- WHEN USING LACING WIRE, CUT OFF A PIECE OF WIRE APPROXIMATELY 1.5 TIMES THE LENGTH OF THE EDGE TO BE TIED. LONGER EDGES SHALL BE JOINED BY SEVERAL LENGTHS OF WIRE. TIE WIRES SHALL BE SECURED AROUND THE SELVEDGE WIRE OR HEAVIER EDGE WIRE, WHERE PRESENT, BY LOOPING AND TWISTING THE LACING WIRE AROUND ITSELF. PROCEED TYING WITH ALTERNATE DOUBLE AND SINGLE LOOPS. DOUBLE LOOPS SHALL BE MADE AT INTERVALS NOT GREATER THAN 6 in. (150 mm). PULL BASKETS TIGHTLY TOGETHER DURING THE TYING OPERATION. THE OTHER END OF THE TIE WIRE SHALL BE SECURED BY AGAIN LOOPING AND TWISTING THE WIRE AROUND ITSELF. WHEN STEEL RING FASTENERS ARE USED, THE USE OF EITHER A MECHANICAL OR A PNEUMATIC FASTENING TOOL IS REQUIRED. SPACING OF THE RINGS SHALL BE IN ACCORDANCE WITH ASTM A975-11, *TABLE 2 Minimum Strength Requirements of Mesh and Connections.* IN ANY CASE, RING FASTENERS SPACING SHALL NOT EXCEED 6 in. (150 mm). RINGS SHALL BE INSTALLED AT THE END AND CENTER DIAPHRAGMS AND ALONG ALL EDGES. CARE SHALL BE TAKEN TO ENSURE THE STEEL RING FASTENER IS COMPLETELY CLOSED AFTER INSTALLATION.

4.3. INSTALLATION AND FILLING -- GABIONS SHALL BE CONNECTED TOGETHER AND ALIGNED BEFORE FILLING THE BASKETS WITH ROCK. ROCKS FOR GABIONS MAY BE PRODUCED BY ANY SUITABLE QUARRYING METHOD, AND BY THE USE OF ANY DEVICE THAT YIELDS THE REQUIRED SIZES WITHIN THE GRADATION LIMITS CHOSEN. ROCKS SHALL BE HARD, ANGULAR TO ROUND, DURABLE AND OF SUCH QUALITY THAT THEY SHALL NOT DISINTEGRATE ON EXPOSURE TO WATER OR WEATHERING DURING THE LIFE OF THE STRUCTURE. GABION ROCKS SHALL RANGE BETWEEN 4-8 in. (100-200 mm). THE RANGE IN SIZES MAY ALLOW FOR A VARIATION OF 5% OVERSIZE AND/OR 5% UNDERSIZE ROCK, PROVIDED IT IS NOT PLACED ON THE GABION'S EXPOSED SURFACE. IN ALL CASES, THE OVERSIZE ROCK SHALL NOT BE LARGER THAN 10 in. (250 mm), AND THE UNDERSIZE ROCK SHALL NOT BE SMALLER THAN 2 in. (50 mm). DURING THE FILLING OPERATION SOME MANUAL STONE PLACEMENT IS REQUIRED TO MINIMIZE VOIDS. THE EXPOSED FACES OF VERTICAL STRUCTURES MAY BE CAREFULLY HAND PLACED TO GIVE A NEAT, FLAT, AND COMPACT APPEARANCE. THE CELLS SHALL BE FILLED IN STAGES SO THAT LOCAL DEFORMATION MAY BE AVOIDED. THAT IS, AT NO TIME, SHALL ANY CELL BE FILLED TO A DEPTH EXCEEDING 1 ft (300 mm) HIGHER THAN THE ADJOINING CELL (**FIG. 14a - 14c**). STIFFENERS OR CROSSTIES SHALL BE INSTALLED AS INDICATED (**FIGS. 12a & 12b, 13a & 13b**) , FIXED AT 1/3 AND 2/3 OF THE HEIGHT FOR 3 ft OR 1m GABIONS AS THE CELL IS BEING FILLED. IN 1.5 ft (500 mm) HIGH UNITS STIFFENERS MAY BE FIXED AT THE HALF HEIGHT LEVEL, IF REQUIRED. PREFORMED CORNER STIFFENERS ARE INSTALLED AT 45° TO THE FACE/SIDE OF THE UNIT, EXTENDING AN EQUAL DISTANCE ALONG EACH SIDE BEING BRACED (APPROXIMATELY 1 ft [300 mm]). WHEN MORE THAN ONE LAYER OF GABIONS IS REQUIRED, IN ORDER FOR THE INDIVIDUAL UNITS TO BECOME INCORPORATED INTO ONE CONTINUOUS STRUCTURE, THE NEXT LAYER OF GABIONS MUST BE CONNECTED TO THE LAYER UNDERNEATH AFTER THIS LAYER HAS BEEN SECURELY CLOSED (**FIG. 15**).

4.4. CLOSING -- TO ALLOW FOR SETTLEMENT, LEVEL OFF THE FILL 1-1.5 in. (25-40 mm) ABOVE THE TOP OF THE MESH. FOLD THE LID DOWN AND PULL THE EDGES OF THE PANELS TO BE CONNECTED USING AN APPROPRIATE TOOL SUCH AS A LID CLOSER (**FIG. 9**). THE LIDS SHALL BE TIGHTLY LACED ALONG ALL EDGES, ENDS AND DIAPHRAGMS IN THE SAME MANNER AS DESCRIBED FOR ASSEMBLING UNITS (**FIGS. 6a & 6b, 10a & 10b**). ADJACENT LIDS MAY BE SECURELY ATTACHED SIMULTANEOUSLY. ALL END WIRES SHALLTHEN BE TURNED IN TO AVOID PROTRUSIONS .

4.5. TESTING METHODS -- TESTING METHODS AND FREQUENCY, AND VERIFICATION OF MATERIAL SPECIFICATIONS AND COMPACTION SHALL BE THE RESPONSIBILITY OF THE OWNER'S GEOTECHNICAL ENGINEER, UNDER THE DIRECTION OF THE OWNER. THE SHEAR STRENGTH TESTING OF REINFORCED BACKFILL SHALL BE REQUIRED FOR EVERY 1000 CUBIC YARDS PLACED OR IF THE NATURE OF BACKFILL SOIL VISUALLY CHANGES.

5. TECHINICAL REQUIREMENTS

5.1. THE CONTRACTOR SHALL HAVE AN APPROVED SET OF CONSTRUCTION DRAWINGS AND CONTRACT SPECIFICATIONS ON-SITE AT ALL TIMES DURING CONSTRUCTION OF THE GABION WALL STRUCTURE.

5.2. GABION SHALL BE PLACED AT THE LOCATIONS AND ELEVATIONS SHOWN ON THE PROJCET DRAWING SHEETS.

5.3. TRACKED CONSTRUCTION EQUIPMENT SHALL NOT BE OPERATED DIRECTLY ON THE GABION WALL. A MINIMUM FILL THICKNESS OF 6 in. (150mm) IS REQUIRED FOR OPERATION OF TRACKED VEHICLES OVER THE GABION WALL. TURNING OF TRACKED VEHICLES SHALL BE KEPT TO A MINIMUM TO PREVENT DISPLACING THE FILL AND / OR THE GABION WALL.

6. DRAINAGE

6.1. THE BACKFILL SURFACE SHALL BE GRADED AWAY FROM THE WALL FACE A MINIMUM OF 2 PERCENT SLOPE AND A TEMPORARY SOIL BERM SHALL BE CONSTRUCTED NEAR THE WALL CREST TO PREVENT SURFACE AND WATER RUNOFF FROM OVERTOPPING THE WALL. GRADING SHALL BE PERFORMED AT THE END OF EACH WORK DAY.

6.2. AT THE END OF EACH WORK DAY, BACKFILL SURFACE SHALL BE COMPACTED WITH A SMOOTH WHEEL ROLLER TO MINIMIZE PONDING OF WATER AND SATURATION OF THE BACKFILL.

6.3. THE ENGINEERING, DESIGN ANALYSIS, DETAILING AND MITIGATION OF BOTH SURFACE DRAINAGE AND SEEPAGE OF GROUNDWATER SHALL BE THE RESPONSIBILITY OF THE OWNER OR THE OWNER'S REPRESENTATIVE.

6.4. PERMANENT SURFACE WATER DIVERSION AND / OR COLLECTION SHALL BE AS REQUIRED AND PROVIDED BY THE OWNER OR OWNER'S REPRESENTATIVE.

7. SPECIAL PROVISIONS

7.1. WALL ELEVATION VIEWS AND LOCATIONS AND GEOMETRY OF EXISTING STRUCTURES AND GRADE ABOVE AND BELOW THE WALLS MUST BE VERIFIED BY THE OWNER OR OWNER'S REPRESENTATIVE PRIOR TO CONSTRUCTION.

7.2. IF ANY ROCK FORMATIONS AND / OR GROUNDWATER ARE ENCOUNTERED DURING CONSTRUCTION OF THIS WALL, IMMEDIATELY CONTACT THE OWNER OR OWNER'S REPRESENTATIVE.

NOTE:
ALL GABIONS ARE TO BE GALVANIZED AND P.V.C. COATED.

MISS UTILITY

THE CONTRACTOR SHALL CALL "MISS UTILITY" AT 1–800–257–7777 48 HOURS PRIOR TO THE START OF WORK. THE CONTRACTOR IS RESPONSIBLE FOR ENSURING THAT ALL UNDERGROUND UTILITIES IN THE AREA OF PROPOSED WORK ARE LOCATED PRIOR O COMMENCING CONSTRUCTION WORK. THE CONTRACTOR IS RESPONSIBLE FOR COMPLIANCE WITH THE REQUIREMENTS OF CHAPTER 36A OF THE MONTGOMERY COUNTY CODE.

THE CONTRACTOR IS ALSO RESPONSIBLE FOR LOCATING ALL PRIVATE UTILITIES (NOT LOCATED BY MISS UTILITY) WITHIN M–NCPPC PROPERTY AT THEIR EXPENSE. ALL UTILITIES SHOWN ON THE PLANS ARE PROVIDED FOR INFORMATION ONLY AND SHALL BE CONSIDERED APPROXIMATE. M–NCPPC SHALL NOT BE RESPONSIBLE FOR LOCATING UNDERGROUND UTILITIES. ANY UTILTIES OR OTHER UNDERGROUND FACILITIES DAMAGED DURING CONSTRUCTION SHALL BE REPAIRED/REPLACED AT THE CONTRACTOR'S SOLE EXPENSE.

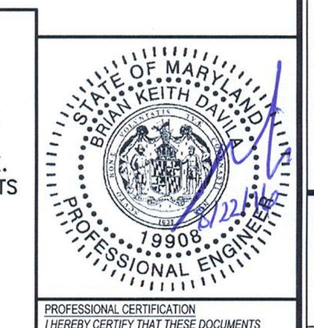

PROFESSIONAL CERTIFICATION
I HEREBY CERTIFY THAT THESE DOCUMENTS WERE PREPARED OR APPROVED BY ME, AND THAT I AM A DULY LICENSED PROFESSIONAL ENGINEER UNDER THE LAWS OF THE STATE OF MARYLAND.
LICENSE #: 19908
EXPIRATION DATE: 01/06/2017

THE MARYLAND–NATIONAL CAPITAL PARK AND PLANNING COMMISSION, DEPARTMENT OF PARK AND PLANNING

M–NCPPC RECORD FILE NO. ______

REVIEWED BY ______

APPROVED BY ______
CHIEF, CONSTRUCTION SECTION

DATE APPROVED ______

THIS IS NOT A PERMIT TO BEGIN CONSTRUCTION

This approval is for technical review only. For permit For permit information, contact Jay Childs, Construction Supervisor at (301)495–2574.

M.C.D.P.S. APPROVED FOR:

Stormwater Management:

Reviewed ______ Date ______

Approved ______ Date ______

N/A
S.M.File No.

Sediment Control Technical Requirements:

Reviewed ______ Date ______

Approved ______ Date ______

Administrative Requirements:

Reviewed ______ Date ______

232507
SEDIMENT CONTROL PERMIT No.

NOTE
MCDPS APPROVAL OF THIS PLAN WILL EXPIRE ONE YEAR FROM THE DATE OF APPROVAL IF THE PROJECT HAS NOT STARTED UNLESS THE PERMIT HAS BEEN EXTENDED.

THIS APPROVAL DOES NOT NEGATE THE NEED OF A MCDPS ACCESS PERMIT.

STORMWATER MANAGEMENT
POND MAINTENANCE
SEQUENCE NO. 826
GABION DETAILS

PUEBLO ROAD
GAITHERSBURG (9th) ELECTION DISTRICT
MONTGOMERY COUNTY, MARYLAND

CPJ Associates
Charles P. Johnson & Associates, Inc.
Civil and Environmental Engineers • Planners • Landscape Architects • Surveyors
1751 Elton Rd., Ste. 300 Silver Spring, MD 20903 301.434.7000 Fax: 301.434.9394
www.cpja.com • Gaithersburg, MD • Frederick, MD • Stevensville, MD • Fairfax, VA

CLIENT: Montgomery County
Department of Environmental Protection
255 Rockville Pike, Suite 120
Rockville, Maryland 20850-4166
Phone: (240) 777-7723
Contact: Mr. Gene Gopenko

COPYRIGHT © LATEST DATE HEREON CHARLES P. JOHNSON & ASSOCIATES, INC. ALL RIGHTS RESERVED, UNAUTHORIZED USE OR REPRODUCTION IS PROHIBITED.

PRELIMINARY PLAN NO: N/A		SITE PLAN NO: N/A	
DESIGN	JBB	SHEET 13A	OF 24
DRAFT	GC		
DATE	APRIL, 2016	FILE NO : 36-188-24.02B	
SCALE	AS-SHOWN		

Attached Xrefs: TB24x36

Last Saved 8/17/2016 Last Plotted 8/19/2016 10:01 AM Sheet N:\36188\DWG\24–02S10–12&17

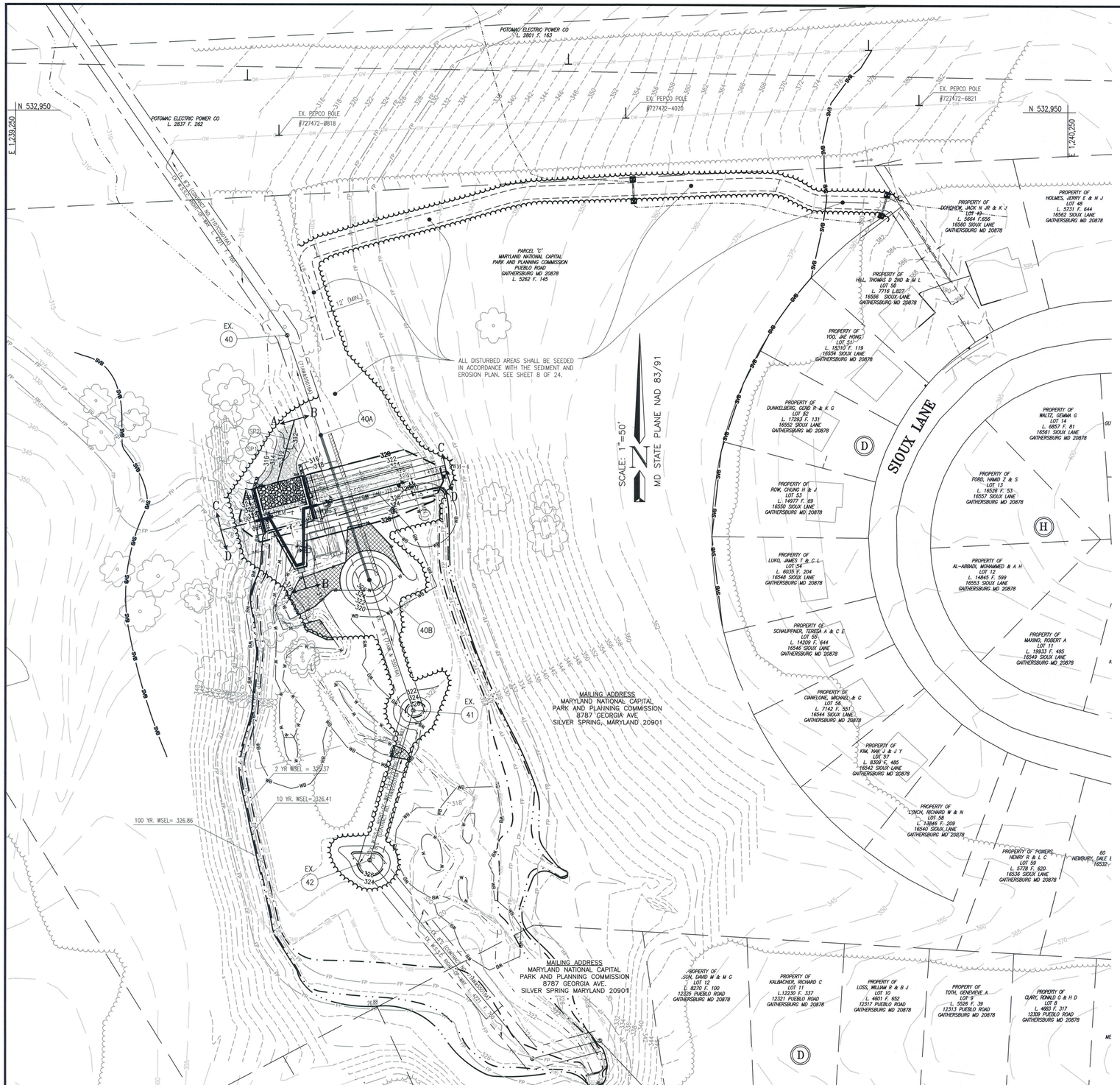

LEGEND

WETLAND AREAS TO BE RESEEDED (WETLAND AREAS ONLY)

NOTE: ALL DISTURBED AREAS SHALL BE SEEDED IN ACCORDANCE WITH THE SEDIMENT AND EROSION PLAN. SEE SHEET 8 OF 24.

LANDSCAPE NOTES:

1. SEE SHEET 8 OF 24 FOR SEEDING SPECS.

Wetland Seed Mix

Scientific Name	Common Name	Percent
Elymus hystrix	Bottle Brush	20%
Elymus virginicus	Virginia Wild Rye	30%
Elymus riparius	Riverbank Wild Rye	25%
Panicum virgatum	Switchgrass	15%
Tridens flavus	Purple top	10%
Seeding Rate: 35 lbs/acre		

Note: Contractor must provide a certification on the wetland seed mix to MNCPPC for approval before any seeding operations.

MISS UTILITY

THE CONTRACTOR SHALL CALL "MISS UTILITY" AT 1-800-257-7777 48 HOURS PRIOR TO THE START OF WORK. THE CONTRACTOR IS RESPONSIBLE FOR ENSURING THAT ALL UNDERGROUND UTILITIES IN THE AREA OF PROPOSED WORK ARE LOCATED PRIOR O COMMENCING CONSTRUCTION WORK. THE CONTRACTOR IS RESPONSIBLE FOR COMPLIANCE WITH THE REQUIREMENTS OF CHAPTER 36A OF THE MONTGOMERY COUNTY CODE.

THE CONTRACTOR IS ALSO RESPONSIBLE FOR LOCATING ALL PRIVATE UTILITIES (NOT LOCATED BY MISS UTILITY) WITHIN M-NCPPC PROPERTY AT THEIR EXPENSE. ALL UTILITIES SHOWN ON THE PLANS ARE PROVIDED FOR INFORMATION ONLY AND SHALL BE CONSIDERED APPROXIMATE. M-NCPPC SHALL NOT BE RESPONSIBLE FOR LOCATING UNDERGROUND UTILITIES. ANY UTILITIES OR OTHER UNDERGROUND FACILITIES DAMAGED DURING CONSTRUCTION SHALL BE REPAIRED/REPLACED AT THE CONTRACTOR'S SOLE EXPENSE.

THE MARYLAND-NATIONAL CAPITAL PARK AND PLANNING COMMISSION, DEPARTMENT OF PARK AND PLANNING

M-NCPPC RECORD FILE NO. _____

REVIEWED BY _____

APPROVED BY _____
CHIEF, CONSTRUCTION SECTION

DATE APPROVED _____

THIS IS NOT A PERMIT TO BEGIN CONSTRUCTION

This approval is for technical review only. For permit For permit information, contact Jay Childs, Construction Supervisor at (301)495-2574.

M.C.D.P.S. APPROVED FOR:

Stormwater Management:

Reviewed Date

Approved Date

N/A
S.M.File No.

Sediment Control Technical Requirements:

Reviewed Date

Approved Date

Administrative Requirements:

Reviewed Date

232507
SEDIMENT CONTROL PERMIT No.

NOTE

MCDPS APPROVAL OF THIS PLAN WILL EXPIRE ONE YEAR FROM THE DATE OF APPROVAL IF THE PROJECT HAS NOT STARTED UNLESS THE PERMIT HAS BEEN EXTENDED.

THIS APPROVAL DOES NOT NEGATE THE NEED OF A MCDPS ACCESS PERMIT.

STORMWATER MANAGEMENT
POND MAINTENANCE
SEQUENCE NO. 826
LANDSCAPE PLAN

PUEBLO ROAD

GAITHERSBURG (9th) ELECTION DISTRICT
MONTGOMERY COUNTY, MARYLAND

CPJ Associates
Charles P. Johnson & Associates, Inc.
Civil and Environmental Engineers • Planners • Landscape Architects • Surveyors
1751 Elton Rd., Ste. 300 Silver Spring, MD 20903 301.434.7000 Fax: 301.434.9394
www.cpja.com • Gaithersburg, MD • Frederick, MD • Stevensville, MD • Fairfax, VA

LANDSCAPE ARCHITECT CERTIFICATE

I HEREBY CERTIFY THAT THE INFORMATION SHOWN HEREON IS CORRECT AND TAKEN FROM AVAILABLE PLANS AND RECORDS.

STATE OF MARYLAND · ERIC JOHN STURM · LICENSED · 755 · LANDSCAPE ARCHITECT

8/22/16
DATE

ERIC J. STURM
REGISTERED LANDSCAPE ARCHITECT MD. # 755

CLIENT: Montgomery County
Department of Environmental Protection
255 Rockville Pike, Suite 120
Rockville, Maryland 20850-4166
Phone: (240) 777-7723
Contact: Mr. Gene Gopenko

PRELIMINARY PLAN NO: N/A	SITE PLAN NO: N/A
DESIGN JBB	SHEET 13B OF 24
DRAFT GC	
DATE APRIL, 2016	
SCALE 1"50'	FILE NO: 36-188-24.02B

COPYRIGHT © LATEST DATE HEREON CHARLES P. JOHNSON & ASSOCIATES, INC. ALL RIGHTS RESERVED, UNAUTHORIZED USE OR REPRODUCTION IS PROHIBITED.

CONSTRUCTION NOTES:

FILTER DIAPHRAGM INSTALLATION NOTES

1) ALL MATERIALS FOR FILTER DIAPHRAGM INSTALLATION MUST BE SUBMITTED TO AND APPROVED BY THE ENGINEER-IN-CHARGE AND THE OWNER'S PROJECT MANAGER PRIOR TO DELIVERY TO SITE. SAMPLES OF SAND AND STONE MATERIAL TO BE USED IN THE FILTER DIAPHRAGM SHALL BE TESTED BY THE GEOTECHNICAL ENGINEER OF RECORD TO ENSURE COMPLIANCE WITH CORRECT GRADATIONS OF THE SPECIFIED MATERIALS.

2) MATERIALS TO BE USED ON THIS PROJECT CONSIST OF THE FOLLOWING:
   - i) ASTM C-33 SAND - THE MINIMUM DRY DENSITY OF THE COMPACTED SAND SHALL BE EQUAL TO 70 PERCENT OF THE DRY DENSITY OBTAINED BY COMPACTING A SINGLE SPECIMEN OF SAND USING THE ENERGY AND METHODS DESCRIBED IN ASTM D698A. THE TEST CONSISTS OF A ONE POINT TEST PERFORMED ON SAND THAT HAS BEEN AIR DRIED THOROUGHLY PRIOR TO COMPACTION. THE SAND SHALL HAVE NO MORE THAN 3% MATERIAL PASSING A #200 SIEVE AS STOCKPILED ON-SITE AND NO MORE THAN 5% MATERIAL PASSING A #200 SIEVE AS INSTALLED. THE GEOTECHNICAL ENGINEER OF RECORD SHALL CONFIRM THIS REQUIREMENT.
   - ii) STONE AGGREGATE SHALL BE DOUBLE-WASHED WITH A GRADATION MEETING AASHTO M43 SIZE #7.
   - iii) UNDER DRAIN PIPE AND FITTINGS SHALL BE 4" DIAMETER POLYVINYL CHLORIDE (P.V.C.) MEETING SCHEDULE 80. SLOTTED PIPE, WHERE SHOWN, SHALL CONSIST OF 1/8" WIDE BY 1.9 INCHES LONG SLOTS ORIENTED FOUR (4) SLOTS PER LF. AND FOUR ROWS SPACED EQUALLY AROUND THE CIRCUMFERENCE OF THE PIPE. SLOTS MUST BE MACHINED PRIOR TO DELIVERY TO THE SITE.

3) ALL FILTER DIAPHRAGM INSTALLATION WORK IS TO BE DONE UNDER SUPERVISION OF A PROFESSIONAL GEOTECHNICAL ENGINEER.

4) FILTER DIAPHRAGM MATERIAL IS TO BE PLACED IN A MAXIMUM OF 8" THICK LIFTS COMPACTING IN BETWEEN EACH LIFT.

5) COMPACTION OF EACH LIFT OF SAND SHALL BE ACCOMPLISHED VIA THE FOLLOWING PROCESS:
   - i) PLACE LIFT THE FULL LENGTH OF THE FILTER DIAPHRAGM PRIOR TO COMPACTION.
   - ii) FLOOD THE LIFT WITH CLEAN POTABLE WATER IMMEDIATELY PRIOR TO COMPACTION FROM A SOURCE APPROVED BY THE ENGINEER-IN-CHARGE AND THE OWNER'S PROJECT MANAGER.
   - iii) MAKE A MINIMUM OF TWO (2) PASSES WITH A VIBRATORY PLATE COMPACTOR WEIGHING AT LEAST 160 POUNDS WITH A MINIMUM CENTRIFUGAL WEIGHT OF 2,450 POUNDS AT A VIBRATING FREQUENCY OF NO LESS THAN 5,000 CYCLES PER MINUTE OR BY A VIBRATORY SMOOTH-WHEELED ROLLER WEIGHING AT LEAST 325 POUNDS WITH A CENTRIFUGAL WEIGHT OF 2,250 POUNDS AT A VIBRATING FREQUENCY OF NO LESS THAN 4,500 CYCLES PER MINUTE JUST AFTER THE WATER LEVEL HAS DROPPED BELOW THE SURFACE OF THE SAND.

6) FILTER DIAPHRAGM MATERIAL SHALL BE PLACED TO AVOID SEGREGATION OF PARTICLE SIZES AND TO ENSURE THE CONTINUITY AND INTEGRITY OF ALL ZONES. NO FOREIGN MATERIAL SHALL BE ALLOWED TO INTERMIX WITH OR OTHERWISE CONTAMINATE THE FILTER DIAPHRAGM MATERIALS. THE CONTRACTOR SHALL COMPLETELY REMOVE ANY FILTER DIAPHRAGM MATERIAL FOUND TO BE CONTAMINATED WITH FOREIGN MATERIALS PRIOR TO INSTALLING ADDITIONAL DIAPHRAGM MATERIAL.

7. TRAFFIC SHALL NOT BE PERMITTED TO CROSSOVER FILTER ZONES AT RANDOM. EQUIPMENT CROSSOVERS SHALL BE MAINTAINED, AND THE NUMBER AND LOCATION OF SUCH CROSSOVERS SHALL BE ESTABLISHED AND APPROVED PRIOR TO BEGINNING THE FILTER DIAPHRAGM PLACEMENT. EACH CROSS OVER SHALL BE CLEARED OF CONTAMINATING MATERIAL AND SHALL BE INSPECTED AND APPROVED BY THE PROFESSIONAL GEOTECHNICAL ENGINEER SUPERVISING THE INSTALLATION BEFORE PLACEMENT OF ADDITIONAL FILTER DIAPHRAGM MATERIAL.

8) ANY DAMAGE TO THE FOUNDATION SURFACE OR THE TRENCH SIDES OR BOTTOM OCCURRING DURING PLACEMENT OF FILTER DIAPHRAGM MATERIAL SHALL BE REPAIRED BEFORE FILTER DIAPHRAGM PLACEMENT IS CONTINUED.

9) THE UPPER SURFACE OF THE FILTER DIAPHRAGM SHOULD BE CONSTRUCTED CONCURRENTLY WITH ADJACENT ZONES OF EARTH FILL AND SHALL BE MAINTAINED AT A MINIMUM ONE LIFT ABOVE THE UPPER SURFACE OF THE ADJACENT EARTH FILL.

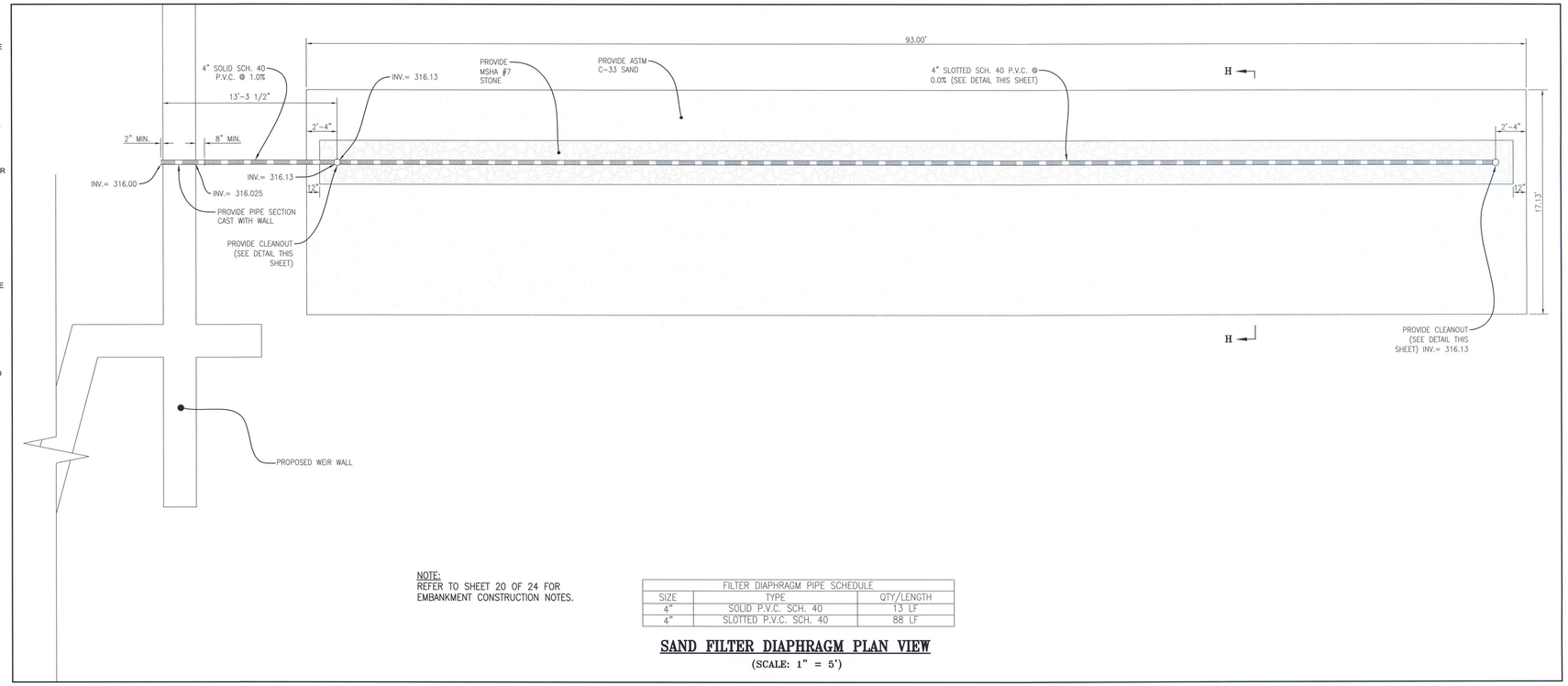

NOTE:
REFER TO SHEET 20 OF 24 FOR EMBANKMENT CONSTRUCTION NOTES.

FILTER DIAPHRAGM PIPE SCHEDULE		
SIZE	TYPE	QTY/LENGTH
4"	SOLID P.V.C. SCH. 40	13 LF
4"	SLOTTED P.V.C. SCH. 40	88 LF

SAND FILTER DIAPHRAGM PLAN VIEW

(SCALE: 1" = 5')

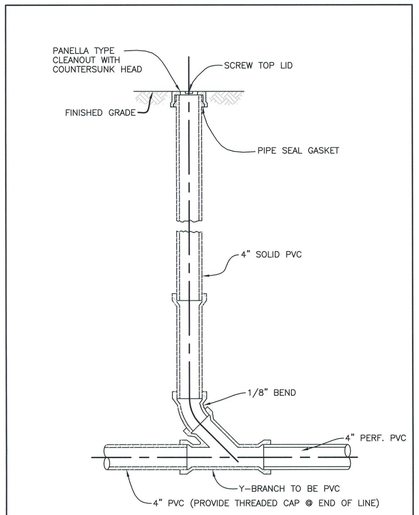

ELEVATION

CLEANOUT/OBSERVATION WELL DETAIL
(NON-TRAFFIC AREA)
NOT TO SCALE

1. FOR AN UNDERGROUND OBSERVATION WELL/CLEANOUT MOUNTED APPROXIMATLY FLUSH WITH FINISHED GRADE, PROVIDE A TUBE MADE OF NON-CORROSIVE MATERIAL, SCHEDULE 80 PVC, OR EQUAL, AT LEAST THREE FEET LONG WITH AN INSIDE DIAMETER OF AT LEAST FOUR INCHES.
2. THE TUBE SHALL HAVE A FACTORY-ATTACHED CAST IRON OR HIGH-IMPACT PLASTIC COLLAR WITH RIBS TO PREVENT ROTATION WHEN REMOVING SCREW-TOP LID. THE SCREW-TOP LID SHALL BE CAST IRON OR HIGH-IMPACT PLASTIC THAT WILL WITHSTAND ULTRA-VIOLET RAYS.

GRAPHIC SCALE
5 0 2.5 5 10
SCALE: 1" = 5'

GENERAL NOTES:
1. THIS PLAN SHALL ONLY BE USED FOR THE CONSTRUCTION OF STORMWATER MANAGEMENT AND ASSOCIATED STORMWATER MANAGEMENT IMPROVEMENTS AS SHOWN. THIS PLAN SHALL NOT BE USED FOR ANY OTHER CONSTRUCTION PURPOSE. THIS PLAN SHALL NOT BE USED FOR GRADING OF THE SITE OTHER THAN AREAS WITHIN THE SWM EASEMENT.
2. THE EXISTING UTILITIES SHOWN HEREON HAVE BEEN LOCATED USING INFORMATION AVAILABLE AT THE TIME THIS PLAN WAS PREPARED. PRIOR TO DIGGING, THE CONTRACTOR SHALL LOCATE ALL EXISTING UTILITIES VIA TEST PIT WITHIN THE LIMITS OF CONSTRUCTION SHOWN ON THIS PLAN AND CONFIRM THAT NO CONFLICTS EXIST. ANY CONFLICTS MUST BE BROUGHT TO THE ATTENTION OF CPJ AND THE OWNER PRIOR TO STARTING CONSTRUCTION.

MISS UTILITY

THE CONTRACTOR SHALL CALL "MISS UTILITY" AT 1-800-257-7777 48 HOURS PRIOR TO THE START OF WORK. THE CONTRACTOR IS RESPONSIBLE FOR ENSURING THAT ALL UNDERGROUND UTILITIES IN THE AREA OF PROPOSED WORK ARE LOCATED PRIOR O COMMENCING CONSTRUCTION WORK. THE CONTRACTOR IS RESPONSIBLE FOR COMPLIANCE WITH THE REQUIREMENTS OF CHAPTER 36A OF THE MONTGOMERY COUNTY CODE.

THE CONTRACTOR IS ALSO RESPONSIBLE FOR LOCATING ALL PRIVATE UTILITIES (NOT LOCATED BY MISS UTILITY) WITHIN M-NCPPC PROPERTY AT THEIR EXPENSE. ALL UTILITIES SHOWN ON THE PLANS ARE PROVIDED FOR INFORMATION ONLY AND SHALL BE CONSIDERED APPROXIMATE. M-NCPPC SHALL NOT BE RESPONSIBLE FOR LOCATING UNDERGROUND UTILITIES. ANY UTILITIES OR OTHER UNDERGROUND FACILITIES DAMAGED DURING CONSTRUCTION SHALL BE REPAIRED/REPLACED AT THE CONTRACTOR'S SOLE EXPENSE.

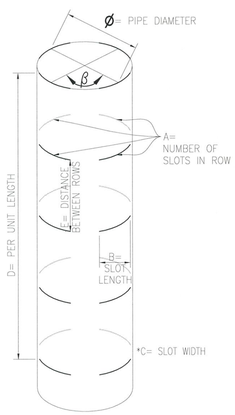

SLOT SCHEDULE		
DIMENSION	VALUE	UNITS
A	4	EA
B	1.9	IN
C	1/8	IN
D	12	IN
E	3	IN
ø	4	IN
β	90	DEGREES

4" SLOTTED PVC SCH. 40 DETAIL

(SCALE: 1"=1')

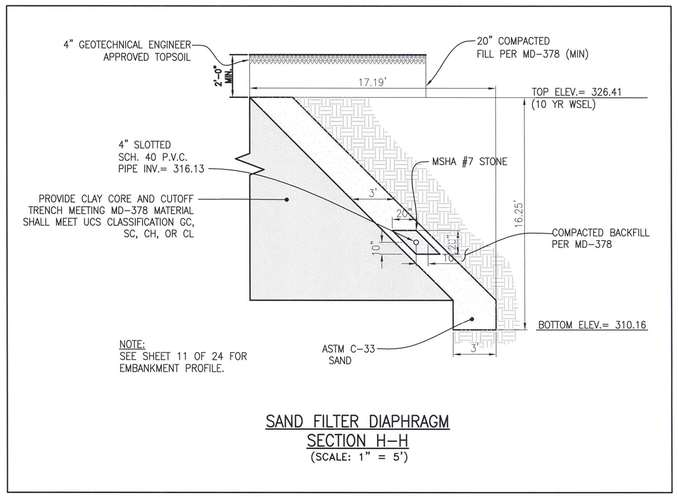

NOTE:
SEE SHEET 11 OF 24 FOR EMBANKMENT PROFILE.

SAND FILTER DIAPHRAGM SECTION H-H

(SCALE: 1" = 5')

THE MARYLAND-NATIONAL CAPITAL PARK AND PLANNING COMMISSION, DEPARTMENT OF PARK AND PLANNING

M-NCPPC RECORD FILE NO. _____

REVIEWED BY _____

APPROVED BY _____
CHIEF, CONSTRUCTION SECTION

DATE APPROVED _____

THIS IS NOT A PERMIT TO BEGIN CONSTRUCTION

This approval is for technical review only. For permit For permit information, contact Jay Childs, Construction Supervisor at (301)495-2574.

M.C.D.P.S.
APPROVED FOR:

Stormwater Management:

Reviewed Date

Approved Date

N/A
S.M.File No.

Sediment Control Technical Requirements:

Reviewed Date

Approved Date

Administrative Requirements:

Reviewed Date

232507
SEDIMENT CONTROL PERMIT No.

NOTE

MCDPS APPROVAL OF THIS PLAN WILL EXPIRE ONE YEAR FROM THE DATE OF APPROVAL IF THE PROJECT HAS NOT STARTED UNLESS THE PERMIT HAS BEEN EXTENDED.

THIS APPROVAL DOES NOT NEGATE THE NEED OF A MCDPS ACCESS PERMIT.

STORMWATER MANAGEMENT
POND MAINTENANCE
SEQUENCE NO. 826
SAND FILTER DIAPHRAGM DETAILS

PUEBLO ROAD

GAITHERSBURG (9th) ELECTION DISTRICT
MONTGOMERY COUNTY, MARYLAND

CPJ Associates
Charles P. Johnson & Associates, Inc.
Civil and Environmental Engineers • Planners • Landscape Architects • Surveyors
1751 Elton Rd., Ste. 300 Silver Spring, MD 20903 301.434.7000 Fax: 301.434.9394
www.cpja.com • Gaithersburg, MD • Frederick, MD • Stevensville, MD • Fairfax, VA

STATE OF MARYLAND
BRIAN KEITH DAILEY
19908
PROFESSIONAL ENGINEER
8/17/2016

PROFESSIONAL CERTIFICATION
I HEREBY CERTIFY THAT THESE DOCUMENTS WERE PREPARED OR APPROVED BY ME, AND THAT I AM A DULY LICENSED PROFESSIONAL ENGINEER UNDER THE LAWS OF THE STATE OF MARYLAND.

LICENSE # 19908

EXPIRATION DATE: 01/06/2017

CLIENT: Montgomery County
Department of Environmental Protection
255 Rockville Pike, Suite 120
Rockville, Maryland 20850-4166
Phone: (240) 777-7723
Contact: Mr. Gene Gopenko

PRELIMINARY PLAN NO. N/A		SITE PLAN NO. N/A	
DESIGN JBB	SHEET	14	OF 24
DRAFT GC			
DATE APRIL, 2016	FILE NO: 36-188-24.02B		
SCALE AS-SHOWN			

COPYRIGHT © LATEST DATE HEREON CHARLES P. JOHNSON & ASSOCIATES, INC. ALL RIGHTS RESERVED, UNAUTHORIZED USE OR REPRODUCTION IS PROHIBITED.

Attached Xrefs: TB24x36

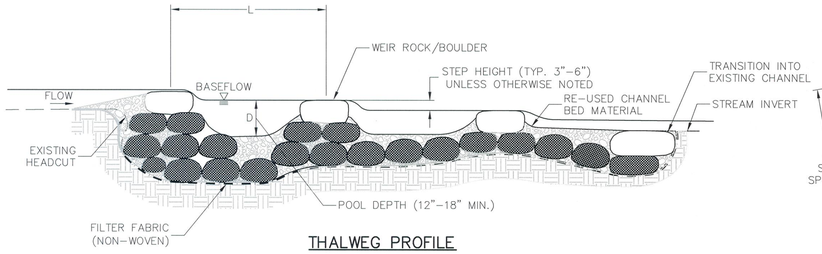

THALWEG PROFILE

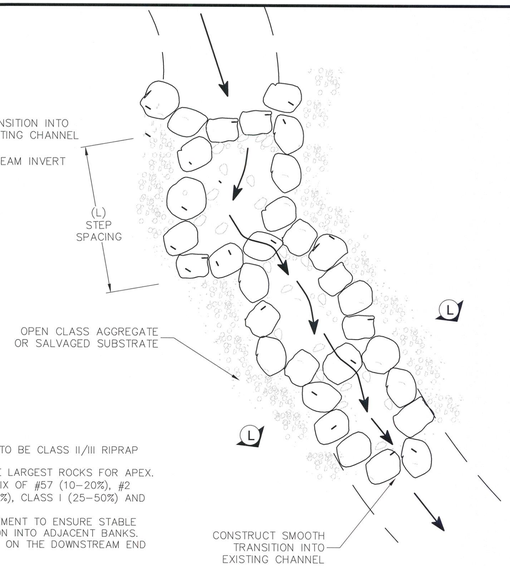

PLAN VIEW – STEP POOL

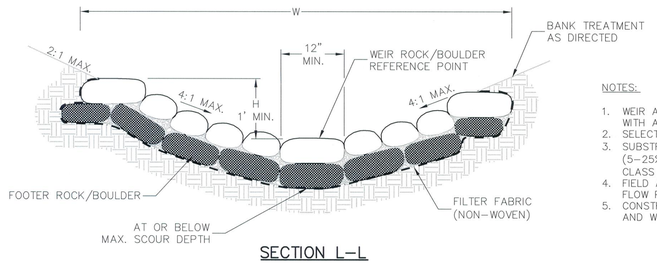

SECTION L–L

NOTES:

1. WEIR AND FOOTER ROCKS TO BE CLASS II/III RIPRAP WITH ANGULAR SHAPE.
2. SELECT WEIR ROCKS TO BE LARGEST ROCKS FOR APEX.
3. SUBSTRATE SHALL BE A MIX OF #57 (10–20%), #2 (5–25%), CLASS 0 (15–30%), CLASS I (25–50%) AND CLASS II (0–15%).
4. FIELD ADJUST ROCK PLACEMENT TO ENSURE STABLE FLOW PATH AND TRANSITION INTO ADJACENT BANKS.
5. CONSTRUCTION WILL START ON THE DOWNSTREAM END AND WORK UPSTREAM.

NOTE: WHERE THE SUBSTRATE IS SUFFICIENTLY FINE AS TO PASS BETWEEN THE ROCKS IN THE STOP POOL, THE STRUCTURE SHOULD BE PLACED ON A LAYER OF GEOTEXTILE FABRIC (TYPE III) (EROSION CONTROL) LOCATED UNDERNEATH AND ON THE UPSTREAM SIDE OF THE STRUCTURE. ABOVE THE FLOW LINE, A LAYER OF RIPRAP MAY BE USED TO HOLD THE FABRIC IN PLACE.

STEP POOL TABLE

STR. #	STA.	OFFSET	TOP ELEV.	L (STEP SPACING)	H	W	D	TOP ROCKS MIN. DIMENSIONS			FOOTER ROCK MIN. DIMENSIONS		
								LENGTH (L)	HEIGHT (H)	WIDTH (W)	LENGTH (L)	HEIGHT (H)	WIDTH (W)
SP1	1+20	0.00	312.30	20'	1.7'	12'	1'	24"	12"	18"	36"	18"	30"
SP2	1+36	0.00	311.30	25'	1.7'	12'	1'	24"	12"	18"	36"	18"	30"

STEP POOLS DETAIL (3.9)
NOT TO SCALE

STEP POOL DETAIL
NO SCALE

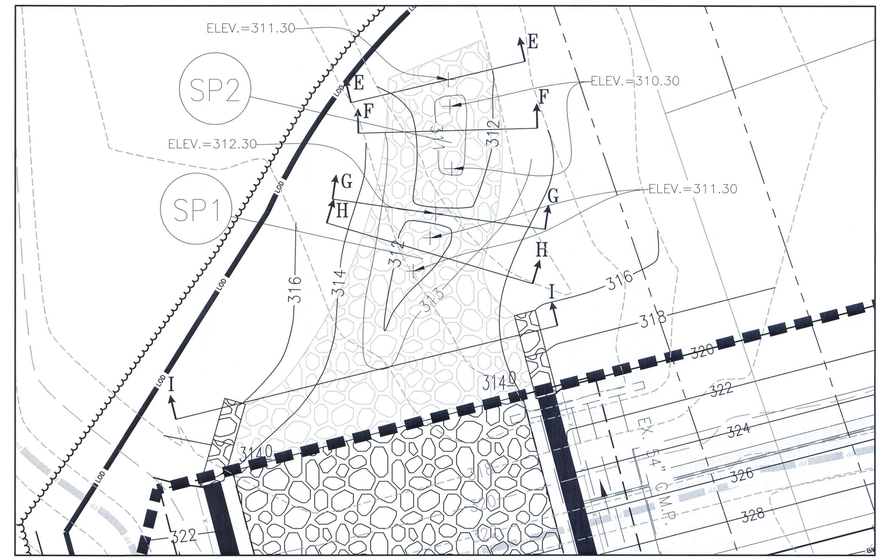

STEP POOL PLAN VIEW
SCALE: 1"=10'

GRAPHIC SCALE
10 0 5 10 20
SCALE: 1" = 10'

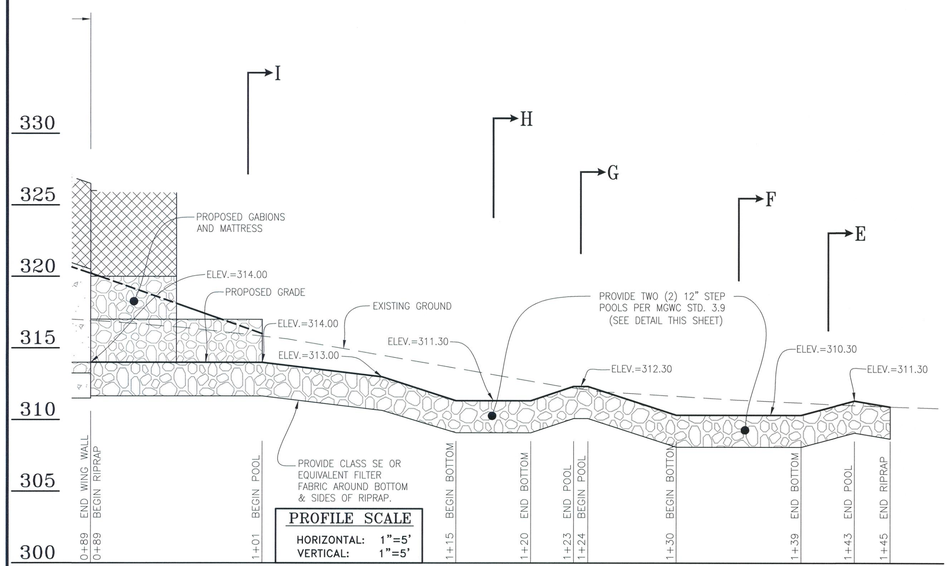

STEP POOL PROFILE (AT THALWEG)
SCALE: 1"=5'

GRAPHIC SCALE
5 0 2.5 5 10
SCALE: 1" = 5'

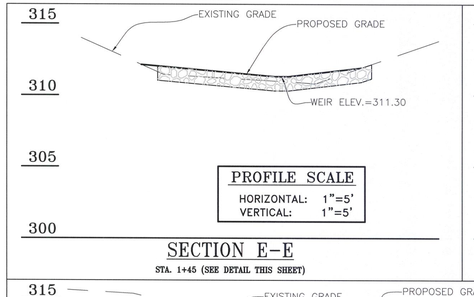

SECTION E–E
STA. 1+45 (SEE DETAIL THIS SHEET)

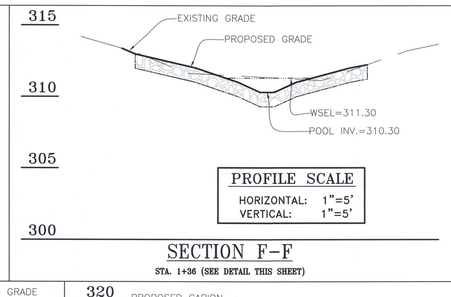

SECTION F–F
STA. 1+36 (SEE DETAIL THIS SHEET)

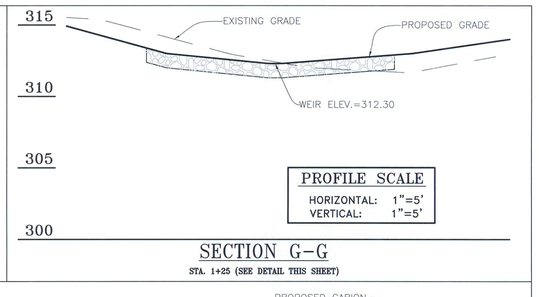

SECTION G–G
STA. 1+25 (SEE DETAIL THIS SHEET)

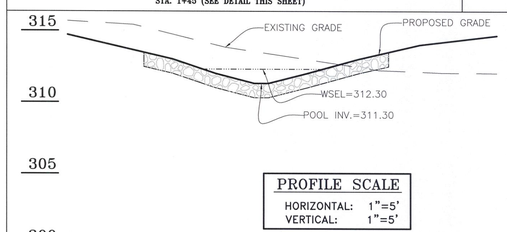

SECTION H–H
STA. 1+20 (SEE DETAIL THIS SHEET)

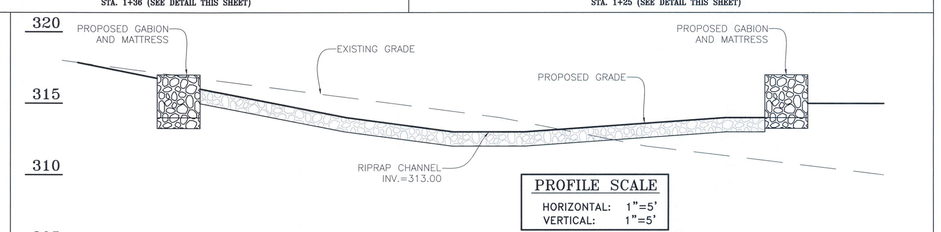

SECTION I–I
STA. 1+02 (SEE DETAIL THIS SHEET)

GRAPHIC SCALE
5 0 2.5 5 10
SCALE: 1" = 5'

MISS UTILITY

THE CONTRACTOR SHALL CALL "MISS UTILITY" AT 1-800-257-7777 48 HOURS PRIOR TO THE START OF WORK. THE CONTRACTOR IS RESPONSIBLE FOR ENSURING THAT ALL UNDERGROUND UTILITIES IN THE AREA OF PROPOSED WORK ARE LOCATED PRIOR O COMMENCING CONSTRUCTION WORK. THE CONTRACTOR IS RESPONSIBLE FOR COMPLIANCE WITH THE REQUIREMENTS OF CHAPTER 36A OF THE MONTGOMERY COUNTY CODE.

THE CONTRACTOR IS ALSO RESPONSIBLE FOR LOCATING ALL PRIVATE UTILITIES (NOT LOCATED BY MISS UTILITY) WITHIN M-NCPPC PROPERTY AT THEIR EXPENSE. ALL UTILITIES SHOWN ON THE PLANS ARE PROVIDED FOR INFORMATION ONLY AND SHALL BE CONSIDERED APPROXIMATE. M-NCPPC SHALL NOT BE RESPONSIBLE FOR LOCATING UNDERGROUND UTILITIES. ANY UTILTIES OR OTHER UNDERGROUND FACILITIES DAMAGED DURING CONSTRUCTION SHALL BE REPAIRED/REPLACED AT THE CONTRACTOR'S SOLE EXPENSE.

STATE OF MARYLAND
BRIAN KEITH HAMM
19908
PROFESSIONAL ENGINEER

PROFESSIONAL CERTIFICATION.
I HEREBY CERTIFY THAT THESE DOCUMENTS WERE PREPARED OR APPROVED BY ME, AND THAT I AM A DULY LICENSED PROFESSIONAL ENGINEER UNDER THE LAWS OF THE STATE OF MARYLAND.

LICENSE #: 19908

EXPIRATION DATE: 01/06/2017

THE MARYLAND–NATIONAL CAPITAL PARK AND PLANNING COMMISSION, DEPARTMENT OF PARK AND PLANNING

M–NCPPC RECORD FILE NO. _____

REVIEWED BY _____

APPROVED BY _____
CHIEF, CONSTRUCTION SECTION

DATE APPROVED _____

THIS IS NOT A PERMIT TO BEGIN CONSTRUCTION

This approval is for technical review only. For permit information, contact Jay Childs, Construction Supervisor at (301)495–2574.

MONTGOMERY COUNTY DEPARTMENT OF PERMITTING SERVICES APPROVED FOR:

Stormwater Management:

Reviewed Date

Approved Date

N/A
S.M.File No.

Sediment Control Technical Requirements:

Reviewed Date

Approved Date

NOTE: MCDPS APPROVAL DOES NOT NEGATE THE NEED OF A MCDPS ACCESS PERMIT.

Administrative Requirements:

Reviewed Date

232507
SEDIMENT CONTROL PERMIT No.

MCDPS APPROVAL OF THIS PLAN WILL EXPIRE ONE YEAR FROM THE DATE OF APPROVAL, IF THE PROJECT HAS NOT STARTED, UNLESS THE PERMIT HAS BEEN EXTENDED.

STORMWATER MANAGEMENT
POND MAINTENANCE
SEQUENCE NO. 826
STEP POOL DETAILS

PUEBLO ROAD

GAITHERSBURG (9th) ELECTION DISTRICT
MONTGOMERY COUNTY, MARYLAND

CPJ Associates
Charles P. Johnson & Associates, Inc.
Civil and Environmental Engineers • Planners • Landscape Architects • Surveyors
1751 Elton Rd., Ste. 300 Silver Spring, MD 20903 301.434.7000 Fax: 301.434.9594
www.cpja.com • Gaithersburg, MD • Frederick, MD • Stevensville, MD • Fairfax, VA

CLIENT: Montgomery County
Department of Environmental Protection
255 Rockville Pike, Suite 120
Rockville, Maryland 20850-4166
Phone: (240) 777-7723
Contact: Mr. Gene Gopenko

PRELIMINARY PLAN NO.	SITE PLAN NO.
N/A	N/A
DESIGN JBB	SHEET 15 OF 24
DRAFT GC	
DATE APRIL, 2016	FILE NO: 36-188-24.02B
SCALE AS-SHOWN	

COPYRIGHT © LATEST DATE HEREON
CHARLES P. JOHNSON & ASSOCIATES, INC.
ALL RIGHTS RESERVED. UNAUTHORIZED USE OR REPRODUCTION IS PROHIBITED.

Attached Xrefs: TB24x36/24-02s10-12&17/24-02s7-9

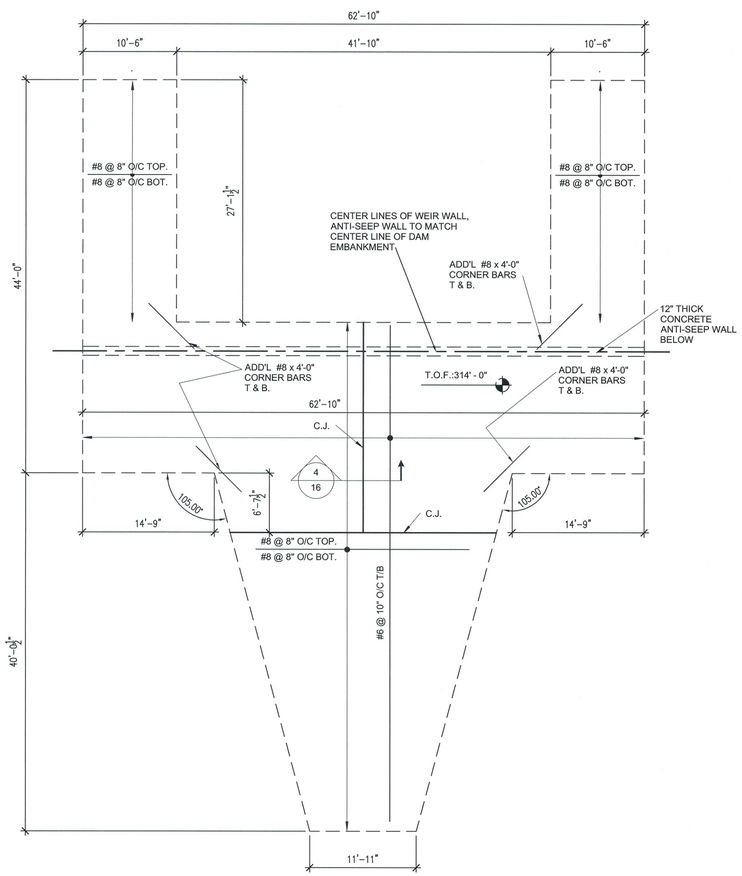

1 FOUNDATION
1/8" = 1'-0"

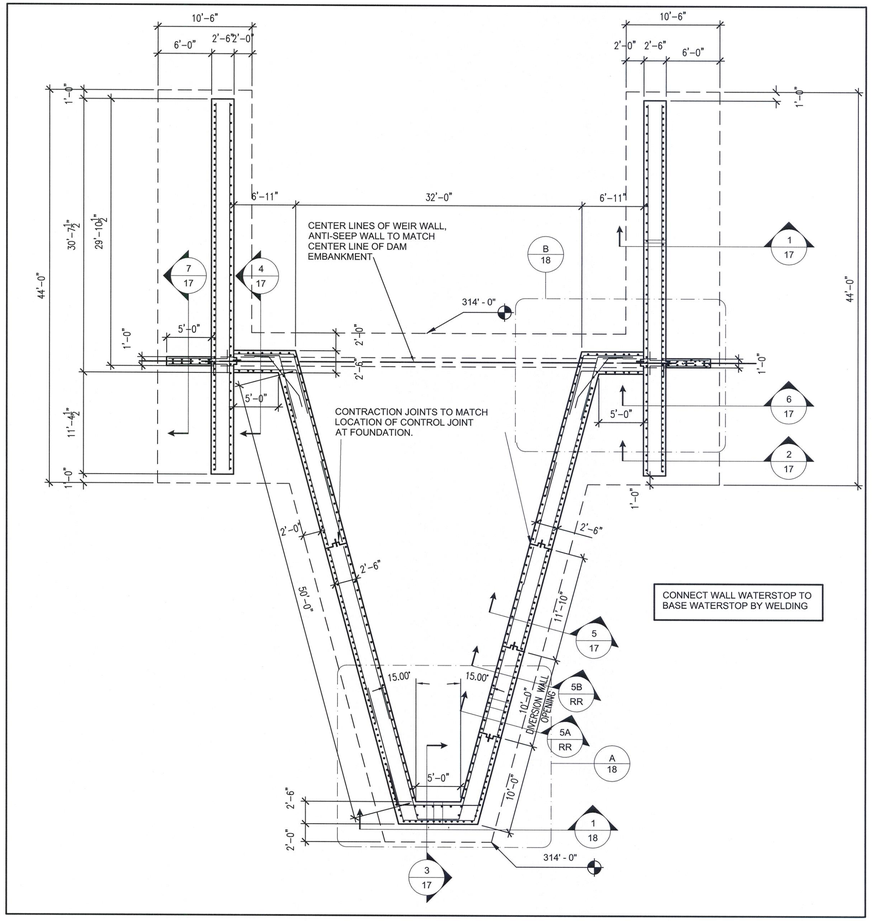

2 LABYRINTH WALL
1/8" = 1'-0"

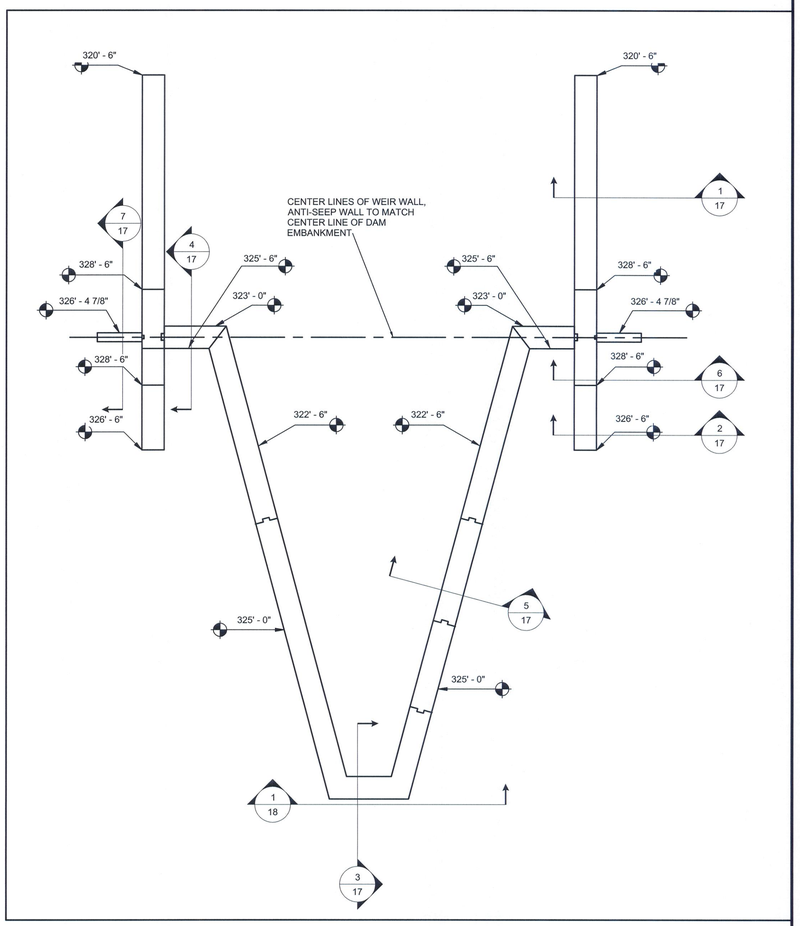

3 TOP OF WALL
1/8" = 1'-0"

STRUCTURAL NOTES

1. BUILDING CODES

A. ALL CONSTRUCTION SHALL CONFORM WITH THE 2009 IBC BUILDING CODE AND ALL SUBSEQUENT SUPPLEMENTS.

B. IN ADDITION, ALL CONSTRUCTION SHALL CONFORM WITH THE GOVERNING LOCAL BUILDING CODE.

2. MISCELLANEOUS

A. SHOP DRAWINGS FOR ALL STRUCTURAL ELEMENTS SHOWN ON THE CONTRACT DOCUMENTS MUST BE SUBMITTED BY THE CONTRACTOR OR OWNER FOR REVIEW BY THE ENGINEER. IF THE CONTRACTOR OR OWNER FAILS TO SUBMIT THE SHOP DRAWINGS, THE ENGINEER WILL NOT BE RESPONSIBLE FOR STRUCTURAL CERTIFICATION AND DESIGN OF THE PROJECT. THE SHOP DRAWINGS SHALL INDICATE ANY DEVIATIONS OR OMISSIONS FROM THE CONTRACT DOCUMENTS. THE GENERAL CONTRACTOR SHALL REVIEW ALL SHOP DRAWINGS PRIOR TO SUBMISSION AND MAKE ALL CORRECTIONS DEEMED NECESSARY.

B. THE CONTRACTOR SHALL REVIEW THE CIVIL PLANS FOR LOCATION AND DIMENSION OF CHASES, INSERTS, OPENINGS, SLEEVES, DEPRESSIONS AND OTHER PROJECT REQUIREMENTS WHICH IMPACT THE STRUCTURAL COMPONENTS.

C. THE CONTRACTOR SHALL CHECK AND VERIFY ALL DIMENSIONS SHOWN ON THE CONTRACT DRAWINGS BEFORE PROCEEDING WITH CONSTRUCTION. ALL DISCREPANCIES AND OMISSIONS SHALL BE BROUGHT TO THE ATTENTION OF THE ARCHITECT / ENGINEER.

D. THE CONTRACTOR SHALL NOT SUBMIT REPRODUCTIONS OF THE STRUCTURAL CONTRACT DOCUMENTS AS SHOP DRAWINGS.

E. SCALES SHOWN ON THE STRUCTURAL CONTRACT DRAWINGS ARE FOR GENERAL INFORMATION ONLY. DIMENSIONAL INFORMATION SHALL NOT BE OBTAINED BY SCALING THE DRAWINGS.

3. FOUNDATIONS

B. ALL FOOTINGS HAVE BEEN DESIGNED FOR AN ASSUMED NET ALLOWABLE SOIL BEARING PRESSURE OF 3000 PSF.
THE ALLOWABLE SOIL BEARING PRESSURE SHALL BE FIELD VERIFIED BY A REGISTERED GEOTECHNICAL ENGINEER AND APPROVED PRIOR TO PLACING FOUNDATIONS. SHOULD THE ACTUAL SOIL BEARING PRESSURE BE LESS THAN 3000 PSF, THE CONTRACTOR SHALL IMMEDIATELY NOTIFY THE ENGINEER.

C. ALL FILL PLACED UNDER THE FOUNDATIONS SHALL BE COMPACTED TO A DRY DENSITY OF AT LEAST 95 PERCENT OF MAXIMUM DRY DENSITY AS DETERMINED BY ASTM D 698.

D. ALL EXCAVATION AND BACKFILLING OPERATIONS WITHIN THE STRUCTURE FOOTPRINT, INCLUDING ALL COMPACTION TESTS AND INSPECTIONS, SHALL BE DONE UNDER THE DIRECTION AND SUPERVISION OF A REGISTERED GEOTECHNICAL ENGINEER.

E. THE CONTRACTOR SHALL NOTIFY THE ENGINEER OF ALL FOUNDATION AND SOIL CONDITIONS WHICH DIFFER FROM THOSE ANTICIPATED OR INDICATED IN THE CONTRACT DOCUMENTS.

F. ALL EXISTING SOIL CONTAINING GRAVEL, CONSTRUCTION OR DEMOLITION DEBRIS, ORGANIC SUBSTANCES, OR OTHER FOREIGN OBJECTS SHALL BE REMOVED FROM THE REGION WITHIN THE FOOTPRINT OF THE STRUCTURE.

4. STRUCTURAL FILL

A. NEW FILL MATERIAL AND EXISTING BASE MATERIAL SHALL BE FREE OF ALL REFUSE, DEBRIS, AND ORGANIC MATTER AND SHALL BE APPROVED FOR USE BY A REGISTERED GEOTECHNICAL ENGINEER.

B. FILL MATERIAL SHALL BE DEPOSITED IN 8 INCH MAXIMUM LOOSE LIFTS AND COMPACTED TO A DRY DENSITY OF AT LEAST 95 PERCENT OF MAXIMUM DRY DENSITY AS DETERMINED BY ASTM D 698. FILL SHALL BE PLACED AND COMPACTED IN 8 INCH LOOSE LIFTS TO DESIRED FINISHED GRADE UNDER THE GUIDANCE AND OBSERVATION OF A PROFESSIONAL GEOTECHNICAL ENGINEER REGISTERED IN THE STATE OF MARYLAND.

C. WHEN WORK IS INTERRUPTED BY RAIN, FILL OPERATIONS SHALL NOT RESUME UNTIL FIELD TESTS INDICATE THAT THE MOISTURE CONTENT AND SOIL DENSITY OF THE TOP 8 INCHES OF FILL IS WITHIN THE LIMITS SPECIFIED.

D. ALL FILL MATERIAL SHALL BE PLACED IN SUCH A MANNER THAT THE SURFACE IS SLOPED TO PREVENT THE PONDING OF WATER.

E. PROVIDE STRUCTURAL BACKFILL PER THE REQUIREMENTS OF MD-378. (LATEST APPROVED)

5. CAST IN PLACE CONCRETE

A. ALL CONCRETE CONSTRUCTION SHALL CONFORM TO THE "SPECIFICATIONS FOR STRUCTURAL CONCRETE FOR BUILDINGS (ACI 301)","BUILDING CODE REQUIREMENTS FOR REINFORCED CONCRETE (ACI 318)" AND TO THE "ENVIRONMENTAL ENGINEERING CONCRETE STRUCTURES (ACI 350)".

B. IN ADDITION TO THE ABOVE, ALL CONCRETE WORK SHALL CONFORM TO THE FOLLOWING:

1. RECOMMENDED PRACTICE FOR HOT WEATHER CONCRETING (ACI 305).
2. RECOMMENDED PRACTICE FOR COLD WEATHER CONCRETING (ACI 306).
3. RECOMMENDED PRACTICE FOR CONCRETE FORMWORK (ACI 347).

C. ALL CONCRETE, UNLESS NOTED OTHERWISE, SHALL BE STONE AGGREGATE CONCRETE HAVING A MINIMUM 28 DAY COMPRESSIVE STRENGTH OF 4500 PSI (SHA MIX #6). ALL CONCRETE EXPOSED TO WEATHER SHALL HAVE AN AIR ENTRAINMENT OF 5% +/- 1%. NO ADMIXTURES CONTAINING CALCIUM CHLORIDE SHALL BE PERMITTED. MAXIMUM AGGREGATE SIZE SHALL BE 1", AND MAXIMUM SLUMP SHALL BE 4". ALL CONCRETE, EXCEPT FOOTINGS, SHALL CONTAIN A WATER REDUCING ADMIXTURE. PORTLAND CEMENT SHALL CONFORM TO ASTM C 150 AND NORMAL WEIGHT AGGREGATES SHALL CONFORM TO ASTM C 33.

D. ALL REINFORCING BARS SHALL BE NEW BILLET STEEL CONFORMING TO ASTM A 615 GRADE 60.
LAP ALL REINFORCING BARS A MINIMUM OF 60 BAR DIAMETERS (U.N.O.)

E. ALL REINFORCING SHALL BE DETAILED, FABRICATED AND PLACED IN ACCORDANCE WITH THE CRSI "MANUAL OF STANDARD PRACTICE", ACI 315" DETAILS AND DETAILING OF CONCRETE REINFORCEMENT", ACI SP 66 "DETAILING MANUAL".

F. ALL CONCRETE MIX DESIGNS, INCLUDING CEMENT CONTENT, WATER CEMENT RATIO, FINE AND COARSE AGGREGATE CONTENT AND ALL ADMIXTURES, SHALL BE REVIEWED BY ENGINEER PRIOR TO PLACING FIRST CONCRETE.

G. ALL CONCRETE SHALL BE SAMPLED AND TESTED BY THE TESTING AGENCY. THE CONTRACTOR SHALL NOTIFY THE TESTING AGENCY 48 HOURS PRIOR TO THE PLACING OF ANY CONCRETE.

H. THE CONCRETE STRUCTURE SHALL NOT SUPPORT THE DESIGN LIVE LOAD FOR A MINIMUM OF 28 DAYS.

J. GROUND BLAST FURNACE SLAG IS NOT ALLOWED TO BE USED TO REPLACE THE PORTLAND CEMENT IN A CONCRETE MIX, AND FLY ASH OR POZZOLAN ARE NOT ALLOWED TO BE USED TO REPLACE THE PORTLAND CEMENT.

K. MINIMUM COVER FOR ALL REINFORCING SHALL BE AS FOLLOWS UNLESS OTHERWISE INDICATED:

FOUNDATIONS	3"
CAST AGAINST EARTH	3"
EXPOSED TO EARTH OR WEATHER	
SLABS	2"
WALLS	2"

6. RETAINING WALLS

A. RETAINING WALLS HAVE BEEN DESIGNED WITH BACKFILL MATERIAL HAVING THE FOLLOWING CHARACTERISTICS:

ACTIVE EARTH PRESSURE CALCULATED BASED ON AN EQUIVALENT LATERAL OF .....62.7 LBS/PSF/FT.

AT REST EARTH PRESSURE CALCULATED BASED ON AN EQUIVALENT LATERAL OF .....75 LBS/PSF/FT.

COEFFICIENT OF FRICTION BETWEEN CONCRETE AND SOIL OF 0.40

SOIL WEIGHT OF .....110 PCF.

WATER WEIGHT OF .....62.4 PCF.

B. THE STRUCTURES HAVE BEEN DESIGNED FOR THE FOLLOWING MINIMUM FACTORS OF SAFETY:

	UPLIFT	OVERTURNING	SLIDING
100 YRS	2.0	1.4	2.2
10 YRS	2.2	1.5	2.2
Cpv	3.3	1.5	3.2

C. DO NOT BACKFILL CONCRETE RETAINING WALLS UNTIL CONCRETE HAS REACHED ITS DESIGN STRENGTH AT 28 DAYS.

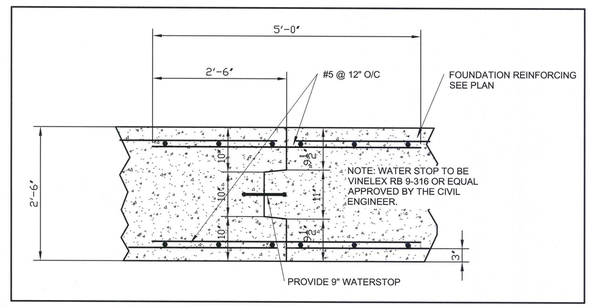

Typical Contraction Joint @ Foundation (C.J.)
4 3/4" = 1'-0"

WATERSTOP DETAIL (RB 9-316)
N.T.S.

GRAPHIC SCALE
1 0 0.5 1 2
SCALE: 1" = 1'

CONCRETE

CONCRETE DESIGN SHALL MEET THE REQUIREMENTS OF ACI 350, ENVIRONMENTAL ENGINEERING CONCRETE STRUCTURES, WITH FREEZING AND THAWING EXPOSURES. CONCRETE SHALL BE A TYPE II OR IIA CEMENT, WITH A 28 DAY COMPRESSIVE STRENGTH OF 4500 PSI FOR CAST IN PLACE. CONCRETE SHALL ALSO MEET THE REQUIREMENTS OF MARYLAND DEPARTMENT OF TRANSPORTATION, STATE HIGHWAY ADMINISTRATION STANDARD SPECIFICATIONS FOR CONSTRUCTION AND MATERIALS, SECTION 420, MIX NO. 6.

STRUCTURAL CERTIFICATION

I hereby certify that the structural design of this stormwater management facility is in accordance with applicable codes and that the plan for this has been designed for specified loading(s) as indicated hereon.

Design Engineer Signature	8/22/16 Date
PATRICIO PALAVECINO Printed Name	20477 Registration Number
ACI350 Design Loading	

STATE OF MARYLAND PATRICIO O. PALAVECINO No. 20477 REGISTERED PROFESSIONAL ENGINEER

THE MARYLAND-NATIONAL CAPITAL PARK AND PLANNING COMMISSION, DEPARTMENT OF PARK AND PLANNING

M-NCPPC RECORD FILE NO. _____

REVIEWED BY _____

APPROVED BY _____
CHIEF, CONSTRUCTION SECTION

DATE APPROVED _____

THIS IS NOT A PERMIT TO BEGIN CONSTRUCTION

This approval is for technical review only. For permit For permit information, contact Jay Childs, Construction Supervisor at (301)495-2574.

STORMWATER MANAGEMENT POND MAINTENANCE SEQUENCE NO. 826 STRUCTURAL - PLAN VIEW

PUEBLO ROAD

GAITHERSBURG (9th) ELECTION DISTRICT MONTGOMERY COUNTY, MARYLAND

MISS UTILITY

THE CONTRACTOR SHALL CALL "MISS UTILITY" AT 1-800-257-7777 48 HOURS PRIOR TO THE START OF WORK. THE CONTRACTOR IS RESPONSIBLE FOR ENSURING THAT ALL UNDERGROUND UTILITIES IN THE AREA OF PROPOSED WORK ARE LOCATED PRIOR O COMMENCING CONSTRUCTION WORK. THE CONTRACTOR IS RESPONSIBLE FOR COMPLIANCE WITH THE REQUIREMENTS OF CHAPTER 36A OF THE MONTGOMERY COUNTY CODE.

THE CONTRACTOR IS ALSO RESPONSIBLE FOR LOCATING ALL PRIVATE UTILITIES (NOT LOCATED BY MISS UTILITY) WITHIN M-NCPPC PROPERTY AT THEIR EXPENSE. ALL UTILITIES SHOWN ON THE PLANS ARE PROVIDED FOR INFORMATION ONLY AND SHALL BE CONSIDERED APPROXIMATE. M-NCPPC SHALL NOT BE RESPONSIBLE FOR LOCATING UNDERGROUND UTILITIES. ANY UTILTIES OR OTHER UNDERGROUND FACILITIES DAMAGED DURING CONSTRUCTION SHALL BE REPAIRED/REPLACED AT THE CONTRACTOR'S SOLE EXPENSE.

MONTGOMERY COUNTY DEPARTMENT OF PERMITTING SERVICES APPROVED FOR:

NOTE: MCDPS APPROVAL DOES NOT NEGATE THE NEED OF A MCDPS ACCESS PERMIT.

Stormwater Management:	Sediment Control Technical Requirements:	Administrative Requirements:
Reviewed Date	Reviewed Date	Reviewed Date
Approved Date	Approved Date	232507 SEDIMENT CONTROL PERMIT No.
N/A S.M.File No.		MCDPS APPROVAL OF THIS PLAN WILL EXPIRE ONE YEAR FROM THE DATE OF APPROVAL, IF THE PROJECT HAS NOT STARTED, UNLESS THE PERMIT HAS BEEN EXTENDED.

CPJ Associates
Charles P. Johnson & Associates, Inc.
Civil and Environmental Engineers • Planners • Landscape Architects • Surveyors
1751 Elton Rd., Ste. 300 Silver Spring, MD 20903 301.434.7000 Fax: 301.434.9394
www.cpja.com • Gaithersburg, MD • Frederick, MD • Stevensville, MD • Fairfax, VA

CLIENT: Montgomery County Department of Environmental Protection 255 Rockville Pike, Suite 120 Rockville, Maryland 20850-4166 Phone: (240) 777-7725 Contact: Mr. Gene Gopenko

PRELIMINARY PLAN NO: N/A	SITE PLAN NO: N/A
DESIGN JBB	SHEET 16 OF 24
DRAFT GC	
DATE APRIL, 2016	FILE NO: 36-188-24.02B
SCALE AS-SHOWN	

COPYRIGHT © LATEST DATE HEREON CHARLES P. JOHNSON & ASSOCIATES, INC. ALL RIGHTS RESERVED, UNAUTHORIZED USE OR REPRODUCTION IS PROHIBITED.

Attached Xrefs: TB24x36

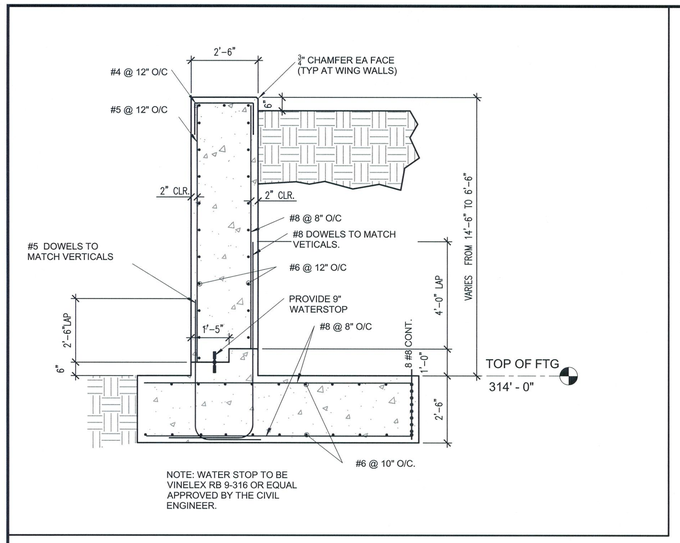

1 Section 1/17
3/8" = 1'-0"

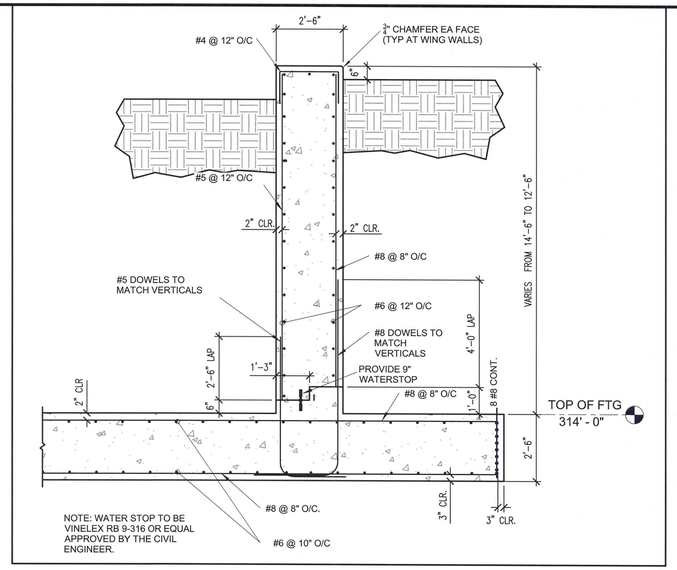

2 Section 2/17
3/8" = 1'-0"

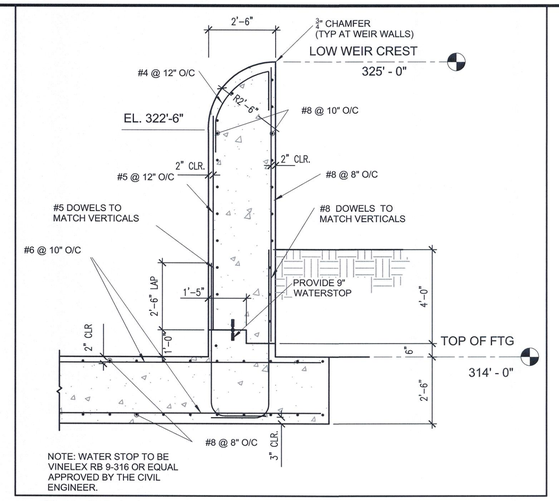

3 Section 3/17
3/8" = 1'-0"

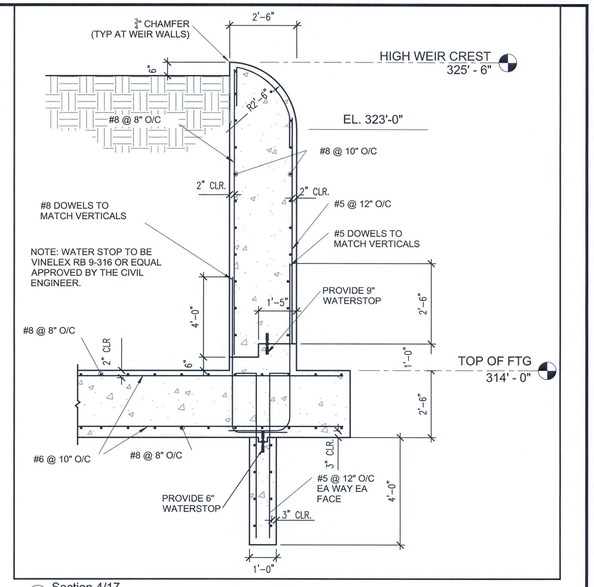

4 Section 4/17
3/8" = 1'-0"

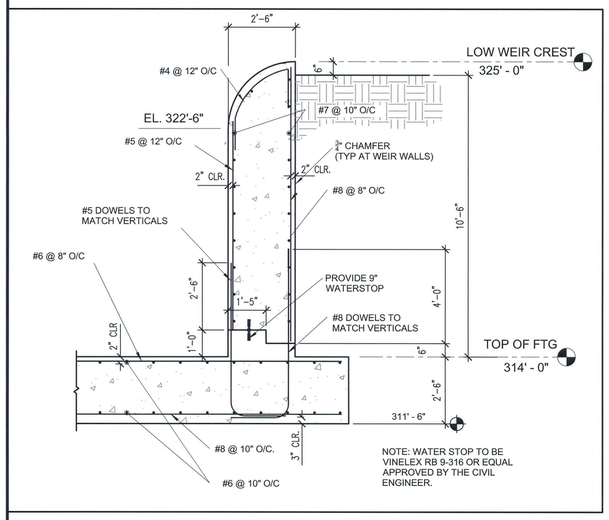

5 Section 5/17
3/8" = 1'-0"

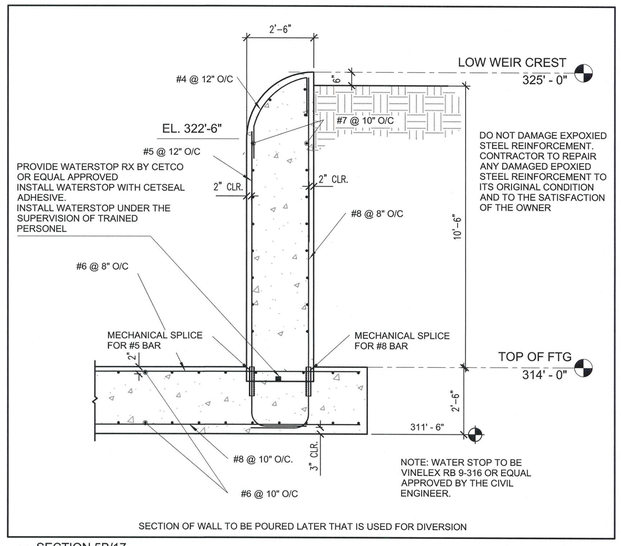

7 SECTION 5B/17
3/8" = 1'-0"

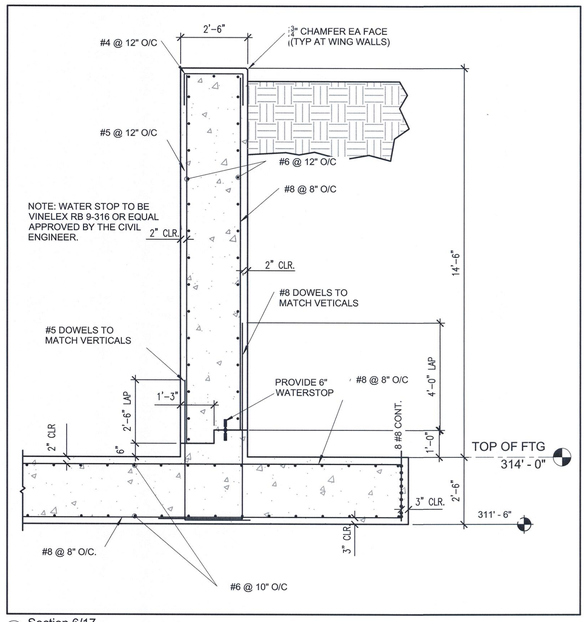

8 Section 6/17
3/8" = 1'-0"

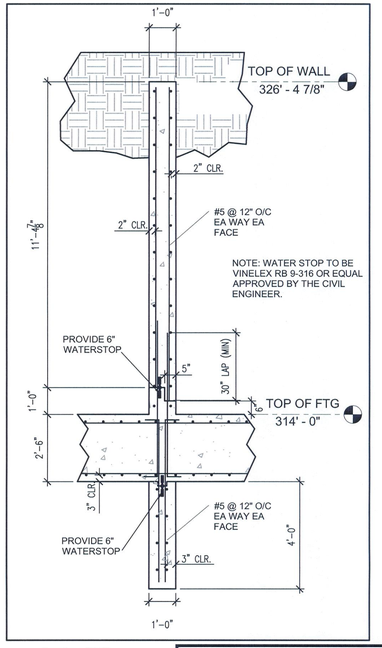

9 Section 7/17
3/8" = 1'-0"

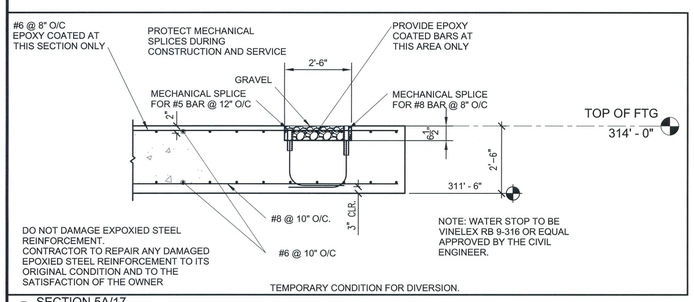

6 SECTION 5A/17
3/8" = 1'-0"

GRAPHIC SCALE

1 0 0.5 1 2

SCALE: 1" = 1'

MISS UTILITY

THE CONTRACTOR SHALL CALL "MISS UTILITY" AT 1-800-257-7777 48 HOURS PRIOR TO THE START OF WORK. THE CONTRACTOR IS RESPONSIBLE FOR ENSURING THAT ALL UNDERGROUND UTILITIES IN THE AREA OF PROPOSED WORK ARE LOCATED PRIOR O COMMENCING CONSTRUCTION WORK. THE CONTRACTOR IS RESPONSIBLE FOR COMPLIANCE WITH THE REQUIREMENTS OF CHAPTER 36A OF THE MONTGOMERY COUNTY CODE.

THE CONTRACTOR IS ALSO RESPONSIBLE FOR LOCATING ALL PRIVATE UTILITIES (NOT LOCATED BY MISS UTILITY) WITHIN M-NCPPC PROPERTY AT THEIR EXPENSE. ALL UTILITIES SHOWN ON THE PLANS ARE PROVIDED FOR INFORMATION ONLY AND SHALL BE CONSIDERED APPROXIMATE. M-NCPPC SHALL NOT BE RESPONSIBLE FOR LOCATING UNDERGROUND UTILITIES. ANY UTILTIES OR OTHER UNDERGROUND FACILITIES DAMAGED DURING CONSTRUCTION SHALL BE REPAIRED/REPLACED AT THE CONTRACTOR'S SOLE EXPENSE.

STRUCTURAL CERTIFICATION

I hereby certify that the structural design of this stormwater management facility is in accordance with applicable codes and that the plan for this has been designed for specified loading(s) as indicated hereon.

Design Engineer Signature — Date: 8/22/16

PATRICIO PALAVECINO — Printed Name

20477 — Registration Number

ACI350 — Design Loading

STATE OF MARYLAND — PATRICIO O. PALAVECINO — No. 20477 — REGISTERED PROFESSIONAL ENGINEER

THE MARYLAND-NATIONAL CAPITAL PARK AND PLANNING COMMISSION, DEPARTMENT OF PARK AND PLANNING

M-NCPPC RECORD FILE NO. _____

REVIEWED BY _____

APPROVED BY CHIEF, CONSTRUCTION SECTION _____

DATE APPROVED _____

THIS IS NOT A PERMIT TO BEGIN CONSTRUCTION

This approval is for technical review only. For permit For permit information, contact Joy Childs, Construction Supervisor at (301)495-2574.

M.C.D.P.S. APPROVED FOR:

Stormwater Management:

Reviewed — Date

Approved — Date

N/A
S.M.File No.

Sediment Control Technical Requirements:

Reviewed — Date

Approved — Date

Administrative Requirements:

Reviewed — Date

232507
SEDIMENT CONTROL PERMIT No.

NOTE

MCDPS APPROVAL OF THIS PLAN WILL EXPIRE ONE YEAR FROM THE DATE OF APPROVAL IF THE PROJECT HAS NOT STARTED UNLESS THE PERMIT HAS BEEN EXTENDED.

THIS APPROVAL DOES NOT NEGATE THE NEED OF A MCDPS ACCESS PERMIT.

STORMWATER MANAGEMENT
POND MAINTENANCE
SEQUENCE NO. 826
STRUCTURAL - SECTIONS

PUEBLO ROAD

GAITHERSBURG (9th) ELECTION DISTRICT
MONTGOMERY COUNTY, MARYLAND

CPJ Associates
Charles P. Johnson & Associates, Inc.
Civil and Environmental Engineers • Planners • Landscape Architects • Surveyors
1751 Elton Rd., Ste. 300 Silver Spring, MD 20903 301.434.7000 Fax: 301.434.9394
www.cpja.com • Gaithersburg, MD • Frederick, MD • Stevensville, MD • Fairfax, VA

CLIENT: Montgomery County
Department of Environmental Protection
255 Rockville Pike, Suite 120
Rockville, Maryland 20850-4166
Phone: (240) 777-7725
Contact: Mr. Gene Gopenko

PRELIMINARY PLAN NO: N/A	SITE PLAN NO: N/A
DESIGN JBB	SHEET 17 OF 24
DRAFT GC	
DATE APRIL, 2016	FILE NO: 36-188-24.02B
SCALE AS-SHOWN	

COPYRIGHT © LATEST DATE HEREON CHARLES P. JOHNSON & ASSOCIATES, INC. ALL RIGHTS RESERVED. UNAUTHORIZED USE OR REPRODUCTION IS PROHIBITED.

Attached Xrefs: TB24x36

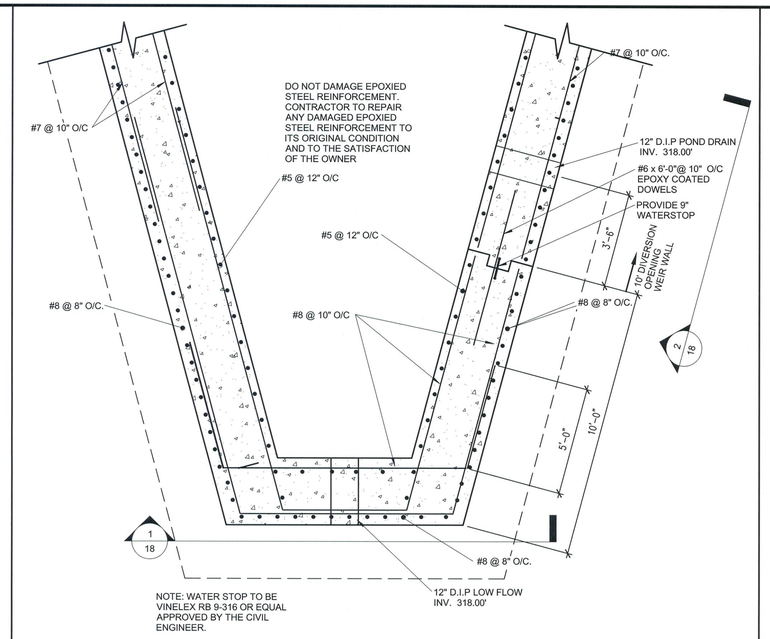

A PARTIAL PLAN A/18
3/8" = 1'-0"

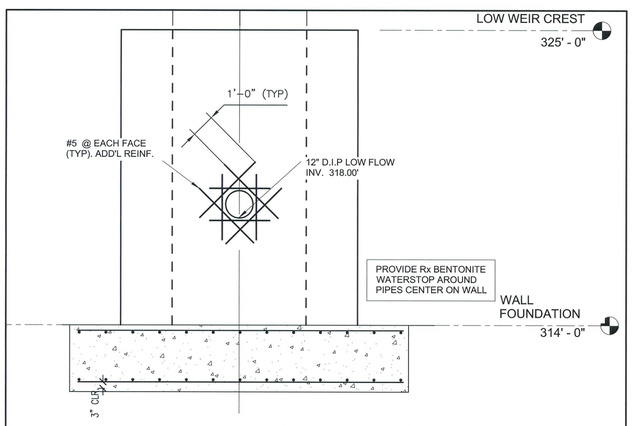

1 SECTION 1/18
3/8" = 1'-0"

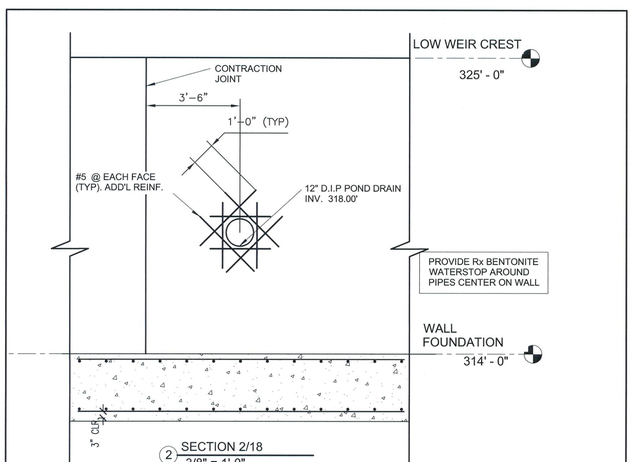

2 SECTION 2/18
3/8" = 1'-0"

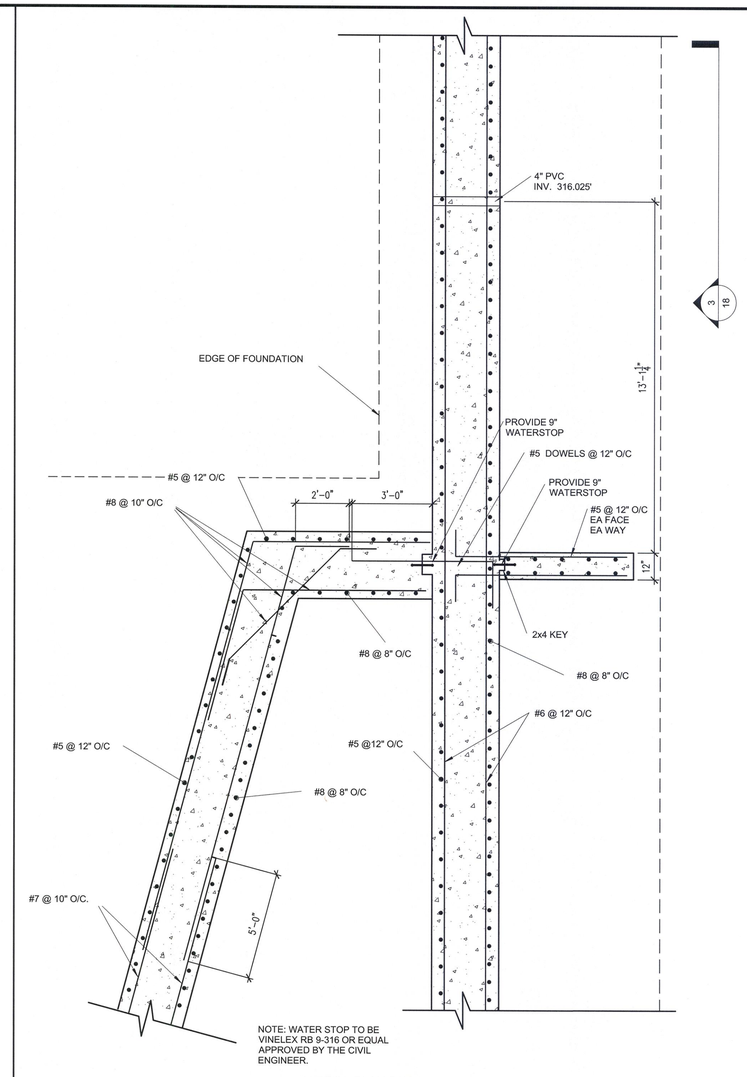

B PARTIAL PLAN B/18
3/8" = 1'-0"

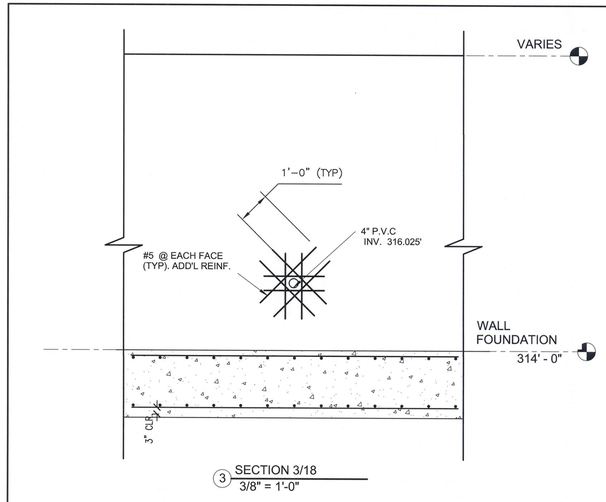

3 SECTION 3/18
3/8" = 1'-0"

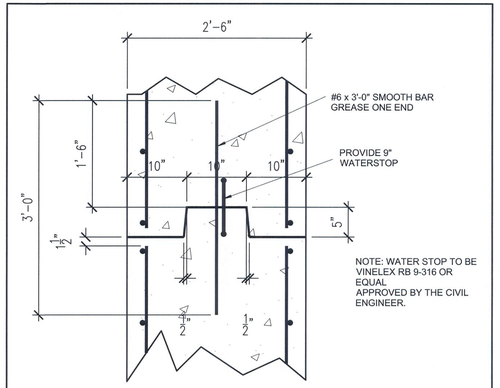

C STEM CONTRACTION JOINT DETAILS
1" = 1'-0"

GRAPHIC SCALE
1 0 0.5 1 2
SCALE: 1" = 1'

M.C.D.P.S. APPROVED FOR:

Stormwater Management:

Reviewed Date

Approved Date

N/A
S.M.File No.

Sediment Control Technical Requirements:

Reviewed Date

Approved Date

Administrative Requirements:

Reviewed Date

232507
SEDIMENT CONTROL PERMIT No.

NOTE

MCDPS APPROVAL OF THIS PLAN WILL EXPIRE ONE YEAR FROM THE DATE OF APPROVAL IF THE PROJECT HAS NOT STARTED UNLESS THE PERMIT HAS BEEN EXTENDED.

THIS APPROVAL DOES NOT NEGATE THE NEED OF A MCDPS ACCESS PERMIT.

THE MARYLAND–NATIONAL CAPITAL PARK AND PLANNING COMMISSION, DEPARTMENT OF PARK AND PLANNING

M–NCPPC RECORD FILE NO.

REVIEWED BY

APPROVED BY
CHIEF, CONSTRUCTION SECTION

DATE APPROVED

THIS IS NOT A PERMIT TO BEGIN CONSTRUCTION

This approval is for technical review only. For permit For permit information, contact Jay Childs, Construction Supervisor at (301)495–2574.

STRUCTURAL CERTIFICATION

I hereby certify that the structural design of this stormwater management facility is in accordance with applicable codes and that the plan for this has been designed for specified loading(s) as indicated hereon.

Design Engineer Signature — Date 8/22/16

PATRICIO PALAVECINO — Printed Name

20477 — Registration Number

ACI350 — Design Loading

STATE OF MARYLAND · PATRICIO O. PALAVECINO · No. 20477 · REGISTERED PROFESSIONAL ENGINEER

MISS UTILITY

THE CONTRACTOR SHALL CALL "MISS UTILITY" AT 1–800–257–7777 48 HOURS PRIOR TO THE START OF WORK. THE CONTRACTOR IS RESPONSIBLE FOR ENSURING THAT ALL UNDERGROUND UTILITIES IN THE AREA OF PROPOSED WORK ARE LOCATED PRIOR O COMMENCING CONSTRUCTION WORK. THE CONTRACTOR IS RESPONSIBLE FOR COMPLIANCE WITH THE REQUIREMENTS OF CHAPTER 36A OF THE MONTGOMERY COUNTY CODE.

THE CONTRACTOR IS ALSO RESPONSIBLE FOR LOCATING ALL PRIVATE UTILITIES (NOT LOCATED BY MISS UTILITY) WITHIN M–NCPPC PROPERTY AT THEIR EXPENSE. ALL UTILITIES SHOWN ON THE PLANS ARE PROVIDED FOR INFORMATION ONLY AND SHALL BE CONSIDERED APPROXIMATE. M–NCPPC SHALL NOT BE RESPONSIBLE FOR LOCATING UNDERGROUND UTILITIES. ANY UTILITIES OR OTHER UNDERGROUND FACILITIES DAMAGED DURING CONSTRUCTION SHALL BE REPAIRED/REPLACED AT THE CONTRACTOR'S SOLE EXPENSE.

STORMWATER MANAGEMENT POND MAINTENANCE SEQUENCE NO. 826 STRUCTURAL - SECTIONS AND PLANS

PUEBLO ROAD

GAITHERSBURG (9th) ELECTION DISTRICT MONTGOMERY COUNTY, MARYLAND

CPJ Associates

Charles P. Johnson & Associates, Inc.

Civil and Environmental Engineers • Planners • Landscape Architects • Surveyors

1751 Elton Rd., Ste. 300 Silver Spring, MD 20903 301.434.7000 Fax: 301.434.9394

www.cpja.com • Gaithersburg, MD • Frederick, MD • Stevensville, MD • Fairfax, VA

CLIENT: Montgomery County
Department of Environmental Protection
255 Rockville Pike, Suite 120
Rockville, Maryland 20850-4166
Phone: (240) 777-7725
Contact: Mr. Gene Gopenko

PRELIMINARY PLAN NO: N/A	SITE PLAN NO: N/A
DESIGN JBB	SHEET 18 OF 24
DRAFT GC	
DATE APRIL, 2016	FILE NO: 36-188-24.02B
SCALE AS-SHOWN	

COPYRIGHT © LATEST DATE HEREON CHARLES P. JOHNSON & ASSOCIATES, INC. ALL RIGHTS RESERVED, UNAUTHORIZED USE OR REPRODUCTION IS PROHIBITED.

Attached Xrefs: TB24x36

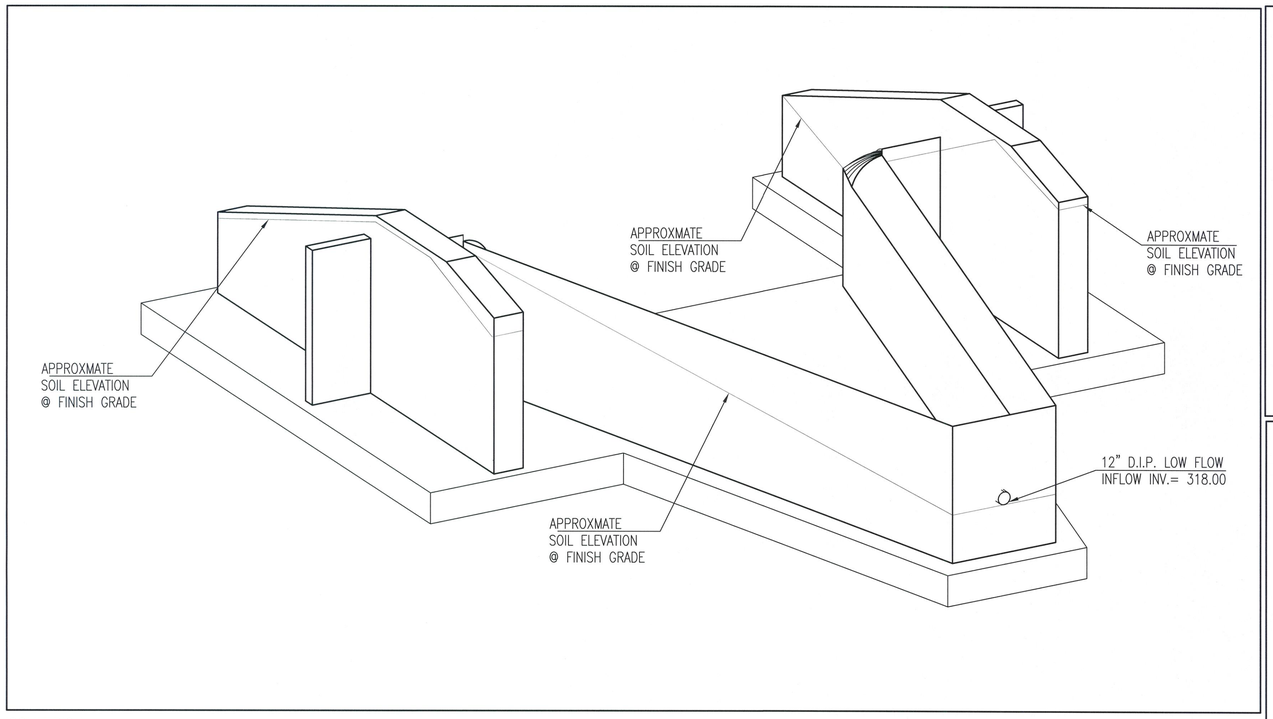

1 ISOMETRIC 1
3/16" = 1'-0"

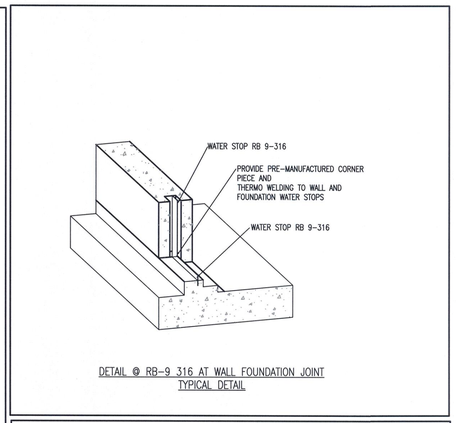

DETAIL @ RB-9 316 AT WALL FOUNDATION JOINT
TYPICAL DETAIL

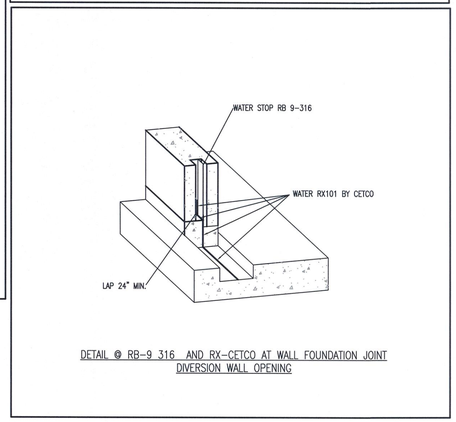

DETAIL @ RB-9 316 AND RX-CETCO AT WALL FOUNDATION JOINT
DIVERSION WALL OPENING

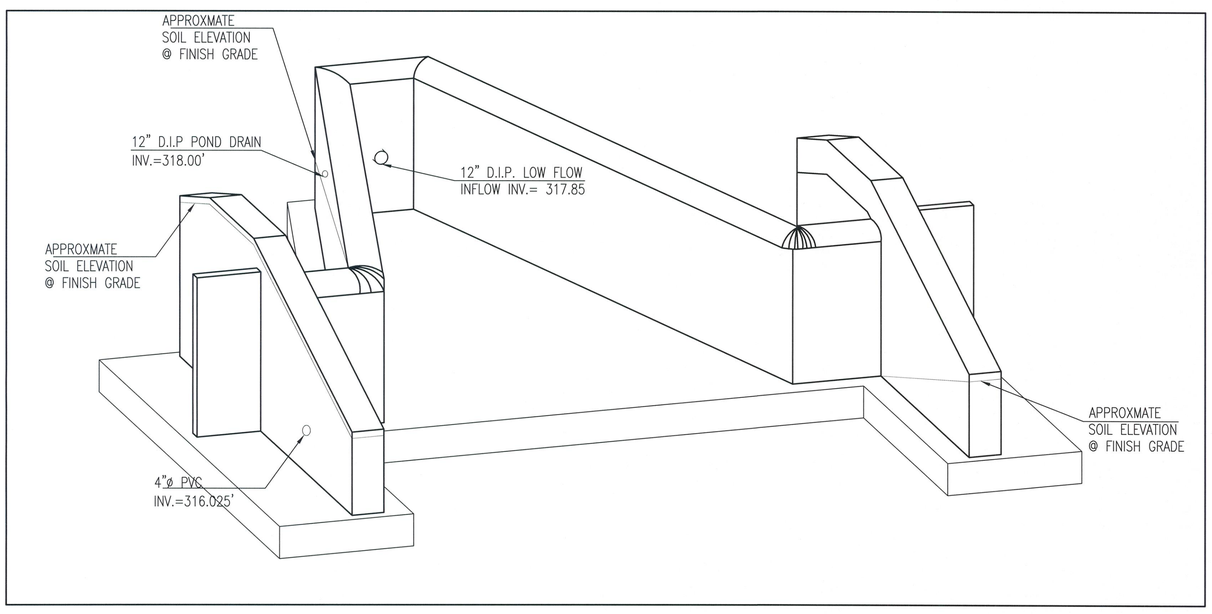

2 ISOMETRIC 2
3/16" = 1'-0"

GRAPHIC SCALE
1 0 0.5 1 2
SCALE: 1" = 1'

THE MARYLAND-NATIONAL CAPITAL PARK AND PLANNING COMMISSION, DEPARTMENT OF PARK AND PLANNING

M-NCPPC RECORD FILE NO. _____

REVIEWED BY _____

APPROVED BY _____
CHIEF, CONSTRUCTION SECTION

DATE APPROVED _____

THIS IS NOT A PERMIT
TO BEGIN CONSTRUCTION

This approval is for technical review only. For permit For permit information, contact Jay Childs, Construction Supervisor at (301)495-2574.

M.C.D.P.S.
APPROVED FOR:

Stormwater Management:

Reviewed Date

Approved Date

N/A
S.M.File No.

Sediment Control Technical Requirements:

Reviewed Date

Approved Date

Administrative Requirements:

Reviewed Date

232507
SEDIMENT CONTROL PERMIT No.

NOTE

MCDPS APPROVAL OF THIS PLAN WILL EXPIRE ONE YEAR FROM THE DATE OF APPROVAL IF THE PROJECT HAS NOT STARTED UNLESS THE PERMIT HAS BEEN EXTENDED.

THIS APPROVAL DOES NOT NEGATE THE NEED OF A MCDPS ACCESS PERMIT.

STRUCTURAL CERTIFICATION

I hereby certify that the structural design of this stormwater management facility is in accordance with applicable codes and that the plan for this has been designed for specified loading(s) as indicated hereon.

Design Engineer Signature — Date 8/22/16

PATRICIO PALAVECINO — Printed Name

20477 — Registration Number

ACI350 — Design Loading

STATE OF MARYLAND — PATRICIO O. PALAVECINO — No. 20477 — REGISTERED PROFESSIONAL ENGINEER

MISS UTILITY

THE CONTRACTOR SHALL CALL "MISS UTILITY" AT 1-800-257-7777 48 HOURS PRIOR TO THE START OF WORK. THE CONTRACTOR IS RESPONSIBLE FOR ENSURING THAT ALL UNDERGROUND UTILITIES IN THE AREA OF PROPOSED WORK ARE LOCATED PRIOR O COMMENCING CONSTRUCTION WORK. THE CONTRACTOR IS RESPONSIBLE FOR COMPLIANCE WITH THE REQUIREMENTS OF CHAPTER 36A OF THE MONTGOMERY COUNTY CODE.

THE CONTRACTOR IS ALSO RESPONSIBLE FOR LOCATING ALL PRIVATE UTILITIES (NOT LOCATED BY MISS UTILITY) WITHIN M-NCPPC PROPERTY AT THEIR EXPENSE. ALL UTILITIES SHOWN ON THE PLANS ARE PROVIDED FOR INFORMATION ONLY AND SHALL BE CONSIDERED APPROXIMATE. M-NCPPC SHALL NOT BE RESPONSIBLE FOR LOCATING UNDERGROUND UTILITIES. ANY UTILTIES OR OTHER UNDERGROUND FACILITIES DAMAGED DURING CONSTRUCTION SHALL BE REPAIRED/REPLACED AT THE CONTRACTOR'S SOLE EXPENSE.

STORMWATER MANAGEMENT
POND MAINTENANCE
SEQUENCE NO. 826
STRUCTURAL - ISOMETRIC VIEW

PUEBLO ROAD

GAITHERSBURG (9th) ELECTION DISTRICT
MONTGOMERY COUNTY, MARYLAND

CPJ Associates
Charles P. Johnson & Associates, Inc.
Civil and Environmental Engineers • Planners • Landscape Architects • Surveyors
1751 Elton Rd., Ste. 300 Silver Spring, MD 20903 301.434.7000 Fax: 301.434.9394
www.cpja.com • Gaithersburg, MD • Frederick, MD • Stevensville, MD • Fairfax, VA

CLIENT: Montgomery County
Department of Environmental Protection
255 Rockville Pike, Suite 120
Rockville, Maryland 20850-4166
Phone: (240) 777-7723
Contact: Mr. Gene Gopenko

COPYRIGHT © LATEST DATE HEREON
CHARLES P. JOHNSON & ASSOCIATES, INC.
ALL RIGHTS RESERVED, UNAUTHORIZED USE
OR REPRODUCTION IS PROHIBITED.

PRELIMINARY PLAN NO: N/A	SITE PLAN NO: N/A
DESIGN JBB	SHEET 19 OF 24
DRAFT GC	
DATE APRIL, 2016	FILE NO: 36-188-24.02B
SCALE AS-SHOWN	

Attached Xrefs: TB24x36

Montgomery County Maryland
Department of Permitting Services
255 Rockville Pike, 2nd Floor
Rockville, Maryland 20850-4153
(240) 777-6300 Fax (240) 777-6339
http://www.montgomerycountymd.gov/permittingservices/

MONTGOMERY COUNTY DEPARTMENT OF PERMITTING SERVICES
Stormwater Management Pond Construction Specifications
Revised January 2009

These specifications are appropriate to all ponds within the scope of the Standard for practice MD - 378. All references to ASTM, MSHA, and AASHTO specifications apply to the most recent version.

A. Construction Inspection by Designated Engineer

The construction of the pond and embankment shall be under the supervision of a Registered Professional Engineer. The engineer must submit written certification that the pond and embankment have been built in accordance with the approved plans to the Department of Permitting Services (DPS) along with a record drawing, soil compaction tests, concrete tests, and other required construction documentation. This should be done immediately following the completion of the project, unless otherwise designated on the plans. The engineer shall have the responsibility and authority to make minor changes in the plans in order to compensate for unusual soil conditions encountered during construction as long as changes do not adversely affect the integrity of the dam. Major changes to the design, which may result from site conditions encountered during construction, must be reviewed and approved by the Design Engineer, DPS, and the Montgomery Soil Conservation District prior to initiation of construction.

B. Site Preparation

Areas designated for borrow areas, embankment, and structural works shall be cleared, grubbed, and stripped of topsoil. All trees, vegetation, roots, and other objectionable material shall be removed. Channel banks and sharp breaks shall be sloped to no steeper than 1:1. All trees shall be cleared and grubbed within 15 feet of the toe of the embankment.

Areas to be covered by the reservoir will be cleared of all trees, brush, logs, fences, rubbish, and other objectionable material unless otherwise designated on the plans. Trees, brush, and stumps shall be cut approximately level with the ground surface. For dry stormwater management ponds, a minimum of a 25-foot radius around the inlet structure shall be cleared.

All cleared and grubbed material shall be disposed of outside and below the limits of the dam and reservoir as directed by the owner or his representative. A sufficient quantity of topsoil will be stockpiled in a suitable location for use on the embankment and other designated areas.

C. Earth Fill

Material - The fill material shall be taken from approved designated borrow areas. It shall be free of roots, stumps, wood, rubbish, stones greater than 4 inches, frozen or other objectionable materials. Fill material for the center of the embankment, and cut off trench shall conform to Unified Soil Classification GC, SC, CH, or CL and must have at least 30% passing the #200 sieve. Consideration may be given to the use of other materials in the embankment if designed by a geotechnical engineer. Such special designs must have construction supervised by a geotechnical engineer. Materials used in the outer shell of the embankment must have the pability to support vegetation of the quality required to prevent erosion of the embankment.

Placement - Areas on which fill is to be placed shall be scarified prior to placement of fill. Fill materials shall be placed in maximum 8 inch thick (before compaction) layers which are to be continuous over the entire length of the fill. The most permeable borrow material shall be placed in the downstream portion of the embankment. The principal spillway must be installed concurrently with fill placement and not excavated into the embankment.

Compaction - The movement of the hauling and spreading equipment over the fill shall be controlled so that the entire surface of each lift shall be traversed by not less than one tread track of the equipment or compaction shall be achieved by a minimum of four complete passes of a sheepsfoot, rubber tired or vibratory roller. Fill material shall contain sufficient moisture such that the required degree of compaction will be obtained with the equipment used. The fill material shall contain sufficient moisture so that if formed into a ball, it will not crumble; yet, not be so wet that water can be squeezed out.

The density of each lift shall not be less than 95% of maximum dry density with a moisture content within ±2% of the optimum. Each layer of fill shall be compacted as necessary to obtain that density, and is to be certified by the Engineer at the time of construction. All compaction is to be determined by AASHTO Method T-99 (Standard Proctor).

Cut Off Trench - The cutoff trench shall be excavated into impervious material along or parallel to the centerline of the embankment as shown on the plans. The bottom width of the trench shall be governed by the equipment used for excavation with the minimum width being four feet. The depth shall be at least four feet below existing grade or as shown on the plans. The side slopes of the trench shall be one to one or flatter. The backfill shall be compacted with construction equipment, rollers, or hand tampers to assure maximum density and minimum permeability.

Embankment Core
The core shall be parallel to the centerline of the embankment as shown on the plans. The top width of the core shall be minimum of four feet. The height shall extend up to at least the 10-year water elevation or as shown on the plans. The side slopes shall be 1 to 1 or flatter. The core shall be compacted with construction equipment, rollers, or hand tampers to assure maximum density and minimum permeability. In addition, the core shall be placed concurrently with the outer shall of the embankment.

D. Structure Backfill

Backfill adjacent to pipes or structures shall be of the type and quality conforming to that specified for the adjoining fill material. The fill shall be placed in horizontal layers not to exceed four inches in thickness and compacted by hand tampers or other manually directed compaction equipment. The material must fill completely all spaces under and adjacent to the pipe. At no time during the backfilling operation shall driven equipment be allowed to operate closer than four feet, measured horizontally, to any part of a structure. Under no circumstances shall equipment be driven over any part of a concrete structure or pipe, unless there is a compacted fill of 24 inches or greater over the structure or pipe.

Structure backfill may be flowable fill meeting the requirements of Maryland Department of Transportation, State Highway Administration Standard Specifications for Construction and Materials, Section 313 as modified. The mixture shall have a 100-200 psi; 28 day unconfined compressive strength. The flowable fill shall have a minimum pH of 4.0 and a minimum resistivity of 2,000 ohm-cm. Material shall be placed such that a minimum of six inches (measured perpendicular to the outside of the pipe) of flowable fill shall be under (bedding), over and, on the sides of the pipe. It only needs to extend up to the spring line for rigid conduits. Average slump of the fill shall be 7 inches to assure flowability of the material. Adequate measures shall be taken (sand bags, etc.) to prevent floating the pipe. When using flowable fill, all metal pipe shall be bituminous coated. Any adjoining soil fill shall be placed in horizontal layers not to exceed four inches in thickness and compacted by hand tampers or other manually directed compaction equipment. The material shall completely fill all voids adjacent to the flowable fill zone. At no time during the back filling operation shall driven equipment be allowed to operate closer than four feet, measured horizontally, to any part of a structure. Under no circumstances shall equipment be driven over any part of a structure or pipe unless there is a compacted fill of 24 inches or greater over the structure or pipe. Backfill material outside the structural backfill (flowable fill) zone shall be of the type and quality conforming to that specified for the core of the embankment or other embankment materials.

E. Pipe Conduits

All pipes shall be circular in cross section.

Corrugated Metal Pipe - All of the following criteria shall apply for corrugated metal pipe:

1. Materials – (Polymer Coated Steel Pipe) – Steel pipes with polymeric coatings shall have a minimum coating thickness of 0.01 inch (10 mil) on both sides of the pipe. This pipe and its appurtenances shall conform to the requirements of AASHTO Specification M-245 & M-246 with watertight coupling bands or flanges.

   Materials – (aluminum Coated Steel Pipe) – This pipe and its appurtenances shall conform to the requirements of AASHTO specification M-274 with watertight coupling bands or flanges. Aluminum Coated Steel Pipe, when used with flowable fill or when soil and/or water conditions warrant the need for increased durability, shall be fully bituminous coated per requirements of AASHTO Specification M-190 Type A. Any aluminum coating damaged or otherwise removed shall be replaced with cold applied bituminous coating compound. Aluminum surfaces that are to be in contact with concrete shall be painted with one coat of zinc chromate primer or two coats of asphalt.

   Materials – (aluminum Pipe) – This pipe and its appurtenances shall confirm to the requirements of AASHTO Specification M-196 or M-211 with watertight coupling bands or flanges. Aluminum Pipe, when used with flowable fill or when soil and/or water conditions warrant for increased durability, shall be fully bituminous coated per requirements of AASHTO Specification M-190 Type A. Aluminum surfaces that are to be in contact with concrete shall be painted with one coat of zinc chromate primer or two coats of asphalt. Hot dip galvanized bolts may be used for connections. The pH of the surrounding soils shall be between 4 and 9.

2. Coupling bands, anti-seep collars, end sections, etc., must be composed of the same material as the pipe. Metals must be insulated from dissimilar materials with use of rubber or plastic insulating materials at least 24 mils in thickness.

3. Connections - All connections with pipes must be completely watertight. The drain pipe or barrel connections to the riser shall be welded all around when the pipe and riser are metal. Anti-seep collars shall be connected to the pipe in such a manner as to be completely watertight. Dimple bands are not considered to be watertight.

   All connections shall use a rubber or neoprene gasket when joining pipe sections. The end of each pipe shall be re-rolled an adequate number of corrugations to accommodate the band width. Pipe ends must be matched and numbered by the manufacturer. The following type connections are acceptable for pipes less than 24 inches in diameter; flanges on both ends of the pipe with a circular 3/8 inch closed cell neoprene gasket, pre-punched to the flange bolt circle, sandwiched between adjacent flanges; a 12-inch wide standard lap type band with 12-inch wide by 3/8 inch thick, closed cell circular neoprene gasket; and a 12-inch wide hugger type band with o-ring gaskets having a minimum diameter of ½-inch greater than the corrugation depth. Pipes 24 inches in diameter and larger shall be connected by a 24-inch long annular corrugated band using a minimum of 4 (four) rods and lugs, 2 on each connecting pipe end, per current DPS band detail. A 24-inch wide by 3/8-inch thick closed cell circular neoprene gasket will be installed with 12 inches on the end of each pipe. Flanged joints with 3/8-inch closed cell gaskets the full width of the flange is also acceptable.

   Helically corrugated pipe shall have either continuously welded seams or have lock seams with internal caulking or a neoprene bead.

4. Bedding - The pipe shall be firmly and uniformly bedded throughout its entire length. Where rock or soft, spongy or other unstable soil is encountered, all such material shall be removed and replaced with suitable earth compacted to provide adequate support.

5. Backfilling shall conform to "Structure Backfill."

6. Other details (anti-seep collars, valves, etc.) shall be as shown on the drawings.

Reinforced Concrete Pipe - All of the following criteria shall apply for reinforced concrete pipe:

1. Materials - RCP shall have bell and spigot joints with rubber gaskets and shall meet ASTM Designation C-361. Pipes must be labeled in full accordance with ASTM C-361, including the ASTM C-361 designation on the inside of each section of pipe, and all pipes must be clearly marked by the manufacturer prior to delivery to the job site. Pipes with multiple designations will be rejected.

2. Bedding - Reinforced concrete pipe conduits shall be laid in a concrete bedding/cradle for their entire length. This bedding/cradle shall consist of high slump concrete placed under the pipe and up the sides of the pipe at least 50% of its outside diameter with a minimum thickness of 6-inches. Where a concrete cradle is not needed for structural reasons, flowable fill may be used as described in the "Structure Backfill" section of this standard. Gravel bedding is not permitted.

3. Laying pipe - Bell and spigot pipe shall be placed with the bell end upstream. Joints shall be made in accordance with recommendations of the manufacturer of the material. After the joints are sealed for the entire line, the bedding shall be placed so that all spaces under the pipe are filled. Care shall be exercised to prevent any deviation from the original line and grade of the pipe. The first joint must be located within four feet from the riser.

4. Backfilling shall conform to "Structure Backfill."

5. Other details (anti-seep collars, valves, etc.) shall be as shown on the drawings.

Plastic Pipe - The following criteria shall apply for plastic pipe:

1. Materials - PVC pipe shall be PVC-1120 or PVC-1220 conforming to ASTM D-1785 or ASTM D-2241. Corrugated High Density Polyethylene (HDPE) pipe, couplings and fittings shall conform to the following: 4 – 10 inch pipe shall meet the requirement of AASHTO M252 Type S, and 12 through 24 inch shall meet the requirements of AASHTO M294 Type S.

2. Joints and connections to anti-seep collars shall be completely watertight.

3. Bedding - The pipe shall be firmly and uniformly bedded throughout its entire length. Where rock or soft, spongy or other unstable soil is encountered, all such material shall be removed and replaced with suitable earth compacted to provide adequate support.

4. Backfilling shall conform to "Structure Backfill."

5. Other details (anti-seep collars, valves, etc.) shall be as shown on the drawings.

F. Drainage Diaphragms

When a drainage diaphragm is used, a registered professional engineer will supervise the design and construction inspection.

G. Concrete

Concrete design shall meet the requirements of ACI 350, Environmental Engineering Concrete Structures, with freezing and thawing exposures. Concrete shall be a type II or IIA cement, with a 28 day compressive strength of 4500 psi for cast in place and 5000 psi for pre-cast structures. Concrete shall also meet the requirements of Maryland Department of Transportation, State Highway Administration Standard Specifications for Construction and Materials, Section 420, Mix No. 6.

H. Rock Rip-rap

Rock rip-rap shall meet the requirements of Maryland Department of Transportation, State Highway Administration Standard Specification for Construction and Materials, Section 311.

Geotextile shall be placed under all rip-rap and shall meet the requirements of Maryland Department of Transportation, State Highway Administration Standard Specifications for Construction and Materials, Section 921.09, Class C.

I. Care of Water during Construction

All work on permanent structures shall be carried out in areas free from water. The Contractor shall construct and maintain all temporary dikes, levees, cofferdams, drainage channels, and stream diversions necessary to protect the areas to be occupied by the permanent works. The contractor shall also furnish, install, operate, and maintain all necessary pumping and other equipment required for removal of water from the various parts of the work and for maintaining the excavations, foundation, and other parts of the work free from water as required or directed by the engineer for constructing each part of the work. After having served their purpose, all temporary protective works shall be removed or leveled, and graded to the extent required to prevent obstruction in any degree whatsoever of the flow of water to the spillway or outlet works, and so as not to interfere in any way with the operation or maintenance of the structure. Stream diversions shall be maintained until the full flow can be passed through the permanent works. The removal of water from the required excavation and the foundation shall be accomplished in a manner and to the extent that will maintain stability of the excavated slopes and bottom of required excavations and will allow satisfactory performance of all construction operations. During the placing and compacting of material in required excavations the water level at the locations being refilled shall be maintained below the bottom of the excavation at such locations which may require draining the water to sumps from which the water shall be pumped.

J. Stabilization

All borrow areas shall be graded to provide proper drainage and left in a sightly condition. All exposed surfaces of the embankment, spillway, spoil and borrow areas, and berms shall be stabilized by seeding, liming, fertilizing and mulching in accordance with the Maryland Soil Conservation Service Standards and Specifications for Critical Area Planting (MD-342) or as shown on the accompanying drawings.

K. Erosion and Sediment Control

Construction operations will be carried out in such a manner that erosion will be controlled and water and air pollution minimized. State and local laws concerning pollution abatement will be followed. Construction plans shall detail erosion and sediment control measures to be employed during the construction process.

KIM

BORING NUMBER SWM-1
PAGE 1 OF 1

CLIENT Charles P. Johnson & Associates
PROJECT NAME Task Order No. 12, Pueblo Road
PROJECT NUMBER 8526
PROJECT LOCATION Gaithersburg, Maryland
DATE STARTED 10/10/08 COMPLETED 10/10/08
GROUND ELEVATION 324 ft HOLE SIZE 6 inches
DRILLING CONTRACTOR K.E.I
GROUND WATER LEVELS:
DRILLING METHOD Hollow Stem Auger
AT TIME OF DRILLING ---
LOGGED BY REN CHECKED BY MSK
AT END OF DRILLING ---
NOTES
AFTER DRILLING ---

DEPTH (ft)	GRAPHIC LOG	MATERIAL DESCRIPTION	SAMPLE TYPE NUMBER	RECOVERY % (RQD)	BLOW COUNTS (N VALUE)	POCKET PEN. (tsf)	DRY UNIT WT. (pcf)	▲ SPT N VALUE ▲ 20 40 60 80	PL MC LL	☐ FINES CONTENT (%) ☐ 20 40 60 80
0		1 inch topsoil								
		silt and sand FILL, with gravel and trace of roots, moist, brown	SS 1		5-4-7 (11)					
			SS 2		5-5-9 (14)					
5		sandy SILT (ML), with gravel, moist, brown	SS 3		6-9-13 (22)					
			SS 4		14-16-19 (35)					
10		DISINTEGRATED ROCK, moist, brown								
		auger refusal at 14 feet	SS 5		100					

Bottom of borehole at 14.0 feet.

KIM

BORING NUMBER SWM-2
PAGE 1 OF 1

CLIENT Charles P. Johnson & Associates
PROJECT NAME Task Order No. 12, Pueblo Road
PROJECT NUMBER 8526
PROJECT LOCATION Gaithersburg, Maryland
DATE STARTED 10/10/08 COMPLETED 10/10/08
GROUND ELEVATION 325 ft HOLE SIZE 6 inches
DRILLING CONTRACTOR K.E.I
GROUND WATER LEVELS:
DRILLING METHOD Hollow Stem Auger
AT TIME OF DRILLING ---
LOGGED BY REN CHECKED BY MSK
AT END OF DRILLING ---
NOTES
▼ 24hrs AFTER DRILLING 9.50 ft / Elev 315.50 ft

DEPTH (ft)	GRAPHIC LOG	MATERIAL DESCRIPTION	SAMPLE TYPE NUMBER	RECOVERY % (RQD)	BLOW COUNTS (N VALUE)	POCKET PEN. (tsf)	DRY UNIT WT. (pcf)	▲ SPT N VALUE ▲ 20 40 60 80	PL MC LL	☐ FINES CONTENT (%) ☐ 20 40 60 80
0		1 inch topsoil								
		silt and sand FILL, moist, brown	SS 1		7-6-7 (13)					
5			SS 2		9-12-9 (21)					
			SS 3		3-3-4 (7)					
10		▼ sandy SILT (ML), moist, brown	SS 4		2-2-2 (4)					
15		DISINTEGRATED ROCK, moist, gray	SS 5		21-28-58 (86)					
			SS 6		100					

Bottom of borehole at 19.0 feet.

KIM

BORING NUMBER SWM-3
PAGE 1 OF 1

CLIENT Charles P. Johnson & Associates
PROJECT NAME Task Order No. 12, Pueblo Road
PROJECT NUMBER 8526
PROJECT LOCATION Gaithersburg, Maryland
DATE STARTED 10/10/08 COMPLETED 10/10/08
GROUND ELEVATION 320 ft HOLE SIZE 6 inches
DRILLING CONTRACTOR K.E.I
GROUND WATER LEVELS:
DRILLING METHOD Hollow Stem Auger
AT TIME OF DRILLING ---
LOGGED BY REN CHECKED BY MSK
▼ AT END OF DRILLING 7.90 ft / Elev 312.10 ft
NOTES
▼ 24hrs AFTER DRILLING 4.70 ft / Elev 315.30 ft

DEPTH (ft)	GRAPHIC LOG	MATERIAL DESCRIPTION	SAMPLE TYPE NUMBER	RECOVERY % (RQD)	BLOW COUNTS (N VALUE)	POCKET PEN. (tsf)	DRY UNIT WT. (pcf)	▲ SPT N VALUE ▲ 20 40 60 80	PL MC LL	☐ FINES CONTENT (%) ☐ 20 40 60 80
0		1 inch topsoil								
		silt and sand FILL, with gravel, moist, brown	SS 1		4-4-5 (9)					
5		▼ sandy SILT (ML), moist, brown	SS 2		7-7-7 (14)					
			SS 3		8-10-17 (27)					
10		DISINTEGRATED ROCK, moist, gray	SS 4		65-100					
		auger refusal at 14 feet	SS 5		100					

Bottom of borehole at 14.0 feet.

KIM

BORING NUMBER SWM-4
PAGE 1 OF 1

CLIENT Charles P. Johnson & Associates
PROJECT NAME Task Order No. 12, Pueblo Road
PROJECT NUMBER 8526
PROJECT LOCATION Gaithersburg, Maryland
DATE STARTED 10/10/08 COMPLETED 10/10/08
GROUND ELEVATION 328 ft HOLE SIZE 6 inches
DRILLING CONTRACTOR K.E.I
GROUND WATER LEVELS:
DRILLING METHOD solid stem auger
AT TIME OF DRILLING ---
LOGGED BY REN CHECKED BY MSK
AT END OF DRILLING ---
NOTES
AFTER DRILLING ---

DEPTH (ft)	GRAPHIC LOG	MATERIAL DESCRIPTION	SAMPLE TYPE NUMBER	RECOVERY % (RQD)	BLOW COUNTS (N VALUE)	POCKET PEN. (tsf)	DRY UNIT WT. (pcf)	▲ SPT N VALUE ▲ 20 40 60 80	PL MC LL	☐ FINES CONTENT (%) ☐ 20 40 60 80
0		4 inches topsoil								
		sandy SILT (ML), moist, brown	SS 1		9-9-10 (19)					
5			SS 2		11-16-16 (32)					
		DISINTEGRATED ROCK, moist, brown								
		auger refusal at 7.5 feet	SS 3		20-31-46 (77)					

Bottom of borehole at 7.5 feet.

CONSTRUCTION INSPECTION
CHECK–OFF LIST FOR STORMWATER MANAGEMENT PONDS

STAGE	DESIGN ENGINEER (DE)	GEOTECHNICAL ENGINEER (GEO)	COUNTY INSPECTOR	MNCPPC & OTHER
* MANDATORY NOTIFICATION: inspection and approval by the parties indicated is required at these points prior to proceeding with construction. The permittee is required to give the required inspection parties twenty–four (24) hours notice (DPS telephone 240/777–6300). The DPS inspector may waive an inspection, provided the design engineer and/or geotechnical engineer makes the required inspection per a prior scheduled arrangement which has been confirmed with the DPS inspector. Work completed without the necessary party's approval may result in the permittee having to remove and reconstruct the unapproved work. The permittee must maintain a "record set" of approved SC/SM plans on site.	INITIALS/DATE	INITIALS/DATE	INITIALS/DATE	INITIALS/DATE
1. Pre–construction meeting & field review of tree save flagging/tree protection	*	*	*	*
2. Sediment control installation			*	
3. Dewatering (GEO) and stream diversion (DE)	*	*	*	
4. Clearing, grubbing, subgrade preparation		*	*	
5. Core trench excavation and dewatering, if required (GEO)		*	*	
6. Core trench dimensions, location (DE) or (GEO), backfill and compaction tests (GEO)	*	*	*	
7. Construction of principle spillway and riser:				
7a. – Barrel class. (ASTM C361) (DE) – Pipe certification from supplier (DE) – Pipe assembled in place on acceptable subgrade (GEO) – Watertight joints (DE) – Articulated joint 2 feet from riser (DE) – Lifts, compaction, soil material (GEO) – Location, dimensions (DE)	*	*	*	
	N\A	N\A	N\A	N\A
7b. – Concrete cradle dimensions. (DE) – Concrete strength tests (GEO)	*	*	*	
	N\A	N\A	N\A	N\A
7c. – Concrete strength tests (GEO) – Grouting annular space (DE)	*	*	*	
7d. – Filter diaphragm gradation and dimensions (if applicable) (GEO)	N\A	* N\A	* N\A	N\A
7e. – Riser footing subgrade (GEO), dimensions, rebar (DE) – Concrete strength tests (GEO)	*	*	*	
7f. Precast riser: – Shop drawings approved by County, reviewed by DE – Visual inspection of riser (no cracks, spoulding, exposed steel, incorrect dimensions, honeycombing) (DE) – Certification from supplier (DE) – Watertight joints (DE) – Wall and opening dimensions per plan (DE)	N\A	N\A	N\A	N\A
7g. Cast–in Place Weir Wall: – Wall and opening dimensions per plan (DE) – Re–bar size, number, spacing acceptable (DE) – Concrete testing and certification (GEO) – Watertight joints (DE) – Extreme weather provisions (DE)	*	*	*	
7h. Valve/orifice plate installation (DE). Note: may be delayed for SC purposes.	*		*	
8. Backfilling of principal spillway (GEO)		*	*	
9. Underdrain (if applicable) location (DE), pipe size (DE), filter cloth (DE), gravel (DE), field adjustments (GEO).	* N\A	* N\A	* N\A	N\A
10. Channelization work and pond outfall protection (DE) or (GEO)	*		*	
11. Diversion of stream through principal spillway (DE)	*	*	*	
12. Construction of embankment – Lifts, compaction, soil material (GEO) – Location, dimension (DE)	*	*	*	
13. Construction of emergency spillway in cut (DE)	* N\A	N\A	* N\A	N\A
14. Field verification of constructed contours (DE)	*		*	
15. Permanent vegetative stabilization, delivery tickets from supplier			*	
16. Submit record drawing and documentation (DE) and (GEO)	*	*		
17. Other items. (Set valve(s) to design opening values, if required) (DE)	* N\A	N\A	* N\A	N\A
18. Final inspection (DE) and (GEO)	*	*	*	

NOTES:
1. Permittee to supply Design Engineer with delivery tickets for all materials used in Pond construction, for submission with the as–built package, DPS Inspection Telephone: (240) 777–6300.
2. See construction specifications for detailed requirements. MNCP&PC Inspection Telephone: (301) 495–4571
3. A copy of this completed checklist must be submitted as part of the stormwater management as–built package. MNCP&PC Inspection Telephone: (301) 495–4571

STATE OF MARYLAND
BRIAN KEITH DAVIS
No. 19808
PROFESSIONAL ENGINEER

PROFESSIONAL CERTIFICATION
I HEREBY CERTIFY THAT THESE DOCUMENTS WERE PREPARED OR APPROVED BY ME, AND THAT I AM A DULY LICENSED PROFESSIONAL ENGINEER UNDER THE LAWS OF THE STATE OF MARYLAND.
LICENSE # 19808
EXPIRATION DATE: 01/06/2017

MISS UTILITY

THE CONTRACTOR SHALL CALL "MISS UTILITY" AT 1–800–257–7777 48 HOURS PRIOR TO THE START OF WORK. THE CONTRACTOR IS RESPONSIBLE FOR ENSURING THAT ALL UNDERGROUND UTILITIES IN THE AREA OF PROPOSED WORK ARE LOCATED PRIOR O COMMENCING CONSTRUCTION WORK. THE CONTRACTOR IS RESPONSIBLE FOR COMPLIANCE WITH THE REQUIREMENTS OF CHAPTER 36A OF THE MONTGOMERY COUNTY CODE.

THE CONTRACTOR IS ALSO RESPONSIBLE FOR LOCATING ALL PRIVATE UTILITIES (NOT LOCATED BY MISS UTILITY) WITHIN M–NCPPC PROPERTY AT THEIR EXPENSE. ALL UTILITIES SHOWN ON THE PLANS ARE PROVIDED FOR INFORMATION ONLY AND SHALL BE CONSIDERED APPROXIMATE. M–NCPPC SHALL NOT BE RESPONSIBLE FOR LOCATING UNDERGROUND UTILITIES. ANY UTILITIES OR OTHER UNDERGROUND FACILITIES DAMAGED DURING CONSTRUCTION SHALL BE REPAIRED/REPLACED AT THE CONTRACTOR'S SOLE EXPENSE.

THE MARYLAND–NATIONAL CAPITAL PARK AND PLANNING COMMISSION, DEPARTMENT OF PARK AND PLANNING

M–NCPPC RECORD FILE NO.
REVIEWED BY
APPROVED BY
CHIEF, CONSTRUCTION SECTION
DATE APPROVED

THIS IS NOT A PERMIT TO BEGIN CONSTRUCTION

This approval is for technical review only. For permit For permit information, contact Joy Childs, Construction Supervisor at (301)495–2574.

M.C.D.P.S. APPROVED FOR:

Stormwater Management:
Reviewed Date
Approved Date
N/A
S.M.File No.

Sediment Control Technical Requirements:
Reviewed Date
Approved Date

Administrative Requirements:
Reviewed Date
232507
SEDIMENT CONTROL PERMIT No.

NOTE
MCDPS APPROVAL OF THIS PLAN WILL EXPIRE ONE YEAR FROM THE DATE OF APPROVAL IF THE PROJECT HAS NOT STARTED UNLESS THE PERMIT HAS BEEN EXTENDED.

THIS APPROVAL DOES NOT NEGATE THE NEED OF A MCDPS ACCESS PERMIT.

STORMWATER MANAGEMENT
POND MAINTENANCE
SEQUENCE NO. 826
STORMWATER MANAGEMENT NOTES & BORING LOGS

PUEBLO ROAD

GAITHERSBURG (9th) ELECTION DISTRICT
MONTGOMERY COUNTY, MARYLAND

CPJ Associates
Charles P. Johnson & Associates, Inc.
Civil and Environmental Engineers • Planners • Landscape Architects • Surveyors
1751 Elton Rd., Ste. 300 Silver Spring, MD 20903 301.434.7000 Fax: 301.434.9394
www.cpja.com • Gaithersburg, MD • Frederick, MD • Stevensville, MD • Fairfax, VA

CLIENT: Montgomery County
Department of Environmental Protection
255 Rockville Pike, Suite 120
Rockville, Maryland 20850-4166
Phone: (240) 777-7723
Contact: Mr. Gene Gopenko

PRELIMINARY PLAN NO: N/A	SITE PLAN NO: N/A		
DESIGN JBB	SHEET 20	OF 24	
DRAFT GC			
DATE APRIL, 2016	FILE NO: 36-188-24.02B		
SCALE AS-SHOWN			

COPYRIGHT © LATEST DATE HEREON
CHARLES P. JOHNSON & ASSOCIATES, INC.
ALL RIGHTS RESERVED, UNAUTHORIZED USE OR REPRODUCTION IS PROHIBITED.

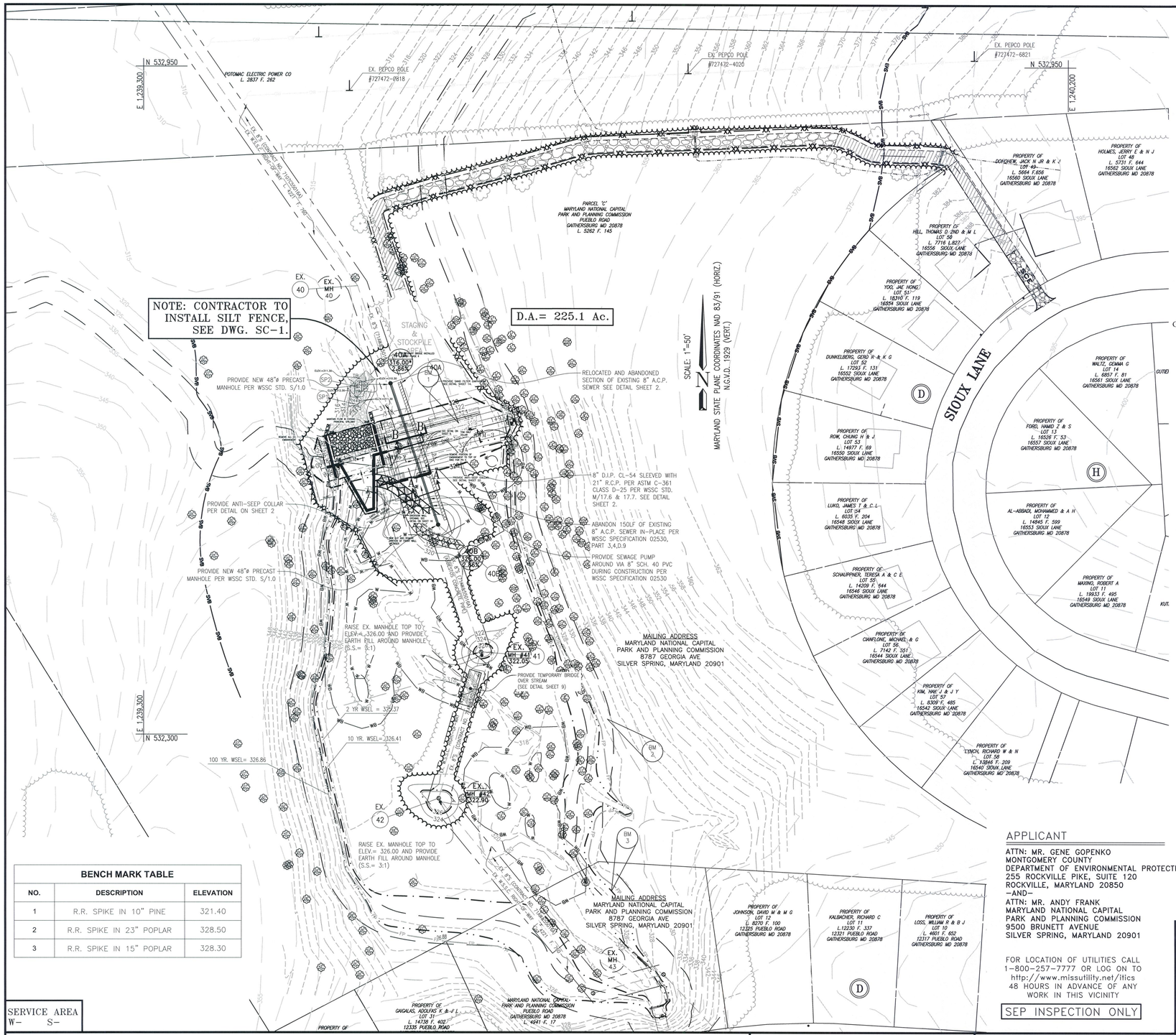

BENCH MARK TABLE		
NO.	DESCRIPTION	ELEVATION
1	R.R. SPIKE IN 10" PINE	321.40
2	R.R. SPIKE IN 23" POPLAR	328.50
3	R.R. SPIKE IN 15" POPLAR	328.30

SERVICE AREA
W- S-

WASHINGTON SUBURBAN SANITARY COMMISSION

CPJ Associates
Charles P. Johnson & Associates, Inc.
Civil and Environmental Engineers • Planners • Landscape Architects • Surveyors
1751 Elton Rd., Ste. 300 Silver Spring, MD 20903 301.434.7000 Fax: 301.434.9394
www.cpja.com • Gaithersburg, MD • Frederick, MD • Stevensville, MD • Fairfax, VA

PUEBLO ROAD
EXISTING SWM POND
RETROFIT
CONTRACT No. DA5392A12
08RMS6999A

LEGEND

- TEMPORARY BRIDGE CROSSING (TB)
- PROPOSED CONSTRUCTED SHALLOW WETLAND
- EXISTING TREE

General Notes:

1. All 8" Sewer Pipe to be ductile iron Class 54 except as shown.
2. All ductile iron pipe to be polyethylene encased in accordance with AWWA C105, Method A.
3. All ductile iron sewer pipes shall be lined in accordance with the specifications 02530.
4. Field Review by Jeff Blass Date: 01/20/10.
5. Design by: Jeff Blass Date: 01/20/10.
6. All utility installation must be in conformance with conditions of the Montgomery County Department of Permitting Services approved sediment control plan No. 232507 approved XX-XX-2014, and with all erosion and sediment control measures contained within this approved plan.
7. All manholes to be precast, see STD. DTL's S/1.0.
8. For sediment control devices to be installed by the contractor, see sheet 7 of CPJ No. 36-188-24.02B.
9. Notify WSSC's Systems Inspection Group at (301) 206-2357 at least 72 hours prior to the start of construction. Inspection of materials required for the project shall take place at the construction site.
10. All materials required under this contract shall be furnished by the applicant at no expense to WSSC in accordance with the Memorandum of Understanding.
11. The applicant's contractor shall contact Bill Eacho, Systems Inspection Group, at (301) 206-7363, at least two weeks prior to the start of construction to arrange a pre-construction meeting.
12. Stakeout for the proposed relocation shall be provided by the applicant's engineer.
13. Notify Karen Wright, Systems Control Group, at (301) 206-8416 at least 72 hours prior to shut down.
14. Notify the WSSC Environmental Group (301) 206-8077 at least 48 hours prior to the start of construction. The sediment control permit will be issued to the contractor at the pre-construction meeting.
15. Upon completion of construction, the applicant's contractor shall prepare as-builts and submit to the System Infrastructure Group Contract Manager.
16. The applicant's contractor will notify "MISS Utility" at least 48 hours in advance of any excavation work at 1-800-257-7777.
17. All work shall be performed in accordance with WSSC's "Standards and Details" and the Memorandum of Understanding.
18. All utility installation must be in conformance with the conditions of the Montgomery County Department of Permitting Services approved sediment control plan CPJ No. 36-188-24.02B, approved XX-XX-2013 and with all erosion and sediment control measures contained within this approved plan. The applicant is required to notify the WSSC Sediment Control Inspector of any changes and modifications to the Montgomery County Department of Permitting Services approved sediment control plan.
19. All manhole frames and covers shall be water tight with covers bolted and sealed on existing lead.

GRAPHIC SCALE
50 0 25 50 100
SCALE: 1" = 50'

APPLICANT

ATTN: MR. GENE GOPENKO
MONTGOMERY COUNTY
DEPARTMENT OF ENVIRONMENTAL PROTECTION
255 ROCKVILLE PIKE, SUITE 120
ROCKVILLE, MARYLAND 20850
-AND-
ATTN: MR. ANDY FRANK
MARYLAND NATIONAL CAPITAL
PARK AND PLANNING COMMISSION
9500 BRUNETT AVENUE
SILVER SPRING, MARYLAND 20901

FOR LOCATION OF UTILITIES CALL
1-800-257-7777 OR LOG ON TO
http://www.missutility.net/ifics
48 HOURS IN ADVANCE OF ANY
WORK IN THIS VICINITY

SEP INSPECTION ONLY

STATE OF MARYLAND
BRIAN KEITH DAVIS
19908
PROFESSIONAL ENGINEER

PROFESSIONAL CERTIFICATION
I HEREBY CERTIFY THAT THESE DOCUMENTS WERE PREPARED OR APPROVED BY ME, AND THAT I AM A DULY LICENSED PROFESSIONAL ENGINEER UNDER THE LAWS OF THE STATE OF MARYLAND.
LICENSE #: 19908
EXPIRATION DATE: 01/06/2017

The Maryland-National Capital Park and Planning Commission
Montgomery County Department of Park and Planning
9500 Brunett Avenue
Silver Spring, Maryland 20901
(301) 495-2535

GREAT SENECA CREEK DRAINAGE BASIN (15-003)

GAITHERSBURG (9th) ELECTION DISTRICT

SEWER RELOCATION PLAN

QUINCE ORCHARD MANOR – PUEBLO ROAD
MONTGOMERY COUNTY, MARYLAND

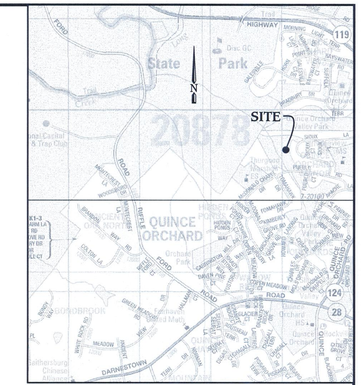

VICINITY MAP

SCALE: 1"=2000'

Map copyright © Kappa Map Group LLC, (800) 829-6277.
Used with permission.
Montgomery County
ADC Map # 5046, Grid K10

DATE	REVISIONS

PERMIT REQUIREMENTS		
SED. CONTROL	IS*	REQ'D
MNCP&PC	IS*	REQ'D
ACCESS	IS*	REQ'D

* BY APPLICANT

TOWN NOTIFICATION

AS BUILT DATA

CONTRACTOR	
CONTRACT MANAGER	
INSPECTOR	
L & G	
DATE STARTED	
DATE COMPLETED	
TYPE PIPE W.	S
TYPE MANHOLES	
DATE FINALED	
FINALED BY	

DRAWING INDEX

Drawing No.	Description
1 thru 2	Plans / Profiles / Details
S.C.1	Sediment Control Details

INFRASTRUCTURE SYSTEMS GROUP

DATE GROUP LEADER

RELOCATION UNIT

DATE UNIT COORDINATOR

DR. GC	CK. JBB	ADEQUATE SURVEY	
WATER	SEWER	OFF-PROPERTY R/W REQUIRED	NO
JOB NO.		ON-PROPERTY R/W REQUIRED	YES
		OTHER UTILITIES	

CONTRACT DA5392A12

50'S		Y	
08RMS6999A		NO.	1
200'S	222NW 12	OF	2

SC/SWM: 21 OF 24

36-188-46.01

Attached Xrefs:

Last Saved 7/29/2016 Last Plotted 8/19/2016 9:59 AM Sheet N:\36188\DWG\46-01_FOR-SWM

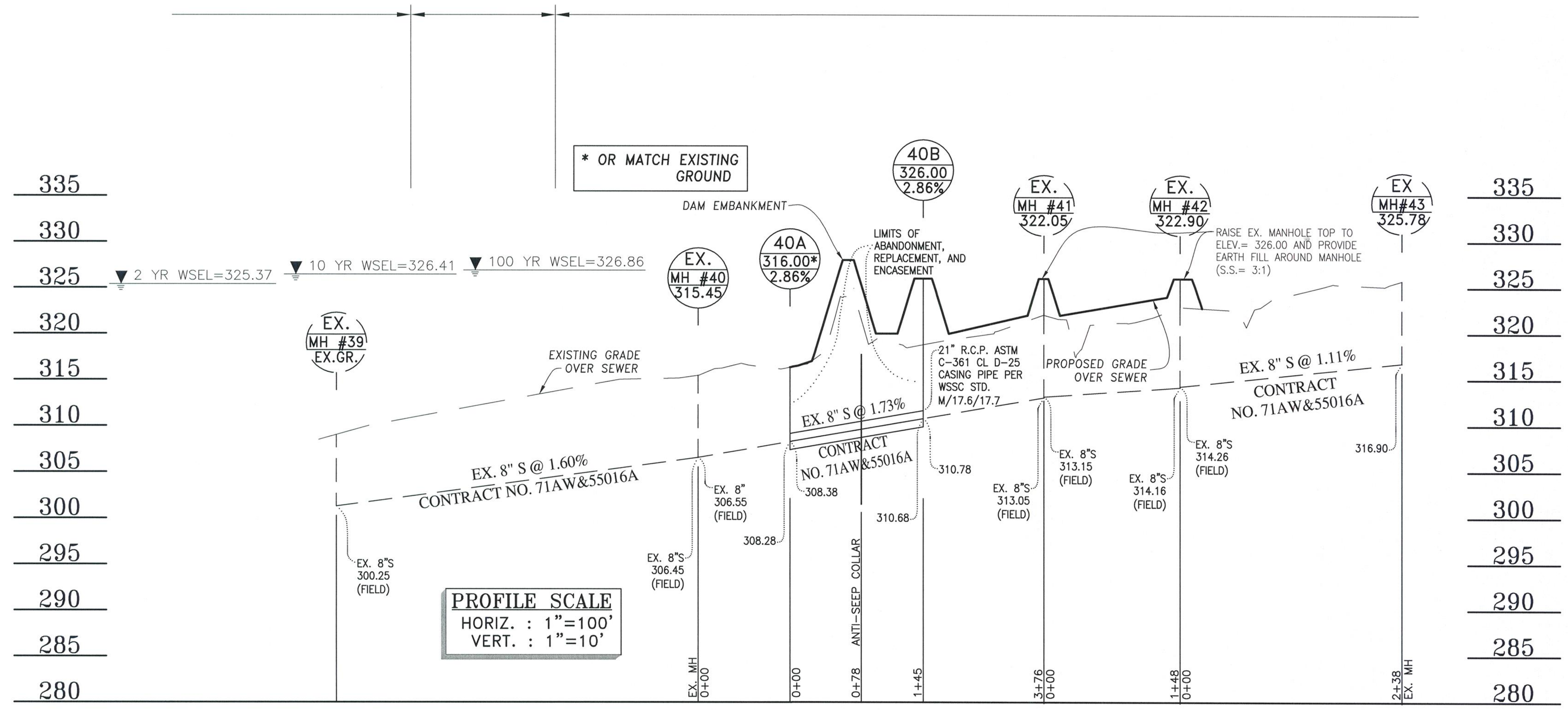

REHABILITATED 8" SEWER

HORIZONTAL GRAPHIC SCALE
SCALE : 1" = 100'

VERTICAL GRAPHIC SCALE
SCALE : 1" = 10'

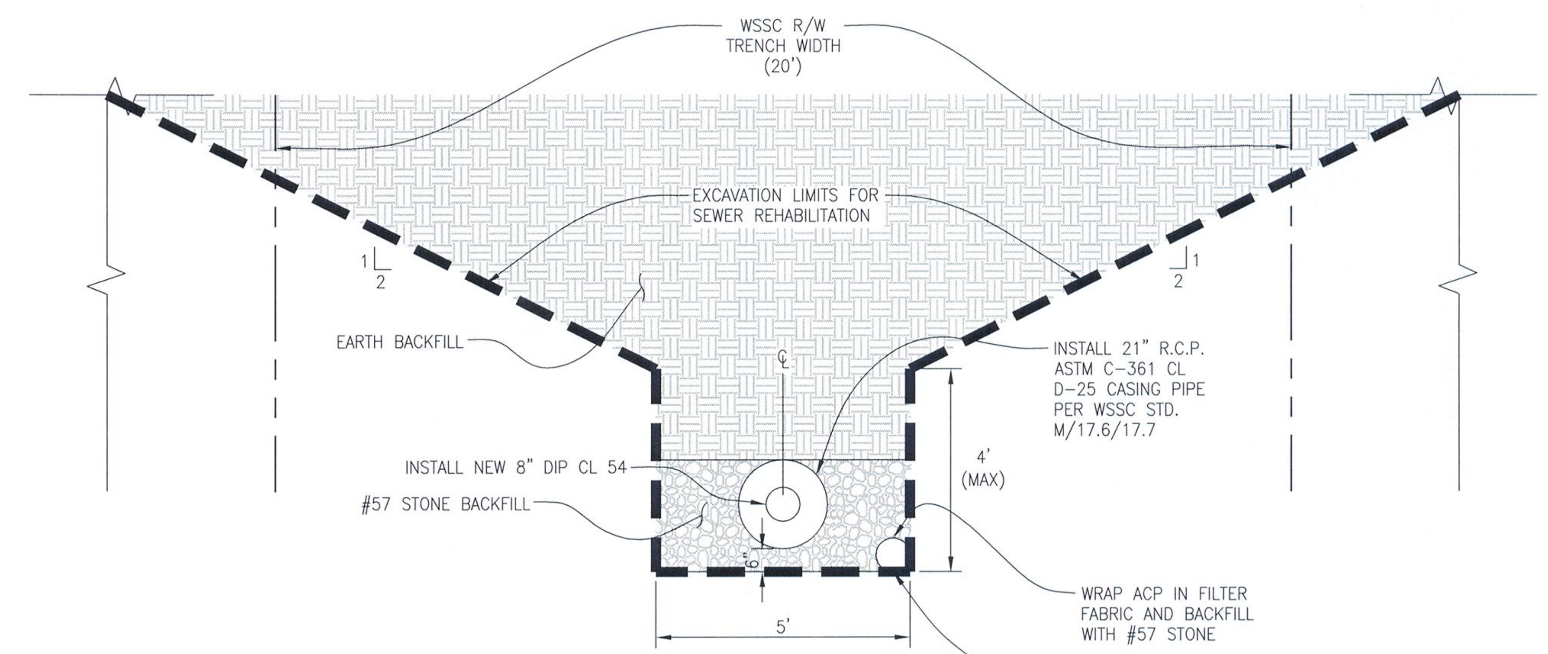

SECTION A-A
SECTION OUTSIDE OF EMBANKMENT
(PIPE STA. 0+00 TO PIPE STA. 0+25 & PIPE STA. 1+00 TO PIPE STA. 1+45)
N.T.S.

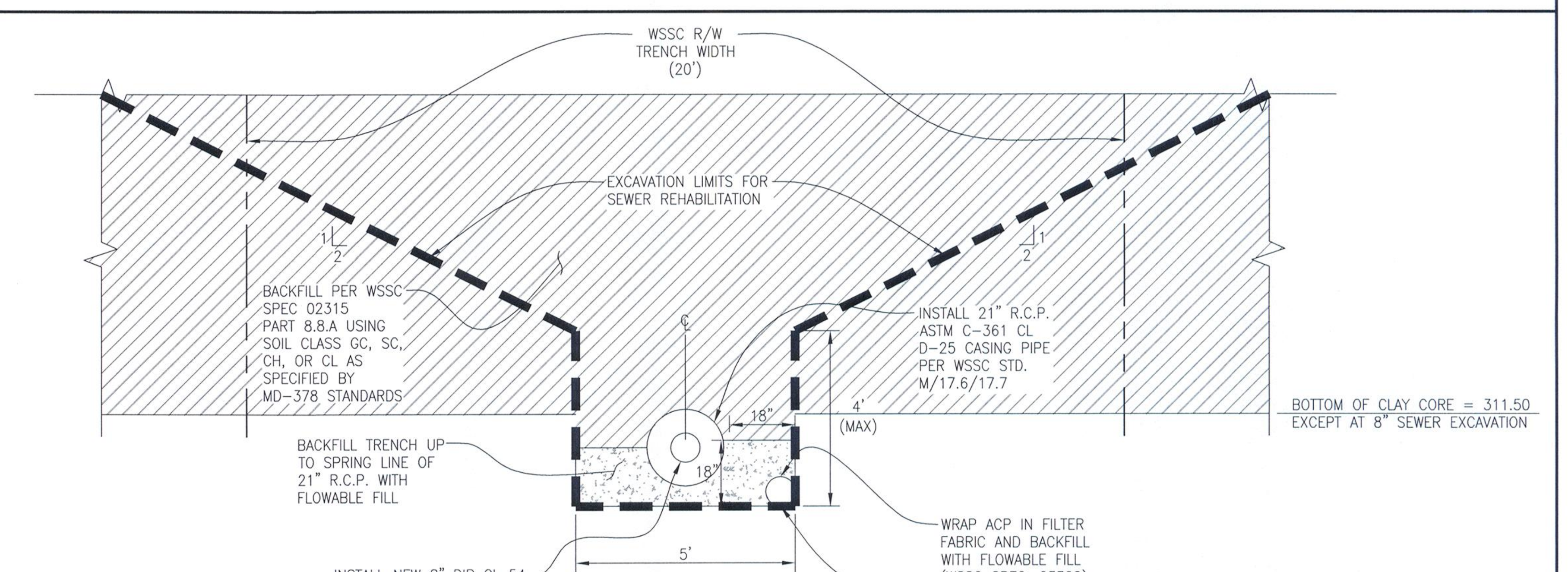

SECTION B-B
SECTION INSIDE OF EMBANKMENT
(PIPE STA. 0+25 TO PIPE STA. 1+00)
N.T.S.

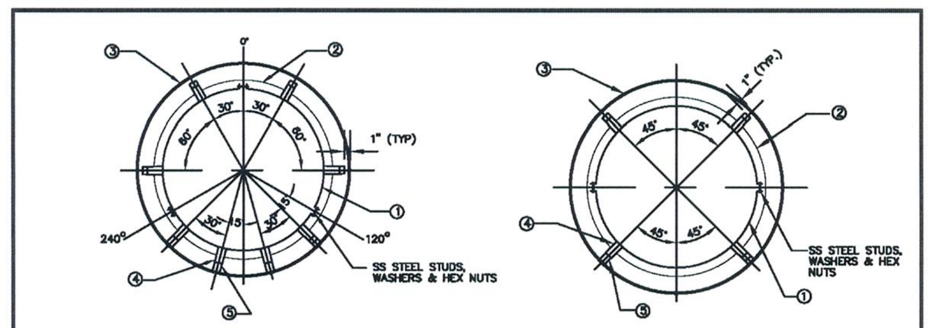

RISER LOCATION FOR 14" THRU 36" DIA. CARRIER PIPE WITH 12" BAND WIDTH

RISER LOCATION FOR 12" DIA. & LESS CARRIER PIPE WITH 8" BAND WIDTH

1. BAND AROUND CARRIER PIPE
2. BELL
3. STEEL OR RCP CASING
4. RISER
5. RUNNER

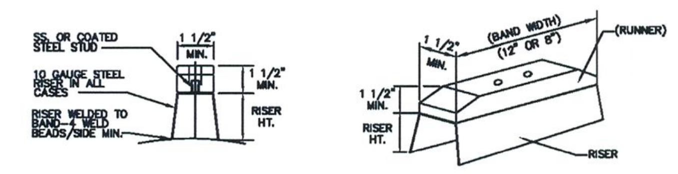

RUNNER AND RISER DETAIL

CASING PIPE DIA.	20" STL. / 21" RCP	22" STL. / 24" RCP	24"	30"	36"	42"	48"	54"
CARRIER PIPE DIA.	8"	10"	12"	16"	20"	24"	30"	36"

NOTES:
1. SEE DETAIL M/17.7 FOR OTHER REQUIREMENTS.
2. THIS DETAIL IS ONLY USED FOR TUNNELS FOR WATER MAINS AND SEWER FORCE MAINS.

WASHINGTON SUBURBAN SANITARY COMMISSION	APPROVED: JULY 1, 2005 Chief Engineer	STANDARD DETAIL CASING AND CASING SPACER DETAILS	M 17.6

M176

GENERAL NOTES:
1. FIELD COAT BURIED PORTION OF VENT PIPE TO 6 INCHES ABOVE FINISHED GRADE.
2. FOR STEEL CASING WELD DETAILS, SEE DETAIL M/17.2.
3. FOR OTHER DETAILS SEE DETAIL M/17.6.

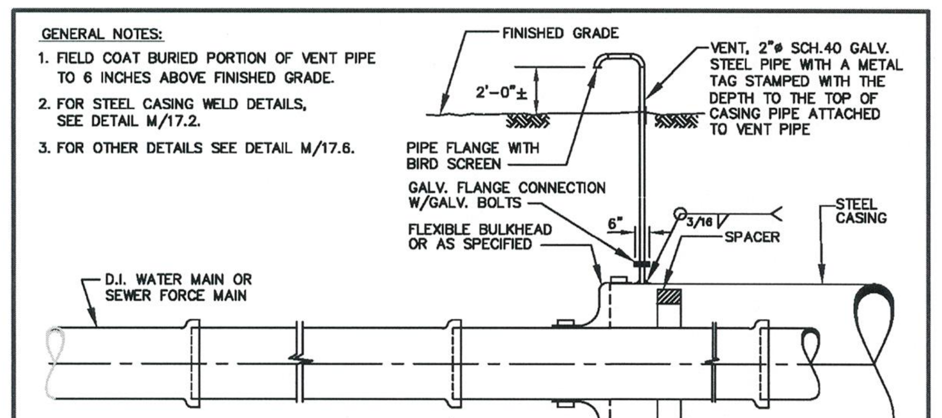

PIPING AT BOTH ENDS OF TUNNEL

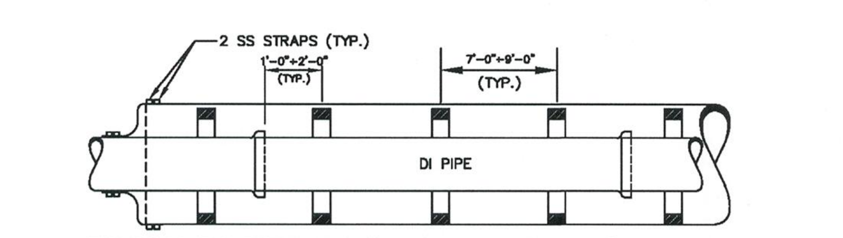

TYPICAL D.I. PIPE AND SPACER LAYOUT INSIDE TUNNEL

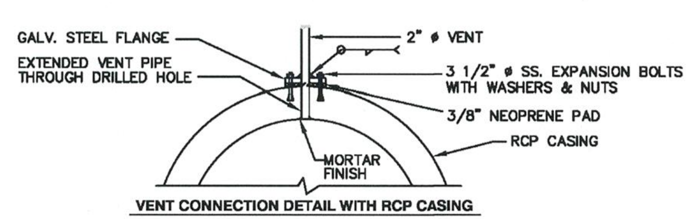

VENT CONNECTION DETAIL WITH RCP CASING

WASHINGTON SUBURBAN SANITARY COMMISSION	APPROVED: JULY 1, 2005 Chief Engineer	STANDARD DETAIL SPACER SPACING AND PIPE LAYOUT AT ENDS OF TUNNEL.	M 17.7

M177

NOTES: TYPICAL MANHOLE STEPS
A. MANHOLE STEPS SHALL BE MINIMUM 12" WIDE AND SPACED 12" WITH ± 1" TOLERANCE, CENTER TO CENTER, IN VERTICAL ALIGNMENT AND ALIGNED WITH BENCH.
B. EMBED STEPS MINIMUM 3" WITH A MINIMUM PROJECTION OF 5".
C. INSTALL BOTTOM STEP MINIMUM 5" AND MAXIMUM 16-1/2" ABOVE BENCH.

NOTES: MANHOLES
1. PROVIDE LIFTING HOLES OR DEVICES FOR ALL PRECAST SECTIONS. HOLES COMPLETELY THRU WALLS SHALL BE PLUGGED W/NEOPRENE OR RUBBER PLUG INSERTS, MORTARED FLUSH ON EACH SIDE OF WALL WITH NON-SHRINK GROUT. HOLES NOT COMPLETELY THRU WALL SHALL BE FILLED FLUSH WITH WALL WITH NON-SHRINK GROUT.
2. UNLESS OTHERWISE NOTED, MAXIMUM DEPTH OF MANHOLE SHALL BE 20'-0". PROVIDE 5'-0" MANHOLE WITH FALL PREVENTION SYSTEM FOR DEPTH OVER 20'.
3. PROVIDE FLEXIBLE GASKET CONNECTOR BETWEEN PIPE AND MANHOLE.
4. MINIMUM HEIGHT OF RISERS = 1'-0". NO MORE THAN ONE 1'-0" RISER IS PERMITTED ON EACH MANHOLE.
5. WHEN MANHOLE DEPTH IS 16'-0" AND GREATER, SEE DETAIL S/3.02 FOR PIPE TO MANHOLE CONNECTION.
6. WHEN PIPE GRADE IS 10% OR GREATER, SEE DETAIL S/3.03 FOR PIPE TO MANHOLE CONNECTION.
7. SEE DETAIL S/3.7 FOR 15" AND LARGER SEWER PIPE TO MANHOLE CONNECTION.
8. CHANNEL LINING MINIMUM 4" FOR BRICK CHANNELS AND MINIMUM 2" FOR PRECAST CONCRETE CHANNELS.
9. MINIMUM SPACING BETWEEN O.D. OF ADJACENT PIPE SHALL BE 9". SEE DETAILS S/6.4. WHEN PIPE DIAMETER OF SMALLER ADJACENT PIPE IS 12" OR GREATER CONTACT MANHOLE MANUFACTURER.

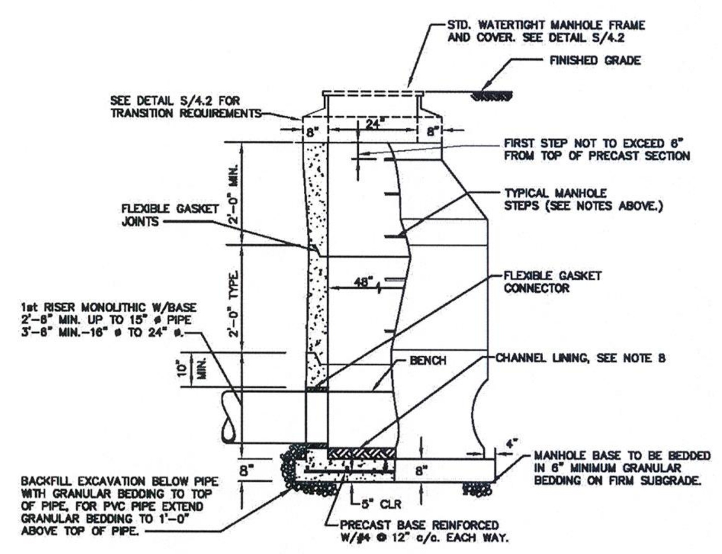

WASHINGTON SUBURBAN SANITARY COMMISSION	APPROVED: JULY 1, 2005 Chief Engineer	STANDARD DETAIL 48" DIAMETER PRECAST CONCRETE MANHOLE	S 1.0

S10

NOTE: ANTI-SEEP COLLAR IS TO BE CONSTRUCTED SEPARATE FROM FLOWABLE FILL CRADLE AND IN TWO (2) POURS. THE TOP SECTION OF THE COLLAR DOES NOT GET POURED UNTIL STREAM DIVERSION IS REMOVED.

NOTE: ANTI-SEEP COLLARS ARE TO BE POURED AT LEAST TWO (2) FEET FROM THE NEAREST PIPE JOINT.

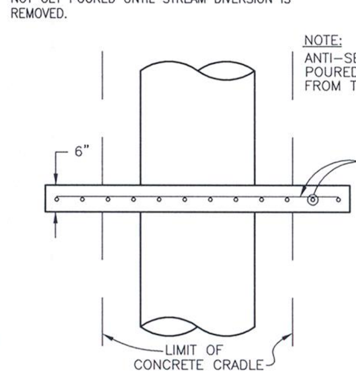

TOP VIEW

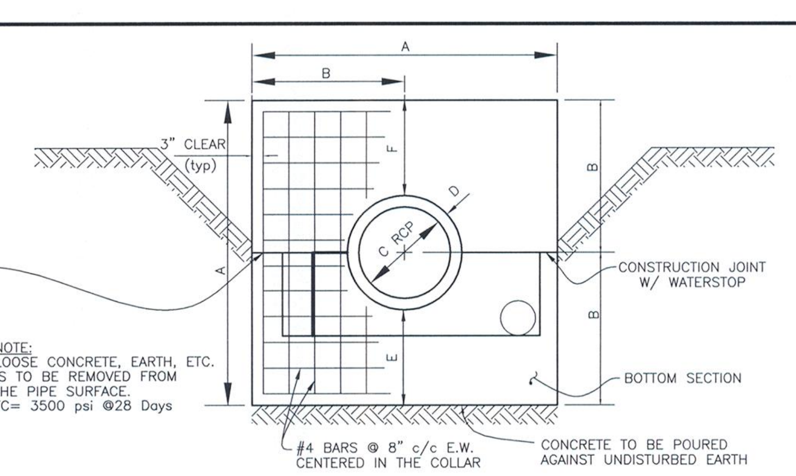

FRONT VIEW

ANTI-SEEP COLLAR DETAIL
(8"S PIPE STA. 0+78)
NOT TO SCALE

	A	B	C	D	E	F
8" SEWER	16'-3"	8'-1 ½"	21"	2 ¾"	7'-¼"	7'-¼"

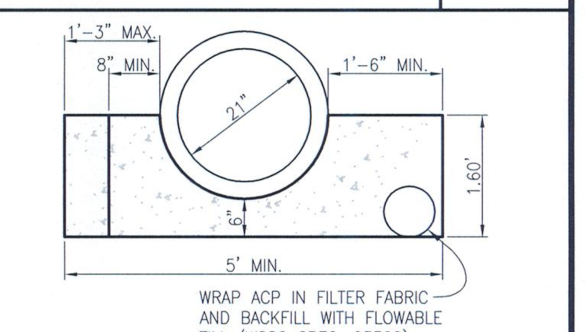

NOTES:
1. CONCRETE TO BE FLOWABLE FILL.
2. CRADLE TO BE CAST AGAINST UNDISTURBED EARTH AND/OR FORMED SIDES.

CONCRETE CRADLE DETAIL
SCALE: 1"=2'

DATE	REVISIONS

INFRASTRUCTURE SYSTEMS GROUP
DATE GROUP LEADER

RELOCATION UNIT
DATE UNIT COORDINATOR

DR. GC	CK. JBB	ADEQUATE SURVEY		
WATER	SEWER	OFF-PROPERTY R/W REQUIRED	NO	
JOB NO.		ON-PROPERTY R/W REQUIRED	YES	
		OTHER UTILITIES		

CONTRACT DA5392A12

STATE OF MARYLAND BRIAN KEITH DAVILA 19908 PROFESSIONAL ENGINEER

PROFESSIONAL CERTIFICATION
I HEREBY CERTIFY THAT THESE DOCUMENTS WERE PREPARED OR APPROVED BY ME, AND THAT I AM A DULY LICENSED PROFESSIONAL ENGINEER UNDER THE LAWS OF THE STATE OF MARYLAND.
LICENSE #: 19908
EXPIRATION DATE: 01/06/2017

The Maryland-National Capital Park and Planning Commission
Montgomery County Department of Park and Planning
9500 Brunett Avenue
Silver Spring, Maryland 20901
(301) 495-2535

GREAT SENECA CREEK DRAINAGE BASIN (15-003)

WASHINGTON SUBURBAN SANITARY COMMISSION

Charles P. Johnson & Associates, Inc.
Civil and Environmental Engineers • Planners • Landscape Architects • Surveyors
1751 Elton Rd., Ste. 300 Silver Spring, MD 20903 301.434.7000 Fax: 301.434.9394
www.cpja.com • Gaithersburg, MD • Frederick, MD • Stevensville, MD • Fairfax, VA

GAITHERSBURG (9th) ELECTION DISTRICT
SEWER RELOCATION PLAN
QUINCE ORCHARD MANOR – PUEBLO ROAD
MONTGOMERY COUNTY, MARYLAND

50'S	Y
08RMS6999A	NO. 2
200'S 222NW 12	OF 2

SC/SWM: 22 OF 24

36-188-46.01

Attached Xrefs:

Last Saved 7/29/2016 Last Plotted 8/19/2016 9:59 AM Sheet N:\36188\DWG\46-01_FOR-SWM

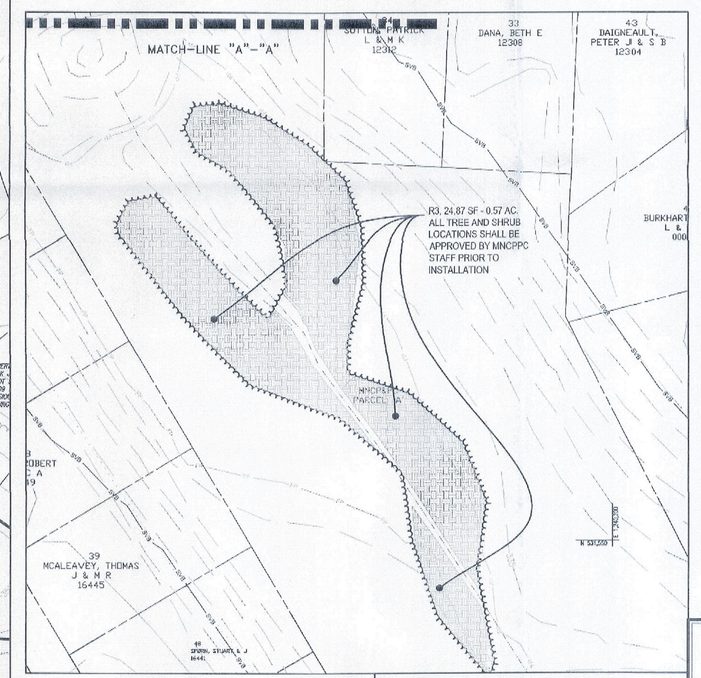

THE MARYLAND-NATIONAL CAPITAL PARK AND PLANNING COMMISSION

Final Forest Conservation Plan
APPROVAL

Plan No. SC 2014-020

Signature — Date 12/3/2015

RECEIVED
M-NCPPC
DEC -2 2015
MONTGOMERY COUNTY PLANNING DEPARTMENT

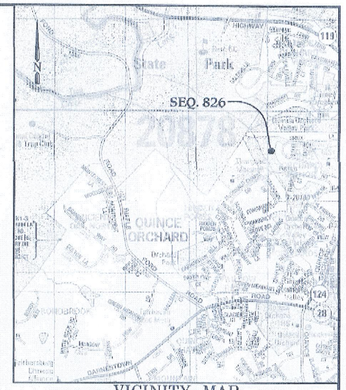

VICINITY MAP

SCALE: 1"=2000'

Map copyright © Kappa Map Group LLC, (800) 829-6277. Used with permission.

LEGEND

SIGNIFICANT TREES TO REMAIN	1
SIGNIFICANT TREES TO BE REMOVED	3
PROPOSED REPLACEMENT SPECIMEN TREE 3" Cal.	+
EXISTING TREELINE	
PROPOSED TREE LINE	
DAM EMBANKMENT (NO PLANTING ZONE)	
ROOT PRUNING	
SILT FENCE	SF
SUPER SILT FENCE	SSF
TREE PROTECTION FENCE	XX
EXISTING 100 YEAR FP	
100 YEAR FP BRL	
EXISTING STREAM	
STREAM BUFFER	SVB
SOIL DIVIDE	160
EXISTING MAJOR CONTOURS	20'
EXISTING MINOR CONTOURS	
PROPOSED CONTOURS	
LIMIT OF DISTURBANCE	LOD
EXISTING WETLANDS	W
EXISTING 25' WETLANDS BUFFER	WB
FOREST STAND	FC
DAM EMBANKMENT AREA AND ACCESS ROAD (CLEAR OF WOODY VEGETATION)	
REFORESTATION AREA	
SANITARY SEWER EASEMENT LIMITS	
FOREST CLEARING AREA	

UPDATES/REVISIONS :
1. Per Planning Review comments dated 07/24/2014.
2. Per Planning Review comments dated 12/03/2014.

MISS UTILITY

THE CONTRACTOR SHALL CALL "MISS UTILITY" AT 1-800-257-7777 48 HOURS PRIOR TO THE START OF WORK. THE CONTRACTOR IS RESPONSIBLE FOR ENSURING THAT ALL UNDERGROUND UTILITIES IN THE AREA OF PROPOSED WORK ARE LOCATED PRIOR O COMMENCING CONSTRUCTION WORK. THE CONTRACTOR IS RESPONSIBLE FOR COMPLIANCE WITH THE REQUIREMENTS OF CHAPTER 36A OF THE MONTGOMERY COUNTY CODE.

THE CONTRACTOR IS ALSO RESPONSIBLE FOR LOCATING ALL PRIVATE UTILITIES (NOT LOCATED BY MISS UTILITY) WITHIN M-NCPPC PROPERTY AT THEIR EXPENSE. ALL UTILITIES SHOWN ON THE PLANS ARE PROVIDED FOR INFORMATION ONLY AND SHALL BE CONSIDERED APPROXIMATE. M-NCPPC SHALL NOT BE RESPONSIBLE FOR LOCATING UNDERGROUND UTILITIES. ANY UTILTIES OR OTHER UNDERGROUND FACILITIES DAMAGED DURING CONSTRUCTION SHALL BE REPAIRED/REPLACED AT THE CONTRACTOR'S SOLE EXPENSE.

SHEET INDEX	
SHEET NO.	SHEET TITLE
1	FOREST CONSERVATION PLAN VIEW
2	FOREST CONSERVATION DETAILS

TOTAL DISTURBED AREA=1.28 Ac.

GRAPHIC SCALE
50 0 25 50 100
SCALE: 1" = 50'

PROFESSIONAL CERTIFICATION

I hereby certify that this plan is prepared in accordance with Maryland Forest Conservation Regulations.

STATE OF MARYLAND — ERIC J. STURM — No. 755 — REGISTERED LANDSCAPE ARCHITECT

12/1/2015
DATE

ERIC J. STURM
REGISTERED LANDSCAPE ARCHITECT # MD 755

DEVELOPER'S CERTIFICATE

THE UNDERSIGNED AGREES TO EXECUTE ALL THE FEATURES AND REQUIREMENTS OF THIS SITE PLAN IN ACCORDANCE WITH THE AGREEMENT BETWEEN MONTGOMERY COUNTY PLANNING BOARD AND THE UNDERSIGNED.

DATE: 12/01/15 BY: Gene Gopenko

MONTGOMERY COUNTY DEPARTMENT OF ENVIRONMENTAL PROTECTION
DEVELOPER'S NAME/COMPANY NAME/PARTNERSHIP NAME/NAME OF CONTRACT PURCHASER

GENE GOPENKO
PRINTED NAME

WSSC GRID: 222 NW 12, TAX MAP: ES53
FOREST CONSERVATION PLAN VIEW
SEQUENCE NO. 826

PUEBLO ROAD

GAITHERSBURG (9th) ELECTION DISTRICT
MONTGOMERY COUNTY, MARYLAND

CPJ Associates
Charles P. Johnson & Associates, Inc.
Civil and Environmental Engineers • Planners • Landscape Architects • Surveyors
1751 Elton Rd., Ste. 300 Silver Spring, MD 20903 301.434.7000 FAX: 301.434.9394
www.cpja.com • Gaithersburg, MD • Frederick, MD • Stevensville, MD • Fairfax, VA

CLIENT: Montgomery County
Department of Environmental Protection
255 Rockville Pike, Suite 120
Rockville, Maryland 20850-4166
Phone: (240) 777-7725
Contact: Mr. Gene Gopenko

PRELIMINARY PLAN NO.	N/A
SITE PLAN NO.	N/A
DESIGN	HB/SC
DRAFT	ADG/GC
DATE	MAY, 2014
SCALE	1"=50'
SHEET	1 OF 2
SC/SWM:	23 OF 24
FILE NO:	36-188-2228

COPYRIGHT © LATEST DATE HEREON
CHARLES P. JOHNSON & ASSOCIATES, INC.
ALL RIGHTS RESERVED. UNAUTHORIZED USE OR REPRODUCTION IS PROHIBITED.

Attached Xrefs: TS24-36/GIS Topo-565/2-02a1-9/08-826-01/08-01

Sequence of Events for Property Owners Required to Comply With Forest Conservation and/or Tree-Save Plans

Pre-Construction

1. An on-site pre-construction meeting is required after the limits of disturbance have been staked and flagged, but before any clearing or grading begins. The property owner should contact the Montgomery County Planning Department inspection staff before construction to verify the limits of disturbance and discuss tree protection and tree care measures. The developer's representative, construction superintendent, ISA certified arborist or Maryland-licensed tree expert that will implement the tree protection measures, forest conservation inspector, and Department of Permitting Services (DPS) sediment control inspector should attend this pre-construction meeting.
2. No clearing or grading shall begin before stress-reduction measures have been implemented. Appropriate measures may include, but are not limited to:
   a. Root pruning
   b. Crown reduction or pruning
   c. Watering
   d. Fertilizing
   e. Vertical mulching
   f. Root aeration matting

   Measures not specified on the forest conservation plan may be required as determined by the forest conservation inspector in coordination with the arborist.
3. A Maryland-licensed tree expert or an International Society of Arboriculture-certified arborist must perform all stress reduction measures. Documentation of stress reduction measures must be either observed by the forest conservation inspector or sent to the inspector at 8787 Georgia Avenue, Silver Spring, MD 20910. The forest conservation inspector will determine the exact method to convey the stress reductions measures during the pre-construction meeting.
4. Temporary tree protection devices shall be installed per the Forest Conservation Plan/Tree Save Plan and prior to any construction activities. Tree protection fencing locations should be staked prior to the pre-construction meeting. The forest conservation inspector, in coordination with the DPS sediment control inspector, may make field adjustments to increase the survivability of trees and forest shown as saved on the approved plan. Temporary tree protect devices may include:
   a. Chain link fence (four feet high)
   b. Super silt fence with wire strung between support poles (minimum 4 feet high) with high visibility flagging.
   c. 14 gauge 2 inch x 4 inch welded wire fencing supported by steel T-bar posts (minimum 4 feet high) with high visibility flagging.
5. Temporary protection devices shall be maintained and installed by the contractor for the duration of construction project and must not be altered without prior approval from the forest conservation inspector. No equipment, trucks, materials, or debris may be stored within the tree protection fence areas during the entire construction project. No vehicle or equipment access to the fenced area will be permitted. Tree protection shall not be removed without prior approval of forest conservation inspector.
6. Forest retention area signs shall be installed as required by the forest conservation inspector, or as shown on the approved plan.
7. Long-term protection devices will be installed per the Forest Conservation Plan/Tree Save Plan and attached details. Installation will occur at the appropriate time during the construction project. Refer to the plan drawing for long-term protection measures to be installed.

During Construction

8. Periodic inspections by the forest conservation inspector will occur during the construction project. Corrections and repairs to all tree protection devices, as determined by the forest conservation inspector, must be made within the timeframe established by the inspector.

Post-Construction

9. After construction is completed, an inspection shall be requested. Corrective measures may include:
   a. Removal and replacement of dead and dying trees
   b. Pruning of dead or declining limbs
   c. Soil aeration
   d. Fertilization
   e. Watering
   f. Wound repair
   g. Clean up of retention areas
10. After inspection and completion of corrective measures have been undertaken, all temporary protection devices shall be removed from the site. Removal of tree protection devices that also operate for erosion and sediment control must be coordinated with both the Department of Permitting Services and the forest conservation inspector. No additional grading, sodding, or burial may take place after the tree protection fencing is removed.

INSPECTIONS

All field inspections must be requested by the applicant. Inspections must be conducted as follows:

Tree Save Plans and Forest Conservation Plans without Planting Requirements

1. After the limits of disturbance have been staked and flagged, but before any clearing or grading begins
2. After necessary stress reduction measures have been completed and protection measures have been installed, but before any clearing and grading begin.
3. After completion of all construction activities, but before removal of tree protection fencing, to determine the level of compliance with the provision of the forest conservation.

Additional Requirements for Plans with Planting Requirements

4. Before the start of any required reforestation and afforestation planting
5. After the required reforestation and afforestation planting has been completed to verify that the planting is acceptable and prior to the start the maintenance period.
6. At the end of the maintenance period to determine the level of compliance with the provisions of the planting plan, and if appropriate, release of the performance bond.

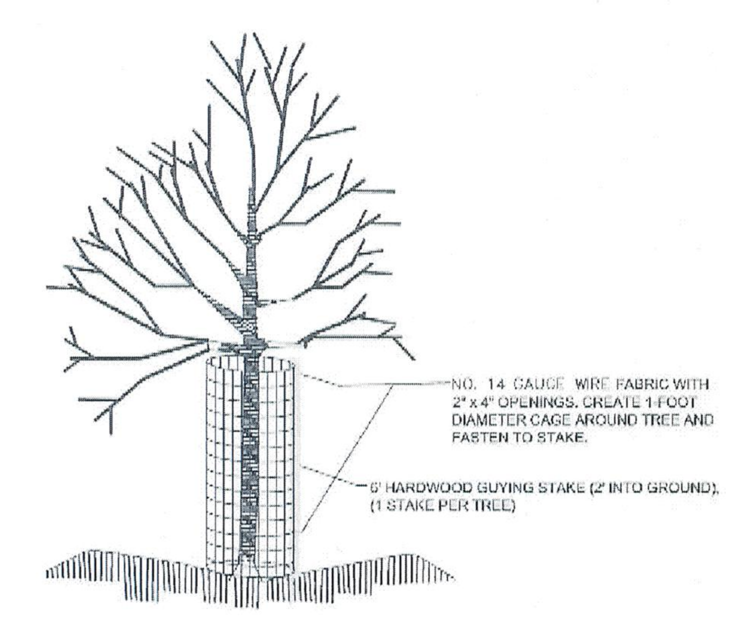

NOTES:
1. HEIGHT OF CAGE SHALL BE 4-FEET (MIN.)
2. CAGE SHALL BE FASTENED TO STAKE WITH TWO (MIN.) 11-INCH RELEASABLE CABLE TIES (ONE AT TOP AND ONE 6" (MIN.) ABOVE THE GROUND.
3. DO NOT DAMAGE TREE DURING INSTALLATION.
4. DEER BARK PROTECTORS (ITEM #bg48, BY A.M. LEONARD, OR EQUAL) MAY BE SUBSTITUTED FOR TREES GREATER THAN 3/4" CALIPER. ALL OTHER SUBSTITUTIONS MUST BE APPROVED BY FOREST ECOLOGIST.
5. CAGES TO BE REMOVED AT DIRECTION OF FOREST ECOLOGIST.
6. ENSURE CAGE IS SECURE TO GROUND TO PREVENT UPLIFT BY DEER.

DEER PROTECTION FENCE CAGE

SIGNIFICANT TREE TABLE

Number	Latin Name	Common Name	Size	Condition	# of Multiple Leaders (# of Leaders > 30")	Specimen Tree	Variance % CRZ in LOD	Action
1	Acer rubrum	Red Maple	27"	poor				
2	Acer rubrum	Red Maple	29"	fair				
3	Liriodendren tulipifera	Yellow Poplar	29"	fair				
4	Liriodendren tulipifera	Yellow Poplar	30"	Poor/dead		yes	041%	TBR
5	Liriodendren tulipifera	Yellow Poplar	29"	good				
6	Liriodendren tulipifera	Yellow Poplar	36"	fair	2(0)	yes	15%	RP
7	Liriodendren tulipifera	Yellow Poplar	42"	good	2(0)	yes		
8	Liriodendren tulipifera	Yellow Poplar	59"	good	3(0)	yes		
9	Liriodendren tulipifera	Yellow Poplar	45"	good	2(0)	yes	33%	TBR
10	Liriodendren tulipifera	Yellow Poplar	28"	good				
11	Quercus rubra	Red Oak	29"	fair				
12	Liriodendren tulipifera	Yellow Poplar	25"	good	2(1)			
13	Liriodendren tulipifera	Yellow Poplar	27"	good	2(1)			
14	Liriodendren tulipifera	Yellow Poplar	45"	fair	2(0)	yes		
15	Liriodendren tulipifera	Yellow Poplar	29"	good				
16	Liriodendren tulipifera	Yellow Poplar	42"	good	2(0)	yes		
17	Liriodendren tulipifera	Yellow Poplar	29"	good				
18	Liriodendren tulipifera	Yellow Poplar	27"	good				
19	Liriodendren tulipifera	Yellow Poplar	34"	poor		yes		
20	Liriodendren tulipifera	Yellow Poplar	28"	good				
21	Liriodendren tulipifera	Yellow Poplar	32"	good	2(0)			
22	Liriodendren tulipifera	Yellow Poplar	42"	fair		yes	26%	RP
23	Liriodendren tulipifera	Yellow Poplar	29"	good				
24	Liriodendren tulipifera	Yellow Poplar	42"	good		yes		
25	Liriodendren tulipifera	Yellow Poplar	39"	good		yes	16%	RP
26	Liriodendren tulipifera	Yellow Poplar	29"	good				
27	Liriodendren tulipifera	Yellow Poplar	48"	fair	2(0)	yes	11%	RP
28	Liriodendren tulipifera	Yellow Poplar	37"	good		yes	47%	TBR
29	Liriodendren tulipifera	Yellow Poplar	36"	fair		yes	22%	TBR
30	Liriodendren tulipifera	Yellow Poplar	29"	good				
31	Liriodendren tulipifera	Yellow Poplar	32"	good		yes		
32	Liriodendren tulipifera	Yellow Poplar	30"	good		yes		
33	Liriodendren tulipifera	Yellow Poplar	32"	poor		yes		
34	Liriodendren tulipifera	Yellow Poplar	25"	good				
35	Liriodendren tulipifera	Yellow Poplar	26"	poor	2(1)			
36	Liriodendren tulipifera	Yellow Poplar	30"	fair		yes	17%	RP
37	Juglins nigra	Black Walnut	24"	fair				
38	Platinus occidentalis	Sycamore	33"	poor		yes		
39	Liriodendren tulipifera	Yellow Poplar	27"	fair				
40	Liriodendren tulipifera	Yellow Poplar	31"	good		yes		
41	Liriodendren tulipifera	Yellow Poplar	30"	good		yes		
42	Liriodendren tulipifera	Yellow Poplar	54"	good		yes		
43	Liriodendren tulipifera	Yellow Poplar	35"	good	2(0)	yes		
44	Liriodendren tulipifera	Yellow Poplar	33"	good		yes		
45	Liriodendren tulipifera	Yellow Poplar	45"	fair	2(1)	yes		
46	Liriodendren tulipifera	Yellow Poplar	56"	poor		yes		
47	Juglins nigra	Black Walnut	26"	good				
48	Liriodendren tulipifera	Yellow Poplar	35"	fair	2(1)	yes		
49	Liriodendren tulipifera	Yellow Poplar	30"	fair	2(1)			
50	Liriodendren tulipifera	Yellow Poplar	27"	good				
51A	Liriodendren tulipifera	Yellow Poplar	26"	good				
51B	Liriodendren tulipifera	Yellow Poplar	27"	good				
52	Liriodendren tulipifera	Yellow Poplar	27"	fair				
53	Liriodendren tulipifera	Yellow Poplar	30"	good		yes		
54	Acer rubrum	Red Maple	27"	good				
55	Juglins nigra	Black Walnut	26"	fair				
56	Liriodendren tulipifera	Yellow Poplar	39"	fair		yes		
57	Liriodendren tulipifera	Yellow Poplar	45"	good		yes		
58	Liriodendren tulipifera	Yellow Poplar	34"	poor		yes		
59	Platinus occidentalis	Sycamore	26"	fair				
60	Acer rubrum	Red Maple	26"	poor				

*Stress Reduction Measure (Trees labeled as 'NA' have critical root zones completely outside of limit of disturbance)

(RP) - Root Pruning to be performed on the exterior of the limit of disturbance, tree protection fence and the critical root zone. It is to be accomplished by a vibratory plow with a cerrated cutting edge or a root cutter with a 36" wheel to a depth of 24". Chain-driven trenchers are not acceptable.

(TBR) - To be removed.

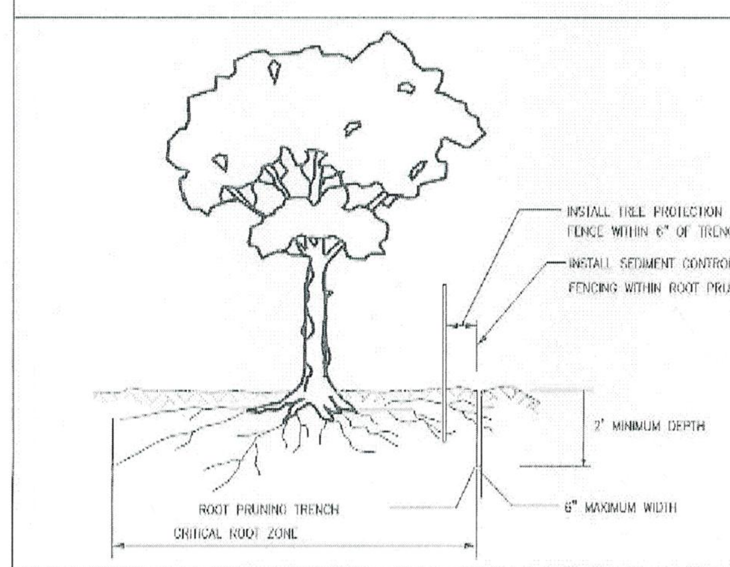

NOTES:
1. RETENTION AREAS TO BE ESTABLISHED AS PART OF THE FOREST CONSERVATION PLAN REVIEW PROCESS.
2. BOUNDARIES OF RETENTION AREAS TO BE STAKED, FLAGGED AND/OR FENCED PRIOR TO TRENCHING.
3. EXACT LOCATION OF TRENCH SHOULD BE IDENTIFIED IN FIELD WITH M-NCPPC.
4. TRENCH SHOULD BE IMMEDIATELY BACKFILLED WITH SOIL REMOVED OR ORGANIC SOIL.
5. ROOTS SHOULD BE CLEANLY CUT USING VIBRATORY KNIFE OR OTHER ACCEPTABLE EQUIPMENT.

ROOT PRUNING

On-Site and off Site Re-Forestation * Planting Schedule - 0.72 Ac. Total (R1+R2+R3-see plan) *

Planting Type	Common Name	Scientific Name	Size	R1	R2	R3		Total	Spacing
				Replacement Area / Quantity					
Trees	American Sycamore	Plantanus occidentalis	1.5-2" caliper	1	1	8		10	20' c/c
	Swamp White Oak	Quercus bicolor	1.5-2" caliper	3	1	17		21	20' c/c
	Red Maple	Acer rubrum	1.5-2" caliper	1	3	13		17	20' c/c
	Tulip Poplar	Liriodendrum tulipifera	1.5-2" caliper	2	1	10		13	20' c/c
	River Birch	Betula nigra	1.5-2" caliper	1	1	7		9	20' c/c
	Total			8	7	55		70	
Shrubs	Spicebush	Lindera benzoin	5 gallon	1	1	7		9	Note 5
	Silky Dogwood	Cornus amomum	5 gallon	1	0	5		6	Note 5
	Buttonbush	Cephalanthus occidentalis	5 gallon	1	0	7		8	Note 5
	Total			3	1	19		23	

Notes:
1. *For species selection purposes, Sequence No. 826 is identified as a Stormwater Management Pond Restoration site.*
2. *If any of the plants listed are unavailable, substitutions must be approved by the M-NCPPC Forest Ecologist.*
3. *Plant locations are to be in accordance with the M-NCPPC-approved planting plan.*
4. *On-Site planting accounts for 0.15 Acres of the required .70 acres of reforestation. Off-site reforestation totaling 0.57 Acres is accounted for at sequence #565 just to the south of Pueblo Road and sequence #826 (see sheet 1).*
5. *Shrubs are to be distributed evenly and among the trees at a rate of 33 per acre. 0.7 acres yields 23.1 (say 23) shrubs total required)*

* NOTE: Reforestation Planting formula used is 100 - 1.5-2" caliper trees per acre (with 0.7 acres required = 70 trees, spaced at 20' o.c.. All trees planted require deer protection (see detail this sheet)

Specimen Tree Replacement Schedule**

Planting Type	Common Name	Scientific Name	Size	Quantity
Trees	American Sycamore	Plantanus occidentalis	3" caliper	3
	Swamp White Oak	Quercus bicolor	3" caliper	4
	Total			7

** Two of the 4 specimen trees to be removed are outside of the forest to be removed area (LOD.) Based on these two trees (#9 - 45" cal. and #29 - 36" cal.) there is a combined cal./inches lost of 81" which yields 81 / 4 = 21 cal. inches required. Using 3" caliper trees, this yields a quantity of seven (7) trees required/proposed for mitigation, to be placed as shown on the proposed mitigation areas shown on sheet 1 of 2.

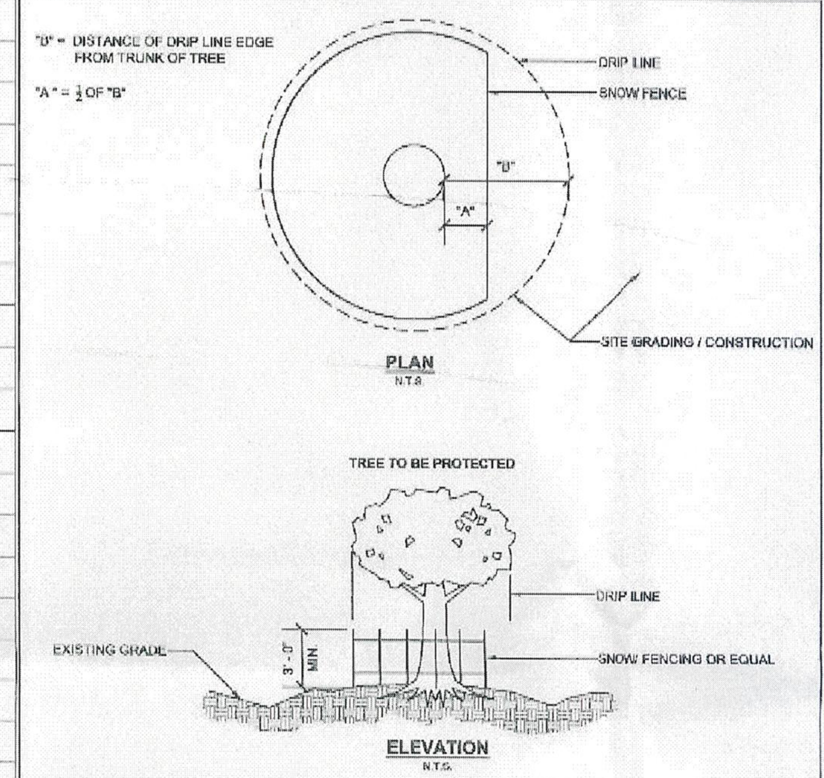

NOTE:
1. FENCING SHALL BE PLACED AT THE DRIP LINE OF TREES TO BE PROTECTED DURING CONSTRUCTION EXCEPT ON THE SIDE OF DISTURBANCE FENCING SHALL NOT BE PLACED CLOSER TO THE TREE THAN 1/2 THE TOTAL DISTANCE FROM THE TREE TO THE LIMITS OF THE TREE'S DRIP LINE. THIS SPACE IS TO ACCOMMODATE GRADING ONLY AND NOT TO ALLOW ADDITIONAL WORKING SPACE.
2. GROUP OF TREES MAY BE FENCED AS ONE.

TREE PROTECTION DETAIL — Detail No. 731 — SEPT. 2008
The Maryland-National Capital Park and Planning Commission
Montgomery County Department of Parks

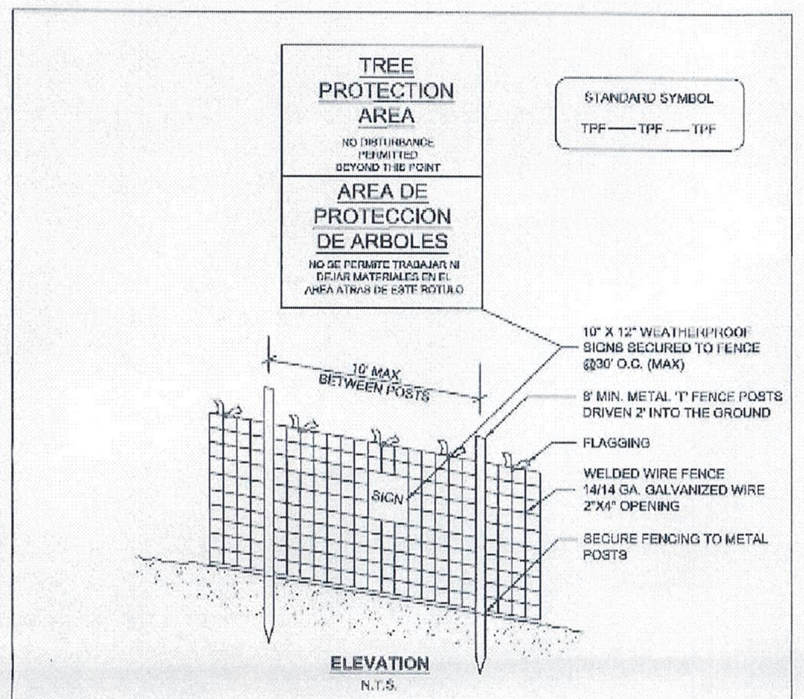

NOTES:
1. PRACTICE MAY BE COMBINED WITH SEDIMENT CONTROL FENCING.
2. LOCATION AND LIMITS OF FENCING SHALL BE COORDINATED IN FIELD WITH ARBORIST.
3. BOUNDARIES OF PROTECTION AREA SHOULD BE STAKED PRIOR TO INSTALLING PROTECTIVE DEVICE.
4. ROOT DAMAGE SHOULD BE AVOIDED.
5. PROTECTIVE SIGNAGE IS REQUIRED.
6. FENCING SHALL BE MAINTAINED THROUGHOUT CONSTRUCTION.

TREE PROTECTION FENCE — Detail No. — JUNE 2007
The Maryland-National Capital Park and Planning Commission
Montgomery County Department of Parks

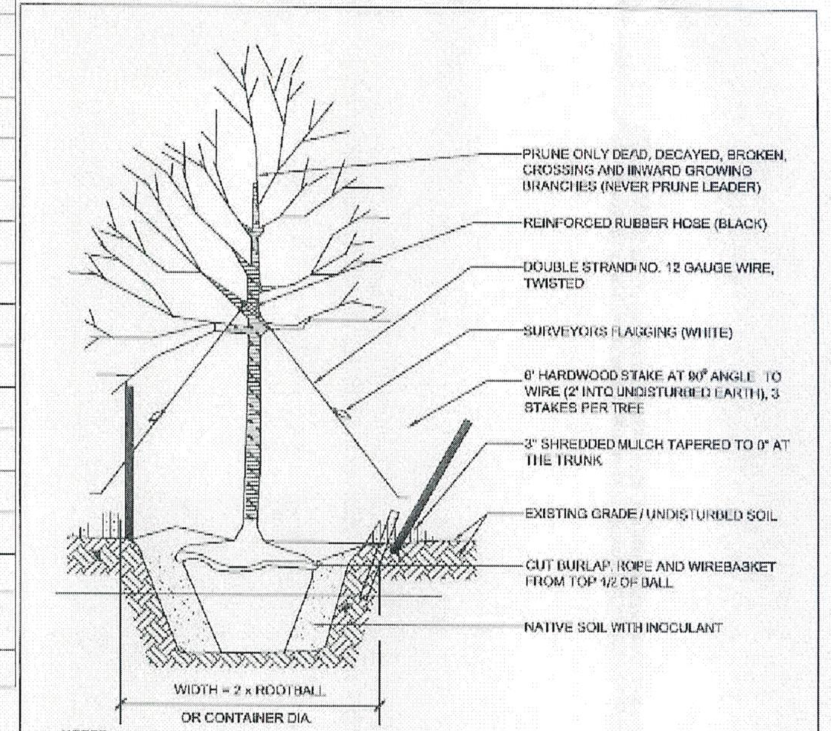

NOTES:
1. STAKES AND WIRES MUST BE REMOVED NO LATER THAN 12 MONTHS AFTER PLANTING.
2. PLANTING HOLE SHALL BE DUG BY A BACKHOE OR OTHER MACHINE AND FINISHED BY HAND.
3. IF SURROUNDING SOIL IS COMPACTED AS DETERMINED BY M-NCPPC PLANNING DEPT INSPECTOR OR PARKS DEPT FOREST ECOLOGIST, AN AREA UP TO 5 TIMES THE DIA. OF THE ROOT MASS SHALL BE EXCAVATED OR ROTOTILLED TO A 1' DEPTH AND THE SOIL SHALL BE AMENDED.
4. DO NOT DAMAGE OR CUT LEADER.
5. ROOT FLAIR EVEN WITH LEVEL OF UNDISTURBED GROUND.

DECIDUOUS PLANTS - (2 ½ " Caliper or Larger) — Detail No. — DECEMBER 2007
The Maryland-National Capital Park and Planning Commission
Montgomery County Department of Parks

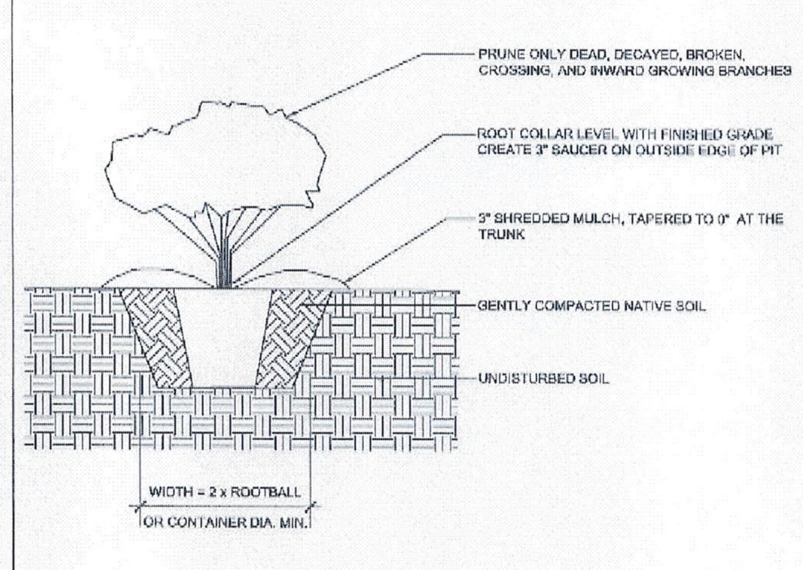

NOTES:
1. REMOVE ALL POTS AND WIRE AND CUT CONTAINER CLEANLY WAY FROM ROOTS.
2. REMOVE BURLAP FROM TOP HALF OF ROOT BALL.
3. CONTAINER PLANTINGS MAKE 4 TO 5 VERTICAL CUTS TO THE ROOT BALL BEFORE SETTING IN PLACE.
4. PRUNE ALL DAMAGED, DISEASED, OR WEAK LIMBS AND ROOTS.
5. CLEANLY PRUNE ALL DAMAGED ROOT ENDS TEASE ROOTS OF CONTAINER GROWN STOCK.
6. DO NOT ALLOW ROOTS TO DRY OUT DURING INSTALLLATION PROCESS.
7. DEEP WATER AFTER PLANTING.

LANDSCAPE SHRUB — N.T.S. — Detail No. — OCTOBER 2007
The Maryland-National Capital Park and Planning Commission
Montgomery County Department of Parks

MISS UTILITY

The Contractor shall call "Miss Utility" at 1-800-257-7777, 48 hours prior to the start of work. The Contractor is responsible for ensuring that all underground utilities in the area of proposed work are located prior to commencing construction work. The Contractor is responsible for compliance with requirements of Chapter 36A of the Montgomery County Code.

The contractor is also responsible for locating all private utilities (not located by Miss Utility) within M-NCPPC property at their expense. All utilities shown on the plans are provided for information only and shall be considered approximate. M-NCPPC shall not be responsible for locating underground utilities. Any utilities or other underground facilities damaged during construction shall be repaired/replaced at the Contractor's sole expense.

FOREST CONSERVATION TABLE

Tract Information		
Acreage of Tract	1.28	Acres
Acreage of Tract remaining as part of Agricultural Use	0.00	Acres
Acreage of Road and Utility R/W not improved on	0.73	Acres
Acreage of total existing forest	0.96	Acres
Acreage of total forest retention	0.00	Acres
Acreage of total forest cleared	0.96	Acres
Land Use Category		Institutional
Conservation Threshold	20	%
Afforestation Threshold	15	%
Wetlands		
Acreage of Forest Retained	0.00	Acres
Acreage of Forest Cleared	0.11	Acres
Acreage of Forest Planted	0.00	Acres
100 Year Floodplain		
Acreage of Forest Retained	0.00	Acres
Acreage of Forest Cleared	0.96	Acres
Acreage of Forest Planted	0.70	Acres
Stream Buffers		
Acreage of Forest Retained	0.00	Acres
Acreage of Forest Cleared	0.96	Acres
Acreage of Forest Planted	0.70	Acres
Priority Areas		
Acreage of Forest Retained	0.00	Acres
Acreage of Forest Cleared	0.96	Acres
Acreage of Forest Planted	0.00	Acres
Stream Buffers (Seq. 826)		
Length	475	LF
Average Width	175	LF (left side)
	400	LF (right side)

FOREST CONSERVATION WORKSHEET
Pueblo Road SWM Retrofit(Seq. 826)

NET TRACT AREA:	worksheet updated 8/5/2002	
A. Total tract area ...		1.28
B. Land dedication acres (parks, county facility, etc.) ...		0.00
C. Land dedication for roads or utilities (not being constructed by this plan) ...		0.00
D. Area to remain in commercial agricultural production/use ...		0.00
E. Other deductions (specify)		0.00
F. Net Tract Area ....=		1.28

LAND USE CATEGORY: (from *Trees Technical Manual*)
Input the number "1" under the appropriate land use, limit to only one entry.

ARA	MDR	IDA	HDR	MPD	CIA
0	0	1	0	0	0

G. Afforestation Threshold ...	15%	x F =	0.19
H. Conservation Threshold ...	20%	x F =	0.26
EXISTING FOREST COVER:			
I. Existing forest cover ....=			0.96
J. Area of forest above afforestation threshold ....=			0.77
K. Area of forest above conservation threshold ....=			0.70
BREAK EVEN POINT:	0.14 (.2x.7) +.26=0.40		
L. Forest retention above threshold with no mitigation ....=			0.56
M. Clearing permitted without mitigation ....=			0.56
PROPOSED FOREST CLEARING:			
N. Total area of forest to be cleared ....=			0.96
O. Total area of forest to be retained ....=			0.00
PLANTING REQUIREMENTS:			
P. Reforestation for clearing above conservation threshold ....=	.7x.25 = 0.175		0.18
Q. Reforestation for clearing below conservation threshold ....=	2x.26-0=.52		0.52
R. Credit for retention above conservation threshold ....=			0.00
S. Total reforestation required ....=			0.70
T. Total afforestation required ....=			0.00
U. Credit for landscaping (may not exceed 20% of "S") ......=			0.00
V. Total reforestation and afforestation required ....=			0.70
Afforestation Provided ....=			0.00

Prepared 12152014

GENERAL NOTES
1. Site topography taken from Montgomery County GIS 5 foot interval and augmented with field survey data by Charles P. Johnson and Associates.
2. The site Zoning is R-200 and within the Great Seneca Creek watershed, Use class I.
3. The site land use is Park. The surrounding land uses around the site are medium density residential areas.
4. Property information obtained by Montgomery County GIS.
5. 0.14 Ac. (10%) of the site is located within delineated wetlands. 0.80 Ac. (62%) of site is located within 100 Year Flood Plain. 1.28 Ac. (91%) of site is located within Stream Valley Buffer. Site is not within a Special Protection Area.
6. Gross Tract Area 1.28 Ac. Net Tract Area 1.28 Ac.
7. 100-year floodplain shown within study area as per information gleaned from analysis of existing conditions.
8. Maryland State Plane NAD 1983 Horizontal Datum used.
9. Tax Map Reference ES53.
10. WSSC grid 222NW12
11. NRI-FSD #420130170 (Seq. 826)

THE MARYLAND-NATIONAL CAPITAL PARK AND PLANNING COMMISSION
Final Forest Conservation Plan
APPROVAL
Plan No. SC2014-020
Signature: Glenn Kaegen   Date: 12/3/2015

RECEIVED M-NCPPC
DEC - 2 2015
MONTGOMERY COUNTY PLANNING DEPARTMENT

TOTAL DISTURBED AREA=1.28 Ac

UPDATES/REVISIONS :
1. Per Planning Review comments dated 07/24/2014.
2. Per Planning Review comments dated 07/02/2015.
3. Per Planning Review comments dated 08/2015 (email).

PROFESSIONAL CERTIFICATION

I hereby certify that this plan is prepared in accordance with Maryland Forest Conservation Regulations.

STATE OF MARYLAND — ERIC JOHN STURM — LANDSCAPE ARCHITECT

DATE: 12/1/2015
ERIC J. STURM
REGISTERED LANDSCAPE ARCHITECT # MD 755

DEVELOPER'S CERTIFICATE

THE UNDERSIGNED AGREES TO EXECUTE ALL THE FEATURES AND REQUIREMENTS OF THIS SITE PLAN IN ACCORDANCE WITH THE AGREEMENT BETWEEN MONTGOMERY COUNTY PLANNING BOARD AND THE UNDERSIGNED.

DATE: 12/01/15   BY: Gene Gopenko

DEVELOPER'S NAME/COMPANY NAME/PARTNERSHIP NAME/NAME OF CONTRACT PURCHASER

GENE GOPENKO
PRINTED NAME

WSSC GRID: 222 NW 12, TAX MAP: ES53
FOREST CONSERVATION DETAILS
SEQUENCE NO. 826

PUEBLO ROAD

GAITHERSBURG (9th) ELECTION DISTRICT
MONTGOMERY COUNTY, MARYLAND

CPJ Associates — Charles P. Johnson & Associates, Inc.
Civil and Environmental Engineers • Planners • Landscape Architects • Surveyors
1751 Elton Rd., Ste. 300 Silver Spring, MD 20903 301.434.7000 Fax: 301.434.9394
www.cpja.com • Gaithersburg, MD • Frederick, MD • Stevensville, MD • Fairfax, VA

CLIENT: Montgomery County
Department of Environmental Protection
255 Rockville Pike, Suite 120
Rockville, Maryland 20850-4166
Phone: (240) 777-7723
Contact: Mr. Gene Gopenko

PRELIMINARY PLAN NO: N/A	SITE PLAN NO: N/A		
DESIGN EJS	SHEET 2	OF 2	
DRAFT ADG/GC			
DATE MAY, 2014	SC/SWM: 24 OF 24		
SCALE N.T.S	FILE NO: 36-188-22.2B		

COPYRIGHT © LATEST DATE HEREON CHARLES P. JOHNSON & ASSOCIATES, INC. ALL RIGHTS RESERVED, UNAUTHORIZED USE OR REPRODUCTION IS PROHIBITED.

Attached Xrefs: TB24x36/GS Topo-565/24-02s7-9/08-826-01/08-04