MONTGOMERY COUNTY POLICE DEPARTMENT

3A-R-INDEX	INDEX
3A-R-001	GENERAL NOTES
3A-R-101	RANGE SITE PLAN
3A-R-102	RANGE 1 PLAN
3A-R-103	RANGE 2 PLAN
3A-R-104	RANGE 1 BAFFLE HANGING POINTS
3A-R-105	RANGE 2 BAFFLE HANGING POINTS
3A-R-106	RANGE 1 REFLECTED CEILING PLAN
3A-R-107	RANGE 2 REFLECTED CEILING PLAN
3A-R-108	RANGE 1 TRAP FOOTPRINT
3A-R-109	RANGE 2 TRAP FOOTPRINT
3A-R-110	SCREW CONVEYOR LAYOUT
3A-R-301	RANGE 1 SECTION
3A-R-302	RANGE 2 SECTION
3A-R-303	WALL PENETRATION DETAILS
3A-R-304	TRACK LAYOUT AND WALL ANCHOR POINTS
3A-R-511	BAFFLE DETAILS
3A-R-512	TACTICAL BAFFLE DETAILS
3A-R-521	TCT TRAP DETAIL
3A-R-531	S-RET DETAILS
3A-R-532	INVERTED TARGETS DETAILS
3A-R-541	SCREW CONVEYOR DETAILS
3A-R-542	SCREW CONVEYOR SYSTEM DETAILS
3A-R-551	STALL DETAILS
3A-R-592	TORIT DCU DETAILS
3A-R-597	AIR COMPRESSOR DETAILS
3A-R-701	RANGE 1 ELECTRICAL
3A-R-702	RANGE 2 ELECTRICAL
3A-R-728	CONTROL ROOM LAYOUT
3A-R-734	ELECTRICAL BOX DETAILS
3A-R-741	SCREW CONVEYOR ELECTRICAL DETAILS
3A-R-792	TORIT DCU ELECTRICAL DETAILS

ACTION TARGET

CLIENT

MONTGOMERY COUNTY MARYLAND
DEPARTMENT OF GENERAL SERVICES
OFFICE OF SPECIAL PROJECTS
101 MONROE STREET, 4TH FLOOR
ROCKVILLE, MARYLAND 20850

PRIME A/E

BAKER AND ASSOCIATES
3601 EISENHOWER AVE
ALEXANDRIA, VA 22304
(703) 960-5500

CONSULTANT

VANDERWEIL
625 N. WASHINGTON ST.
ALEXANDRIA, VA 22314
(703) 683-9700

100% SUBMITTAL

NO.	DATE	REVISIONS DESCRIPTION

MONTGOMERY COUNTY MULTI-AGENCY SERVICE PARK

INDEX

Project Number

Issued for

Date

Scale AS NOTED

Drawing 3A-R-INDEX

DESIGN CRITERIA

-FIXED POSITION FIRING RANGE:
TRAJECTORY'S START AT 1' ABOVE FINISHED FLOOR, AT FIRING LINE
SECONDARY TRAJECTORY'S DESIGNED TO CONTAIN 8" PROJECTILE DEFLECTION.
BAFFLE LAYOUT PROVIDES STEEL COVERAGE OF TRAJECTORY + 2" ON BAFFLE/TRAP.
COVERAGE EXTENDS 36" BEHIND FIRING LINE, PROVIDING A 90" CONTAINMENT AREA AT FIRING LINE.
BAFFLE ANGLE DESIGNED TO NOT EXCEED 30°.
TARGETRY HEIGHT DESIGNED TO PLACE THE TOP OF HEAD AT 5'-10" AFF.

-TACTICAL FIRING RANGE:
TRAJECTORY'S START AT 1' ABOVE FINISHED FLOOR, AT FURTHEST FIRING POSITION TO 10 METERS
TRAJECTORY'S AT 3 METER TO 10 METER LOCATIONS START AT 4' ABOVE FINISHED FLOOR
SECONDARY TRAJECTORY'S DESIGNED TO CONTAIN 6" PROJECTILE DEFLECTION.
BAFFLE LAYOUT PROVIDES STEEL COVERAGE OF TRAJECTORY + 2" ON BAFFLE/TRAP.
COVERAGE EXTENDS 36" BEHIND FIRING LINE
TACTICAL LAYOUT PROVIDES A 90" CONTAINMENT AREA FROM THE 3 METER LINE TO THE FURTHIEST FIRING POSITION.
BAFFLE ANGLE DESIGNED TO NOT EXCEED 30°.
TARGETRY HEIGHT DESIGNED TO PLACE THE TOP OF HEAD AT 5'-10" AFF.

-M.A.T.C.H. (MODULAR ARMORED TACTICAL COMBAT HOUSE):
DESIGNED TO CONTAIN ROUNDS FIRED BETWEEN 0"AFF AND 84" AFF.
WALLS DESIGNED TO BE A NOMINAL 8' TALL, WITH 84" AFF AND ABOVE DESIGNATED NO SHOOT ZONE.

WALL SYSTEM AND GRID REFERENCES DESIGNED ON A 4'-0" x 4'-0" GRID.

PAINT SCHEME:
RED PAINT - NO SHOOT ZONE
WHITE PAINT - SHOOT ZONE
WHEN CONFIGURING TRAINING SENARIO'S BE AWARE OF THE TRAJECTORY OF THE ROUND AFTER IT PENETRATES THE INTENDED TARGET.
TAN PAINT - CAUTION ZONE
ROUNDS HAVE POTENTIAL TO PENETRATE THIS ZONE.

-BUILDING / EQUIPMENT ACCESS
SCREW CONVEYOR SYSTEM / DUST COLLECTION SYSTEM:
SUGGESTED ACCESS AREA AROUND EQUIPMENT FOR THE DISPOSE OF COLLECTED MATERIALS IS:
4'-6" - FOR A FORKLIFT
3'-0" - FOR A PALLET JACK

SPACE NEEDED FOR MATERIALS INSTALLATION AND INSTALLATION EQUIPMENT:
SUGGESTED ACCESS AREA TO RANGE AREA: (FOR ENTIRE DURATION OF INSTALLATION)
MIN (1) 4'-6" WIDE BY 7'-6" TALL ACCESS PER RANGE/BAY

GENERAL ELECTRICAL NEEDS:

-GENERAL ELECTRICAL REQUIREMENTS FOR RANGES AND MAJOR EQUIPMENT:

1. RANGE WILL HAVE 120/240 VAC AND MULTIPLE 20 AMP CIRCUITS PROVIDED BY OTHERS IF ANY OF THE FOLLOWING CONDITIONS ARE PRESENT IN ATTACHED RANGE DESIGN.
IF:
- TARGETRY IS PRESENT.
- TARGETRY CONTROL EQUIPMENT IS PRESENT.
- STALL (AND/OR) RANGE LIGHTING IS PRESENT.
- COMMUNICATION SYSTEMS ARE PRESENT.
- A DUST COLLECTION UNIT IS PRESENT.
- AN AIR COMPRESSOR IS PRESENT

2. RANGE WILL HAVE MULTIPLE 3 PHASE 208/240/480 VAC DISCONNECTS PROVIDED BY OTHERS IF ANY OF THE FOLLOWING CONDITIONS ARE PRESENT IN ATTACHED RANGE DESIGN.
IF:
- A SCREW CONVEYOR SYSTEM IS PRESENT. (TYPICALLY UTILIZES 2 OR MORE 3HP 3 PHASE MOTORS)
- A DUST COLLECTION UNIT IS PRESENT.

DISCLAIMERS

-ELECTRICAL:
WHERE ELECTRICAL CONTRACTOR IS REQUIRED ALL ACTION TARGET INC. ELECTRICAL DRAWINGS WILL BE USED ONLY AS REFERENCE MATERIAL FOR THE ELECTRICAL CONTRACTOR TO UTILIZE IN THEIR DESIGN OF THE COMPLETE BUILDING / RANGE SYSTEM (UNLESS NOTED OTHERWISE.) FINAL LOCATION OF ELECTRICAL EQUIPMENT CONTAINED IN THE ACTION TARGET INC. ELECTRICAL LAYOUTS TO BE VERIFIED WITH ACTION TARGET INC., ELECTRICAL CONTRACTOR, AND CUSTOMER BEFORE INSTALLATION.

-ARCHITECTURAL:
ALL BUILDING MEASUREMENTS ARE TO BE CONSIDERED ACTION TARGET INC. SUGGESTIONS. UNLESS PROPER DIMENSIONAL PLANS / INFORMATION HAS BEEN PROVIDED. ACTION TARGET INC. IS NOT LIABLE.FOR ANY CONFLICTS BETWEEN IT'S EQUIPMENT AND ANY VARIATIONS FROM THE BUILDING DESIGN (AS PORTRAYED FROM CUSTOMER TO ACTION TARGET INC. EITHER BY PROVIDED PLANS OR OTHER FORM OF COMMUNICATION) AND THE COMPLETED BUILDINGS DIMENSIONS AND LAYOUT. ADDITIONAL MATERIAL AND PRODUCT REDESIGN MAY BE REQUIRED IF THE STRUCTURE VARIES FROM INDICATED SIZE AND LAYOUT.

-STRUCTURAL:
WHERE ENGINEER IS REQUIRED ALL ITEMS PERTAINING TO ACTION TARGET INC. MATERIALS AND EQUIPMENT, AND IT'S CONNECTION TO / SUPPORT FROM THE STRUCTURE IS TO BE VERIFY AND APPROVED BY THE ENGINEER OF RECORD. ALL ACTION TARGET INC. PLANS INDICATING ANCHOR SIZES AND CONNECTION METHOD, CONCRETE DEPTH, REBAR LAYOUTS, AND ANY OTHER ITEMS PERTAINING TO THE CONNECTION AND SUPPORT OF ACTION TARGET INC. EQUIPMENT TO BE UTILIZED BY ENGINEER AS ACTION TARGET INC.S PREFERRED METHOD.

-USE AND REPRODUCTION:
THE USE OF THESE PLANS SHALL BE RESTRICTED TO THE ORIGINAL PROJECT SITE FOR WHICH THEY WERE PREPARED. PUBLICATIONS EXPRESSLY LIMITED TO SUCH USE, RE-USE, REPRODUCTION, OR PUBLICATION BY ANY METHOD IN WHOLE OR PART IS PROHIBITED, UNLESS WRITTEN CONSENT IS PROVIDED BY ACTION TARGET INC. DRAWINGS REMAIN THE PROPERTY OF ACTION TARGET INC. WITHOUT RESERVATION.

SYMBOLS & CALLOUTS

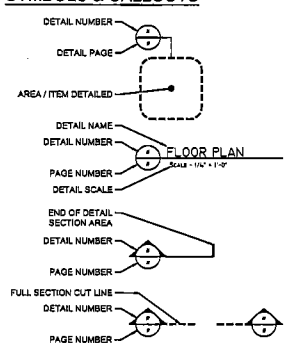

DIMENSION CLARIFICATION

ALL DIMENSION LINES SHOW DEFAULT OF U.S. STANDARD UNITS, WITH METRIC UNITS AS SECONDARY INDICATED BY THERE LOCATION BETWEEN THE FOLLOWING SYMBOLS [ ]
SEE EXAMPLE BELOW FOR CLARIFICATION:

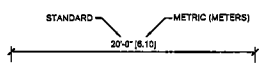

ABBREVIATIONS

ABBREVIATED	UN-ABBREVIATED
AFF	ABOVE FINISHED FLOOR
APRX	APPROXIMATE / APPROXIMATELY
APROX	APPROXIMATE / APPROXIMATELY
ATI	ACTION TARGET INC.
AWG	AMERICAN WIRE GAUGE
BOS	BOTTOM OF STEEL
BOT	BOTTOM
CL	CENTER LINE
CFM	CUBIC FEET PER MINUTE
DCU	DUST COLLECTION UNIT
EMT	ELECTRICAL METALLIC TUBING
EQ	EQUAL / EQUALS
EQ APROX	EQUAL APPROXIMATE
HVAC	HEATING, VENTILATION, AND AIR CONDITIONING
LBS	POUNDS
MDU	MOTOR DRIVE UNIT
NTS	NOT TO SCALE
PSI	POUNDS PER SQUARE INCH
RBT	RUBBER BERM TRAP
SCS	SCREW CONVEYOR SYSTEM
SPKR	SPEAKER
TCT	TOTAL CONTAINMENT TRAP
TCT 2	TOTAL CONTAINMENT TRAP VERSION 2
TCT 4	TOTAL CONTAINMENT TRAP VERSION 4
TCT 4D	TOTAL CONTAINMENT TRAP VERSION 4D
TYP	TYPICAL
UON	UNLESS OTHERWISE NOTED

MONTGOMERY COUNTY MARYLAND
DEPARTMENT OF GENERAL SERVICES
OFFICE OF SPECIAL PROJECTS
101 MONROE STREET, 10TH FLOOR
ROCKVILLE, MARYLAND 20850
PRIME A/E:
BAKER AND ASSOCIATES
3601 EISENHOWER AVE
ALEXANDRIA, VA 22304
(703) 960-8800
CONSULTANT
VANDERWEIL
625 N. WASHINGTON ST.
ALEXANDRIA, VA 22314
(703) 683-9700

100% SUBMITTAL

NO.	DATE	REVISIONS DESCRIPTION

MONTGOMERY COUNTY MULTI-AGENCY SERVICE PARK

GENERAL NOTES

Project Number
Issued by
Date
Scale AS NOTED
Drawing 3A-R-001

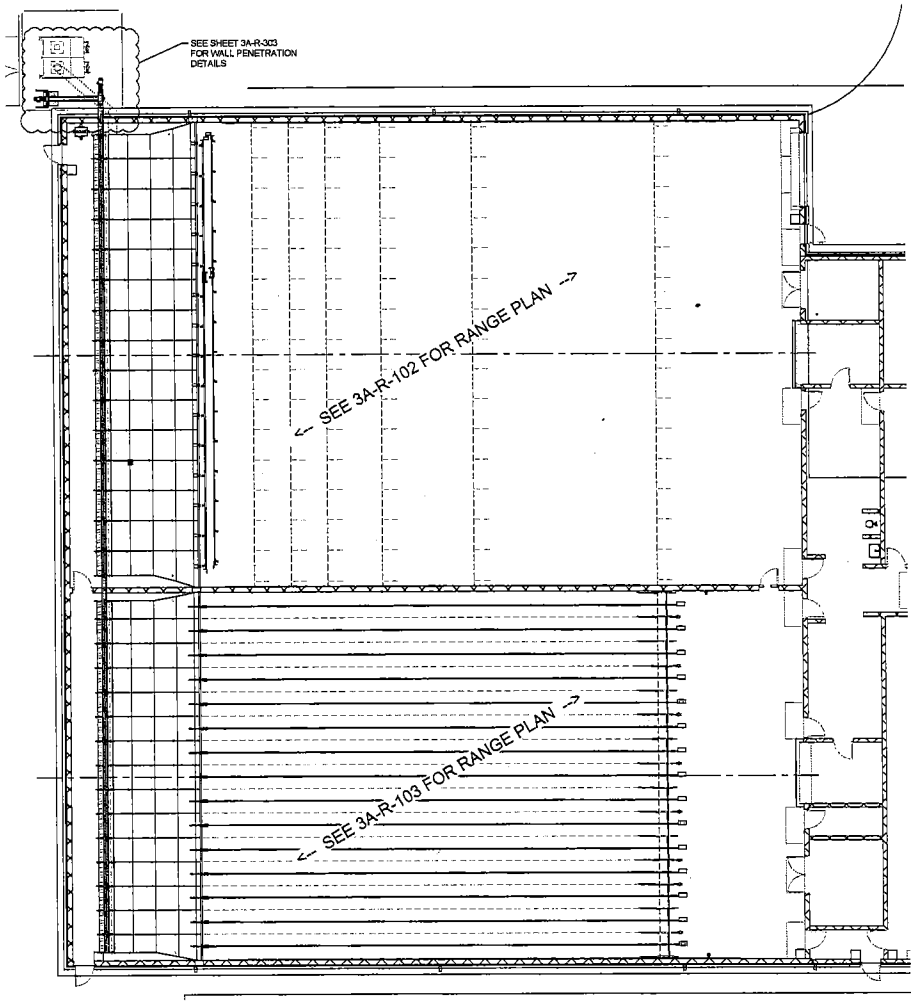

1 RANGE SITE PLAN
3A-R-101 SCALE - 1/8" = 1'-0"

MONTGOMERY COUNTY
MARYLAND
DEPARTMENT OF GENERAL SERVICES
OFFICE OF SPECIAL PROJECTS
101 MONROE STREET, 5TH FLOOR
ROCKVILLE, MARYLAND 20850
PRIME A/E

BAKER AND ASSOCIATES
3601 EISENHOWER AVE
ALEXANDRIA, VA 22304
(703) 960-5500
CONSULTANT

VANDERWEIL
625 N. WASHINGTON ST.
ALEXANDRIA, VA 22314
(703) 683-9700

100% SUBMITTAL

NO.	DATE	REVISIONS DESCRIPTION

MONTGOMERY COUNTY MULTI-AGENCY SERVICE PARK

RANGE SITE PLAN

Project Number
Issued for
Date
Scale AS NOTED
Drawing 3A-R-101

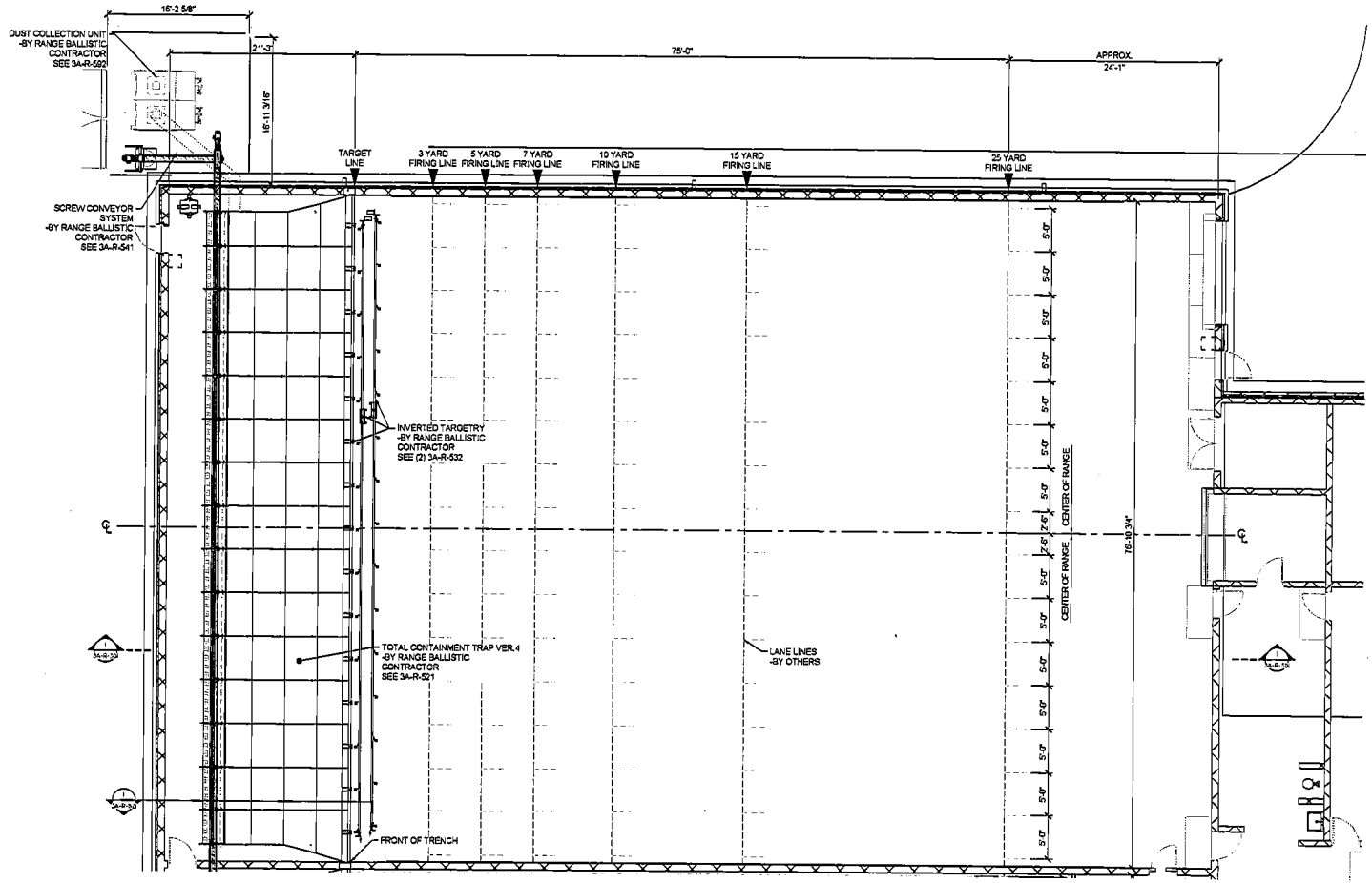

1 RANGE PLAN
3A-R-101 SCALE - 3/16" = 1'-0"

MONTGOMERY COUNTY MARYLAND
DEPARTMENT OF GENERAL SERVICES
OFFICE OF SPECIAL PROJECTS
101 MONROE STREET, 9TH FLOOR
ROCKVILLE, MARYLAND 20850

PRIME A/E

BAKER AND ASSOCIATES
3601 EISENHOWER AVE
ALEXANDRIA, VA 22304
(703) 960-8800

CONSULTANT

VANDERWEIL
625 N. WASHINGTON ST.
ALEXANDRIA, VA 22314
(703) 683-9700

100% SUBMITTAL

NO.	DATE	REVISIONS DESCRIPTION

MONTGOMERY COUNTY MULTI-AGENCY SERVICE PARK

RANGE 1 PLAN

Project Number
Issued by
Date
Scale AS NOTED
Sheet No. 3A-R-102

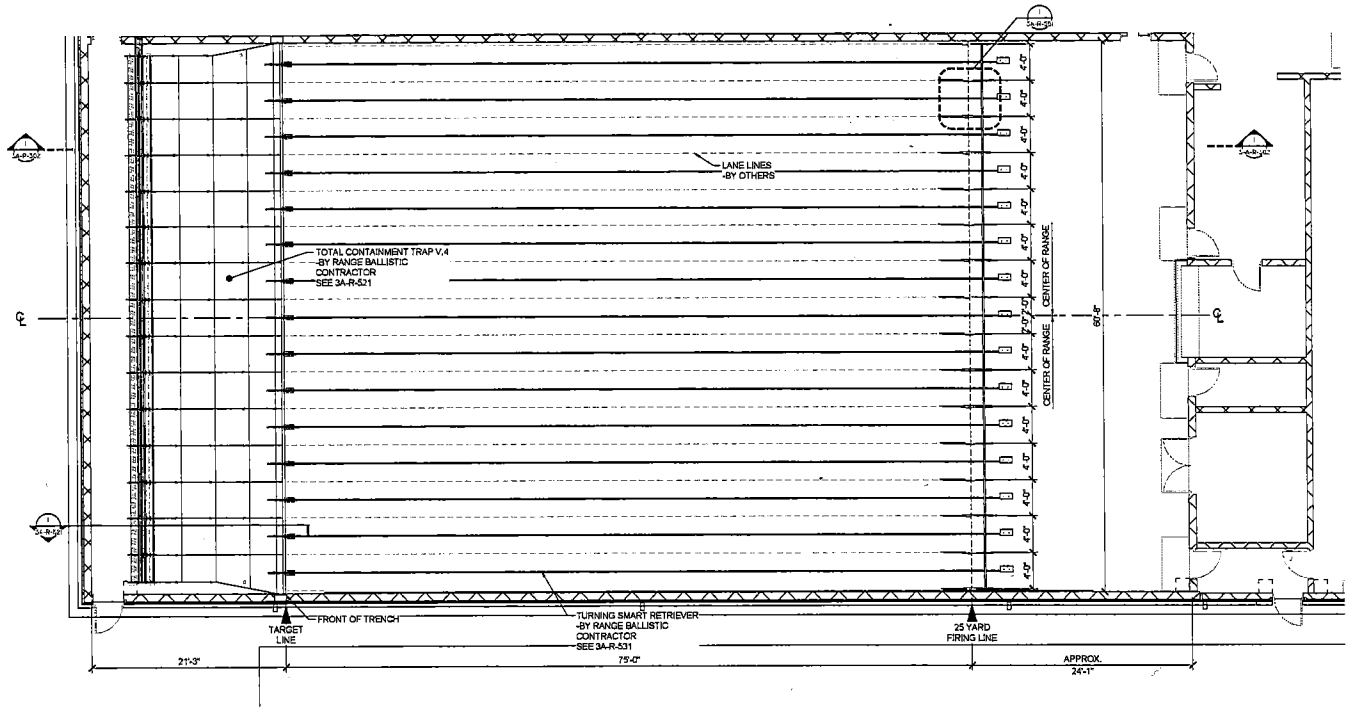

1 RANGE PLAN
3A-R-101 SCALE - 3/16" = 1'-0"

CLIENT

MONTGOMERY COUNTY
MARYLAND
DEPARTMENT OF FEDERAL SERVICES
OFFICE OF SPECIAL PROJECTS
101 MONROE STREET, 8TH FLOOR
ROCKVILLE, MARYLAND 20850

PRIME A/E

BAKER AND ASSOCIATES
3601 EISENHOWER AVE
ALEXANDRIA, VA 22304
(703) 960-8600

CONSULTANT

VANDERWEIL
625 N. WASHINGTON ST.
ALEXANDRIA, VA 22314
(703) 683-8700

100% SUBMITTAL

NO.	DATE	REVISIONS DESCRIPTION

MONTGOMERY COUNTY MULTI-AGENCY SERVICE PARK

RANGE 2 PLAN

Project Number

Issued for

Date

Scale AS NOTED

Sheet # 3A-R-103

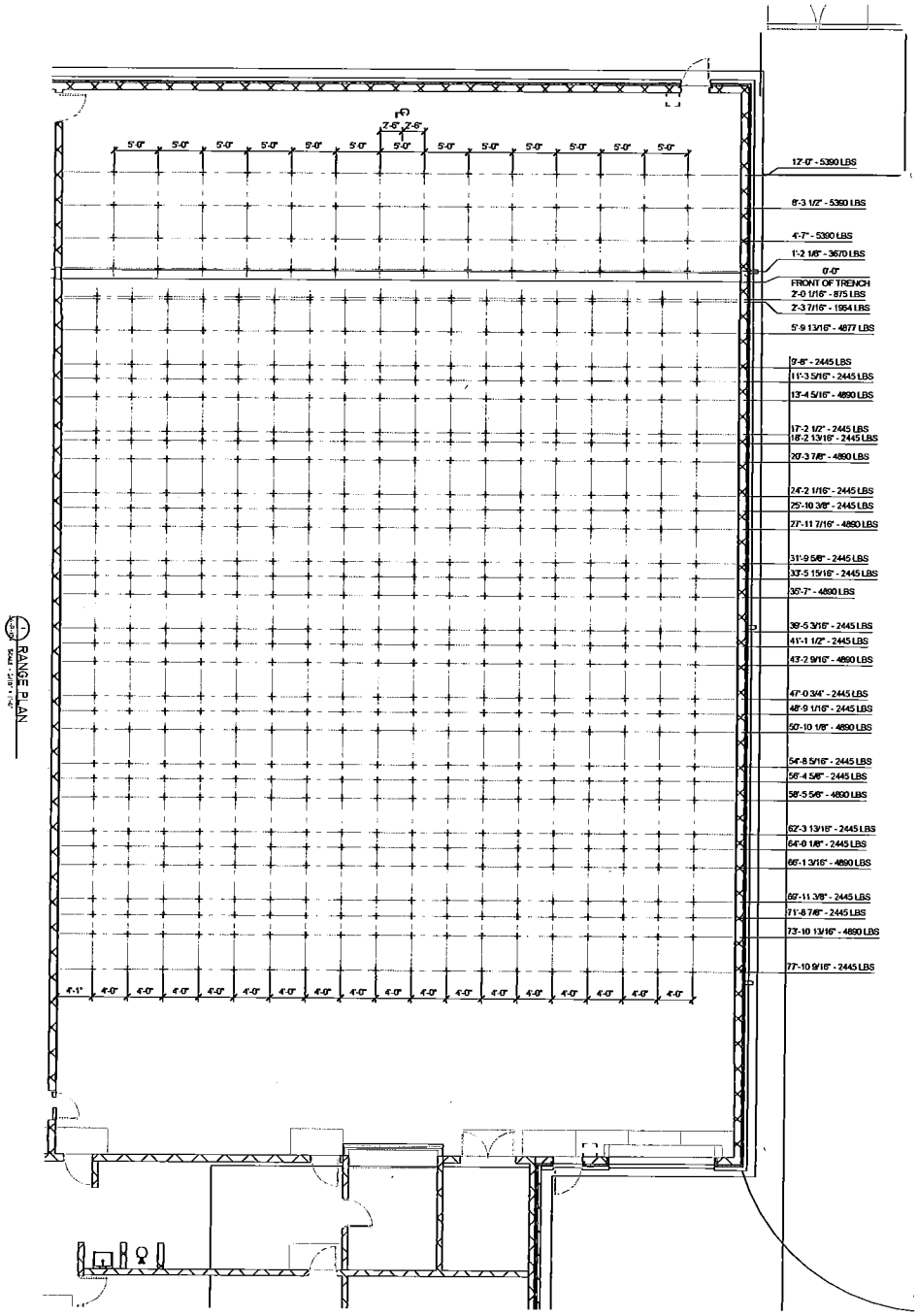

1 RANGE PLAN
SCALE: 3/16" = 1'-0"

MONTGOMERY COUNTY MULTI-AGENCY SERVICE PARK

RANGE 1 BAFFLE HANGING POINTS

REVISIONS		
NO	DATE	DESCRIPTION

100% SUBMITTAL

BAKER AND ASSOCIATES
3601 EISENHOWER AVE
ALEXANDRIA, VA 22304
(703) 960-8800
CONTACT:

VANDERWEIL
828 N. WASHINGTON ST.
ALEXANDRIA, VA 22314
(703) 683-8700

MONTGOMERY COUNTY
MARYLAND
DEPARTMENT OF GENERAL SERVICES
OFFICE OF SPECIAL PROJECTS
101 MONROE STREET, 7TH FLOOR
ROCKVILLE, MARYLAND 20850
PHONE: 240

Project Number
Sheet No
Date
Scale
24 NOV 09
Drawn
3A-R-104

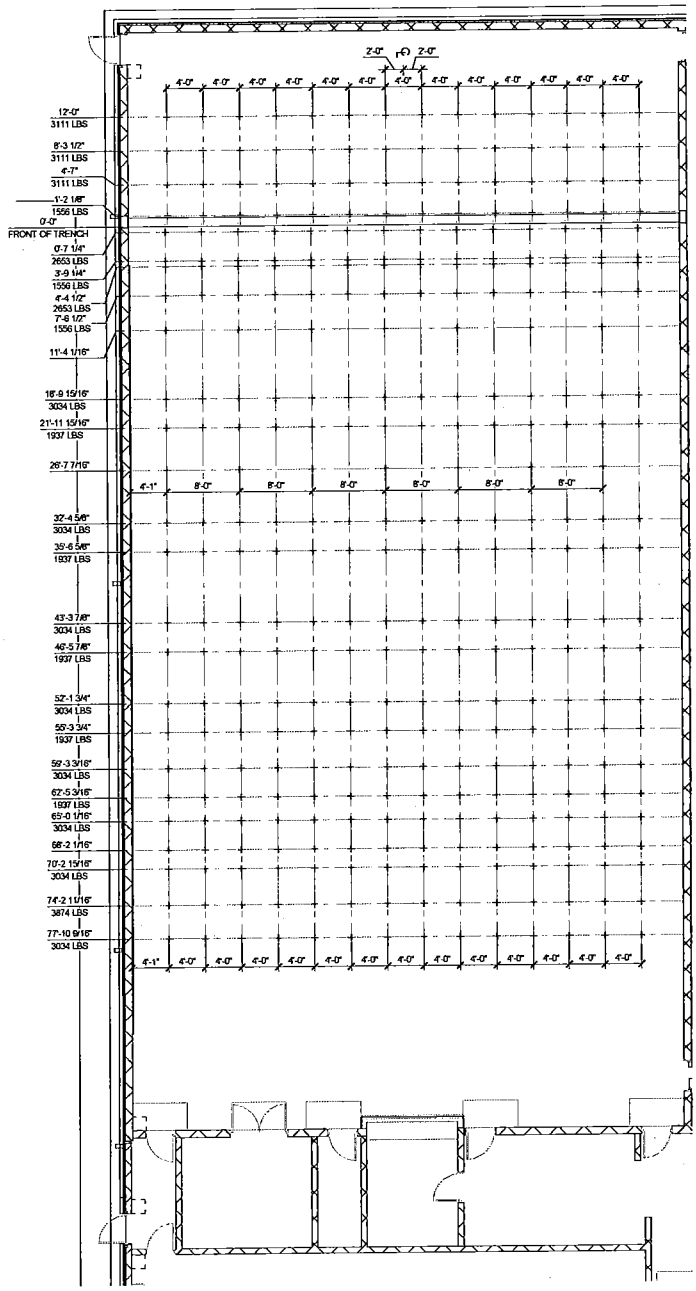

BAFFLE HANGING POINTS PLAN

SCALE: 3/16" = 1'-0"

MONTGOMERY COUNTY MULTI-AGENCY SERVICE PARK

RANGE 2 BAFFLE HANGING POINTS

REVISIONS		
NO.	DATE	DESCRIPTION

100% SUBMITTAL

CLIENT

MONTGOMERY COUNTY
MARYLAND
DEPARTMENT OF GENERAL SERVICES
OFFICE OF SPECIAL PROJECTS
101 MONROE STREET, RIVERVIEW
RESERVE, MARYLAND 20850
PRIME AE

BAKER AND ASSOCIATES
3601 EISENHOWER AVE
ALEXANDRIA, VA 22304
(703) 683-8500
CONSULTANT

VANDERWEIL
625 N. WASHINGTON ST.
ALEXANDRIA, VA 22314
(703) 683-8700

Project Number
Drawn by
Date
Scale AS NOTED
Sheet No. 3A-R-105

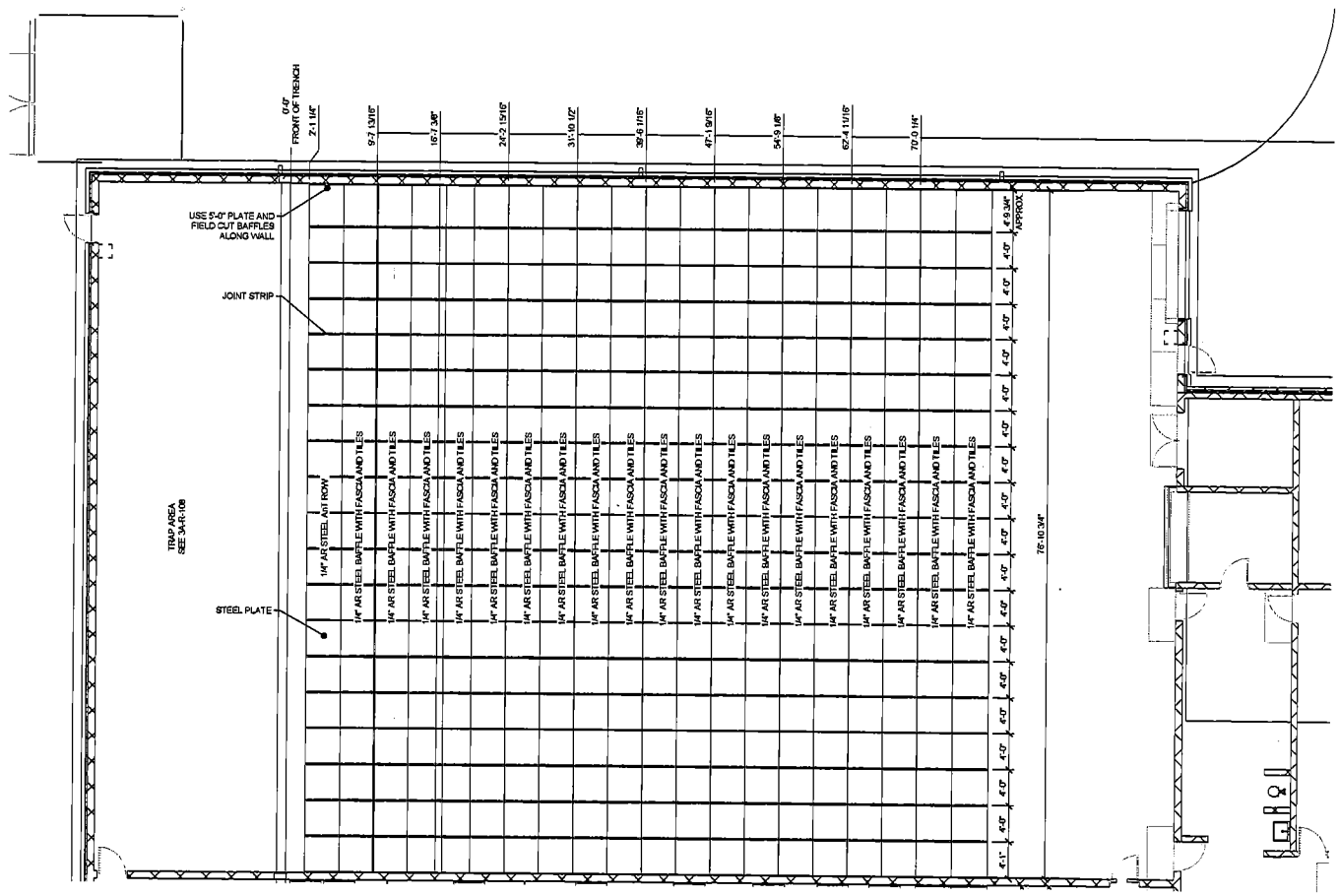

RANGE PLAN

CLIENT

MONTGOMERY COUNTY MARYLAND
DEPARTMENT OF GENERAL SERVICES
OFFICE OF SPECIAL PROJECTS

101 MONROE STREET, 5TH FLOOR
ROCKVILLE, MARYLAND 20850

PRIME A/E

BAKER AND ASSOCIATES
3601 EISENHOWER AVE
ALEXANDRIA, VA 22304
(703) 960-8800

CO-SULTANS

VANDERWEIL
625 N. WASHINGTON ST.
ALEXANDRIA, VA 22314
(703) 883-9700

100% SUBMITTAL

REVISIONS

NO.	DATE	DESCRIPTION

MONTGOMERY COUNTY MULTI-AGENCY SERVICE PARK

RANGE 1 REFLECTED CEILING PLAN

Project Number

Issued for

Date

Scale AS NOTED

Sheet 3A-R-106

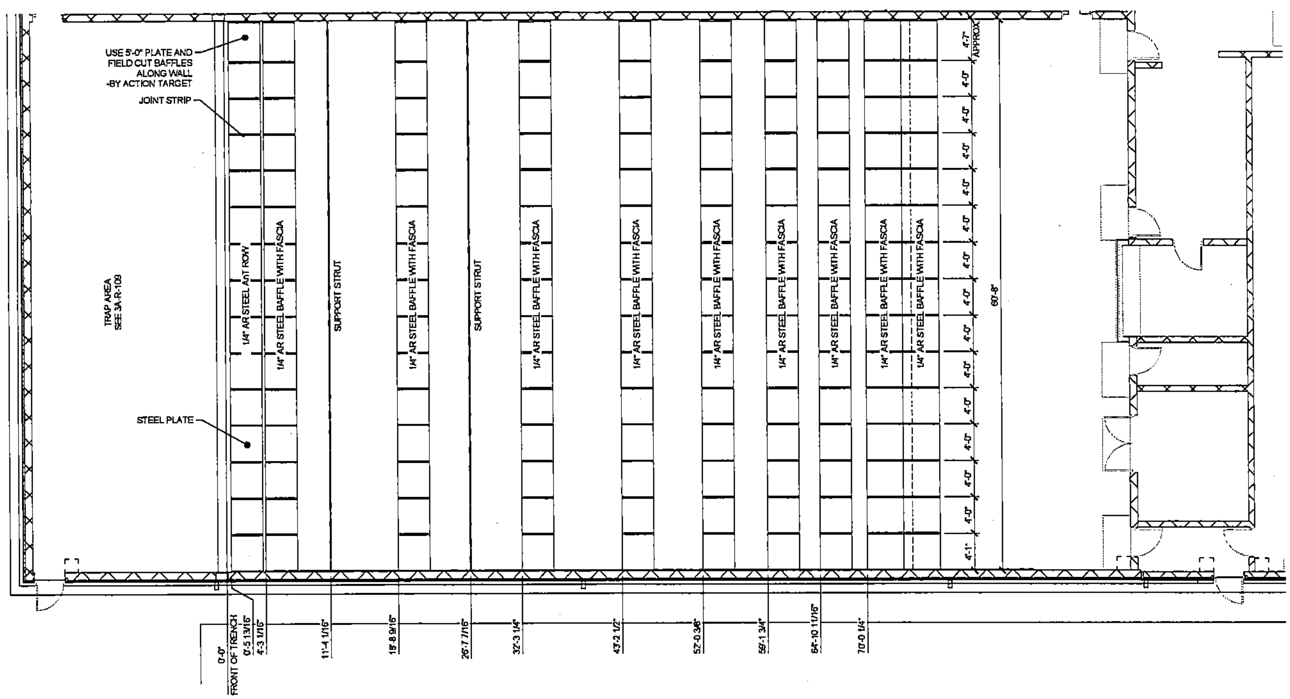

REFLECTED CEILING PLAN
SCALE - 3/16" = 1'-0"

CLIENT

MONTGOMERY COUNTY MARYLAND
DEPARTMENT OF GENERAL SERVICES
OFFICE OF SPECIAL PROJECTS
101 MONROE STREET, 9TH FLOOR
ROCKVILLE, MARYLAND 20850

PRIME A/E

BAKER AND ASSOCIATES
3601 EISENHOWER AVE
ALEXANDRIA, VA 22304
(703) 960-8800

CONSULTANT

VANDERWEIL
625 N. WASHINGTON ST.
ALEXANDRIA, VA 22314
(703) 683-9700

100% SUBMITTAL

NO	DATE	REVISIONS DESCRIPTION

MONTGOMERY COUNTY MULTI-AGENCY SERVICE PARK

RANGE 2 REFLECTED CEILING PLAN

Project Number
Issued for
Date
Scale AS NOTED
Drawing 3A-R-107

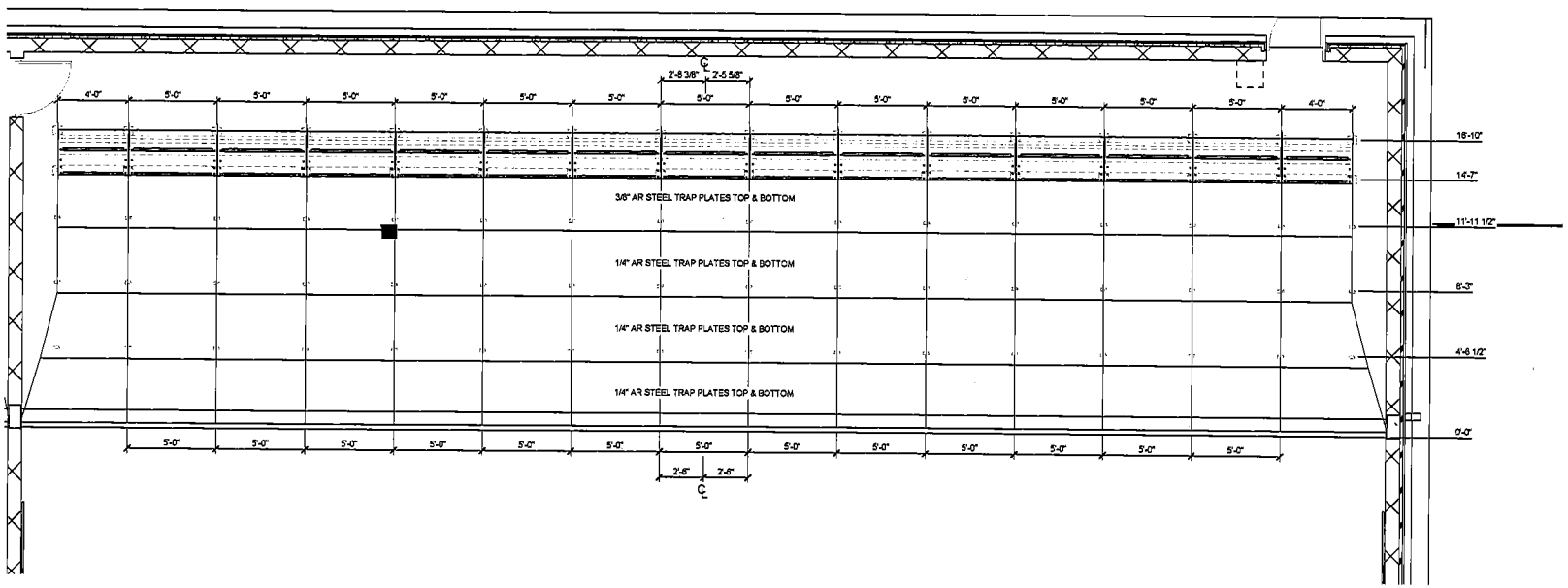

1 RANGE 1 TRAP FOOTPRINT
A-R-108 SCALE - 3/8" = 1'-0"

MONTGOMERY COUNTY MARYLAND
DEPARTMENT OF GENERAL SERVICES
OFFICE OF SPECIAL PROJECTS
101 MONROE STREET, 9TH FLOOR
ROCKVILLE, MARYLAND 20850

PRIME A/E

BAKER AND ASSOCIATES
3601 EISENHOWER AVE
ALEXANDRIA, VA 22304
(703) 960-8800

CONSULTANT

VANDERWEIL
625 N. WASHINGTON ST.
ALEXANDRIA, VA 22314
(703) 683-8700

100% SUBMITTAL

NO.	DATE	REVISIONS DESCRIPTION

MONTGOMERY COUNTY MULTI-AGENCY SERVICE PARK

RANGE 1 TRAP FOOTPRINT

Project Number
Issued for
Date
Scale AS NOTED
Sheet 3A-R-108

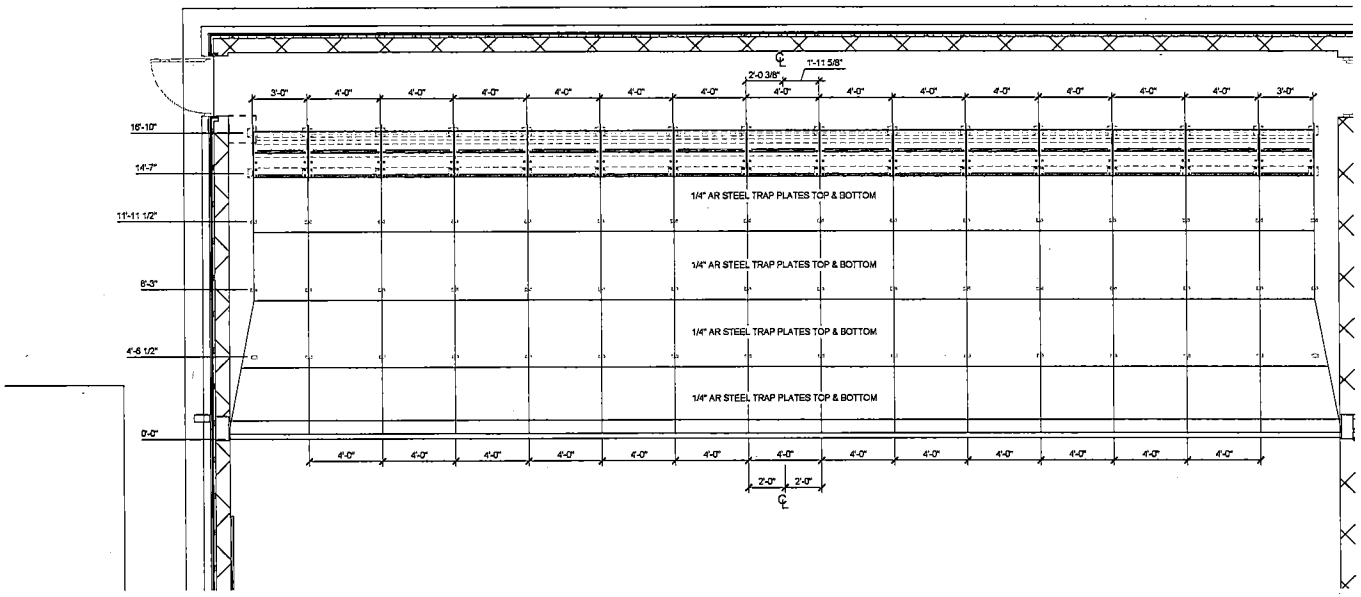

1 RANGE 2 TRAP FOOTPRINT
3A-R-109 SCALE - 3/16" = 1'-0"

CLIENT

MONTGOMERY COUNTY MARYLAND
DEPARTMENT OF GENERAL SERVICES
OFFICE OF SPECIAL PROJECTS
101 MONROE STREET, 5TH FLOOR
ROCKVILLE, MARYLAND 20850

PRIME A.E.

BAKER AND ASSOCIATES
3601 EISENHOWER AVE
ALEXANDRIA, VA 22304
(703) 960-8400

CO-CONSULTANT

VANDERWEIL
825 N. WASHINGTON ST.
ALEXANDRIA, VA 22314
(703) 683-8700

STATUS

100% SUBMITTAL

NO.	DATE	REVISIONS DESCRIPTION

MONTGOMERY COUNTY MULTI-AGENCY SERVICE PARK

RANGE 2 TRAP FOOTPRINT

Project Number
Issued for
Date
Scale AS NOTED
Drawing 3A-R-109

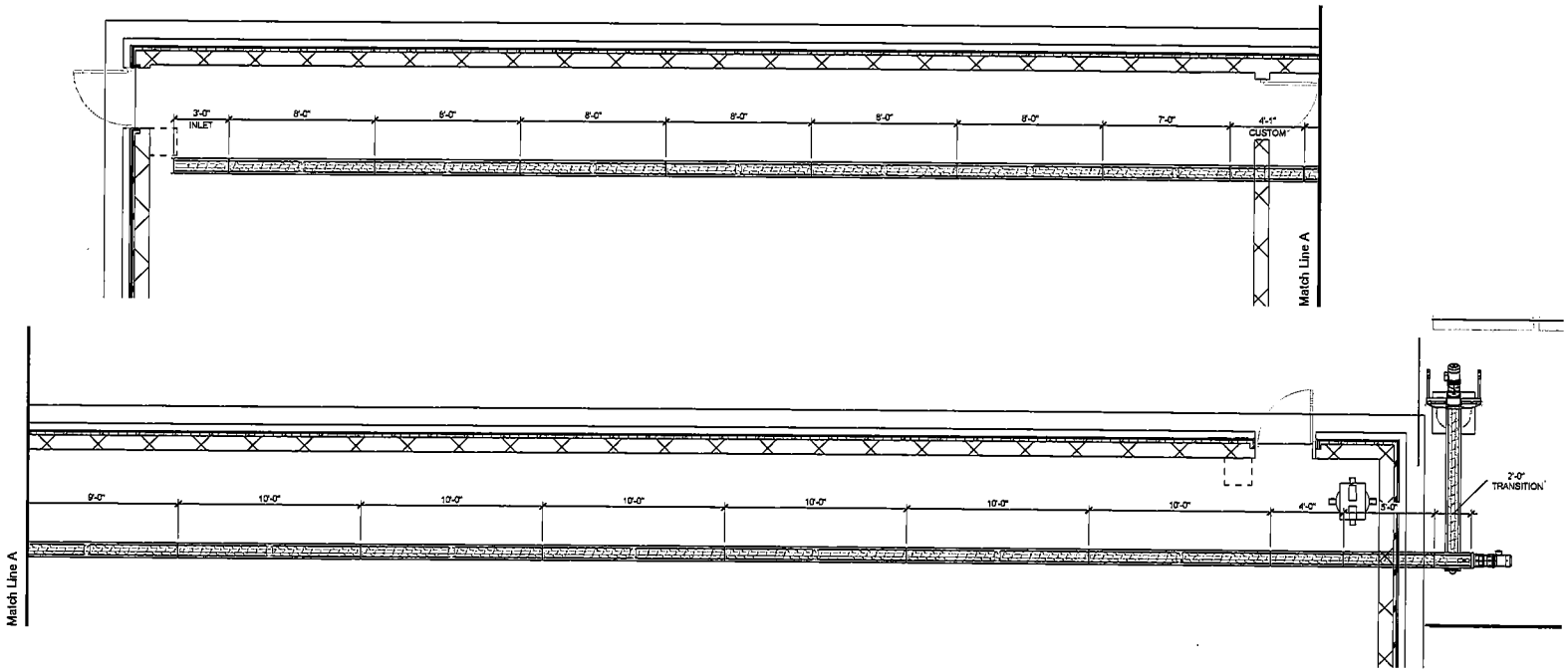

1 SCREW CONVEYOR LAYOUT
3A-R-110 SCALE - 3/16" = 1'-0"

CLIENT

MONTGOMERY COUNTY MARYLAND
DEPARTMENT OF GENERAL SERVICES
OFFICE OF CAPITAL PROJECTS
101 MONROE STREET, 9TH FLOOR
ROCKVILLE, MARYLAND 20850

PRIME A/E

BAKER AND ASSOCIATES
3601 EISENHOWER AVE
ALEXANDRIA, VA 22304
(703) 960-8800

CONSULTANT

VANDERWEIL
925 N. WASHINGTON ST.
ALEXANDRIA, VA 22314
(703) 683-9700

100% SUBMITTAL

REVISIONS		
NO.	DATE	DESCRIPTION

MONTGOMERY COUNTY MULTI-AGENCY SERVICE PARK

SCREW CONVEYOR LAYOUT

Project Number
Issued for
Date
Scale AS NOTED
Drawing No. 3A-R-110

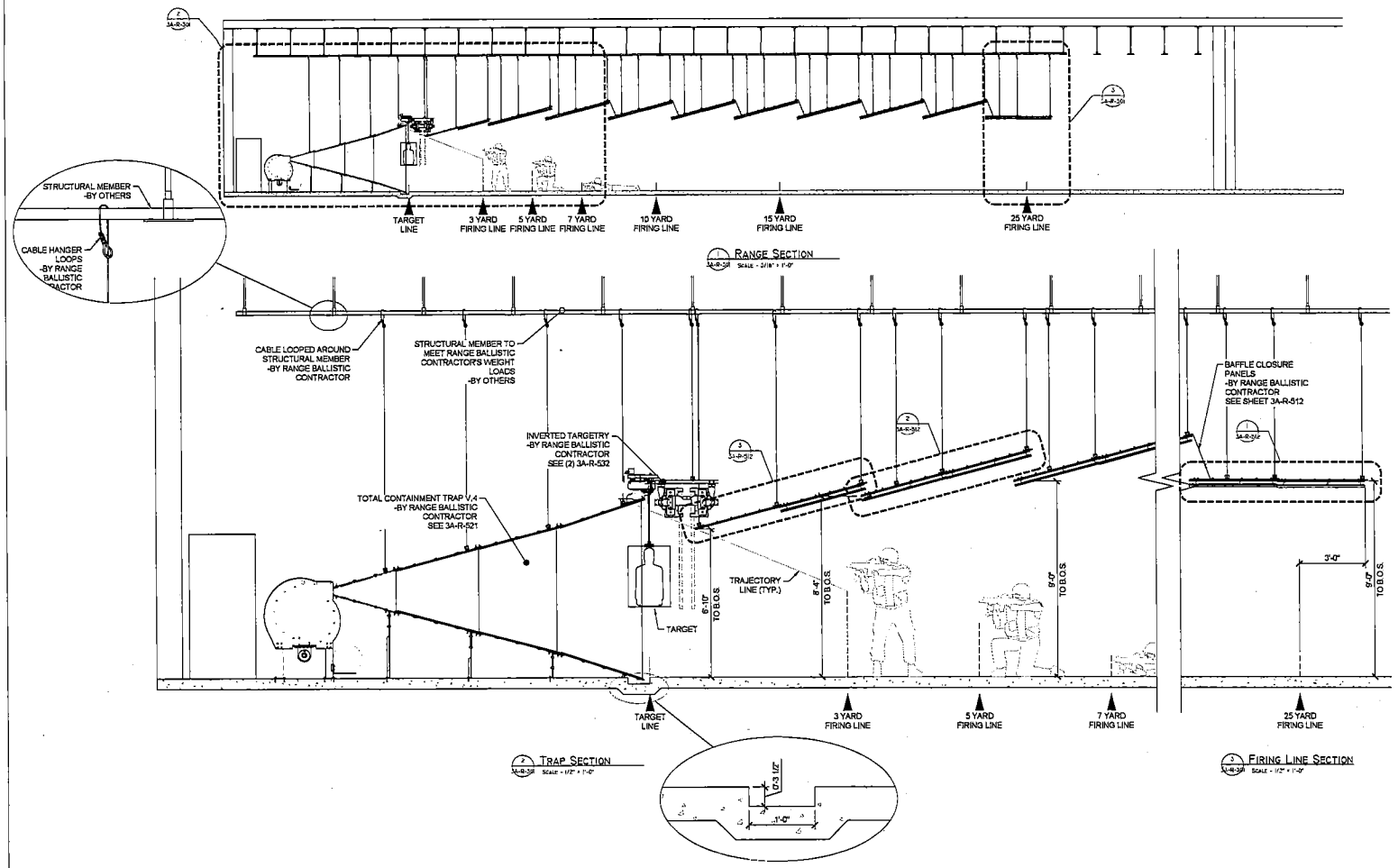

CLIENT

MONTGOMERY COUNTY MARYLAND
DEPARTMENT OF GENERAL SERVICES
OFFICE OF SPECIAL PROJECTS
101 MONROE STREET, 14TH FLOOR
ROCKVILLE, MARYLAND 20850

PRIME A.E.

BAKER AND ASSOCIATES
3601 EISENHOWER AVE
ALEXANDRIA, VA 22304
(703) 683-8600

CONSULTANT

VANDERWEIL
625 N. WASHINGTON ST.
ALEXANDRIA, VA 22314
(703) 683-9700

100% SUBMITTAL

NO.	DATE	REVISIONS DESCRIPTION

MONTGOMERY COUNTY MULTI-AGENCY SERVICE PARK

RANGE 1 SECTION

Project Number

Issued for

Date

Scale AS NOTED

Sheet 3A-R-301

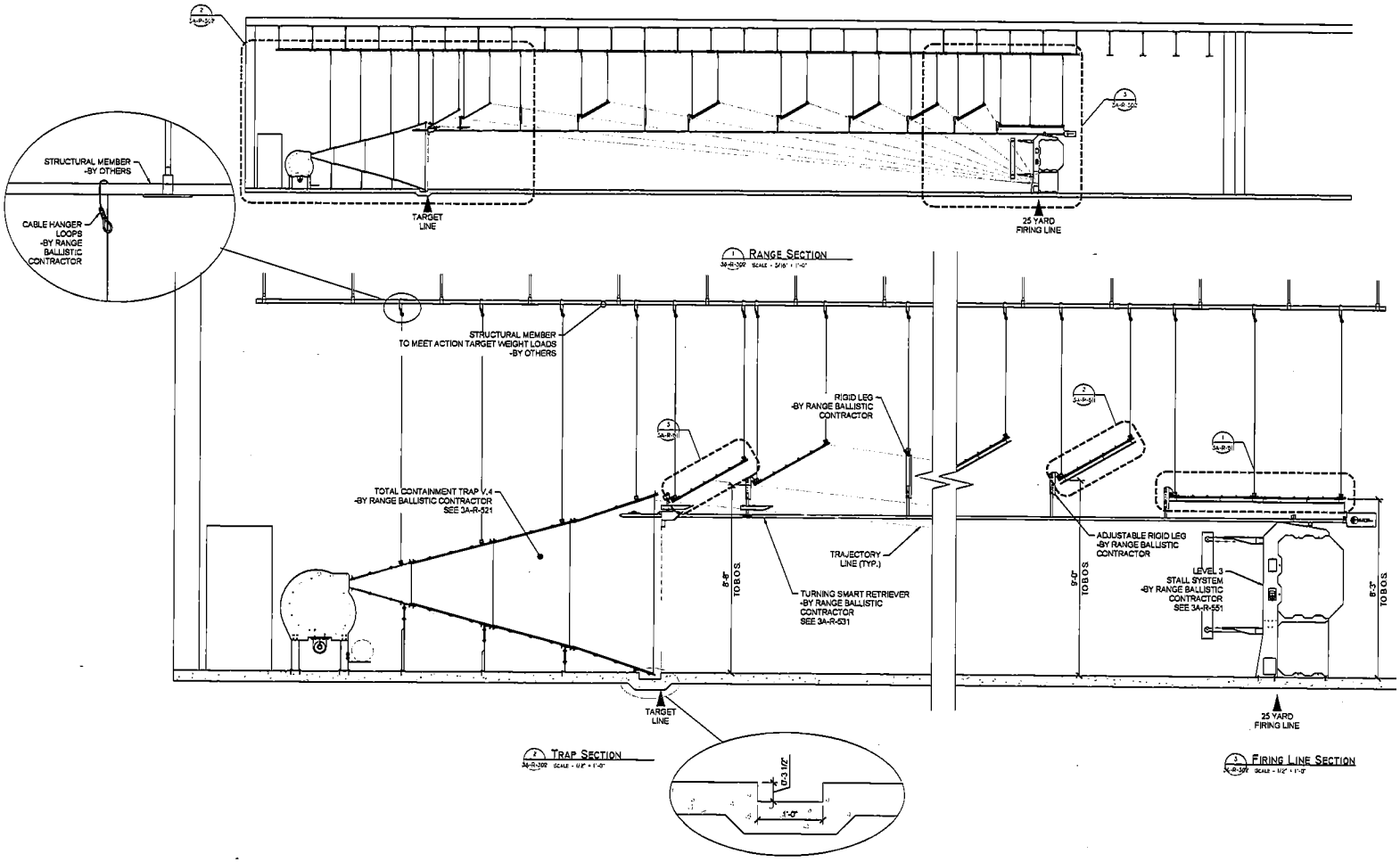

CLIENT

MONTGOMERY COUNTY MARYLAND
DEPARTMENT OF GENERAL SERVICES
OFFICE OF SPECIAL PROJECTS
101 MONROE STREET, 5TH FLOOR
ROCKVILLE, MARYLAND 20850

PRIME A/E:

BAKER AND ASSOCIATES
3601 EISENHOWER AVE
ALEXANDRIA, VA 22304
(703) 960-6800

CONSULTANT

VANDERWEIL
825 N. WASHINGTON ST.
ALEXANDRIA, VA 22314
(703) 683-9700

100% SUBMITTAL

REVISIONS		
NO.	DATE	DESCRIPTION

MONTGOMERY COUNTY MULTI-AGENCY SERVICE PARK

RANGE 2 SECTION

Project Number

Issued for

Date

Scale AS NOTED

3A-R-302

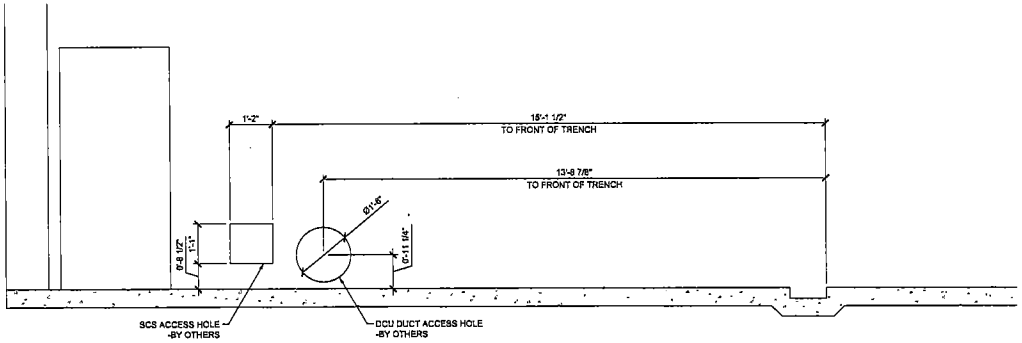

1 EXTERIOR WALL PENETRATION
3A-R-303 SCALE = 3/4" = 1'-0"

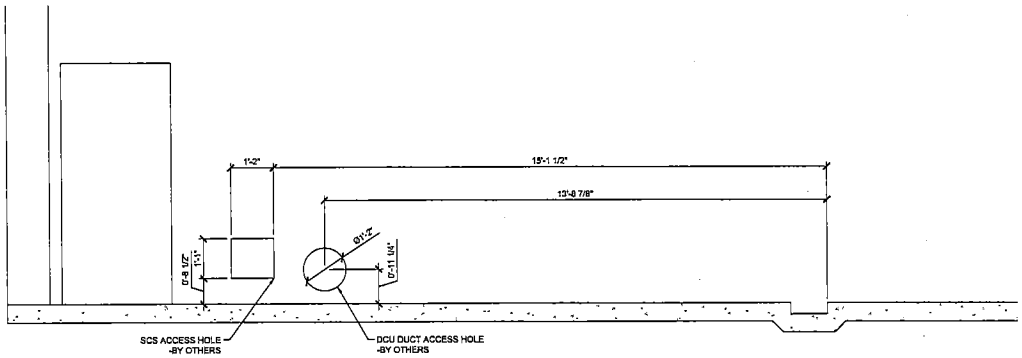

2 INTERIOR WALL PENETRATION
3A-R-303 SCALE = 3/4" = 1'-0"

CLIENT

MONTGOMERY COUNTY MARYLAND
DEPARTMENT OF GENERAL SERVICES
OFFICE OF SPECIAL PROJECTS
101 MONROE STREET, 9TH FLOOR
ROCKVILLE, MARYLAND 20850

PRIME A.E.

BAKER AND ASSOCIATES
3601 EISENHOWER AVE
ALEXANDRIA, VA 22304
(703) 960-6600

CONSULTANT

VANDERWEIL
625 N. WASHINGTON ST.
ALEXANDRIA, VA 22314
(703) 683-9700

100% SUBMITTAL

NO.	DATE	REVISIONS DESCRIPTION

MONTGOMERY COUNTY MULTI-AGENCY SERVICE PARK

WALL PENETRATION DETAILS

Project Number
Issued for
Date
Scale AS NOTED
Drawing 3A-R-303

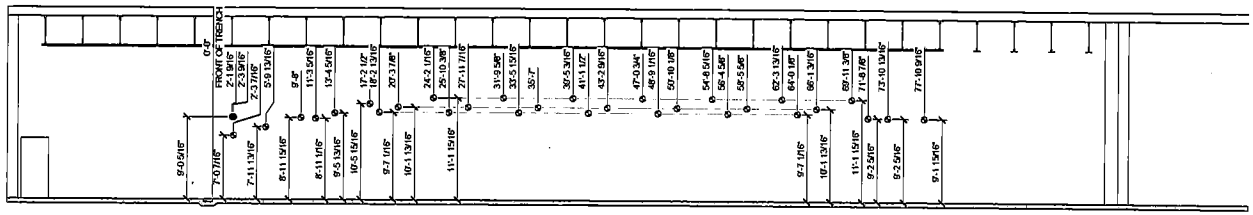

1 RANGE 1 WALL ANCHOR POINTS
SCALE - 3/16" = 1'-0"

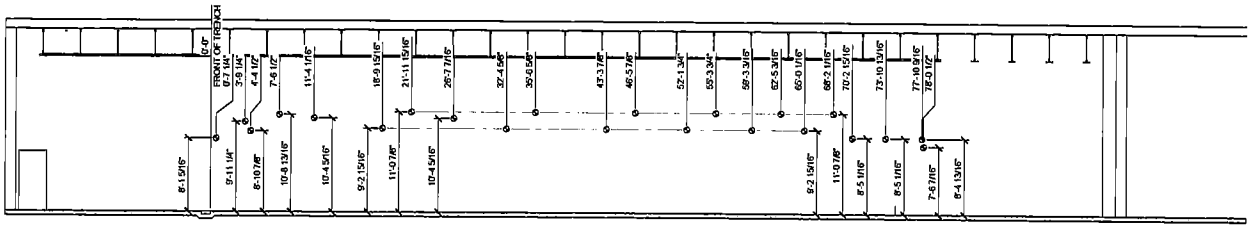

1 RANGE 2 WALL ANCHOR POINTS
SCALE - 3/16" = 1'-0"

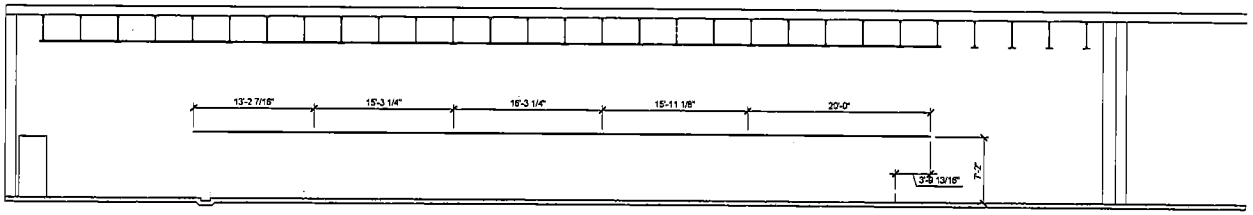

1 RANGE 2 TRACK LAYOUT
SCALE - 3/16" = 1'-0"

CLIENT

MONTGOMERY COUNTY MARYLAND
DEPARTMENT OF GENERAL SERVICES
OFFICE OF SPECIAL PROJECTS
101 MONROE STREET, 6TH FLOOR
ROCKVILLE, MARYLAND 20850

PRIME AE

BAKER AND ASSOCIATES
3601 EISENHOWER AVE
ALEXANDRIA, VA 22304
(703) 960-8800

CONSULTANT

VANDERWEIL
825 N. WASHINGTON ST.
ALEXANDRIA, VA 22314
(703) 683-8700

100% SUBMITTAL

NO.	DATE	REVISIONS DESCRIPTION

MONTGOMERY COUNTY MULTI-AGENCY SERVICE PARK

WALL ANCHOR POINTS & TRACK LAYOUT

Project Number
Issued for
Date
Scale AS NOTED
Drawn

3A-R-304

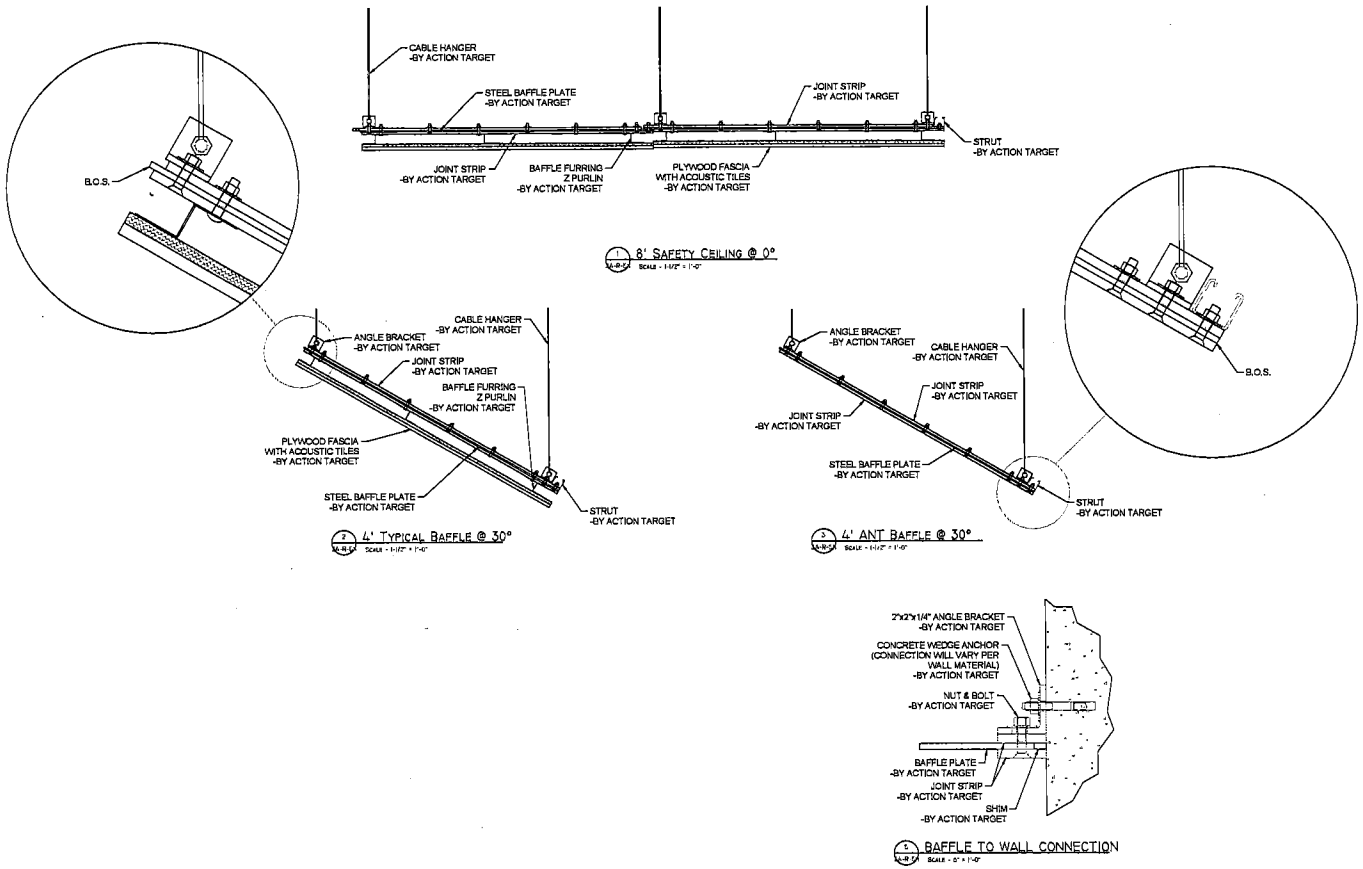

CLIENT

MONTGOMERY COUNTY
MARYLAND
DEPARTMENT OF GENERAL SERVICES
OFFICE OF SPECIAL PROJECTS

101 MONROE STREET, 4TH FLOOR
ROCKVILLE, MARYLAND 20850

PRIME AE

BAKER AND ASSOCIATES
3601 EISENHOWER AVE
ALEXANDRIA, VA 22304
(703) 960-8800

CO BUILTANT

VANDERWEIL
625 N. WASHINGTON ST.
ALEXANDRIA, VA 22314
(703) 683-9700

100% SUBMITTAL

REVISIONS		
NO.	DATE	DESCRIPTION

MONTGOMERY COUNTY MULTI-AGENCY SERVICE PARK

BAFFLE DETAILS

Project Number
Issued for
Date
Scale AS NOTED
Sheet 3A-R-511

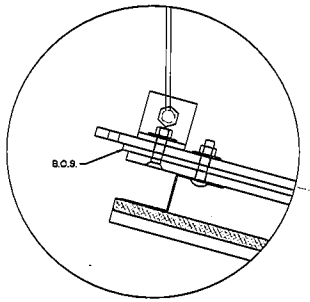

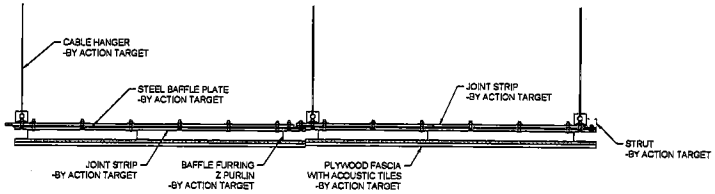

1 8' SAFETY CEILING @ 0°
SCALE = 1-1/2" = 1'-0"

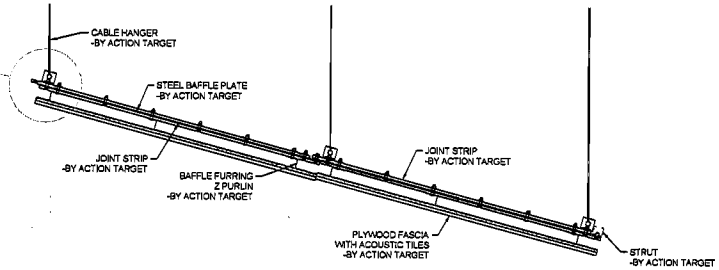

2 8' TYPICAL BAFFLE @ 15°
SCALE = 1-1/2" = 1'-0"

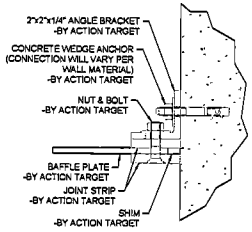

3 BAFFLE TO WALL CONNECTION
SCALE = 0" = 1'-0"

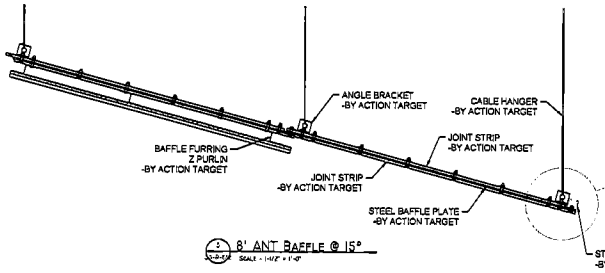

4 8' ANT BAFFLE @ 15°
SCALE = 1-1/2" = 1'-0"

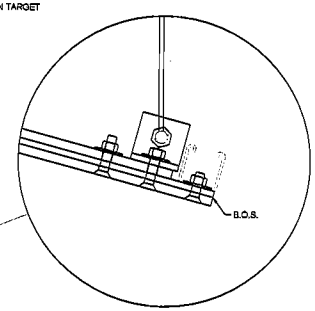

CLIENT

MONTGOMERY COUNTY
MARYLAND
DEPARTMENT OF GENERAL SERVICES
OFFICE OF SPECIAL PROJECTS
101 MONROE STREET, 9TH FLOOR
ROCKVILLE, MARYLAND 20850

PRIME A/E

BAKER AND ASSOCIATES
3601 EISENHOWER AVE
ALEXANDRIA, VA 22304
(703) 683-8300

CONSULTANT

VANDERWEIL
625 N. WASHINGTON ST.
ALEXANDRIA, VA 22314
(703) 683-9700

100% SUBMITTAL

NO.	DATE	REVISIONS DESCRIPTION

MONTGOMERY COUNTY MULTI-AGENCY SERVICE PARK

TACTICAL BAFFLE DETAILS

Project Number
Issued for
Date
Scale AS NOTED
Sheet 3A-R-512

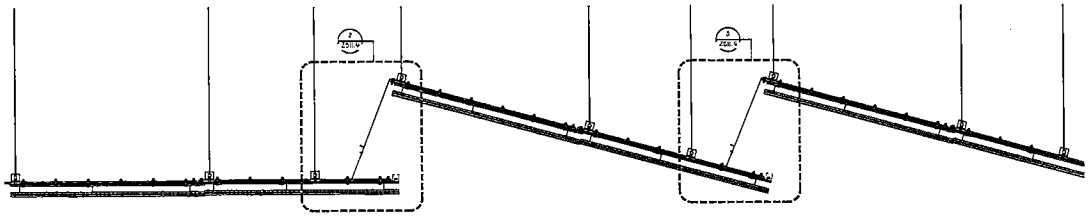

1 TACTICAL BAFFLE CLOSURE PANELS
3A-R-513 SCALE - 1" = 1'-0"

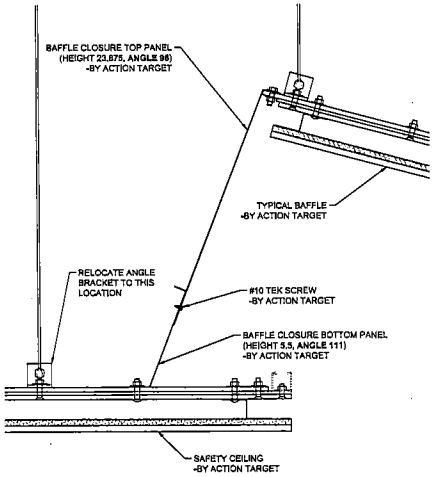

2 SAFETY CEILING CLOSURE PANEL
3A-R-513 SCALE - 3" = 1'-0"

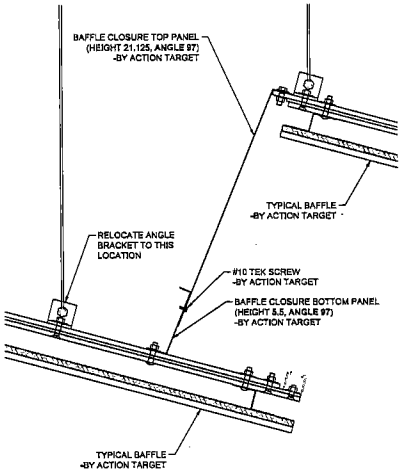

3 TYPICAL CLOSURE PANEL
3A-R-513 SCALE - 3" = 1'-0"

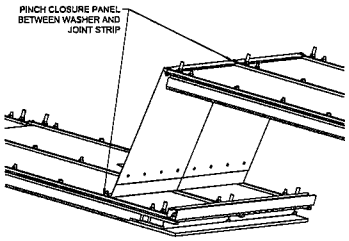

4 CLOSURE PANEL CONNECTION DETAIL
3A-R-513 SCALE - 1 1/2" = 1'-0"

CLIENT

MONTGOMERY COUNTY
MARYLAND
DEPARTMENT OF GENERAL SERVICES
OFFICE OF SPECIAL PROJECTS
101 MONROE STREET, 9TH FLOOR
ROCKVILLE, MARYLAND 20850

PRIME A/E

BAKER AND ASSOCIATES
3601 EISENHOWER AVE
ALEXANDRIA, VA 22304
(703) 960-8800

CONSULTANT

VANDERWEIL
625 N. WASHINGTON ST.
ALEXANDRIA, VA 22314
(703) 683-6700

100% SUBMITTAL

REVISIONS		
NO.	DATE	DESCRIPTION

MONTGOMERY COUNTY MULTI-AGENCY SERVICE PARK

TACTICAL BAFFLE CLOSURE PANEL DETAILS

Project Number

Issued for

Date

Scale AS NOTED

Dwg. No. 3A-R-513

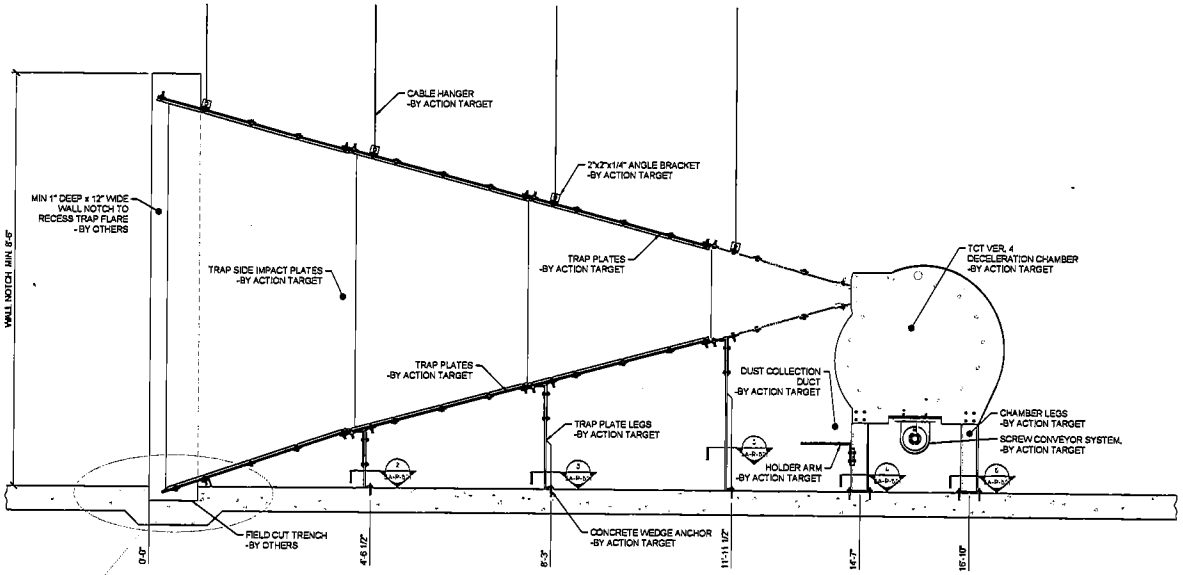

1 TOTAL CONTAINIMENT TRAP (4 UP 4 DOWN CONFIGURATION)
3A-R-521 SCALE - 1" = 1'-0"

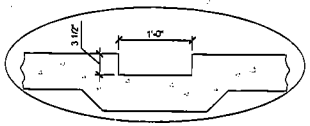

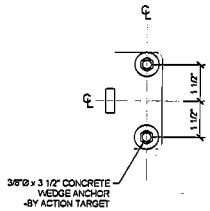

2 TRAP FRONT FOOT
3A-R-521 SCALE - 0" = 1'-0"

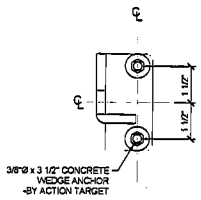

3 TRAP MIDDLE FOOT
3A-R-521 SCALE - 0" = 1'-0"

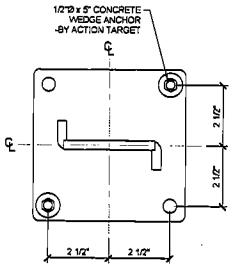

4 CHAMBER FRONT FOOT
3A-R-521 SCALE - 0" = 1'-0"

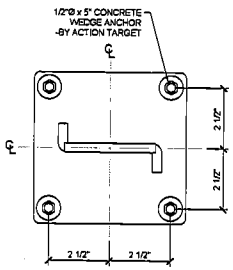

5 CHAMBER REAR FOOT
3A-R-521 SCALE - 0" = 1'-0"

CLIENT

MONTGOMERY COUNTY
MARYLAND
DEPARTMENT OF GENERAL SERVICES
OFFICE OF SPECIAL PROJECTS
101 MONROE STREET, 9TH FLOOR
ROCKVILLE, MARYLAND 20850

PRIME A/E

BAKER AND ASSOCIATES
3601 EISENHOWER AVE
ALEXANDRIA, VA 22304
(703) 960-8600

CONSULTANT

VANDERWEIL
525 N. WASHINGTON ST.
ALEXANDRIA, VA 22314
(703) 683-9700

100% SUBMITTAL

NO	DATE	REVISIONS DESCRIPTION

MONTGOMERY COUNTY MULTI-AGENCY SERVICE PARK

TCT TRAP DETAIL

Project Number

Issued for

Date

Scale
AS NOTED

Drawing No.
3A-R-521

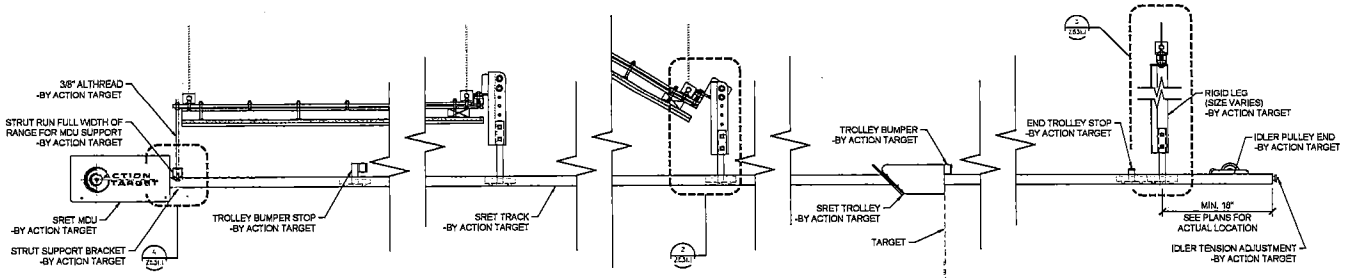

1 S-RET SECTION VIEW
SCALE - 1-1/2" = 1'-0"

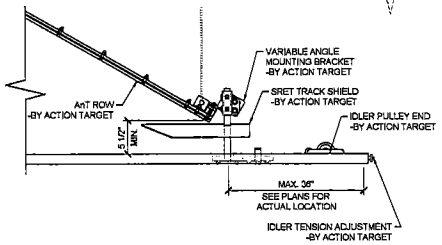

8 ALTERNATE END SECTION
SCALE - 1-1/2" = 1'-0"

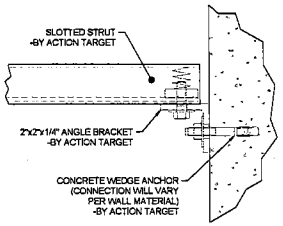

7 STRUT TO WALL CONNECTION
SCALE - 6" = 1'-0"

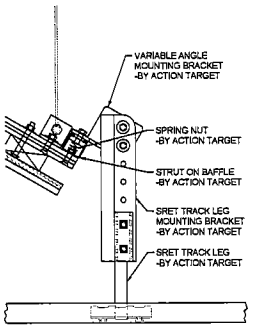

2 VARIABLE ANGLE RIGID CONNECTION
SCALE - 3" = 1'-0"

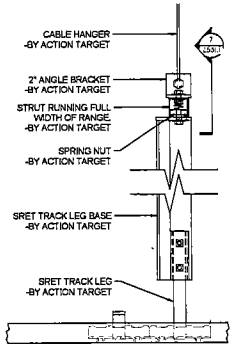

3 RIGID LEG DETAIL
SCALE - 3" = 1'-0"

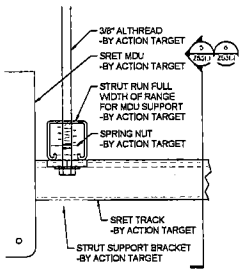

4 STRUT TO S-RET RAIL CONNECTION
SCALE - 6" = 1'-0"

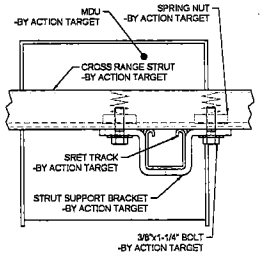

5 TRACK CONNECTION
SCALE - 6" = 1'-0"
LOCKING TOWARDS
SHOOTER

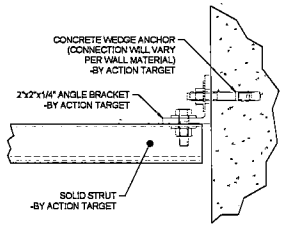

6 STRUT TO WALL CONNECTION
SCALE - 6" = 1'-0"

MONTGOMERY COUNTY
MARYLAND
DEPARTMENT OF GENERAL SERVICES
OFFICE OF CAPITAL PROJECTS
101 MONROE STREET, 9TH FLOOR
ROCKVILLE, MARYLAND 20850

PRIME A/E

BAKER AND ASSOCIATES
3601 EISENHOWER AVE
ALEXANDRIA, VA 22304
(703) 960-8800

CONSULTANT

VANDERWEIL
525 N. WASHINGTON ST.
ALEXANDRIA, VA 22314
(703) 683-9700

100% SUBMITTAL

NO.	DATE	REVISIONS DESCRIPTION

MONTGOMERY COUNTY MULTI-AGENCY SERVICE PARK

S-RET DETAILS

Project Number
Issued for
Date
Scale AS NOTED

3A-R-531

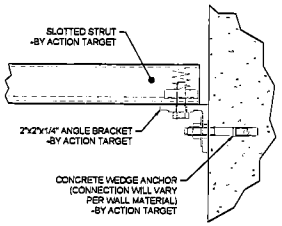

1 STRUT TO WALL CONNECTION
3A-R-532 SCALE - 6" = 1'-0"

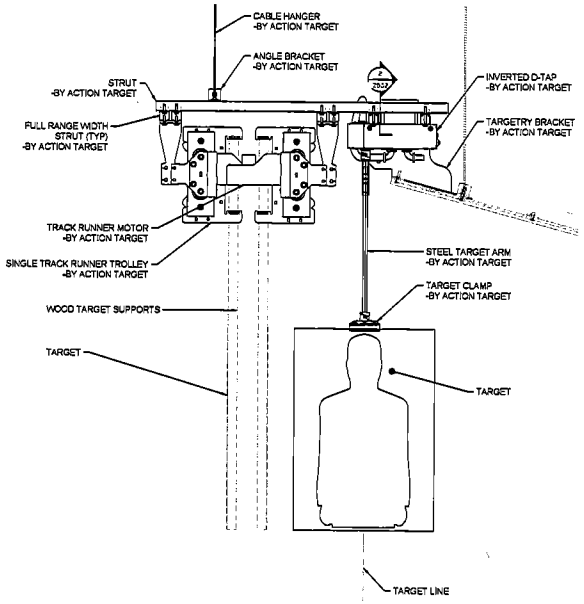

1 INVERTED TARGETRY SECTION OPTION A
3A-R-532 SCALE - 1½" = 1'-0"

CLIENT

MONTGOMERY COUNTY MARYLAND
DEPARTMENT OF GENERAL SERVICES
OFFICE OF SPECIAL PROJECTS
101 MONROE STREET, 6th FLOOR
ROCKVILLE, MARYLAND 20850

PROJECT

BAKER AND ASSOCIATES
3601 EISENHOWER AVE
ALEXANDRIA, VA 22304
(703) 660-8800

CONSULTANT

VANDERWEIL
625 N. WASHINGTON ST.
ALEXANDRIA, VA 22314
(703) 983-9700

100% SUBMITTAL

REVISIONS		
NO.	DATE	DESCRIPTION

MONTGOMERY COUNTY MULTI-AGENCY SERVICE PARK

INVERTED TARGETS DETAILS

Project Number
Issued for
Date
Scale AS NOTED
Drawing 3A-R-532

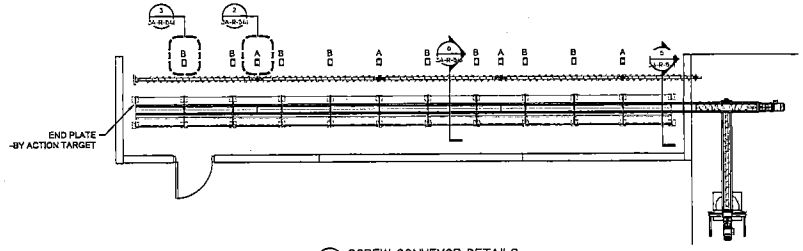

1 SCREW CONVEYOR DETAILS
SCALE - 1/4" = 1'-0"

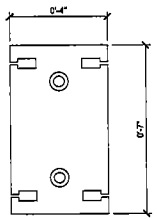

2 SCREW CONVEYOR ATTACHMENT PLATE (A)
SCALE - 0" = 1'-0"

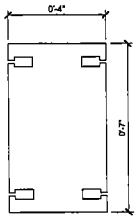

3 SCREW CONVEYOR HANGER PLATE (B)
SCALE - 0" = 1'-0"

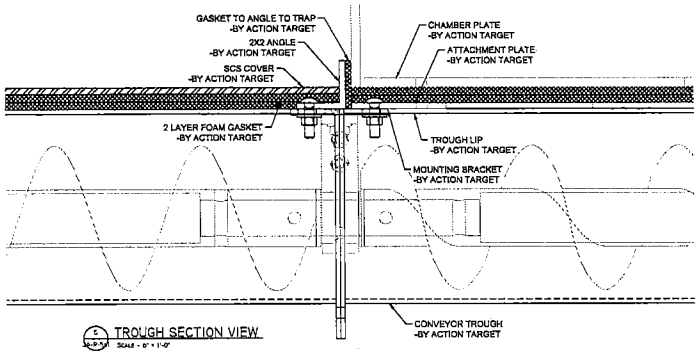

5 TROUGH SECTION VIEW
SCALE - 0" = 1'-0"

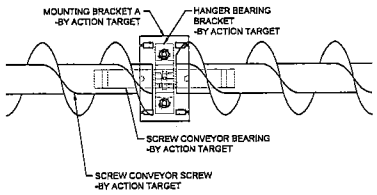

4 SCREW CONVEYOR CONNECTION DETAIL
SCALE - 2" = 1'-0"

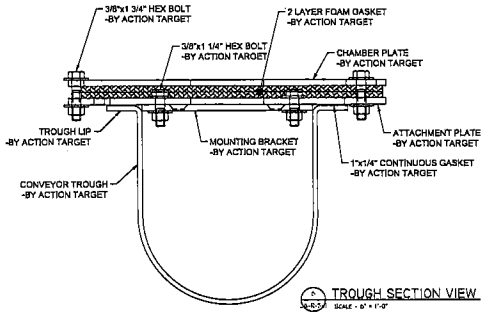

6 TROUGH SECTION VIEW
SCALE - 0" = 1'-0"

CLIENT

MONTGOMERY COUNTY MARYLAND
DEPARTMENT OF GENERAL SERVICES
OFFICE OF SPECIAL PROJECTS
101 MONROE STREET, 4TH FLOOR
ROCKVILLE, MARYLAND 20850

PRIME A/E

BAKER AND ASSOCIATES
3601 EISENHOWER AVE
ALEXANDRIA, VA 22304
(703) 960-6800

CONSULTANT

VANDERWEIL
625 N. WASHINGTON ST.
ALEXANDRIA, VA 22314
(703) 683-9700

100% SUBMITTAL

NO.	DATE	REVISIONS DESCRIPTION

MONTGOMERY COUNTY MULTI-AGENCY SERVICE PARK

SCREW CONVEYOR DETAILS

Project Number

Issued for

Date

Scale AS NOTED

Drawing 3A-R-541

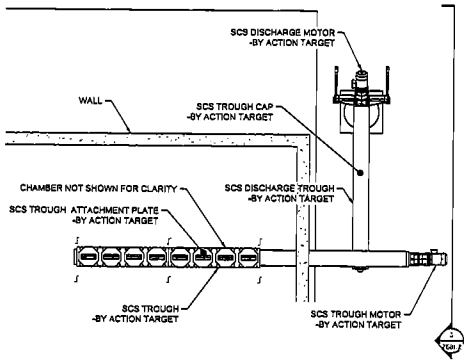

3 SCS REAR ENTRY PLAN VIEW
3A-R-542 SCALE - 1/2" = 1'-0"

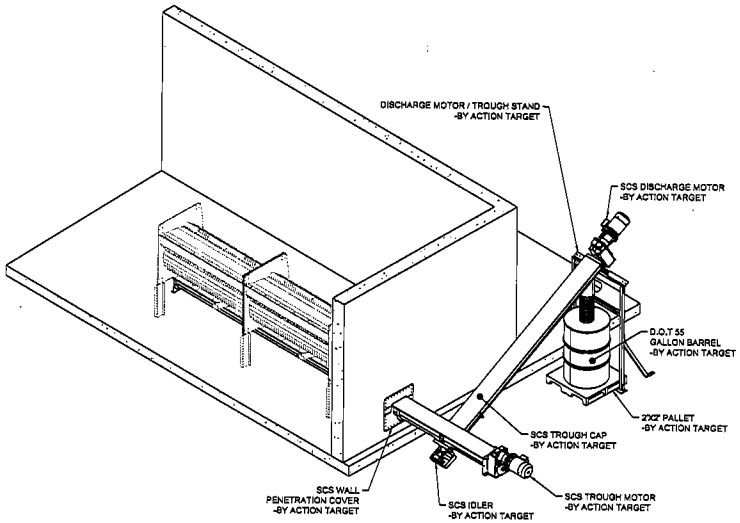

1 SCS REAR ENTRY ISO VIEW
3A-R-542 SCALE - 1/2" = 1'-0"

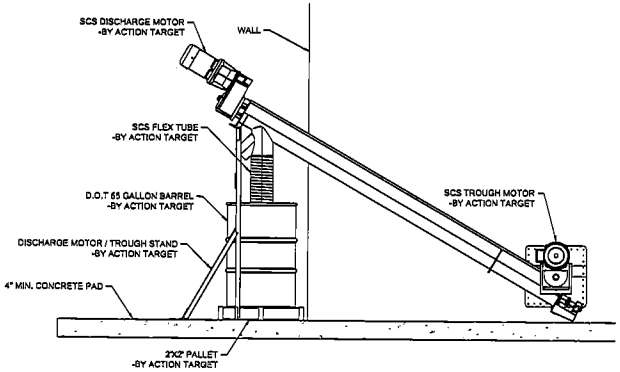

3 SCS REAR ENTRY SECTION VIEW
3A-R-542 SCALE - 3/4" = 1'-0"

CLIENT

MONTGOMERY COUNTY MARYLAND
DEPARTMENT OF GENERAL SERVICES
OFFICE OF SPECIAL PROJECTS
101 MONROE STREET, 14th FLOOR
ROCKVILLE, MARYLAND 20850

PRIME AE

BAKER AND ASSOCIATES
3601 EISENHOWER AVE
ALEXANDRIA, VA 22304
(703) 960-8800

CONSULTANT

VANDERWEIL
625 N. WASHINGTON ST.
ALEXANDRIA, VA 22314
(703) 683-9700

100% SUBMITTAL

NO.	DATE	REVISIONS DESCRIPTION

MONTGOMERY COUNTY MULTI-AGENCY SERVICE PARK

SCREW CONVEYOR SYSTEM DETAILS

Project Number
Issued for
Date
Scale AS NOTED
Dwg No. 3A-R-542

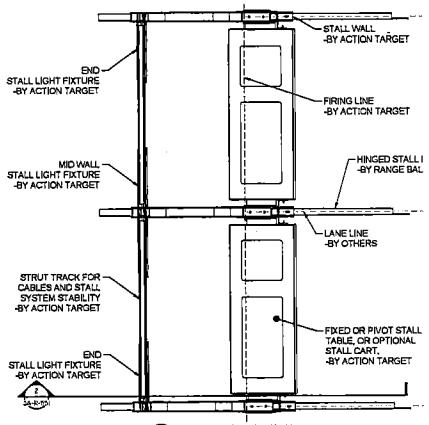

1 STALL PLAN VIEW
SCALE - 1" = 1'-0"

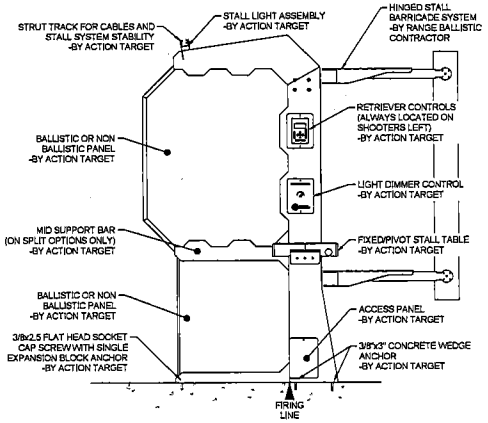

2 STALL SECTION VIEW
SCALE - 1" = 1'-0"

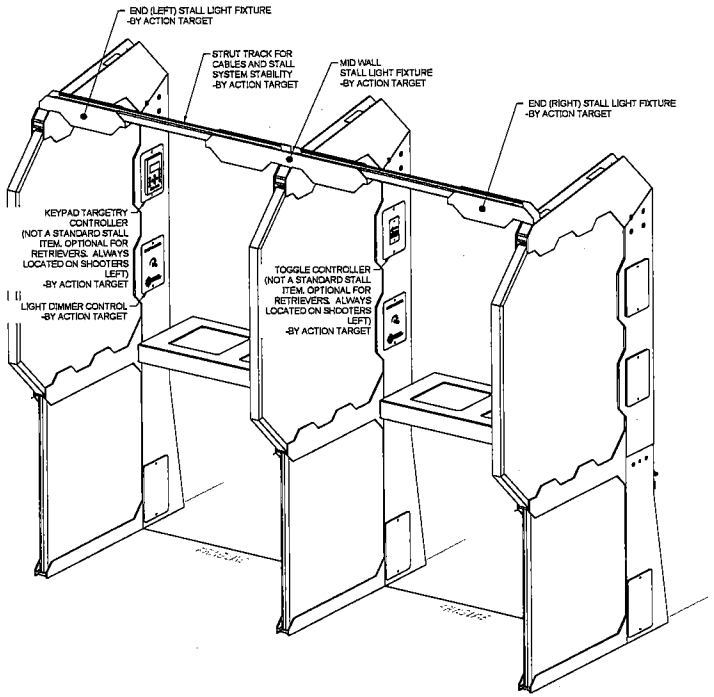

3 STALL ISO VIEW
SCALE - 1-1/2" = 1'-0"

MONTGOMERY COUNTY
MARYLAND
DEPARTMENT OF GENERAL SERVICES
OFFICE OF SPECIAL PROJECTS
101 MONROE STREET, 14TH FLOOR
ROCKVILLE, MARYLAND 20850
PRIME A/E
BAKER AND ASSOCIATES
3601 EISENHOWER AVE
ALEXANDRIA, VA 22304
(703) 960-8800
CONSULTANT
VANDERWEIL
625 N. WASHINGTON ST.
ALEXANDRIA, VA 22314
(703) 683-6700

100% SUBMITTAL

NO	DATE	REVISIONS DESCRIPTION

MONTGOMERY COUNTY MULTI-AGENCY SERVICE PARK

STALL DETAILS

Project Number
Issued for
Date
Scale AS NOTED
Sheet 3A-R-551

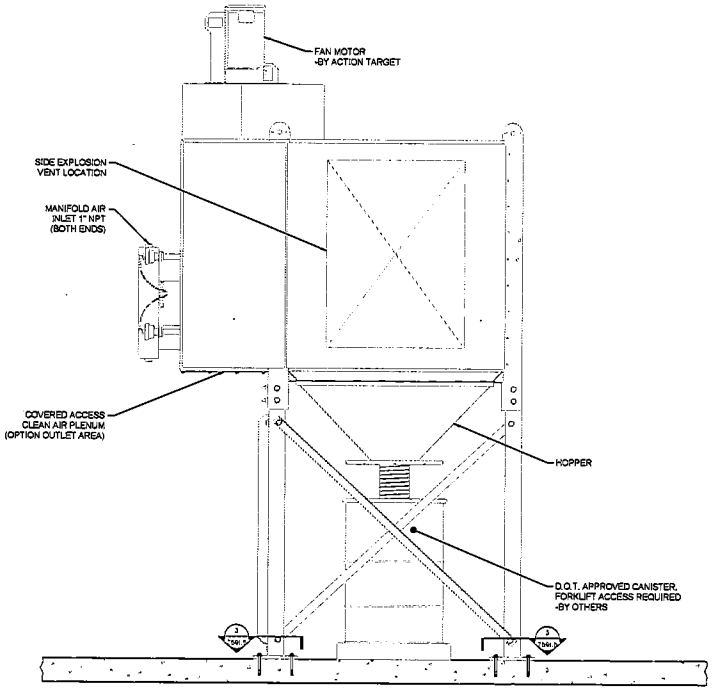

1 TORIT DCU SIDE DETAIL
3A-R-592 SCALE - 1" = 1'-0"

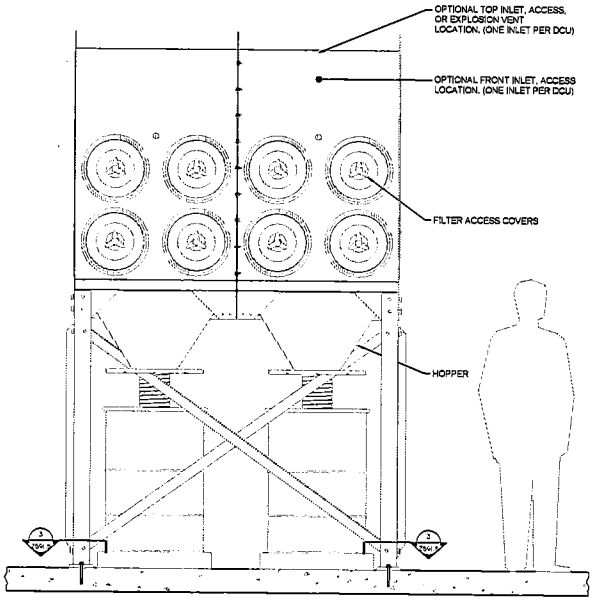

2 TORIT DCU FRONT DETAIL
3A-R-592 SCALE - 1" = 1'-0"

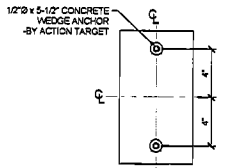

3 DCU LEG
3A-R-592 SCALE - 3" = 1'-0"

NOTE:
SIZE OF DUCT AND WALL PENETRATION TO BE DETERMINED.

NOTE:
ALL ELECTRICAL HOOK UPS, CONDUITS, AND WIRING TO BE PROVIDED BY OTHERS

CLIENT

MONTGOMERY COUNTY MARYLAND
DEPARTMENT OF GENERAL SERVICES
OFFICE OF SPECIAL PROJECTS
101 MONROE STREET, 9TH FLOOR
ROCKVILLE, MARYLAND 20850

PRIME A/E

BAKER AND ASSOCIATES
3601 EISENHOWER AVE
ALEXANDRIA, VA 22304
(703) 880-8800

CONSULTANT

VANDERWEIL
625 N. WASHINGTON ST.
ALEXANDRIA, VA 22314
(703) 683-9700

100% SUBMITTAL

REVISIONS		
NO.	DATE	DESCRIPTION

MONTGOMERY COUNTY MULTI-AGENCY SERVICE PARK

TORIT DCU DETAILS

Project Number
Issued for
Date
Scale AS NOTED
Sheet # 3A-R-592

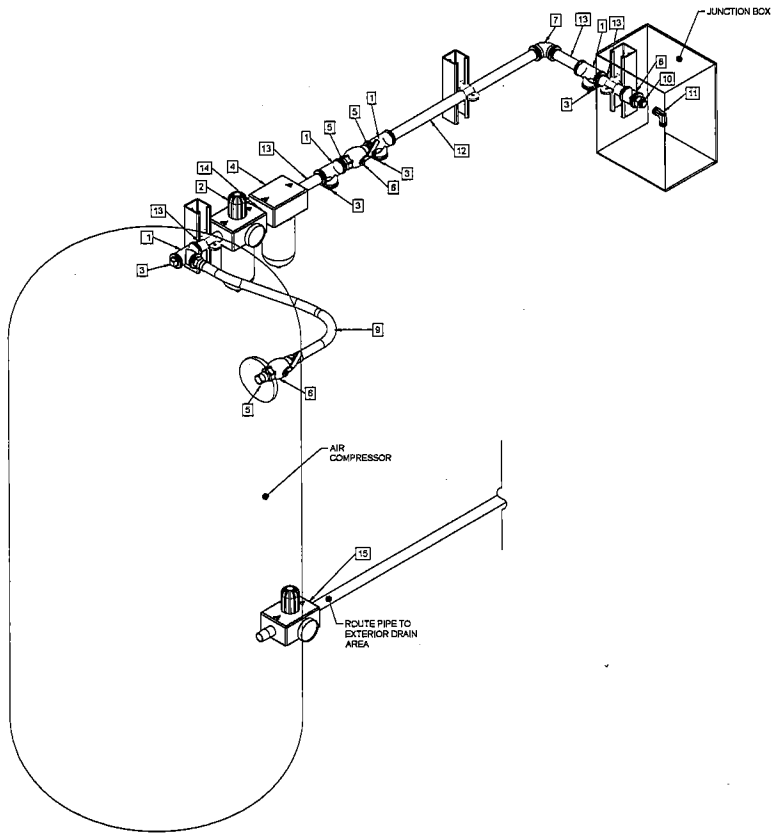

1 TORIT DCU SIDE DETAIL
3A-R-597 SCALE - 0" = 1'-0"

PARTS LIST		
ITEM	QTY	DESCRIPTION
1	4	PIPE TEE 1/2" NPT X 1/2" NPT X 1/2" NPT
2	1	AIR REGULATOR W/SEPARATOR 1/2" NPT
3	4	PIPE PLUG 1/2" NPT
4	1	AIR WATER SEPARATOR 1/2" NPT
5	3	PIPE NIPPLE CLOSE 1/2" NPT
6	2	BALL VALVE 1/2" NPT-F X 1/2" NPT-F
7	1	PIPE ELBOW 1/2" NPT-F X 1/2" NPT-F
8	1	PIPE COUPLER 1/2" NPT
9	1	SNUBBER HOSE ASSM W/UNION
10	1	AIR STRAIGHT 1/2" TUBE TO 1/2" NPT-M
11	1	AIR ELBOW 1/2" TUBE TO 1/2" TUBE
12	1	PIPE 18" X 1/2" NPT
13	4	PIPE NIPPLE 4" X 1/2" NPT
14	1	PIPE NIPPLE 2" X 1/2" NPT
15	1	AUTO ELECTRIC DRAIN VALVE

CLIENT

MONTGOMERY COUNTY MARYLAND
DEPARTMENT OF GENERAL SERVICES
OFFICE OF SPECIAL PROJECTS
101 MONROE STREET, 11TH FLOOR
ROCKVILLE, MARYLAND 20850

PRIME A/E

BAKER AND ASSOCIATES
3601 EISENHOWER AVE
ALEXANDRIA, VA 22304
(703) 960-8800

CONSULTANT

VANDERWEIL
625 N. WASHINGTON ST.
ALEXANDRIA, VA 22314
(703) 683-8700

100% SUBMITTAL

REVISIONS

NO.	DATE	DESCRIPTION

MONTGOMERY COUNTY MULTI-AGENCY SERVICE PARK

AIR COMPRESSOR DETAILS

Project Number

Issued for

Date

Scale AS NOTED

Sheet 3A-R-597

NOTE:
1. SEE 3A-R-728 FOR ELECTRICAL SCHEDULE FOR THIS RANGE

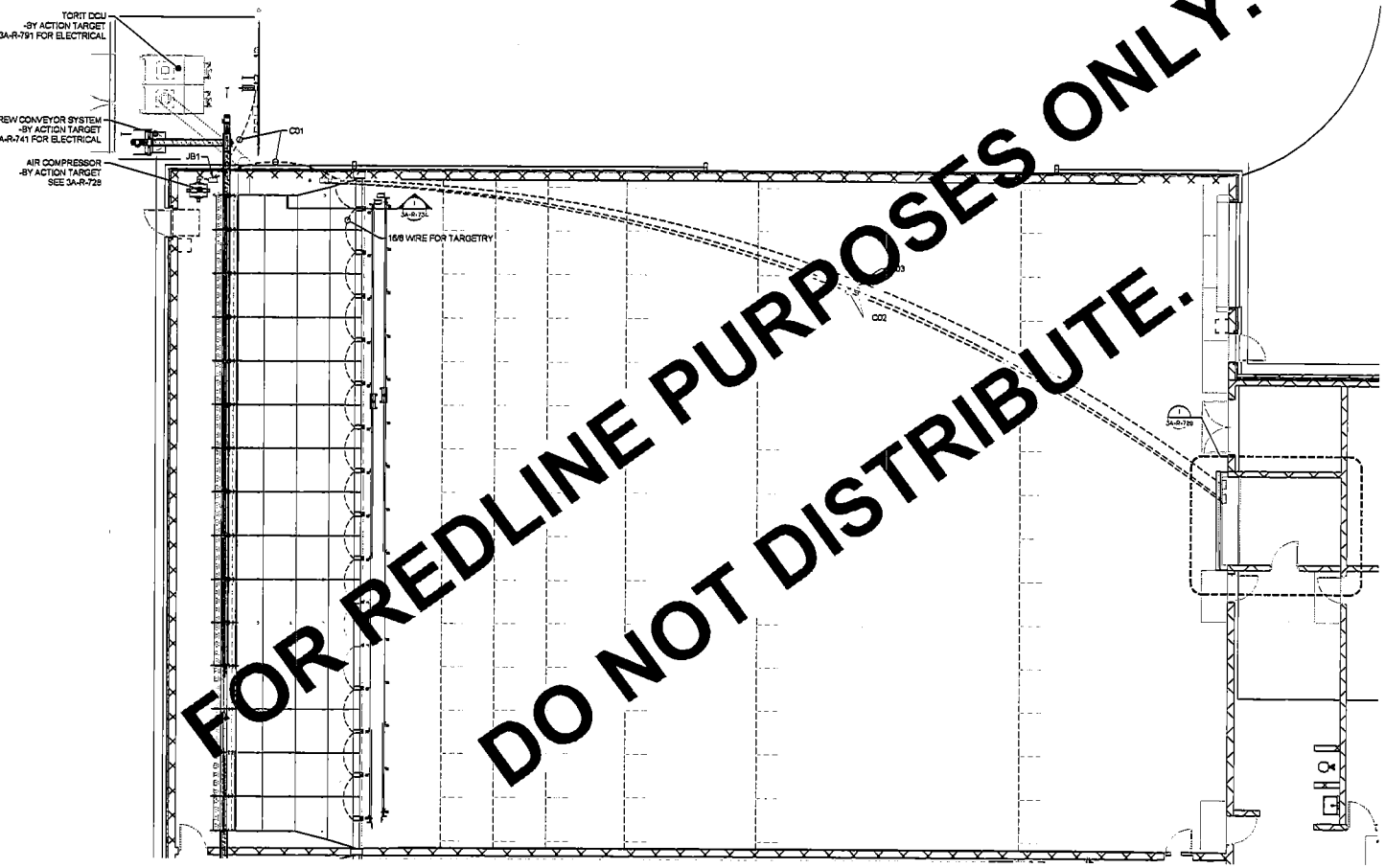

1 RANGE PLAN
3A-R-701 SCALE - 3/16" = 1'-0"

FOR REDLINE PURPOSES ONLY.
DO NOT DISTRIBUTE.

CLIENT

MONTGOMERY COUNTY
MARYLAND
DEPARTMENT OF GENERAL SERVICES
OFFICE OF SPECIAL PROJECTS
101 MONROE STREET, 9TH FLOOR
ROCKVILLE, MARYLAND 20850

PRIME A.E.

BAKER AND ASSOCIATES
2601 EISENHOWER AVE
ALEXANDRIA, VA 22304
(703) 960-5800

CO SULTANT

VANDERWEIL
525 N. WASHINGTON ST.
ALEXANDRIA, VA 22314
(703) 683-9700

100% SUBMITTAL

REVISIONS

NO.	DATE	DESCRIPTION

MONTGOMERY COUNTY MULTI-AGENCY SERVICE PARK

RANGE 1 ELECTRICAL

Project Number
Issued for
Date
Scale AS NOTED
Sheet 3A-R-701

ELECTRICAL DIAGRAM KEY

ITEM	QTY	PHASE	VOLTS	HP/AMP	DESCRIPTION
CKT	3	1	120	20	DEDICATED SERVICE SWITCH
RCP	4				DEDICATED DUAL RECEPTACLE (FOR TARGETS)
RCP4	2				DUAL RECEPTICAL (FOR LIGHTS)
		0	0		
	PROVIDED AND INSTALLED BY OTHERS			NON-SHADED	BY ACTION TARGET

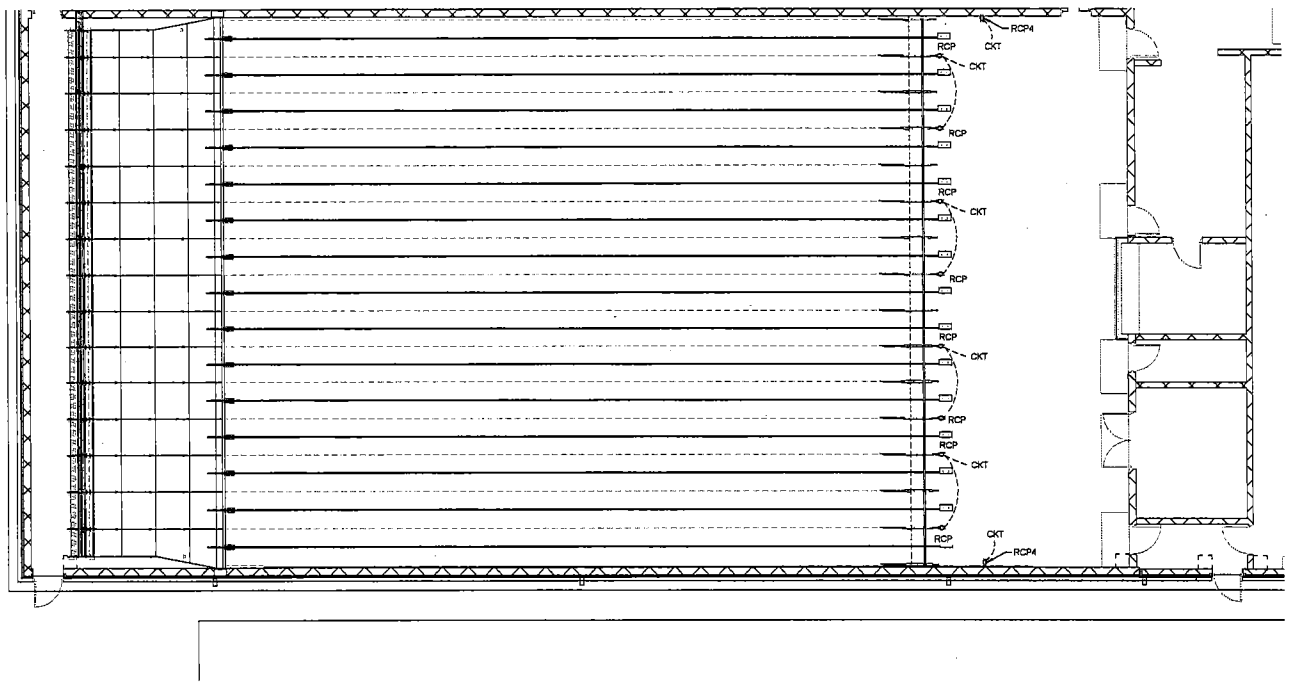

1 RANGE PLAN
3A-R-702 SCALE - 3/16" = 1'-0"

CLIENT

MONTGOMERY COUNTY MARYLAND
DEPARTMENT OF GENERAL SERVICES
OFFICE OF OPERAL PROJECTS
101 MONROE STREET, 9TH FLOOR
ROCKVILLE, MARYLAND 20850

PRIME AE

BAKER AND ASSOCIATES
3801 EISENHOWER AVE
ALEXANDRIA, VA 22304
(703) 960-8800

CONSULTANT

VANDERWEIL
625 N. WASHINGTON ST.
ALEXANDRIA, VA 22314
(703) 683-9700

100% SUBMITTAL

REVISIONS		
NO.	DATE	DESCRIPTION

MONTGOMERY COUNTY MULTI-AGENCY SERVICE PARK

RANGE 2 ELECTRICAL

Project Number
Issued for
Date
Scale AS NOTED
Sheet # 3A-R-702

COMPRESSOR ELECTRICAL DIAGRAM KEY

ITEM	QTY	PHASE	VOLTS	HP/AMP	DESCRIPTION
AC	1	1	230VAC	5HP	AIR COMPRESSOR
EDR	1				AUTO ELECTRIC DRAIN VALVE
CKT1	[illegible]	[illegible]	230VAC	20AMP	DEDICATED CIRCUIT FOR AIR COMPRESSOR
CKT2	[illegible]	[illegible]	120VAC	20AMP	DEDICATED CIRCUIT FOR AUTO ELECTRIC DRAIN VALVE
RCP1	[illegible]	[illegible]	[illegible]	[illegible]	DEDICATED RECEPTACLE FOR AIR COMPRESSOR
RCP2	[illegible]	[illegible]	[illegible]	[illegible]	DEDICATED RECEPTACLE FOR AUTO ELECTRIC DRAIN VALVE
	PROVIDED AND INSTALLED BY OTHERS			NON-SHADED	BY ACTION TARGET

NOTE:
1. VIEWS SHOWN ARE REPRESENTATION OF GENERIC CONTROL ROOM. ACTUAL LAYOUT MAY VARY.
2. ACTION TARGET RECOMMENDS INSTALLATION OF COMPRESSOR IN VENTILATED, NON-OCCUPIED ROOM.

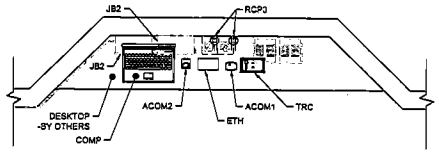

2 CONTROL ROOM - PLAN VIEW
SCALE - 3/4" = 1'-0"

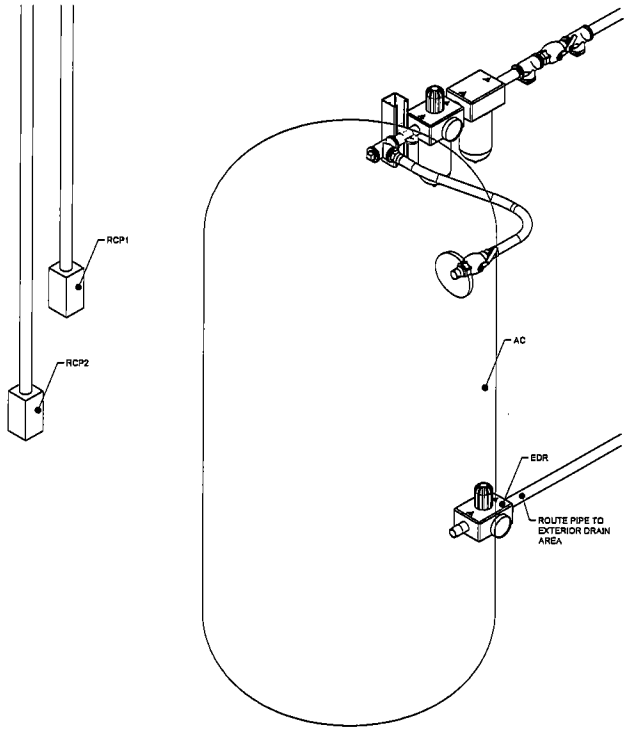

3 COMPRESSOR ELECTRICAL - ISO VIEW
SCALE - 3/4" = 1'-0"

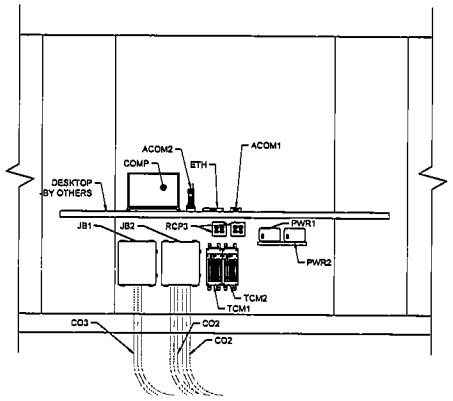

4 CONTROL ROOM - SECTION VIEW
SCALE - 3/4" = 1'-0"

ELECTRICAL DIAGRAM KEY

ITEM	QTY	PHASE	VOLTS	HP/AMP	DESCRIPTION
RCP1	1	3	208/240/480	[illegible]	DEDICATED SERVICE OUTLET (FOR COMPRESSOR)
RCP2	2	1	120	20AMP	DEDICATED SERVICE OUTLET (FOR TRACK RUNNER)
RCP3	2	[illegible]	120	20AMP	DEDICATED SERVICE OUTLET FOR ACTION TARGET EQUIPMENT
JB1	[illegible]	[illegible]	[illegible]	[illegible]	1-BOX (10x8x4) NEMA TYPE 12/13 ENCLOSURE
JB2	[illegible]	[illegible]	[illegible]	[illegible]	3-BOX (10x12x6) NEMA TYPE 12/13 ENCLOSURE
AC	1				AIR COMPRESSOR w/ WATER SEPARATOR
AC1	1				AUTO DRAIN
AC3	1				SEPARATOR & DRAIN
COMP	1				COMPUTER w/ SMART RANGE 2000 (LAPTOP)
ACOM1	1				AIR COMMAND
ACOM2	1				AIR COMMAND WIRELESS CONTROL
ETH	1				6 PIN ETHERNET SWITCH
PWR1	1			40AMP	POWER SUPPLY (FOR TARGETRY)
PWR2	1			15AMP	POWER SUPPLY (FOR TCM)
CO1	2				1" CONDUIT
					w/ ½" POLY AIRLINE
CO2	2				2" CONDUIT
					w/ (8) 16-6ga WIRES
CO3	[illegible]				1" CONDUIT
					DATA CABLE

PROVIDED AND INSTALLED BY OTHERS — NON-SHADED — BY ACTION TARGET

CLIENT

MONTGOMERY COUNTY MARYLAND
DEPARTMENT OF GENERAL SERVICES
OFFICE OF SPECIAL PROJECTS
101 MONROE STREET, 9TH FLOOR
ROCKVILLE, MARYLAND 20850
PRIME AE

BAKER AND ASSOCIATES
3601 EISENHOWER AVE
ALEXANDRIA, VA 22304
(703) 980-8800
CIVIL CONSULTANT

VANDERWEIL
625 N. WASHINGTON ST.
ALEXANDRIA, VA 22314
(703) 683-9700

100% SUBMITTAL

REVISIONS

NO	DATE	DESCRIPTION

MONTGOMERY COUNTY MULTI-AGENCY SERVICE PARK

CONTROL ROOM LAYOUT

Project Number
Issued for
Date
Scale AS NOTED
Sheet # 3A-R-728

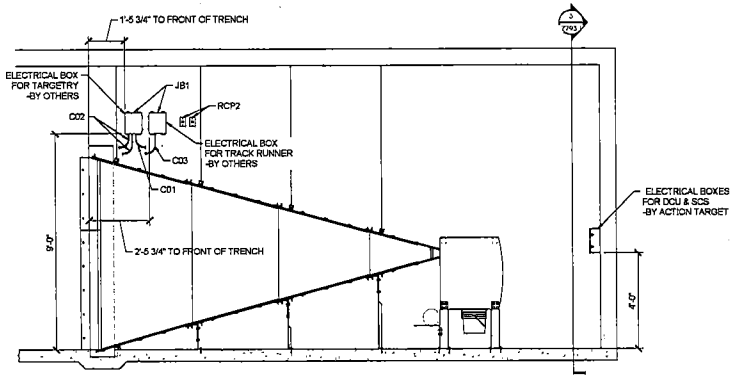

1 4X4 TCT ELECTRICAL BOX LOCATIONS
SCALE - 1/2" = 1'-0"

NOTE:
SEE 3A-R-728 FOR ELECTRICAL LEGEND.

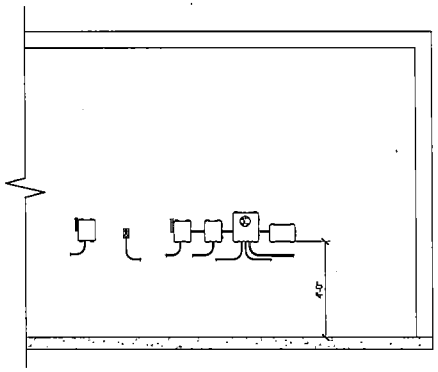

1 ELECTRICAL BOX LOCATIONS
SCALE - 1/2" = 1'-0"

CLIENT

MONTGOMERY COUNTY MARYLAND
DEPARTMENT OF GENERAL SERVICES
OFFICE OF SPECIAL PROJECTS
101 MONROE STREET, 9TH FLOOR
ROCKVILLE, MARYLAND 20850

PRIME A/E

BAKER AND ASSOCIATES
3601 EISENHOWER AVE
ALEXANDRIA, VA 22304
(703) 960-8800

CONSULTANT

VANDERWEIL
525 N. WASHINGTON ST.
ALEXANDRIA, VA 22314
(703) 683-8700

100% SUBMITTAL

NO.	DATE	REVISIONS DESCRIPTION

MONTGOMERY COUNTY MULTI-AGENCY SERVICE PARK

ELECTRICAL BOX DETAILS

Project Number
Issued for
Date
Scale AS NOTED
Drawing No. 3A-R-734

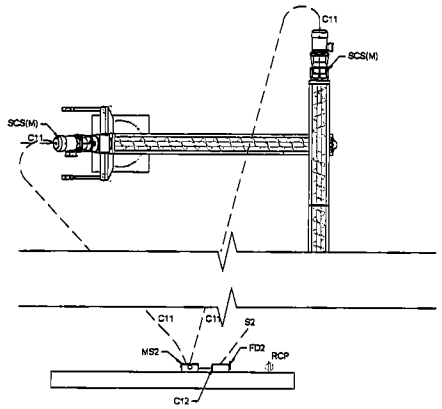

ELECTRICAL DIAGRAM KEY

ITEM	QTY	PHASE	VOLTS	HP/AMP	DESCRIPTION
FD2	1	3	208/240/480		FUSED DISCONNECT - BY OTHERS (FOR SCREW CONVEYOR SYSTEM)
S2	1	3	208/240/480	SCS(M)	SERVICE - BY OTHERS (FOR SCS MOTOR TO FUSED DISCONNECT)
C11	2	1			CONDUIT W/ (5) 10 GA. WIRES - BY OTHERS
C12	1				1" CONDUIT
MS2	1		0		DUAL MOTOR STARTER - BY ACTION TARGET (FOR SCS)
SCS(M)	3	3	208/240/480	3HP	SCREW CONVEYOR MOTOR - BY ACTION TARGET
RCP	1	1	120		SERVICE FOR MOTOR STARTER
S-M	PROVIDED AND INSTALLED BY OTHERS			NON-UH-CEE	BY ACTION TARGET

SCREW CONVEYOR ELECTRICAL
SCALE - 3/4" = 1'-0"

CLIENT

MONTGOMERY COUNTY MARYLAND
DEPARTMENT OF GENERAL SERVICES
OFFICE OF SPECIAL PROJECTS

101 MONROE STREET, 8TH FLOOR
ROCKVILLE, MARYLAND 20850

PRIME AE

BAKER AND ASSOCIATES
3601 EISENHOWER AVE
ALEXANDRIA, VA 22304
(703) 960-6800

CONSULTANT

VANDERWEIL
825 N. WASHINGTON ST.
ALEXANDRIA, VA 22314
(703) 683-9700

100% SUBMITTAL

REVISIONS		
NO.	DATE	DESCRIPTION

MONTGOMERY COUNTY MULTI-AGENCY SERVICE PARK

SCREW CONVEYOR ELECTRICAL DETAILS

Project Number
Issued by
Date
Scale AS NOTED
Sheet 3A-R-741

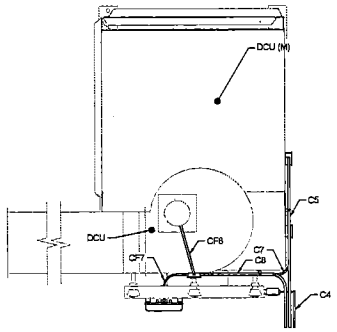

1 TOP VIEW
3A-R-791 SCALE - 3/4" = 1'-0"

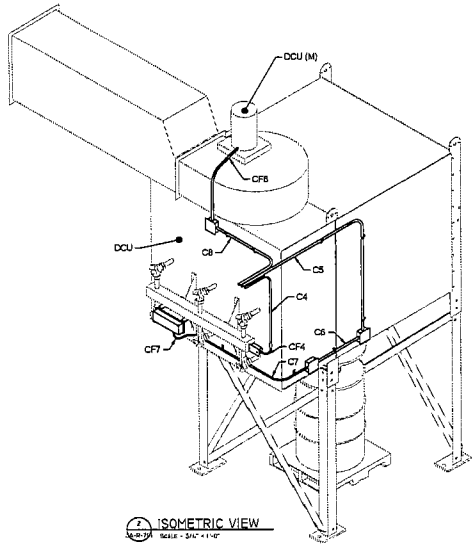

2 ISOMETRIC VIEW
3A-R-791 SCALE - 3/4" = 1'-0"

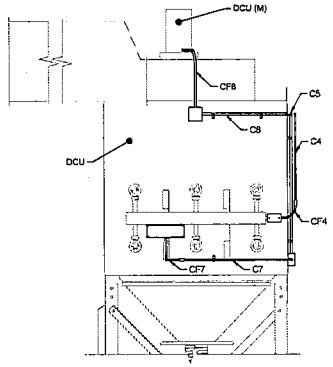

3 REAR VIEW
3A-R-791 SCALE - 3/4" = 1'-0"

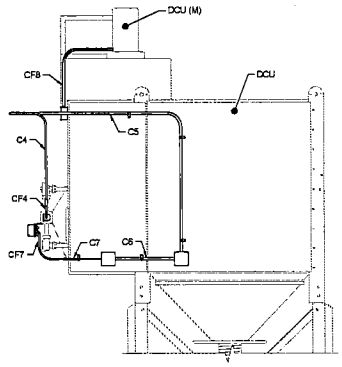

4 SIDE VIEW
3A-R-791 SCALE - 3/4" = 1'-0"

NOTE:
MOTOR HORSE POWER PROVIDED, AMPERAGE TO BE DETERMINED BY OTHERS.

ELECTRICAL DIAGRAM KEY

ITEM	QTY	PHASE	VOLTS	HP/AMP	DESCRIPTION
RCP1	1	3	208/240/480		DEDICATED SERVICE OUTLET (FOR COMPRESSOR)
AC	1				AIR COMPRESSOR w/ WATER SEPARATOR
AC3	1				SEPARATOR & DRAIN
DCU	1				DUST COLLECTION UNIT
DCU (M)	1	3	208/240/480	15HP	DCU MOTOR
S	1	3	208/240/480	DCU (M)	SERVICE (FOR DCU MOTOR TO FUSED DISCONNECT)
MS	1			DCU (M)	MOTOR STARTER (FOR DCU)
S/S	1				START / STOP SWITCH (LOCATED AT DCU MOTOR)
PB	1				PHOTOHELIC BOX
CB	1				CYCLER BOX
C2	1				CONDUIT W/ (3) 10GA. WIRES (TO DCU S/S)
C3	1		120	20AMP	SERVICE (FOR CYCLER [illegible])
C4	1				1/2" OR 3/4" CONDUIT
					W/ POLY AIRLINE
CF4	1				1/2" OR 3/4" FLEX CONDUIT
					W/ POLY AIRLINE
C5	1				3/4" CONDUIT TO DCU
					W/ (2) 1/4" VACUUM TUBES & (1) 18/6
C6	1				3/4" CONDUIT
					W/ (1) 1/4" AIRLINE & (1) 18/6
C7	1				1/2" CONDUIT
					W/ (1) 18/6
CF7	1				1/2" FLEX CONDUIT
					W/ (1) 18/6
C8	1				3/4" CONDUIT TO MOTOR STARTER
CF8	1				3/4" FLEX CONDUIT TO MOTOR STARTER
C9	3				1" CONDUIT

PROVIDED AND INSTALLED BY OTHERS | NOTE-ENCODED BY ACTION TARGET

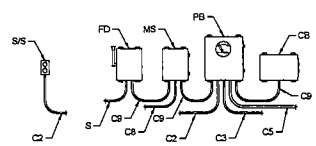

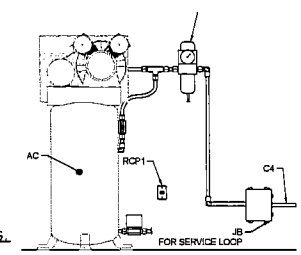

6 INDOOR/OUTDOOR CONFIG.
3A-R-791 SCALE - 3/4" = 1'-0"

CLIENT

MONTGOMERY COUNTY
MARYLAND
DEPARTMENT OF GENERAL SERVICES
OFFICE OF SPECIAL PROJECTS
101 MONROE STREET, 10TH FLOOR
ROCKVILLE, MARYLAND 20850

PRIME A/C

BAKER AND ASSOCIATES
3001 EISENHOWER AVE
ALEXANDRIA, VA 22304
(703) 960-8600

CO. CULT. ANT

VANDERWEIL
825 N. WASHINGTON ST.
ALEXANDRIA, VA 22314
(703) 683-9700

100% SUBMITTAL

REVISIONS		
NO.	DATE	DESCRIPTION

MONTGOMERY COUNTY MULTI-AGENCY SERVICE PARK

TORIT DCU ELECTRICAL DETAILS

Project Number
Issued by
Date
Scale AS NOTED
Sheet 3A-R-791