MONTGOMERY COUNTY, MARYLAND
DEPARTMENT OF TRANSPORTATION
TRAFFIC ENGINEERING AND OPERATIONS

MAY 2010

BRONZE-COLORED, RECTILINEAR, MEDIUM-CUTOFF, TYPE III , LUMINAIRES

1) PURPOSE

The purpose of these specifications is to provide minimum requirements for the design, manufacture, fabrication, finishing and delivery of decorative bronze-colored, Type III, medium-cutoff rectilinear streetlight luminaires. These luminaires are intended for use on a variety of streetlight poles at a mounting height of 25 feet in urban streetscape and rural areas. Any manufacturer, distributor or vendor who submits a bid shall agree to comply with these specifications and the attached drawings.

2) DESCRIPTION

Each street light luminaire include the following.

a) Lamp, as specified;
b) NEMA standard photoelectric control receptacle on the top cover of the luminaire with NEMA standard photocell;
c) All necessary hardware for side mounting on specified pole;
d) Side-mounting bracket are eight (8) to twelve (12) inches long and rectangular in cross section as specified under quantities required;
e) Flat, hard tempered glass lens;
f) Finish color shall be "National Park Service Brown", as per attachment entitled "Finishing Galvanized Steel and Aluminum Metals."

3) DESIGN CRITERIA

3.1) AASHTO Standards

The luminaire shall meet the requirements of the American Association of State Highway and Transportation Official (AASHTO), "Standard Specifications for Structural Supports for Highway Signs, Luminaires, and Traffic Signals," latest edition.

3.2 Shape and Minimum Size

The luminaire shall be rectangular in shape. The minimum size for the luminaire shall be 36.0 inches (sum of the luminaire's length plus width), when viewed from the side. The maximum allowable Effective Projected Area (EPA) for the luminaire and bracket arm shall be three (3.0) or less square feet.

The luminaire shall be of a suitable size to accommodate either a 150 watt or 250 watt high pressure sodium vapor (HPSV) ballast and lamp.

3.3 Wind Load

All components of the luminaires shall be designed to resist (at yield strength of the materials without permanent deflection or destruction), test loads equivalent to the calculated loads developed by the velocity pressure of at least an 80 MPH wind. A minimum safety factor of 1.82 on the yield strength shall be maintained.

3.4 Finish

All Visible components shall be finished to produce the appearance of a decorative "National Park Service Brown" color, as described in the attachment entitled "Finishing Galvanized Steel and Aluminum Metals." During the finishing process, all critical openings shall be plugged to prevent contamination of the threads or reduction of critical openings.

Other finishing techniques may be considered by Montgomery County. Complete documentation and specifications for any alternate finish must be submitted with the bid documents together with the results of an accelerated life-testing by an independent laboratory which certifies a minimum expected life of the alternate finish of twenty (20) years.

4) MATERIALS

4.1) Design Uniformity

These specifications are intended to produce a uniform system of hardware that will minimize the number of stock items that the County or its contractor(s) must maintain.

4.2) Housing

The housing shall consist of a water tight shell fabricated with either welded, overlapped seams, or with extrusions sealed with silicon seals. Cast aluminum door frames, to hold the flat tempered prismatic glass lens or a cover concealing the ballast, shall be affixed to the housing with full length aluminum piano hinges incorporating removable stainless steel hinge pins. All doors shall be fully gasketed with closed cell or solid neoprene gaskets. All doors shall be held closed with two quarter-turn captive fasteners and shall be restrained by captive stainless steel or brass chains.

4.3) Material

The luminaire housing shall be constructed of cast, extruded or 0.051 inch minimum sheet aluminum.

4.4) Castings

All castings used to complete the luminaire shall be clean and smooth with all details well defined and true to pattern.

4.5) Ballast

The ballast shall be tray mounted to facilitate easy removal and maintenance or conversion to a different ballast. All electrical connections shall be polarized and of plug-in design. The ballast shall be for a 150 watt HPSV bulb and shall be of a regulator or auto-regulator design. The ballast shall be delivered to receive nominal 120 volt AC current. The ballast assembly shall be completely accessible and removable without requiring access through the reflector assembly.

4.6) Lamp

The lamp shall be a ANSI code - S55SC-150 shall be provided (Mogul Base Socket).

4.7) Photoelectric Cell

The photoelectric cell shall be of the NEMA twist-lock type and shall be mounted in the top of the luminaire housing.

4.8) Reflector

The reflector shall be a one-piece formed aluminum sheet, finished with a "Alzak*R-5: or equivalent anodic process.

4.9) Bracket Arm

The bracket shall consist of an extruded rectangular aluminum section, 8.0 to 12.0 inches in length and long enough to permit mounting two luminaires at a 90° angle on any of the following types of poles:

a) The "Tall-Post Streetlight Pole" with an approximate diameter of 3.5 inches at a nominal 25 +/- feet mounting height (drawing attached)

b) A traffic signal pole with an approximate diameter of 9.5 inches at a 25 +/- feet mounting height.

c) A traffic signal pole with an approximate diameter of 5.25 inches at a 25 +/- feet mounting height.

d) A square tapered pole with an approximate dimension of 4.5 inches at a 25 +/- feet street light mounting height. Predrilled mounting bolt holes in poles are 9/16 inches large and 3.0 inches between centers. A 3/4 inchhole for wires is located between the bolt holes.

e) A rectangular tapered wood pole with approximate dimensions of 5 inches x 6 inches at a 25 +/- feet mounting height.

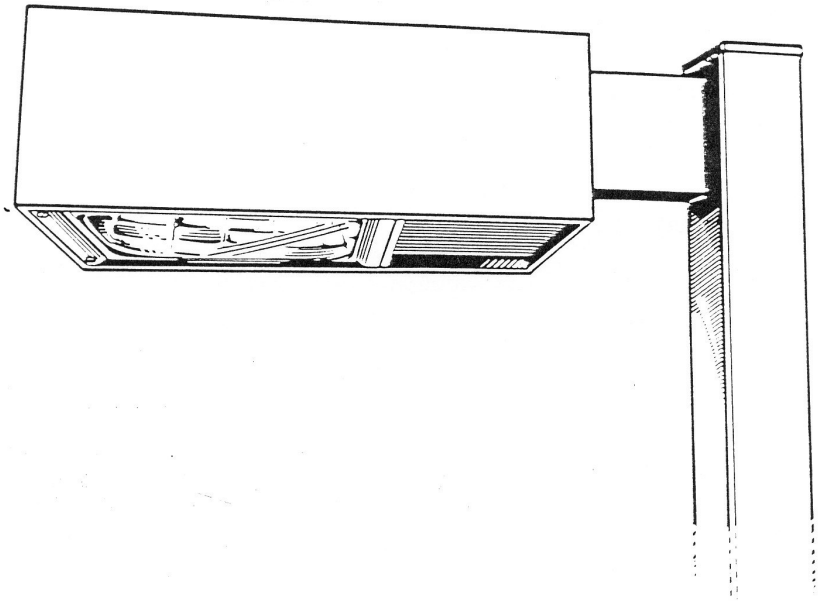

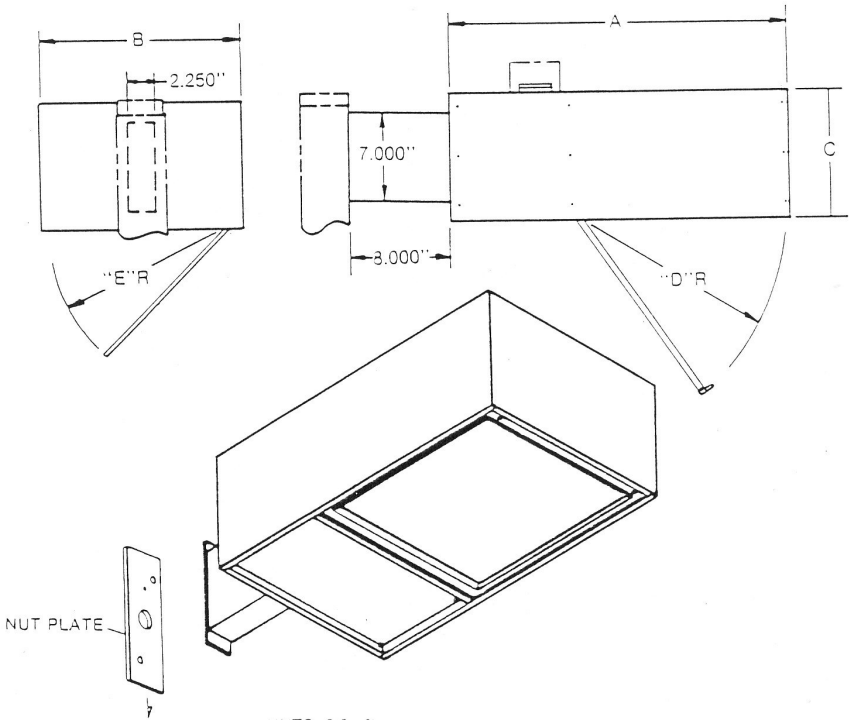
B
2.250"
"E"R
A
7.000"
C
8.000"
"D"R
NUT PLATE