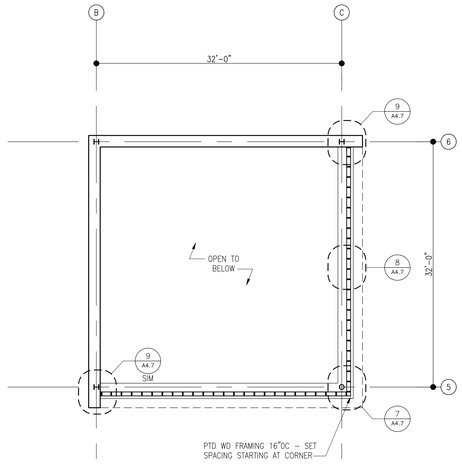

3 MONITOR PLAN
1/8" = 1'-0"
SEE ROOF PLAN FOR LOCATION

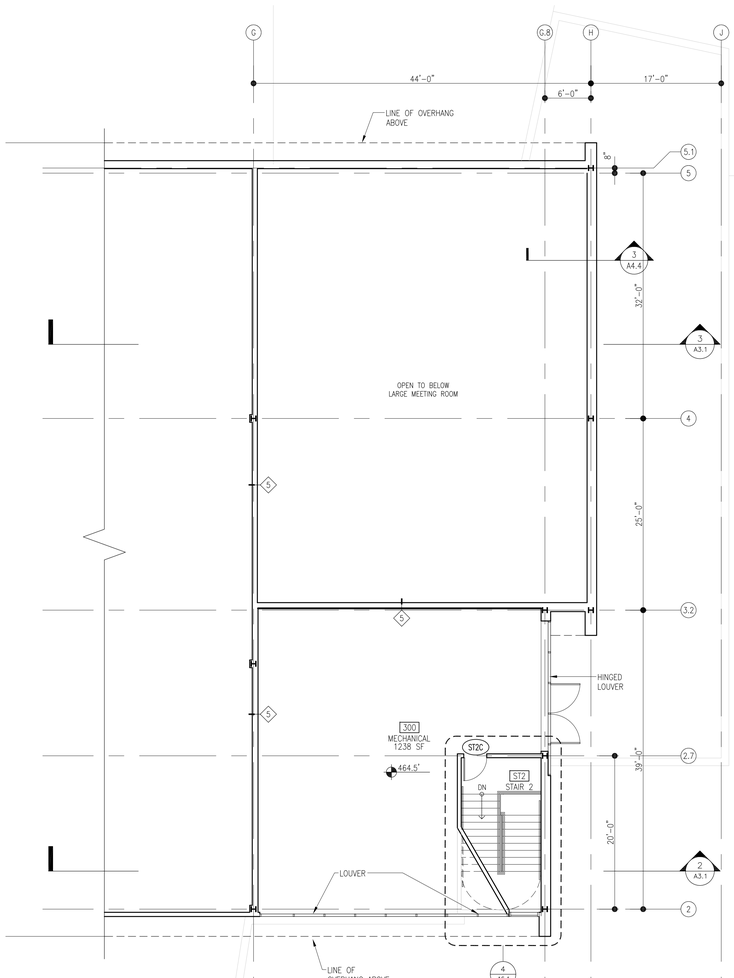

2 PLAN LEVEL 3
1/8" = 1'-0"

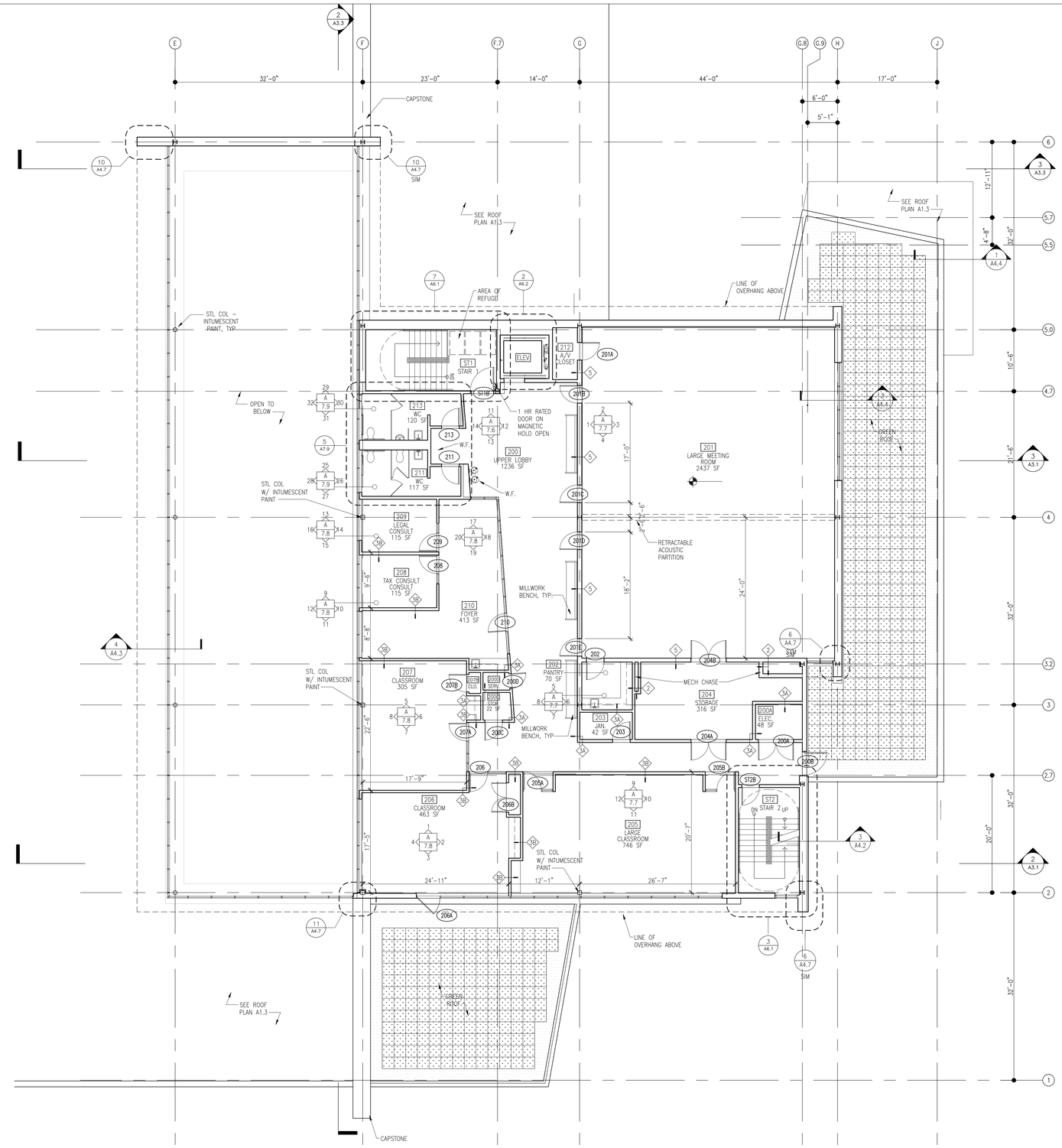

1 PLAN LEVEL 2
1/8" = 1'-0"

LEVEL 3 SQUARE FOOTAGE LEGEND	
SPACE	AREA
TOTAL GROSS	4,216 SF
CIRCULATION	156 SF
MECHANICAL	1,310 SF

LEVEL 2 SQUARE FOOTAGE LEGEND	
SPACE	AREA
TOTAL GROSS	7,925 SF
LOBBY AND CIRCULATION	1,665 SF
COMMUNITY MEETING SPACE	3,253 SF
GILCHRIST CENTER	1,511 SF
MECHANICAL	3 SF

REVISIONS

WR&A

ENGINEERS, ARCHITECTS AND PLANNERS
WHITMAN, REQUARDT AND ASSOCIATES LLP
801 SOUTH CAROLINE STREET
BALTIMORE, MD 21231

ASSOCIATE ARCHITECT
ANN BEHA ASSOCIATES
33 KINGSTON STREET
BOSTON, MA 02111

LANDSCAPE ARCHITECTS
MAHAN RYKIEL ASSOCIATES , INC
800 WYMAN PARK DRIVE, SUITE 100
BALTIMORE, MD 21211

STRUCTURAL ENGINEERS
RESTL DESIGNERS, INC
702 RUSSEL AVENUE, SUITE 400
GAITHERSBURG, MD 20877

CIVIL ENGINEERING
CONSTELLATION DESIGN GROUP
57 W TIMONIUM RD, SUITE 200
TIMONIUM, MD 21093

ELECTRICAL ENGINEERING
DIVERSIFIED ENGINEERING, INC
914 SILVER SPRING AVE, SUITE 208
SILVER SPRING, MD 20910

COST CONSULTANTS
DMS INTERNATIONAL
550 STERETT PLACE , SUITE 300
COLUMBIA, MD 21044

TELECOMMUNICATIONS
UNLIMITED SYSTEMS SUPPORT, INC
3735 PARKFIELD ROAD
PIKESVILLE, MD 21208

INTERIOR DESIGN
RONRER STUDIO
611 CATHEDRAL STREET
BALTIMORE, MD 21201

IFB/RFP #

DEPARTMENT OF GENERAL SERVICES DIVISION
OF BUILDING DESIGN AND CONSTRUCTION

101 MONROE STREET, ELEVENTH FLOOR
ROCKVILLE, MARYLAND 20850

GAITHERSBURG LIBRARY

18330 MONTGOMERY VILLAGE AVENUE
GAITHERSBURG, MARYLAND 20879

Project Address

GRAPHIC SCALE

ISSUED FOR:
- [x] PRELIMINARY/PROGRESS (NOT FOR CONST.)
- [ ] PRICING ONLY
- [ ] PERMIT
- [ ] CONSTRUCTION DOCUMENTS

SEAL

DESIGN	
DRAWN	
APPROVED	
SCALE	1/8" = 1'-0"
DATE	MARCH 11, 2009
CAD FILE	GL_A1.2_PLAN_2ND_&_3RD.dwg
PROJECT NO.	90117-001

DRAWING TITLE

SECOND AND THIRD FLOOR PLANS/MONITOR PLAN

DRAWING NO.

A1.2

PLOT DATE: 1/9/2009 1:24:30 PM PAGE SETUP: ---- PLOT STYLE: ABA EXTRA THIN PENS.CTB PAPER SIZE:LEDGER
FILENAME: F:\ABA\PROJECTS\GAITHERSBURG LIBRARY\AUTOCAD_CURRENT\FLOPSHEETS\GL_A1.2_PLAN_2ND_&_3RD.DWG