DEPARTMENT OF GENERAL SERVICES

Isiah Leggett
County Executive

David E. Dise
Director

MONTGOMERY COUNTY MARYLAND
SOLICITATION ADDENDUM # 2
IFB # 1005807
06/22/2011

FOR THE PROCUREMENT OF: **Parking Garage No. 5, Structural Repairs & Restoration.**

****

ALL SOLICITATION ADDENDUMS MUST BE ACKNOWLEDGED BY THE OFFEROR PRIOR TO THE HOUR AND DATE SPECIFIED IN THE SOLICITATION (AS AMENDED) FOR RECEIPT OF OFFERS. **FAILURE TO ACKNOWLEDGE AN ADDENDUM MAY BE CAUSE TO REJECT OFFER**.

DESCRIPTION OF ADDENDUM:

1. Change to the Terms and Conditions of Construction Contract.
2. Changes to the Performance Bond.
3. Revisions and Additions to Specification.
4. Clarifications.
5. Drawings.

THERE ARE NO OTHER CHANGES

THE SOLICITATION PROVISION ENTITLED "SOLICITATION ADDENDUMS" IS APPLICABLE TO THIS ADDENDUM. THE CHANGES SET FORTH BELOW ARE HEREBY INCORPORATED INTO THE ABOVE-CITED SOLICITATION. THE HOUR AND DATE SPECIFIED FOR RECEIPT OF **OFFER IS NOT EXTENDED.**

ISSUED BY: _____
David E. Dise, Director
Department of General Services

NAME OF OFFEROR: _____
(Type or print)

NAME AND TITLE OF PERSON AUTHORIZED TO SIGN: _____
(Type or Print)

OFFEROR'S SIGNATURE: _____ DATE _____

(collins)

Office of Procurement
255 Rockville Pike, Suite 180 • Rockville, Maryland 20850 • 240-777-9900 • 240-777-9956 TTY • 240-777-9952 FAX
www.montgomerycountymd.gov

1. Changes to the Terms and Conditions of Construction Contract.

Terms and Conditions of Construction Contract, Article 16.1.5, 00-7200, Page 141 should be revised to state as follows: .5 Subsection 12.4.3, 12.4.4 and 12.5.1 as to differing site and Structural conditions.

2. **Delete:** Performance Bond pages 52 to 56 in its entirety and
Replace: With Performance Bond pages R52 – R56, attached.

3. **CHANGES AND REVISIONS TO SPECIFICATIONS**

a. Bid Form page 20 Item 7: Change time from Notice-to-Proceed to substantially complete from 150 calendar days to **120 calendar days** after Notice-to-Proceed.

b. Delete paragraph B.1, Division 1, Section 011000, of the project manual (page 155).

c. Replace paragraph B.1, Division 1, Section 011000 with the following: "The contract to be let for Montgomery County Parking Garage No. 5 Structural Repairs is specified in "Division 0 - Bidding Requirements and Condition of the Contract". The terms and conditions as well as the County's procurement regulations are included under Division 0 of these specifications. The facility is currently closed in order to facilitate the repairs. As such the Structural Repairs shall be conducted in one mobilization but shall be sequenced as required by the Contractor. **The anticipated date for substantial completion of this project is 120 calendar days following the notice-to-proceed**. Pursuant to the requirements under "Division 0 - Bidding Requirements and Condition of the Contract" the Contractor will be assessed liquidated damages for each calendar day the project is delayed beyond the required date for substantial completion.

d. Delete paragraph 8.1, in Article 8 on page 15 of the project manual.

e. Replace paragraph 8.1, in Article 8 on page 15 of the project manual with the following: "The time in which the Contractor agrees to complete the Work is the essence of the Contract and failure to complete the Work within the time specified will entitle the Owner to, and it will, deduct and retain from any monies due the Contractor, liquidated damages in the amount of **One thousand Dollars ($1,000.)** per day, for each calendar day in excess of the time specified by the Bidding Documents for Substantial Completion of the Work. The sum shall not be considered as a penalty but as a sum mutually agreed upon as the ascertained damages suffered by the Owner because of the delay. Official starting date shall be as stated in the Notice to Proceed."

f. Delete paragraph 2.2-A in Section 071800, Division 7 (found on p.276).

g. The waterproofing membrane system for suspended parking decks is Iso-Flex 750 U HVT (UV Resistant, Heavy Duty Traffic Coating) system broadcasted with silica quartz sand aggregate or approved equal.

h. Add traffic coating application over level 2 along the north ramp of the garage and within the limits noted on revised drawing S1.03.

i. Delete paragraph 2.2-A in Section 071800, Division 7 (found on p.276)

j. The approved Pedestrian Grade Waterproofing membrane is Iso-Flex 750 U MVT (UV Resistant, Medium Duty Traffic Coating) system consisting of primer, base coat and one top coat broadcasted with silica quartz sand aggregate or approved equal.

k. The Pedestrian Grade non-slip coating on stairs treads and landings shall be applied within Stair #1 and 2.

l. Delete paragraph 2.1 A of Section 071900, Division 7, (found on page 238).

m. Replace paragraph 2,1-A Section 071900, of Division 7 with the following: "Silane, Penetrating Water Repellent: Clear, monomeric compound containing **forty percent (40%) solids** of alkyltrialkoxysilanes; with alcohol, mineral spirits, water, or other proprietary solvent carrier; and with 3.3 lb/gal. (400 g/L) or less of VOCs" by ProSoCo, Inc. or approved equal.

n. Add Stairwells #1 and 2 to paragraph 1.2-A Section 099600 Division 9.

o. Add to paragraph 1.2-A.2, Section 081100, Division 8: Furnish MEDCO lock and keyed to the County's specifications. The County will provide the specifications for the keying.

p. Change quantity of studs referenced paragraph in 3.1-E.2.d from 1,000 EA to 2,000 (total).

q. All cracks 1/16" or greater shall be repaired by routing and sealing of the crack prior to membrane installation. There is no quantity allowance for crack repairs. Control joints placement in the new concrete decks shall be two per bay aligned in an east-west direction and four (4) total, aligned in a north-south direction. Construction joints to be determined by the contractor's pour sequence.

r. Maintain 2'-6" of projected reinforcing steel beyond the edges of slab removal to enable proper lap splice and developmental length.

s. Refer to specification sections, divisions and drawings for noise ordinance requirements and noise abatement program.

4. CHANGES TO DRAWINGS

a. Remove drawing S1.03 from the current construction documents, issue date May 23, 2011 and replace it with revised Structural Drawing S1.03, issue date June 14, 2011.

b. Add Demolition plans D-1.06 and D-1.07, issue date June 14, 2011 to the bid documents.

5. CLARIFICATIONS

a. The limits of membrane removal as noted Drawing D-1.02 will be between Column Grid Lines B to C and 8'-0" west of Grid Line 4 to 8'-0" east of Grid Line 5.

b. All slabs on grade concrete shall be air entrained 4,500 psi.

c. All concrete placed in elevated decks shall be 5,000 PSI light weight concrete with a unit weight of 120 lb/cf +/- 3 lb/cf.

d. Synthetic fibers are needed in all concrete mix design.

e. Corrosion Inhibitor in all concrete mix design shall be applied at the rate of 3 gal./cy.

f. Angle bracing as shown in section 8-S4.01 and 10-S4.01 is only along the Dixon Avenue side of the garage.

g. The County has found no evidence of lead paint within the facility.

h. Limits of concrete pour shall be 5,000 sf or less.

i. Section 2 on S-4.01 shows the typical perimeter detail for slab placement adjacent to existing decks.

j. Original structural drawings can be reviewed at the Engineer's office. Call in advance at 301-881-1441 to make arrangements for review.

k. No pedestrian grade coating shall be applied over nosing.

l. All new elevated concrete decks shall receive the approved traffic bearing waterproofing system to extent specified in the contract documents.

m. Existing waterproofing membrane shall be protected during the course of the contract.

n. The extent of girder reinforcing and strengthening is limited to the areas of full deck replacement.

o. Expansion joint replacement shall continue through sidewalk areas and onto walls adjacent to the sidewalk.

p. The required puddle filler for EPDM roofing membrane shall be ELASTEK 505 Puddle Plaster.

PERFORMANCE BOND (95% of the Contract Amount)

_____, as surety ("Surety"), and _____, as principal ("Contractor"), enter into and execute this bond ("Performance Bond"), and bind themselves in favor of Montgomery County Maryland, as obligee ("Owner"), in the initial amount of $_____ (ninety-five percent (95%) of the Contract Sum or such greater amount as the Contract Sum may be adjusted to from time to time in accordance with the Contract between the Contractor and Owner) (the "Penal Sum").

WHEREAS, the Contractor has executed a contract with Montgomery County Maryland dated _____ (the "Contract") for construction of the XXXXXXXXXXXXXXXXXXXXXXXXXXXXXX (the "Project"); and

WHEREAS, the Owners have required the Contractor to furnish this Performance Bond as a condition to executing the Contract with the Contractor;

NOW THEREFORE, the Surety and the Contractor, both jointly and severally, and for themselves, their heirs, administrators, executors, successors and assigns agree:

1. **CONTRACT INCORPORATED; SURETY AND CONTRACTOR BOUND FOR FULL PERFORMANCE.** The Contract is incorporated by reference and made a part of this bond. The Surety and the Contractor are bound for the full performance of the Contract including without exception all of the Contract Documents (as defined in the Contract) and all of their terms and conditions, both express and implied.

2. **OWNER'S AFFIDAVIT OF CONTRACTOR BREACH OR DEFAULT.** If the Owner shall provide to Surety the written affidavit of the Owner stating that the Contractor is in breach or default of the Contract, and that such breach or default remains uncured by the Contractor, then upon delivery of such affidavit to the Surety in the method for providing notices as set forth in Paragraph 7 below, Surety must promptly notify the Owner in writing which action it will take as permitted in Paragraph 3.

3. **SURETY'S OBLIGATION UPON DELIVERY OF OWNER'S AFFIDAVIT OF CONTRACTOR'S BREACH OR DEFAULT.** Upon the delivery of the Owner's affidavit of breach or default by the Contractor as provided in Paragraph 2 above, the Surety may promptly remedy the breach or default or must, within thirty (30) days, proceed to take one of the following courses of action:

    a. **Proceed Itself.** Complete performance of the Contract including correction of defective and nonconforming Work through its own contractors or employees, approved as being acceptable to the Owner, in the Owner's sole discretion, provided, however, that Owner's discretion to approve Surety's contractor will not be unreasonably withheld as to any contractor who would have qualified to offer a proposal on the Contract (including the Contractor provided the Surety has remedied the default to satisfaction of the Owner). During this performance by the Surety the Owner will pay the Surety from its own funds only those sums as

would have been due and payable to the Contractor under the Contract as and when they would have been due and payable to the Contractor in the absence of the breach or default not to exceed the amount of the remaining Contract balance less any sums due the Owner under the Contract. During this performance Surety's payment bond must remain in full force and effect; or

b. **Tender a completing contractor acceptable to Owner.** Tender a contractor, approved as being acceptable to the Owner (in the Owner's sole discretion), together with a contract for fulfillment and completion of the Contract executed by the completing contractor, to the Owner for the Owner's execution. Owner's discretion to approve Surety's completing contractor will not be unreasonably withheld as to any contractor who would have qualified to offer a proposal on the Contract and is not affiliated (as defined in the General Conditions of Contract) with the Contractor. Owner's discretion to approve Contractor as the completing contractor, however, shall be in Owner's sole subjective discretion. Upon execution by the Owner of the contract for fulfillment and completion of the Contract, the completing contractor must furnish to the Owner a performance bond and a separate payment bond, each in the form of those bonds previously furnished to the Owner for the Project by the Contractor. Each such bond must be in the Penal Sum of the full cost to complete the Contract. The Owner will pay the completing contractor from its own funds only those sums as would have been due and payable to the Contractor under the Contract as and when they would have been due and payable to the Contractor in the absence of the breach or default not to exceed the amount of the remaining Contract balance less any sums due the Owner under the Contract. To the extent that the Owner is obligated to pay the completing contractor sums which would not have then been due and payable to the Contractor under the Contract (any sums in excess of the then remaining Contract balance less any sums due the Owner under the Contract), the Surety must pay to the Owner the full amount of those sums at the time the completing Contractor is tendered to the Owner so that the Owner can utilize those sums in making timely payment to the completing contractor; or

c. **Tender the Full Penal Sum.** Tender to the Owner the full Penal Sum of the surety bond. The Owner will refund to the Surety without interest any unused portion not spent by the Owner procuring and paying a completing contractor or completing the construction contract itself, plus the cost allowed under Section 4, after completion of the contract for fulfillment and completion of the Contract and the expiration of any applicable warranties; or

d. **Other Acts.** Take any other acts mutually agreed upon in writing by the Owner and the Surety.

4. **SURETY'S ADDITIONAL OBLIGATIONS.** In addition to those duties set forth herein above, the Surety must promptly pay the Owner (i) all losses, costs and expenses resulting from the Contractor's breach(es) or default(s), including, without limitation, fees, expenses and costs for architects, engineers, consultants, testing, surveying and attorneys, plus (ii) liquidated or actual damages, whichever may be provided for in the contract, for lost use of the Project, plus (iii) reprocurement costs and fees and expenses, plus (iv) costs incurred at the direction, request, or as a result of the acts or omissions of the Surety; provided that in no event shall Surety's liability exceed the Penal Sum of this Bond.

5. **SURETY'S WAIVER OF NOTICE.** The Surety waives notice of any Modifications to the Contract, including changes in the Contract Time, the Contract Sum, the amount of liquidated damages, or the Work to be performed.

6. **NO THIRD PARTY BENEFICIARIES.** The Surety provides this Performance Bond for the sole and exclusive benefit of the Owner and, if applicable, any dual obligee designated by attached rider, together with their heirs, administrators, executors, successors and assigns. No other party, person or entity has any rights against the Surety.

7. **METHOD OF NOTICE.** All notices to the Surety, the Contractor or the Owner must be given by Certified Mail, Return Receipt Requested, to the address set forth for each party below:

SURETY:

Name: _____
Attention: _____
Street: _____
City, State, Zip _____

CONTRACTOR:
Name: _____
Attention: _____
Street: _____
City, State, Zip _____

OWNER:

Montgomery County Government
Attention: Steve Nash, Contract Administrator
100 Edison Park Dr. 4th Floor
Gaithersburg, Maryland 20878

with a copy to:

Office of the County Attorney
John Markovs, Associate County Attorney
101 Monroe Street, 3rd Floor
Rockville, Maryland 20850

8. **STATUTE OF LIMITATIONS.** Any statutory limitation, which may be contractually superseded, to the contrary notwithstanding, any action hereon may be instituted so long as the applicable statute of limitations governing the Contract (including any warranty period) has not run or expired or within three (3) years following Final Completion of the Contract (including any warranty period) and acceptance of the Work performed under the Contract by the Owner, whichever is longer.

9. **RECITALS.** The recitals contained in this Performance Bond are incorporated by reference herein and are expressly made a part of this Performance Bond.

10. **GOVERNING LAW.** This Performance Bond shall be governed by, and construed in accordance with the laws of the State of Maryland without regard to its conflict of laws provisions.

11. **VENUE.** In the event any legal action shall be filed upon this Performance Bond, venue shall lie exclusively in the Circuit Court for Montgomery County, Maryland.

SIGNATURE PAGE FOLLOWS

Contractor	**Surety**
(Typed Firm Name)	(Typed Firm Name)
(Seal)	(Seal)
By:	By:
(Signature)	(Signature)
(Printed Name)	(Printed Name)
(Title)	(Title)
(Address)	(Address)
(Date of Execution)	(Date of Execution)

END OF DOCUMENT

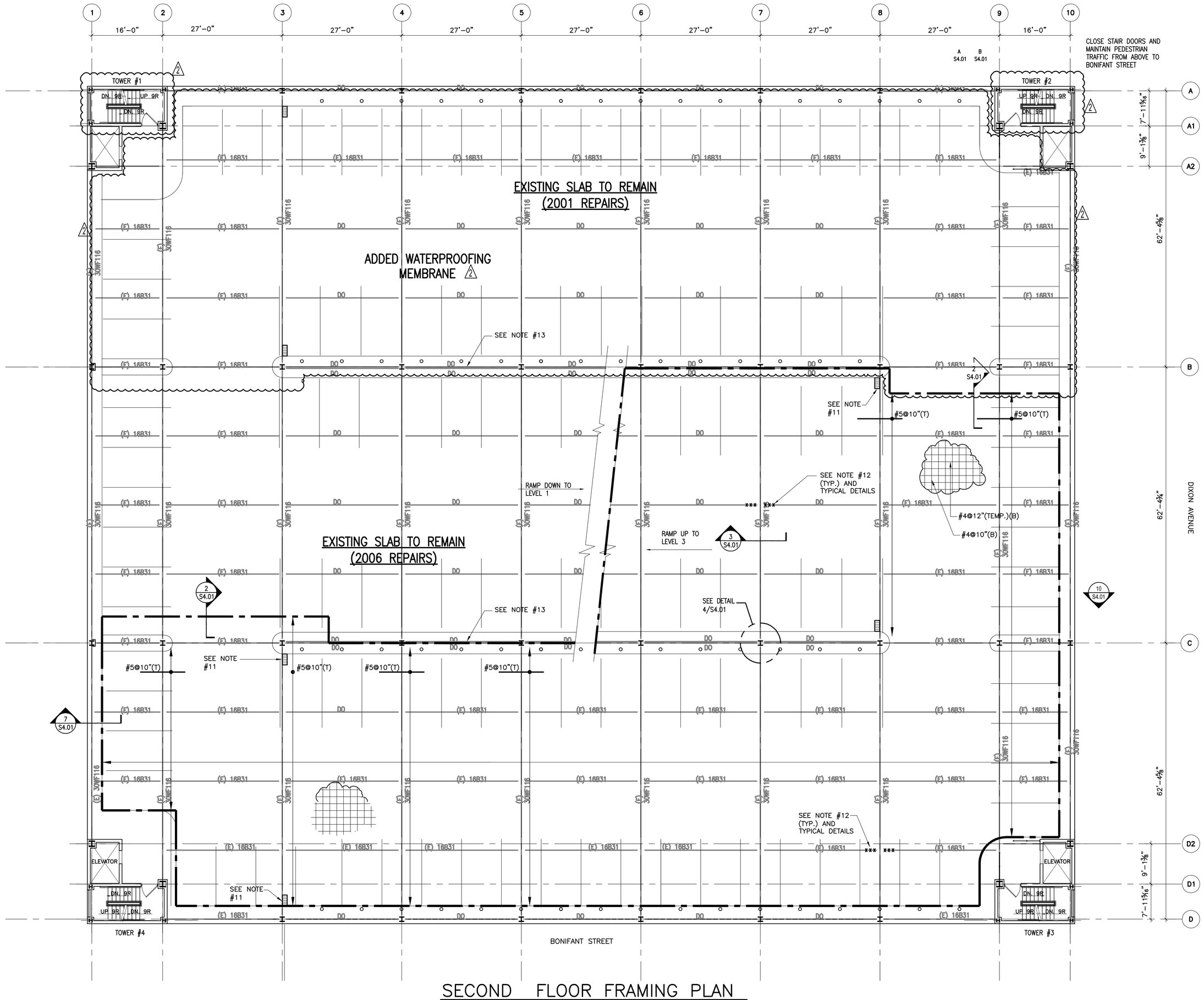

SECOND FLOOR FRAMING PLAN

SCALE: 3/32" = 1'-0"

△2 – SEE ADDENDUM NO. 1 FOR ADDITIONAL SCOPE OF WORK.

ADDENDUM #2

NOTES

1.) NEW ELEVATED FLOOR CONSTRUCTION 6" (NOMINAL) THICK SOLID LIGHTWEIGHT CONCRETE SLAB. CONCRETE STRENGTH = 5000 PSI IN 28 DAYS.

2.) PROVIDE A BOTTOM REINFORCING MAT AS FOLLOWS: #4@10" O.C. NORTH / SOUTH DIRECTION, OUTERMOST BOTTOM REINFORCING. #4@12" O.C. EAST / WEST DIRECTION, TEMPERATURE REINFORCEMENT.

3.)PROVIDE TOP BARS AS INDICATED ON PLAN OVER ALL GIRDERS AND BEAMS. ALL SLAB REINFORCING TO BE EPOXY COATED.

4.) THE FOLLOWING CLEAR CONCRETE COVER SHALL BE PROVIDED FOR CONCRETE COVER. U.N.O. :

TOP BARS: 1"
BOTTOM BARS: ¾"

5) FOR EXTENT OF EXISTING SLAB DEMOLITION, SEE DEMOLITION DRAWINGS.

6) NEW WIDE FLANGE STRUCTURAL SHAPES SHALL BE ASTM A-992, GRADE 50. NEW CHANNELS, ANGLES & PLATES SHALL BE ASTM A-36, U.N.O.

7.) EXISTING STEEL BEAMS, GIRDERS, COLUMNS & SHEAR STUDS ARE TO BE UNDAMAGED AT THE COMPLETION OF SLAB DEMOLISHING. DAMAGED EXISTING MEMBERS TO REMAIN SHALL BE REPAIRED. AT NO ADDITIONAL COST TO THE OWNER AND AS DIRECTED BY THE ENGINEER.

8.) THE FOLLOWING DESIGNATION IS USED FOR COMPOSITE BEAMS:

(E) 16xB31 –BEAM SIZE, EXISTING (W16x26) EQUIVALENT

(27) –# OF ¾" DIA. x 4" LONG HEADED SHEAR STUDS REQUIRED.

C=¾" –AMOUNT OF UPWARD CAMBER REQUIRED @ MIDSPAN OF BEAM.

(N) –NEW BEAM

9.) "M" INDICATES MOMENT CONNECTION REPAIR. SEE DETAILS ON DRAWING S6.01

10.) PROVIDE 12"⅝"x10'-0" LONG PLATE WELDED TO UNDERSIDE OF BOTTOM FLANGE OF ALL EXISTING W30 GIRDERS (SPANNING 5'-0" FROM THE CENTER OF GIRDER IN EACH DIRECTION).

11.) REPLACE ALL EXISTING DRAINS WITHIN THE REPAIR AREAS WITH NEW DECK DRAINS. ATTACH DRAIN TO EXISTING PLUMBING LINES. SEE DRAIN REPLACEMENT DETAILS.

12.) xxx DENOTES PLACEMENT OF NEW ¾"@x4" LONG HEADED SHEAR STUDS AT ALL BEAM/GIRDER INTERSECTION. PROVIDE SHEAR STUDS SPACED AT 6" ON CENTER.

13.) SAND BLAST AND PAINT ALL STRUCTURAL STEEL BEAMS, BOTH UPPER AND LOWER BEAM, GIRDERS AND COLUMNS ALONG GRID LINES (B) AND (C) FROM LINE (3) TO LINE (8) EACH LEVEL. SEE DETAIL 1 ON S4.01

PLAN NORTH

OWNER

CONSULTANT

SK&A

Smislova, Kehnemui & Associates, P.A.
Consulting Structural Engineers

12505 Park Potomac Ave. Suite 200
Potomac, Maryland 20854
Telephone (301) 881-1441
Fax (301) 881-8664

IFB No. 1005807

Montgomery County Parking Garage #5
Silver Spring, Maryland
DECK REPLACEMENT PROGRAM

SEAL

PROFESSIONAL CERTIFICATION. I HEREBY CERTIFY THAT THESE DOCUMENTS WERE PREPARED OR APPROVED BY ME, AND THAT I AM A DULY LICENSED PROFESSIONAL ENGINEER UNDER THE LAWS OF THE STATE OF MARYLAND, LICENSE NUMBER 19213, EXPIRATION DATE: 07-27-2011.

REVISIONS

DESIGN DEVELOPMENT	03/28/11
ISSUED FOR PERMIT	04/27/11
ISSUED FOR BID	05/23/11
△1 ADDENDUM NO. 2	06/20/11

DRAWN BY:	BS
CHECKED BY:	HW
SK&A JOB NO:	06-404
DATE:	12/10/09
SCALE:	AS SHOWN

SHEET TITLE

SECOND FLOOR FRAMING PLAN

SHEET NO.

S1.03

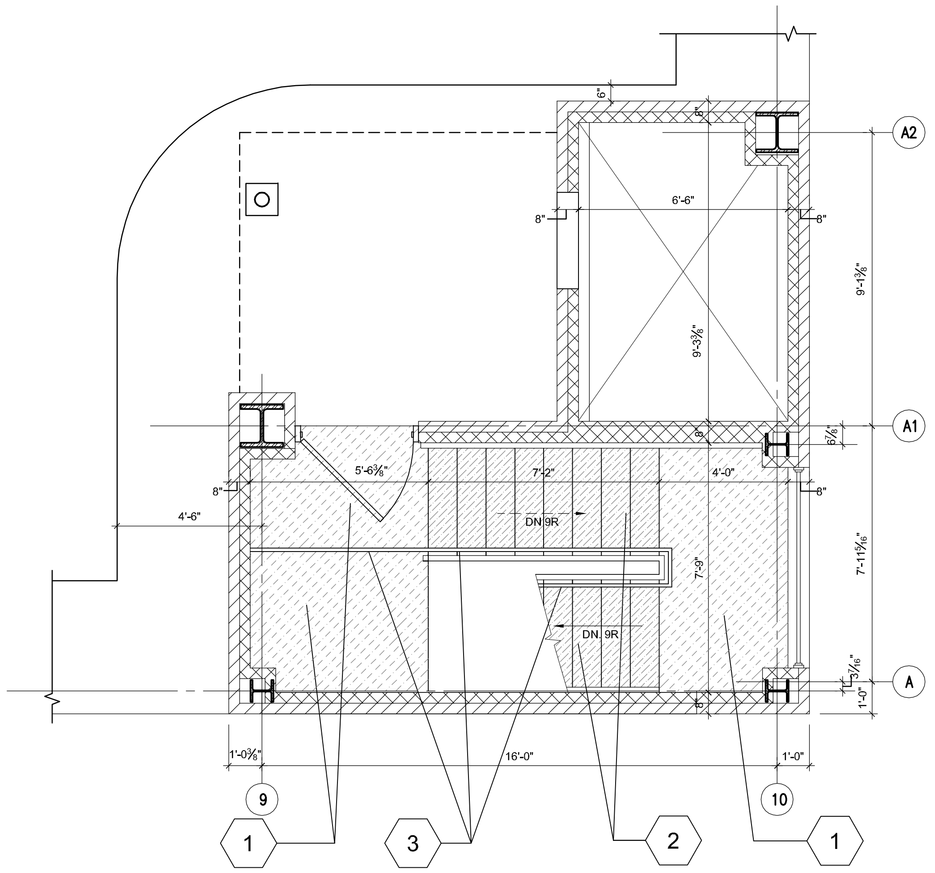

SCALE: 3/8"=1'-0"

ROOF LEVEL STAIR PLAN #3

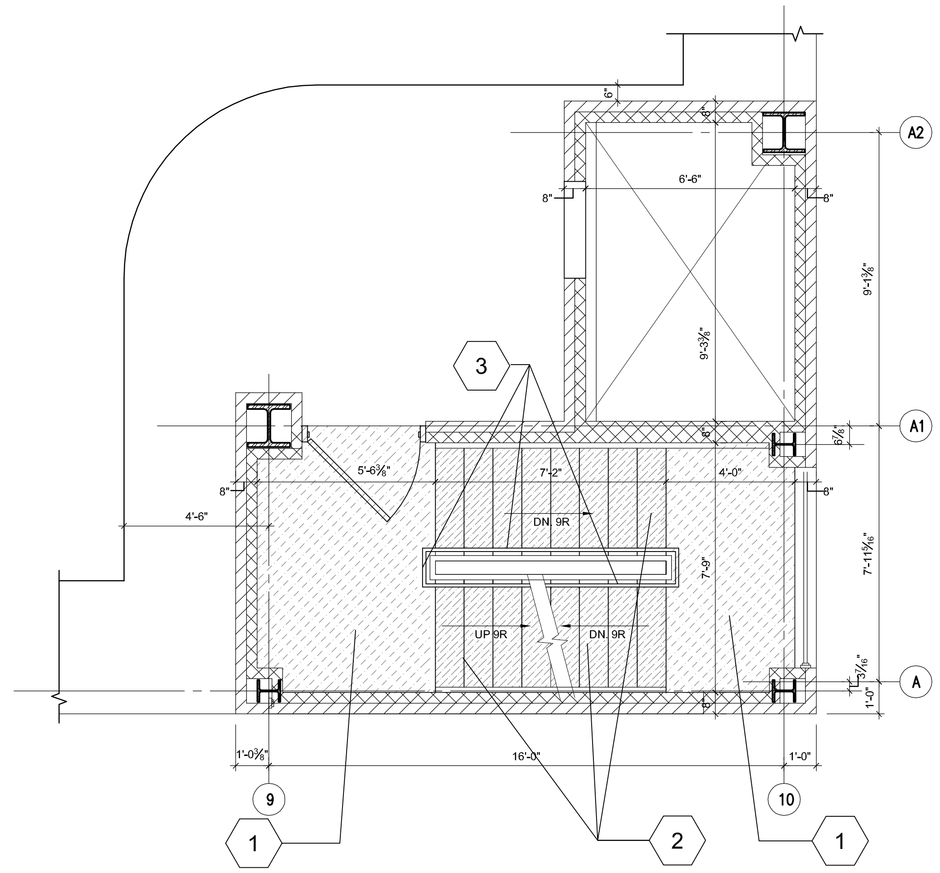

SCALE: 3/8"=1'-0"

THIRD FLOOR STAIR PLAN #3

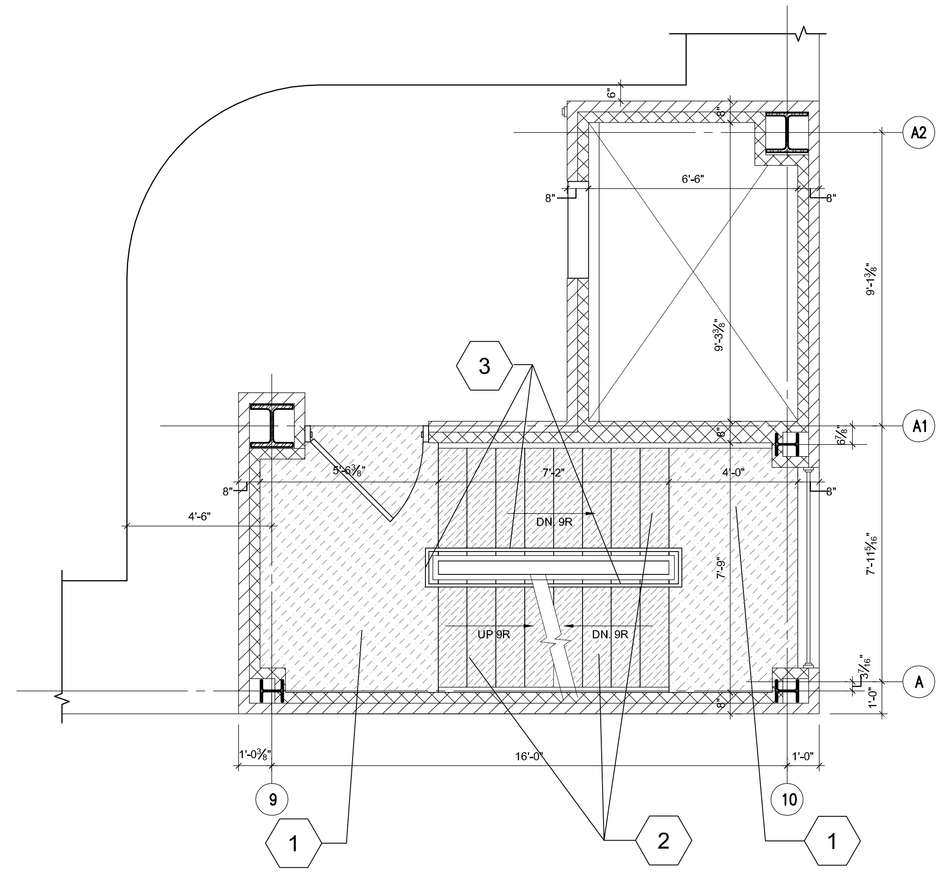

SCALE: 3/8"=1'-0"

SECOND FLOOR STAIR PLAN #3

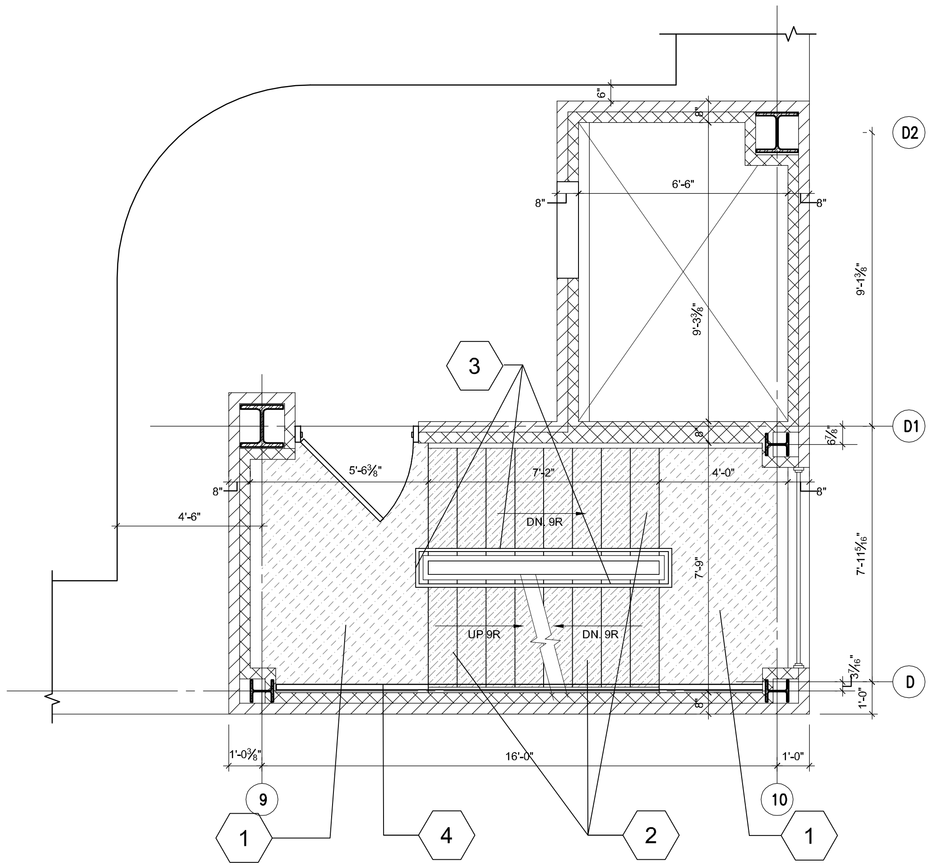

SCALE: 3/8"=1'-0"

FIRST FLOOR STAIR PLAN #3

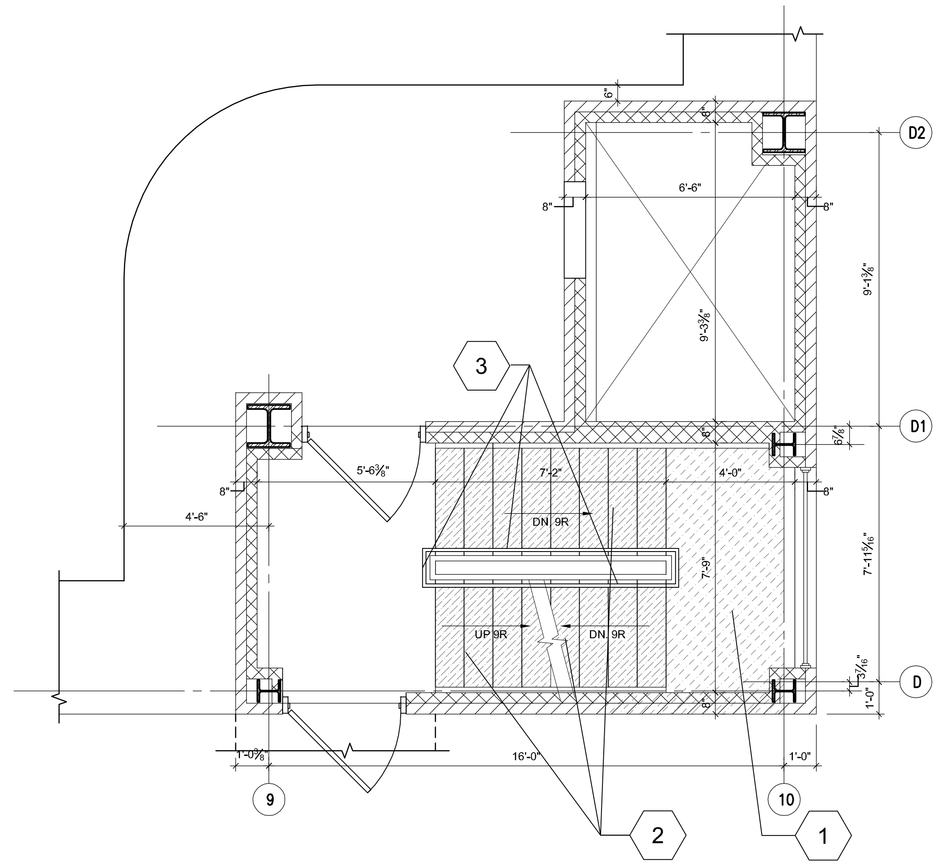

SCALE: 3/8"=1'-0"

BASEMENT LEVEL STAIR PLAN #3

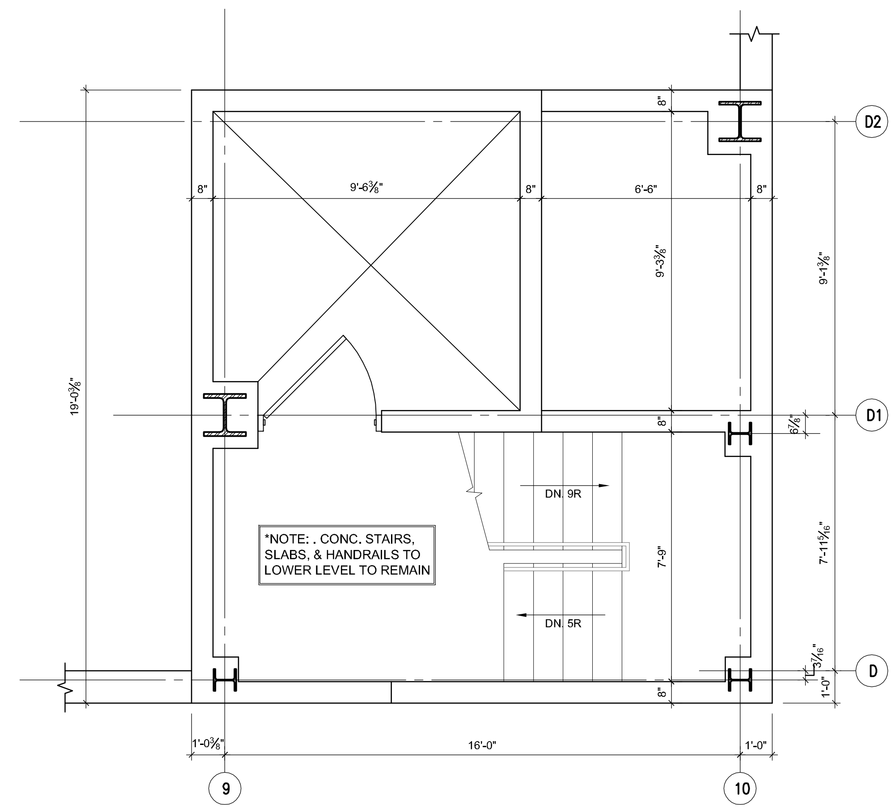

SCALE: 3/8"=1'-0"

FOUNDATION LEVEL STAIR PLAN #3

ADDENDUM #2

DEMO NOTES:

1	DEMO EXISTING CONCRETE LANDINGS LEAVING THE EXISTING SUPPORTING STEEL STRUCTURAL MEMBERS
	IN TACT. PREP EXSITNG STEEL TO RECIEVE NEW CONCRETE PER ARCH/STRUCTURAL DRAWINGS
2	DEMO EXISTING METAL & CONCRETE TREADS & RISERS LEAVING THE EXISTING STEEL STRINGERS
	PREP STRINGERS TO RECEIVE NEW TREADS, RISERS, & SUPPORT SYSTEM PER ARCHITECTURAL DRAWINGS A1.03
3	DEMO EXISTING STEEL STAIR RAILS PREP EXISTING STRINGERS TO RECEIVE NEW PER ARCH. DWG A1.03
4	**NOTE: EXIST. WALL RAILING W/ WOOD TOP RAIL TO REMAIN / CLEAN & PREP FOR NEW PAINT.

LEGEND:

	EXISTING CONCRETE AT LANDING TO BE REMOVED
	EXISTING METAL PAN TREADS AND RISERS TO BE REMOVED

KEi
ARCHITECTURE
INTERIORS
URBAN DESIGN

OWNER

MONTGOMERY COUNTY 1776 MARYLAND

CONSULTANT

SK&A
Smislova, Kehnemui & Associates, P.A.
Consulting Structural Engineers
12505 Park Potomac Ave. Suite 200
Potomac, Maryland 20854
Telephone (301) 881-1441
Fax (301) 881-8664

IFB No. 1005807

Montgomery County Parking Garage #5
Silver Spring, Maryland
DECK REPLACEMENT PROGRAM

SEAL

PROFESSIONAL CERTIFICATION. I HEREBY CERTIFY THAT THESE DOCUMENTS WERE PREPARED OR APPROVED BY ME, AND THAT I AM A DULY LICENSED PROFESSIONAL ENGINEER UNDER THE LAWS OF THE STATE OF MARYLAND, LICENSE NUMBER 19213, EXPIRATION DATE: 07-27-2011.

REVISIONS

DESIGN DEVELOPMENT	03/28/11
ISSUED FOR PERMIT	04/27/11
ISSUED FOR BID	05/23/11
1 ADDENDUM NO. 2	06/20/11

DRAWN BY:	BS
CHECKED BY:	HW
SK&A JOB NO:	06-404
DATE:	12/10/09
SCALE:	AS SHOWN

SHEET TITLE

STAIR #3
DEMO PLAN
& NOTES

SHEET NO.

D1.06

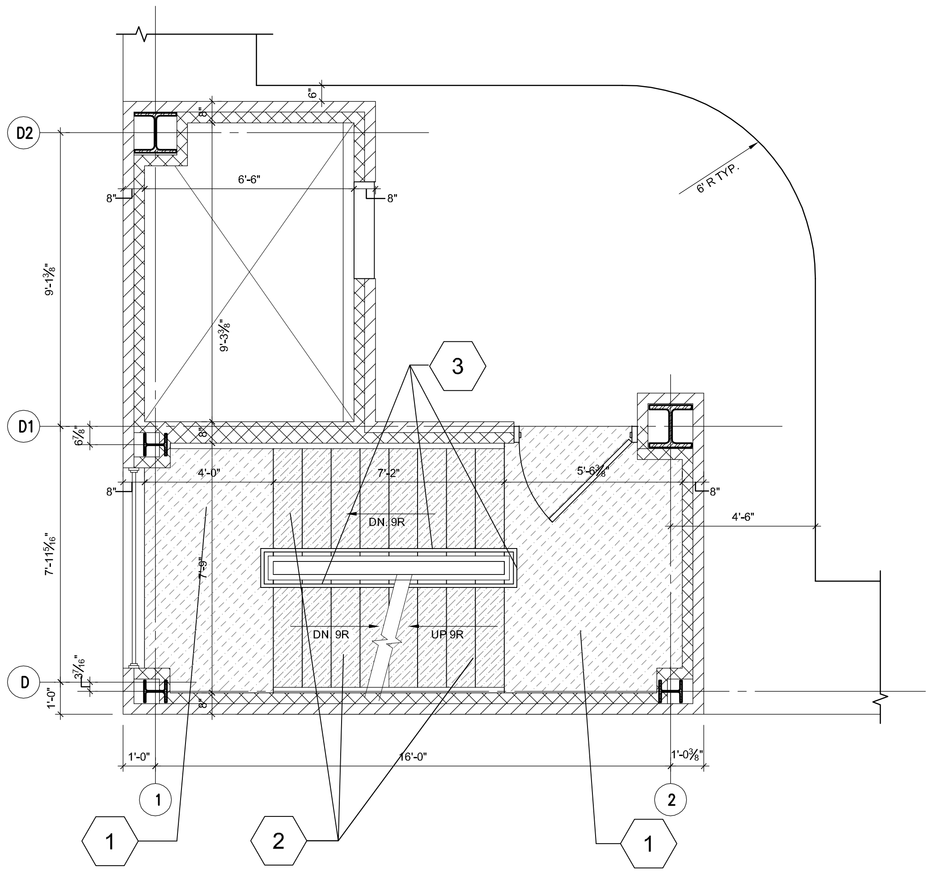

SCALE: 3/8"=1'-0"

SECOND FLOOR STAIR PLAN #4

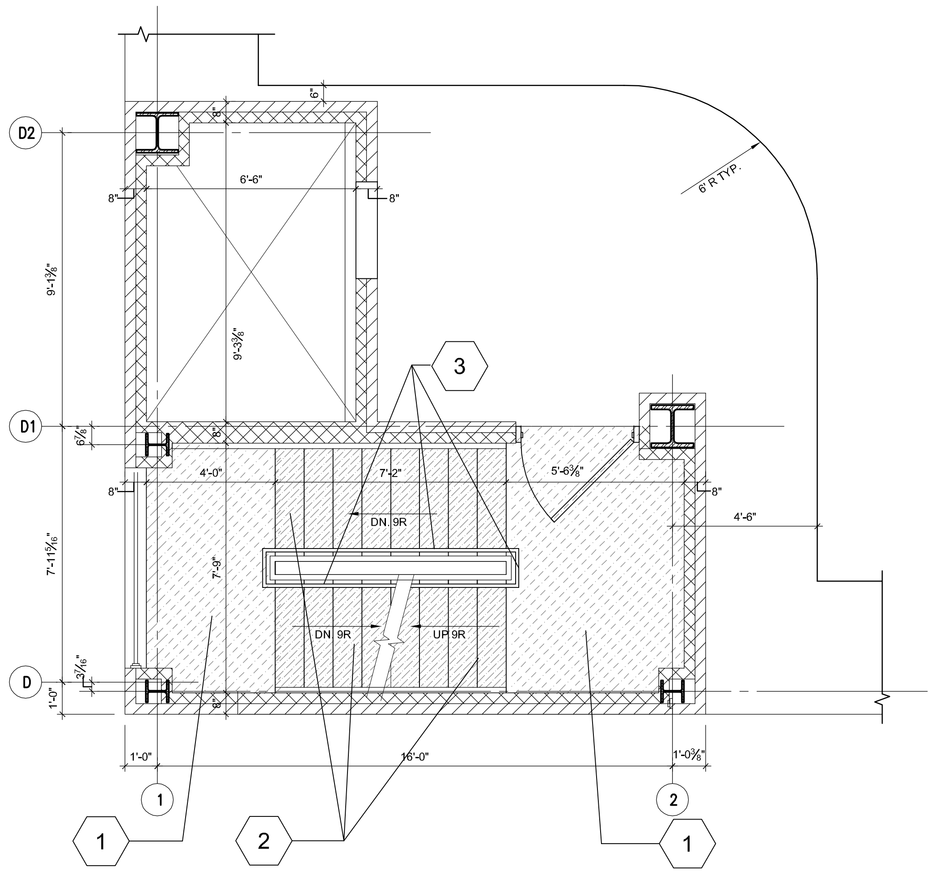

SCALE: 3/8"=1'-0"

THIRD FLOOR STAIR PLAN #4

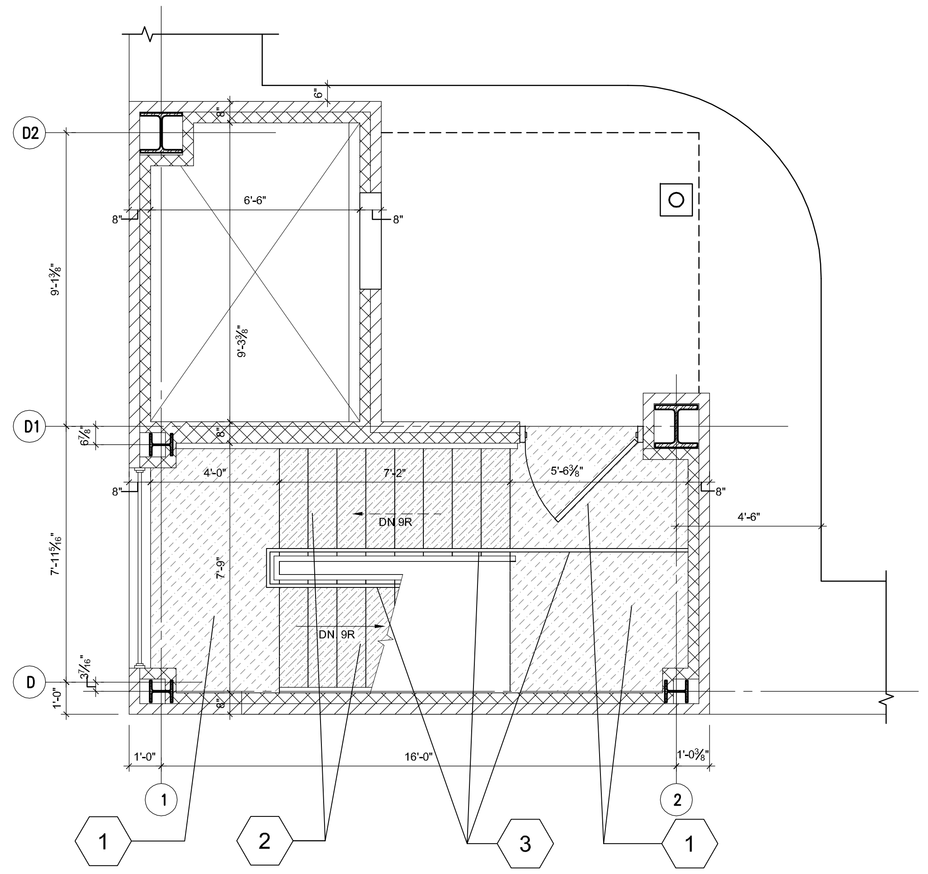

SCALE: 3/8"=1'-0"

ROOF LEVEL STAIR PLAN #4

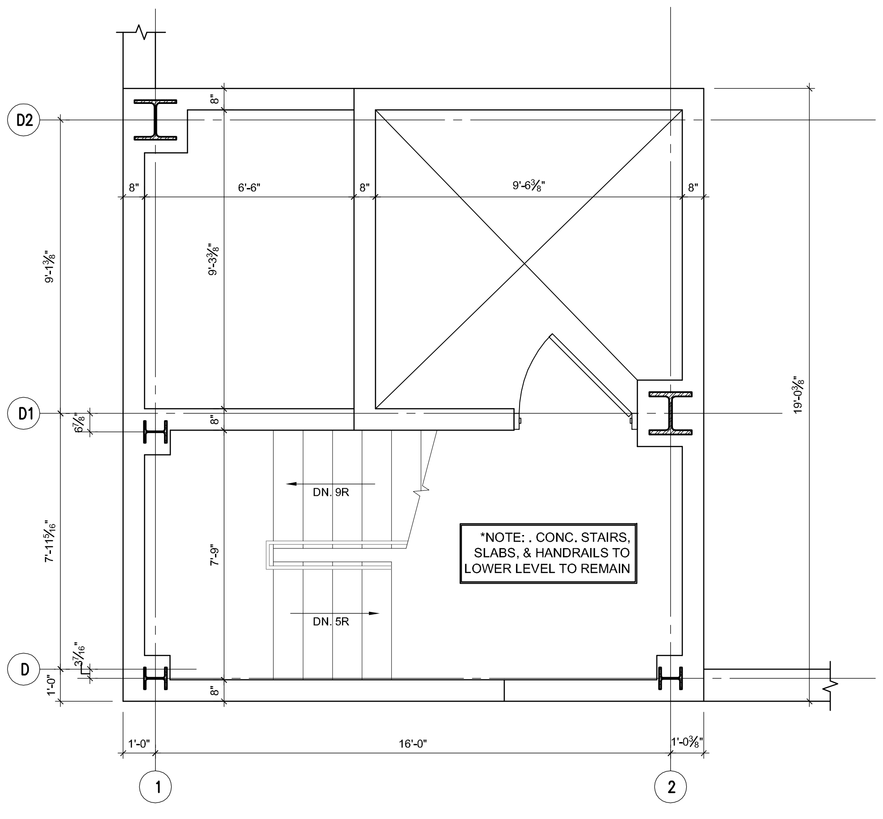

SCALE: 3/8"=1'-0"

FOUNDATION LEVEL STAIR PLAN #4

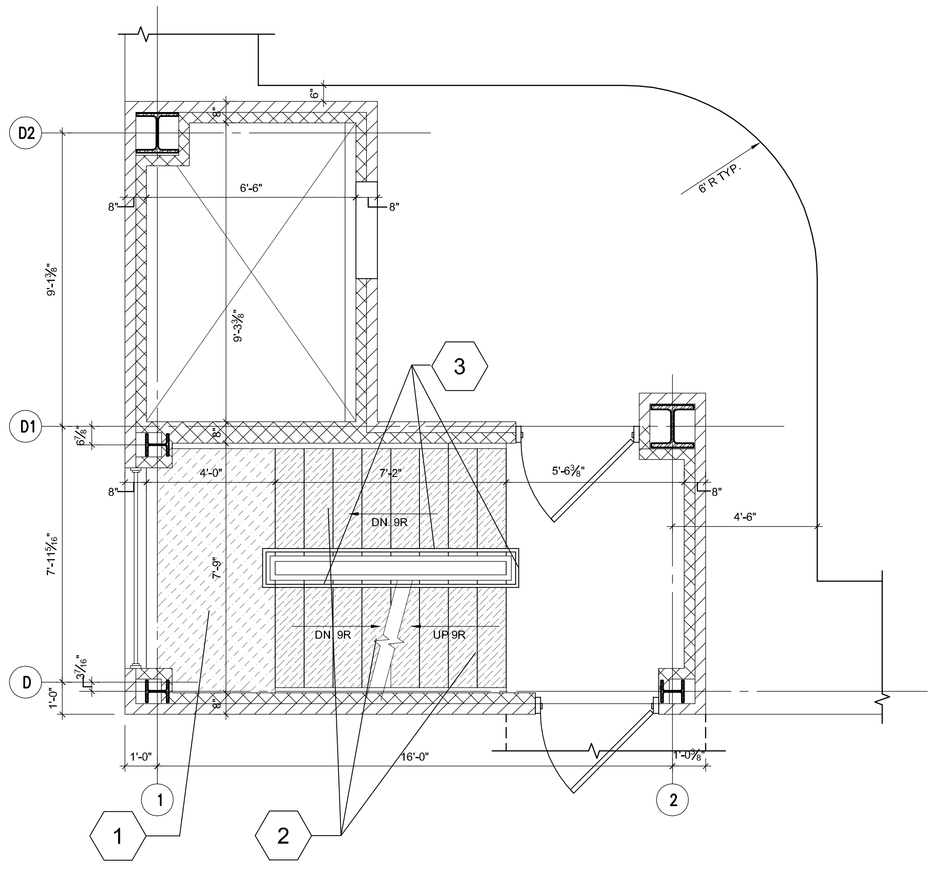

SCALE: 3/8"=1'-0"

BASEMENT LEVEL STAIR PLAN #4

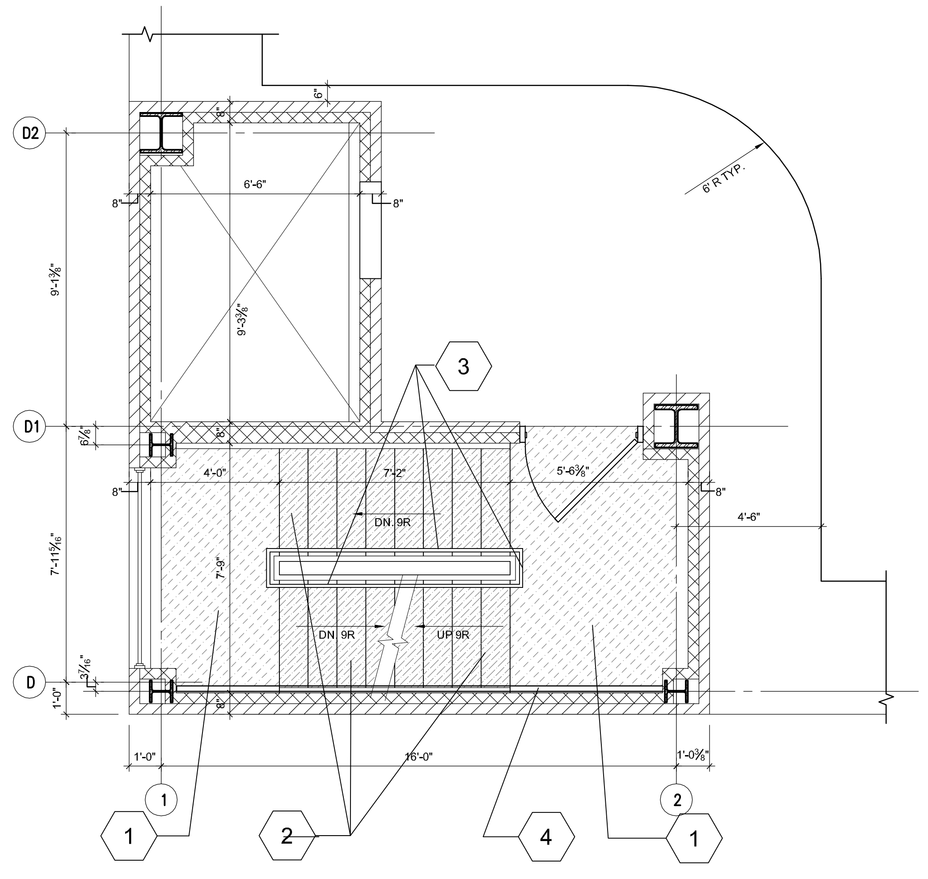

SCALE: 3/8"=1'-0"

FIRST FLOOR STAIR PLAN #4

ADDENDUM #2

DEMO NOTES:

1	DEMO EXISTING CONCRETE LANDINGS LEAVING THE EXISTING SUPPORTING STEEL STRUCTURAL MEMBERS
	IN TACT. PREP EXSITNG STEEL TO RECIEVE NEW CONCRETE PER ARCH/STRUCTURAL DRAWINGS
2	DEMO EXISTING METAL & CONCRETE TREADS & RISERS LEAVING THE EXISTING STEEL STRINGERS
	PREP STRINGERS TO RECEIVE NEW TREADS, RISERS, & SUPPORT SYSTEM PER ARCHITECTURAL DRAWINGS A1.03
3	DEMO EXISTING STEEL STAIR RAILS PREP EXISTING STRINGERS TO RECEIVE NEW PER ARCH. DWG A1.03
4	**NOTE: EXIST. WALL RAILING W/ WOOD TOP RAIL TO REMAIN / CLEAN & PREP FOR NEW PAINT.

LEGEND:

	EXISTING CONCRETE AT LANDING TO BE REMOVED
	EXISTING METAL PAN TREADS AND RISERS TO BE REMOVED

KEi
ARCHITECTURE
INTERIORS
URBAN DESIGN

OWNER

MONTGOMERY COUNTY 1776 MARYLAND

CONSULTANT

SK&A

Smislova, Kehnemui & Associates, P.A.
Consulting Structural Engineers

12505 Park Potomac Ave. Suite 200
Potomac, Maryland 20854
Telephone (301) 881-1441
Fax (301) 881-8664

IFB No. 1005807

Montgomery County Parking Garage #5
Silver Spring, Maryland
DECK REPLACEMENT PROGRAM

SEAL

PROFESSIONAL CERTIFICATION. I HEREBY CERTIFY THAT THESE DOCUMENTS WERE PREPARED OR APPROVED BY ME, AND THAT I AM A DULY LICENSED PROFESSIONAL ENGINEER UNDER THE LAWS OF THE STATE OF MARYLAND, LICENSE NUMBER 19213, EXPIRATION DATE: 07-27-2011.

REVISIONS

DESIGN DEVELOPMENT	03/28/11
ISSUED FOR PERMIT	04/27/11
ISSUED FOR BID	05/23/11
1 ADDENDUM NO. 2	06/20/11

DRAWN BY:	BS
CHECKED BY:	HW
SK&A JOB NO:	06-404
DATE:	12/10/09
SCALE:	AS SHOWN

SHEET TITLE

STAIR #4
DEMO PLAN
& NOTES

SHEET NO.

D1.07