Gude Landfill

600 East Gude Drive
Rockville, Maryland 20850

Landfill Gas Monitoring Plan

Prepared By:

Montgomery County
Department of Environmental Protection
Division of Solid Waste Services
101 Monroe Street, 6th Floor
Rockville, Maryland 20850

Presented To:

Maryland Department of the Environment
1800 Washington Blvd. Suite 605
Baltimore, MD 21230

February 2009
(Amended April 2, 2009)

Gude Landfill

600 East Gude Drive
Rockville, Maryland 20850

Landfill Gas Monitoring Plan

Prepared By:

Montgomery County
Department of Environmental Protection
Division of Solid Waste Services
101 Monroe Street, 6th Floor
Rockville, Maryland 20850

Presented To:

Maryland Department of the Environment
1800 Washington Blvd. Suite
Baltimore, MD 21230

Table of Contents

Section **Page**

1 INTRODUCTION……1
1.1 PURPOSE……1
1.2 LIMITATIONS……1
1.3 REGULATORY REQUIREMENTS…… 1
2 SITE DESCRIPTION…… 2
2.1 SITE BACKGROUND……2
2.2 LANDFILL GAS COLLECTION SYSTEM BACKGROUND……2
2.3 LANDFILL GAS MONITORING BACKGROUND…… 5
2.4 LANDFILL GAS COLLECTION SYSTEM OPERATION & MAINTENANCE… 6
3 LANDFILL GAS MONITORING……7
3.1 PLAN DESCRIPTION……7
3.2 EXISTING MONITORING LOCATIONS……7
3.3 BAR PUNCH STUDY AND PROPOSED LANDFILL GAS MONITORING WELLS……7
3.4 MONITORING OF ON-SITE STRUCTURES……9
3.5 MONITORING PROTOCOLS AND FREQUENCY……10
3.6 DETECTIONS AND EXCEEDENCES……11
3.7 NOTIFICATION AND REPORTING……11
3.8 REVISIONS TO PLAN……12

Appendices

A – SITE LOCATION MAP
B – LANDFILL GAS COLLECTION SYSTEM AS-BUILTS
C – LANDFILL GAS COLLECTION SYSTEM WELL SCHEDULE
D – LANDFILL GAS MONITORING WELL DRILLINGS LOGS
E – LANDFILL GAS MONITORING WELL SCHEDULE WITH PARAMETERS
F – LANDFILL GAS MONITORING PLAN AND MONITORING WELL DETAIL WITH BAR PUNCH STUDY
G – LANDFILL GAS MONITORING AND REPORTING SUMMARY

1 INTRODUCTION

1.1 PURPOSE

The Landfill Gas Monitoring Plan (LFGMP) presents information and procedures necessary to implement a landfill gas (LFG) monitoring program for the closed Gude Landfill. The Gude Landfill is owned and maintained by the Montgomery County Department of Environmental Protection (DEP), Division of Solid Waste Services (DSWS). The Gude Landfill is located at 600 E. Gude Drive, Rockville, Maryland in Montgomery County. A Site Location Map for the Gude Landfill is included in Appendix A.

DEP/DSWS has prepared the LFGMP as requested by the Maryland Department of the Environment (MDE) in a letter dated December 12, 2008.

1.2 LIMITATIONS

The LFGMP was prepared in accordance with generally accepted industry standards of environmental practice for LFG monitoring for specific application at the Gude Landfill. The procedures and recommended approaches for LFG monitoring at the Gude Landfill are based upon site specific experience, a review of available historic information, results of field investigations, and professional judgment. To the best of our knowledge, the information presented herein is true and accurate, unless otherwise noted.

1.3 REGULATORY REQUIREMENTS

The regulatory standard concerning the collection and monitoring of LFG for explosive gases (i.e. methane gas) at solid waste landfills in Maryland is established in the Code of Maryland Regulations (COMAR) Title 26, Subtitle 4, Chapter 7, Part 03B(9) – COMAR 26.04.07.03B(9) – "*A facility may not be designed or operated in such a manner that the concentration of explosive gases generated by the facility exceeds 25 percent of the lower explosive limits for the gases in facility structures, excluding gas control or recovery system components, and the lower explosive limit for the gases at the property boundary*." According to this standard, methane concentrations resulting from the presence of LFG in on-site structures at Gude Landfill property cannot exceed 1.25 percent by volume, and methane concentrations cannot exceed 5.00 percent by volume at the Gude Landfill property boundary.

To comply with MDE's December 12, 2008 letter, DEP/DSWS will implement a formal LFGMP as described herein to assess methane concentrations at the property boundary and if methane is accumulating in any on-site structures at the Gude Landfill.

2 SITE DESCRIPTION

2.1 SITE BACKGROUND

The Gude Landfill (i.e. former Central Sanitary and Southlawn Lane Landfills) is a pre-regulatory era landfill that operated from the early 1960s until it was closed in 1982. The Gude Landfill encompasses approximately 160 acres, of which, approximately 100 acres were used for the disposal of municipal solid waste and incinerator residues. The Gude Landfill is located on the northern side of E. Gude Drive near Southlawn Lane, northeast of the City of Rockville in Montgomery County.

During filling operations, waste was placed to within 10-15 feet of the property boundary and waste depth varies from 55-100 feet across the Gude Landfill. The Gude Landfill is currently well vegetated and the final layer of waste is covered with approximately two to five feet of soil. The Gude Landfill does not have a clay or synthetic base liner or a leachate collection system.

The Gude Landfill does have stormwater infrastructure (swales, manholes, piping, and ponds) to collect and convey runoff from the vegetated cap and an active LFG collection system. There is also a Transco/Columbia Gas natural gas pipeline right-of-way that separates the Gude Landfill from the neighboring residential community, Derwood Station South. The total distance between the Community and the Gude Landfill along the northwest property boundary is approximately 200-feet.

DEP/DSWS currently performs post-closure care activities at the Gude Landfill that includes: stormwater management, erosion and sedimentation control, groundwater and surface water monitoring, and LFG management (collection and monitoring). With respect to the post-closure care activities, while not under any specific regulatory requirement to do so, DEP/DSWS has followed general industry standards and best management practices for pre-regulatory era landfills to assure public health and safety and to minimize environmental impacts.

2.2 LANDFILL GAS COLLECTION SYSTEM BACKGROUND

The LFG collection system at the Gude Landfill has evolved over time from 1984-2009. Various complications associated with landfill settlement, water infiltration into gas extraction wells, system operations turnover, and gas migration were overcome to provide a consistently operating LFG collection system. DEP/DSWS and the Contractor (SCS Engineers) have operated and maintained the LFG collection and monitoring system at the Gude Landfill to assure public health and safety. There have also been positive environmental “green” benefits realized through the former power plant facility, which will continue with the new landfill gas-to-energy facility.

Below is a chronological summary of the evolution of the Gude Landfill LFG collection and monitoring system.

Original Landfill Gas Collection System and Power Plant Facility

The original LFG collection system for the Gude Landfill was installed in 1984-1985. Montgomery County executed a gas lease agreement with Central Plants, Inc. (CPI) on December 15, 1983 for the development of a LFG collection system with a gas-to-energy (power plant) facility. Following installation and construction, the LFG collection system and power plant facility generally consisted of: 44 vertical gas extraction wells, horizontal underground and aboveground gas conveyance piping, two internal combustion engines with associated equipment, and an enclosed power plant building.

As settlement occurred from the natural decomposition of waste within the Landfill, many of the existing underground LFG conveyance pipes cracked and were modified to be aboveground. CPI also underwent various name changes as a result of corporate mergers and reorganizations. The last holder of the gas lease agreement was Covanta Power Pacific, Inc. (CPPI). From approximately 1985 to 2006, a power plant facility was operated at the Gude Landfill, which produced a range of 1.5 – 2.7 megawatts (MW) of electrical power. As a result of the power plant aging and needing substantial capital reinvestment, CPPI advised Montgomery County in November 2003 of its desire to terminate the gas lease agreement for economic reasons. Consequently, Montgomery County made plans concurrently to perform a LFG migration assessment and to replace the power plant with a LFG Flare Station with two enclosed ground flares.

Landfill Gas Migration Assessment

In June/July 2004, two independent consulting firms (SCS Engineers and Geosyntec Consultants) were contracted by DSWS to investigate the condition of the LFG collection system and assess any potential LFG migration at the Gude Landfill. Through field measurements, both firms confirmed that there were methane gas concentrations exceeding the 5.00 percent threshold limit at and beyond the northwest property boundary. DSWS requested a proposal from the Contractor (SCS Engineers) to: perform a more extensive gas migration study, conduct a gas analysis, install seven permanent gas monitoring wells along the northwest property boundary, and provide a remediation plan for controlling gas migration. This work was initiated in October 2004.

In April 2005, 20 temporary LFG monitoring wells were installed approximately 150-200 feet northwest from the Gude Landfill perimeter fence toward the Derwood Station South residential community. Methane gas was detected in a grouping of six of the temporary monitoring wells. Mitchell Welsh of MDE met with Peter Karasik of DSWS to perform an inspection of the closed Gude Landfill on June 15, 2005. The inspection included a survey of the landfill cap for settlement, a walk-through of the recent installation of the Flare Station, and a discussion that DSWS continues to investigate LFG migration at the site.

Peter Karasik prepared a notification letter to Martha Hynson of MDE dated November 14, 2005 to update MDE on DSWS's investigation and subsequent monitoring and mitigation efforts of the LFG migration along the northwest property boundary of the Gude Landfill.

In May/June 2005, DSWS contacts the Derwood Station South Home Owners Association (HOA) and individual homeowners informing them of potential LFG gas migration. DEP, DSWS, and the Contractor (SCS Engineers) checked inside homes for the presence of methane gas. DSWS offers to install methane gas detectors in homes adjacent to the Gude Landfill. A dozen homeowners eventually accept the offer and have detectors installed.

The 20 temporary LFG monitoring wells were removed at a later date due to right-of-way restrictions associated with the Transco/Columbia Gas natural gas pipeline. Start-up testing continues on the Flare Station.

Landfill Gas Flare Station with Enclosed Ground Flares

DSWS received a permit to construct from MDE, Air and Radiation Management Administration (ARMA) build and operate the Flare Station with two enclosed ground flares (Flare Station) in June 2004. DSWS received the Montgomery County building permit in August 2004. In May 2005, the DSWS initiated start-up and operation of the Flare Station to replace the 20-year old former power plant that was to be decommissioned.

The existing LFG collection system at this point included approximately 54 vertical gas extraction wells that are primarily located on the interior of the Landfill property, but maintained no gas collection on the northwest slope.

The former power plant gas lease contract was terminated in March 2006 and all associated power plant equipment was removed from the Gude Landfill. The former power plant building was generally renovated by DSWS in February 2007 for use as warehouse storage.

Landfill Gas Monitoring Well Installation

With the installation and operation of the Flare Station, methane gas concentrations dropped substantially from May-September 2005 along the northwest property boundary of the Gude Landfill; however there were still methane exceedences in the six temporary LFG monitoring wells. In September-October 2005, DSWS authorized the Contractor (SCS Engineers) to install seven (7) permanent LFG monitoring wells (W03-W09) along the northwest property boundary inside the perimeter fence and adjacent to the natural gas right-of-way. The LFG monitoring wells were to be monitored weekly by DEP.

Northwestern Property Boundary Landfill Gas Extraction System

At the time of the Flare Station construction and initial operation, there was no LFG collection on the northwest slope of the Gude Landfill property boundary. As previously described, this area was experiencing significant amounts of LFG migration. DSWS issued a task order for a contractor to design and build a LFG extraction system on the northwest slope of the Landfill. The new gas extraction wells would tie into the existing LFG collection system, which was now operating with the Flare Station instead of the power plant.

The Contractor (SCS Engineers) installed a total of 33 vertical gas extraction wells, which were installed in three separate phases. The first phase of installation occurred in March-August 2006 and included 23 gas extraction wells (EW100-EW122). The second phase occurred during September 2007 and included two additional gas extraction wells (EW123-EW124) in response to methane gas exceedences in Monitoring Well W06. The third and most recent phase occurred in April 2008 and included eight additional gas extraction wells (EW125-EW132) in response to a series of methane gas exceedences in Monitoring Wells W03 and W05-W07.

Existing Landfill Gas Collection System

The existing LFG collection system currently consists of approximately 51 vertical gas extraction wells that are scattered on the interior of the Gude Landfill and 33 vertical gas extraction wells that are located on the northwest property boundary, which borders the Derwood Station South residential community. The gas extraction wells are connected by horizontal aboveground conveyance piping that extend to the Flare Station. The enclosed ground flares at the Flare Station burn the methane and residual components of the LFG. Measurable quantities of LFG are expected to be generated for at minimum the next 20-30 years at the Gude Landfill and need to be controlled to assure public health and safety and to minimize environmental impacts. The LFG Collection System As-Builts following a February 2009 well field characterization is presented in Appendix B. The LFG Collection System Well Schedule is presented in Appendix C.

Landfill Gas-to-Energy Facility

DEP/DSWS is currently working with the Northeast Maryland Waste Disposal Authority and a Contractor (SCS Engineers) to design, construct, and operate a landfill gas-to-energy (LFGE) facility at the Gude Landfill. On September 5, 2008, DEP/DSWS received a permit from MDE/ARMA to construct a 0.8 megawatt LFGE system in conjunction with the existing Flare Station. The LFGE Facility will beneficially use LFG in one (1) Jenbacher GS 316 engine to generate electricity.

The Flare Station will operate concurrently with the LFGE Facility to burn off LFG that is not used by the Jenbacher engine in order to maximize the control of landfill gas. The Flare Station and LFGE Facility will: operate 24 hours a day, 7 days a week, have an automated monitoring system, and receive routine maintenance and inspections from the LFG operation and maintenance Contractor (SCS Engineers).

2.3 LANDFILL GAS MONITORING BACKGROUND

In September/October 2005, DSWS authorized the Contractor (SCS Engineers) to install seven (7) permanent LFG monitoring wells along the northwest property boundary of the Gude Landfill after identifying areas impacted by LFG migration. The LFG Monitoring Well (W03-W09) Drilling Logs are presented in Appendix D. Each monitoring well has three probes of differing depths: shallow (s) at 10-15 feet; intermediate (i) at 23-28 feet; and deep (d) at 33-38 feet, which allow gas measurements to be taken from varying levels in the adjacent waste mass.

These wells are very close to the edge of waste, as waste filling was performed within 10-15 feet of the property boundary.

Currently, DEP performs weekly monitoring of the LFG monitoring wells W03-W09. The DSWS LFG operation and maintenance Contractor (SCS Engineers) occasionally performs monthly LFG monitoring of the monitoring wells. Based on the monitoring results and discussions with DSWS, the Contractor (SCS Engineers) performs LFG collection system maintenance or makes well field adjustments to increase LFG collection efficiency to reduce methane concentrations in the monitoring wells. When field adjustments are deemed to not adequately control LFG migration, DSWS generally proceeds with the design and installation of additional LFG extraction wells.

2.4 LANDFILL GAS COLLECTION SYSTEM OPERATION AND MAINTENANCE

DSWS currently maintains a task order contract for LFG collection system operation and maintenance. Work is performed on a routine and as needed basis, which includes: monitoring of LFG wells, manual field adjustments to the LFG collection system, repair of LFG collection piping, installation of LFG extraction wells, and the maintenance of the Flare Station.

DSWS has previously maintained responsibility for the operation of the LFG collection system and the Flare Station. Daily inspections were performed to observe and confirm Flare Station operation. Full operation and maintenance responsibilities have recently been transitioned to a Contractor (SCS Engineers) under the LFGE facility contract. Although, some work for the time being will still be performed under the task order contract. The Contractor (SCS Engineers) will provide daily notification and monthly reports to DSWS concerning the efficiency of the LFG collection system, and the operations of the Flare Station and the LFGE Facility as both will be running concurrently at the Gude Landfill.

3 LANDFILL GAS MONITORING

3.1 PLAN DESCRIPTION

MDE and COMAR provide no specific design or spacing criteria for the installation of subsurface LFG monitoring wells. The number and location of all new monitoring wells instituted in this LFGMP for the Gude Landfill will be evaluated based on the field measurement of methane concentrations at the property boundary (through a bar punch study) and in on-site structures. DEP/DSWS will seek recommendations from MDE regarding LFG monitoring well placement, as required, following MDE's review of the bar punch study data.

Any LFG monitoring wells to be installed will be placed as close to the Gude Landfill property boundary as practical, with the bottom of the well situated at the approximate depth of the groundwater level. The actual depth will be determined during the installation of the monitoring wells. If monitoring wells are to be installed at a depth greater than 25 feet, multi-level wells (with probes) will be utilized.

Note that the Gude Landfill is bound by two tributaries of Rock Creek: Crabbs Branch Stream located on the top northwest property and Southlawn Branch Stream located on the southeast property boundary. These tributaries act as hydraulic barriers to the movement of subsurface LFG. Thus, no LFG monitoring wells are envisioned to be installed along the property boundary near these surface water bodies; however, investigations for the presence of LFG will be conducted at the property boundary as part of the bar punch study.

3.2 EXISTING MONITORING LOCATIONS

As previously mentioned, there are seven (7) permanent LFG monitoring wells (W03-W09) that are located along the northwest property boundary of the Gude Landfill. The current Landfill Gas Monitoring Well Schedule with Monitoring Parameters is presented in Appendix E. Currently, DEP monitors for methane concentrations in monitoring wells W03-W09 on a weekly basis. DSWS also tracks and reviews the methane monitoring data weekly; however the monitoring frequency by DEP may be decreased to bi-weekly or monthly after a prolonged period with no methane exceedences.

The monitoring wells are labeled W03-W09 and are presented on the Landfill Gas Monitoring Plan in Appendix F. Each monitoring well has three probes of differing depths: shallow (s) at 10-15 feet; intermediate (i) at 23-28 feet; and deep (d) at 33-38 feet, which allow gas measurements to be taken from varying levels in the adjacent waste mass.

3.3 BAR PUNCH STUDY AND PROPOSED LANDFILL GAS MONITORING WELLS

As required by MDE and COMAR, DEP/DSWS is responsible for assessing and monitoring for LFG migration; specifically off-site methane migration beyond the property boundary and if

methane is accumulating in any on-site structures at the Gude Landfill. DEP/DSWS currently performs weekly monitoring for LFG migration along the northwest property boundary (approximately ¼ of the property boundary) that has previously experienced significant amounts LFG migration. The remainder of the property boundary primarily borders forested land or is bordered by surface water bodies; however, DEP/DSWS realizes that land use does not relieve the requirement for assessing LFG migration and LFG monitoring in these areas.

DEP/DSWS proposed a Bar Punch Study as an initial assessment to determine LFG concentrations and the potential for LFG migration along the Gude Landfill property boundary that does not currently have LFG monitoring wells. The Bar Punch Study will be performed by the Contractor (SCS Engineers) and will consist of: hammering an approximate 4-foot long metal rod into the ground at each bar punch location, removing the metal rod, and monitoring the hole with a LFG analyzer (LandTec GEM 2000) for the presence methane. There will be approximately 40 bar punch monitoring locations. The Bar Punch Study will be initiated within thirty (30) days of the original submission of the LFGMP to MDE.

Following the Bar Punch Study, DEP/DSWS will tabulate the monitoring data and forward the results to MDE.

Bar Punch Study Results

On behalf of DEP/DSWS, the Contractor (SCS Engineers) performed a Bar Punch Study along the perimeter property boundary and several other areas along the edge of waste at the closed Gude Landfill on March 3 – March 5, 2009. Bar Punch locations, recorded methane concentrations, and daily field logs by the Contractor are presented in Appendix F. A total of 44 Bar Punches with a varied depth of 2 to 4-feet below the ground surface (depending upon subsurface materials) were observed and recorded. A brief summary of the data is provided below:

- 17 Bar Punches recorded the presence of methane (BP #s: 09, 13, 20a, 21a, 22a, 23a, 23b, 25, 29a, 29b, 30a, 30b, 38, 39, 40, 43, 44).
- 7 of the 17 Bar Punches recorded significant concentrations of methane above 5.00% by volume (BP #s: 13, 20a, 21a, 22a, 23a, 29a, 44).
- 6 of the 7 Bar Punches that recorded significant concentrations of methane above 5.00% by volume were located along the property boundary (BP #s: 13, 20a, 21a, 22a, 23a, 29a).
- 3 of the 6 Bar Punches that recorded significant concentrations of methane above 5.00% by volume that were located along the property boundary are buffered by a natural water body (BP #s: 13, 20a, 21a).

Landfill Gas Monitoring Locations

Based on the results of the Bar Punch Study and MDE regulatory requirements for accessing the potential for LFG migration at the property boundary, DEP/DSWS is proposing to install 21 additional LFG monitoring wells along the Gude Landfill property boundary. The LFG

monitoring well locations are presented on the revised LFG Monitoring Plan in Appendix F. As noted on the LFG Monitoring Plan, there are two distinct areas of the Gude Landfill property boundary where DEP/DSWS is not proposing the installation of additional LFG monitoring wells. A brief summary of these two areas is provided below:

- Upper Northwest Property Boundary beyond LFG monitoring well #W09 – Due to site restrictions related to the Columbia Gas/Transco high-pressure natural gas right-of-way and proximity to Crabbs Branch Stream (e.g. a natural stream buffer that inhibits the migration of LFG), LFG monitoring wells are not proposed along the upper northwest property boundary of the Gude Landfill that borders Maryland-National Capital Park and Planning Commission property. However, DEP/DSWS proposes to install additional LFG monitoring wells along the fence line (that borders the natural gas right-of-way) just off the edge of waste similar to the existing LFG monitoring wells W03 through W09. These locations impose more stringent requirements on DEP/DSWS to control LFG migration at these locations.

- Southeast and Southwest Boundary – Due to the proximity to Southlawn Branch Stream (e.g. natural stream buffer) LFG monitoring wells are not proposed along portions of the southeast and southwest property boundary. Aside from the proximity to a natural stream buffer, these areas of the property boundary maintain significant terrain constraints that include slope and vegetative debris (trees) as well as the issue of performing work within a defined stream buffer.

DEP/DSWS will initiate the design and installation of the LFG monitoring wells within ninety (90) days of receipt of MDE's final approval of the LFGMP. A typical LFG monitoring well detail is also provided in Appendix F. Upon the complete installation of the LFG monitoring wells, DEP/DSWS will update the LFGMP for submission to MDE in accordance with Section 3.8.

3.4 MONITORING OF ON-SITE STRUCTURES

As required by MDE and COMAR, DEP/DSWS will assess LFG migration and monitor for the presence of methane gas in any existing and future on-site structures at the Gude Landfill. Monitoring personnel will walk through the structure with a LFG analyzer with an intake hose and monitor the perimeter wall interface of the structure, floor to wall interface in hallways and rooms of the structure, and any floor penetrations in the structure. The LFG monitoring of on-site structures will be performed on a quarterly basis.

Existing on-site structures include the Montgomery County Men's Shelter and recent redevelopment area, and the DSWS Former Power Plant Building. The DEP/DSWS LFGE Facility is currently in construction phase and will be located adjacent to the Former Power Plant Building. Future on-site structures may include office trailers and a maintenance building associated with the proposed DEP/DSWS Yard Trim Processing Facility to be located off of the Southlawn Lane access road to the Gude Landfill.

All on-site structures will be equipped with methane gas detectors.

3.5 MONITORING PROTOCOLS AND FREQUENCY

Prior to initiating a LFG monitoring event, monitoring personnel will record pertinent weather information. Via the use of a LFG analyzer, the following measurements will typically be recorded at each LFG monitoring well or on-site structure:

- Peak and Level methane concentrations (percent volume in air, or percent of the lower explosive limit)
- Oxygen, carbon dioxide, and balance gas concentration
- Subsurface pressure

The current Landfill Gas Monitoring Well Schedule with Monitoring Parameters is presented in Appendix E.

Concentrations of gases using a LFG analyzer at the LFG monitoring wells will be determined using the following sampling procedures:

1) The instrument will be calibrated per the manufacturer's recommendations, typically at a minimum of once each day of use.
2) The instrument will be turned on prior to connection to the quick connect sampling port of the monitoring well. The monitoring well pressure will typically be measured prior to any pumping.
3) The instrument's analyzer pump will be started and readings will be observed and recorded. Typically, two monitoring well volumes will be pumped and purged prior to recording measurements.
4) Peak readings for methane concentrations will be measured during the purging of two well volumes. Level readings will be measured for a three-five minute time interval following the well purging.

LFG monitoring frequencies are provided below:

- LFG monitoring will continue on a weekly basis by DEP for the LFG monitoring wells (W03-W09) along the northwest property boundary of the Gude Landfill. LFG monitoring may be decreased in frequency in accordance with Section 3.2 after a prolonged period with no methane gas exceedences.

  The Contractor (SCS Engineers) will perform LFG monitoring at these locations as part of the LFGMP requirements on a quarterly basis.

- LFG monitoring will be performed by the Contractor (SCS Engineers) for any new LFG monitoring wells along the property boundary of the Gude Landfill on a quarterly basis.

- LFG monitoring will be performed by the Contractor (SCS Engineers) for any existing and future on-site structures at the Gude Landfill on a quarterly basis.

The Landfill Gas Monitoring and Reporting Summary is presented in Appendix G.

3.6 DETECTIONS AND EXCEEDENCES

If methane concentrations are detected above 1.25 percent by volume in on-site structures at the Gude Landfill or above 5.00 percent by volume at the property boundary, DEP/DSWS will: notify MDE, perform a site investigation, provide MDE monitoring data related to the exceedence, and propose appropriate corrective actions.

Corrective actions may include the installation of permanent LFG monitoring wells or the installation of LFG extraction wells with lateral connections to the existing LFG collection system. Typical LFG extraction well details are presented in Appendix B and typical monitoring well drilling logs are presented in Appendix D.

3.7 NOTIFICATION AND REPORTING

The quarterly LFG monitoring and reporting will begin the first full quarter following MDE's final approval of the LFGMP or the construction of any new LFG monitoring wells. Notification will be in accordance with Sections 1.3 and 3.6 of the LFGMP. Reporting frequencies for LFG monitoring is provided below:

- The LFG monitoring results performed by the Contractor (SCS Engineers) for the LFG monitoring wells along the northwest property boundary of the Gude Landfill will be provided to MDE on a quarterly basis.
- The LFG monitoring results performed by the Contractor (SCS Engineers) for any new LFG monitoring wells along the property boundary of the Gude Landfill will be provided to MDE on a quarterly basis.
- The LFG monitoring results performed by the Contractor (SCS Engineers) for any existing and future on-site structures at the Gude Landfill property boundary will be provided to MDE on a quarterly basis.

The Landfill Gas Monitoring and Reporting Summary is presented in Appendix G. LFG monitoring results will be tabulated in a summary report and provided to MDE within thirty (30) days following the completion of the quarterly monitoring.

The monitoring frequency for the LFG monitoring wells shall be at least quarterly unless written approval is obtained from MDE to reduce the frequency. If methane exceedences are below the regulatory limits as identified in Section 1.3 and 3.6 of this LFGMP after four quarters of consistent monitoring, DEP/DSWS may request to MDE that the monitoring frequency be reduced to six-month regularity, with the exception of the LFG monitoring wells along the northwest property boundary that will be monitored as noted in Section 3.2 and 3.5.

3.8 REVISIONS TO PLAN

DEP/DSWS will update the LFG Monitoring Plan to reflect the addition of any new monitoring wells, LFG extraction wells, or other pertinent modifications to the LFG monitoring and collection system. If there are modifications, DEP/DSWS will forward MDE a revised copy of the LFGMP by the end of each calendar year.

APPENDIX A

SITE LOCATION MAP

Gude Landfill
(with 2006 Orthophotos)

600 E. Gude Drive
Derwood, MD 20850

Division of Solid Waste Services
Department of Public Works
and Transportation
Montgomery County, Maryland

February 14, 2008

Legend

- Solid Waste Facilities
- Parks
- Water Bodies
- Property Lots
- Roads
- Buildings

Scale

0 375 750 1,500 Feet

Locator Box

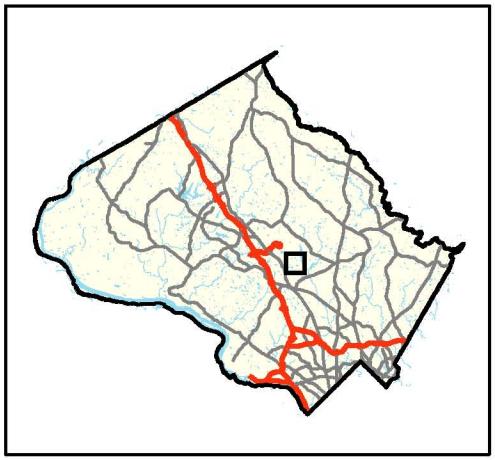

APPENDIX B

LANDFILL GAS COLLECTION SYSTEM AS-BUILTS

GUDE LANDFILL

MONTGOMERY COUNTY, MARYLAND

LANDFILL GAS SYSTEM

DRAWING INDEX

1. TITLE SHEET
2. LFG SYSTEM MASTER PLAN
3. LFG SYSTEM NORTHWEST HEADER PLAN
4. LFG SYSTEM DETAILS (1)
5. LFG SYSTEM DETAILS (2)

Gude Landfill
(with 2006 Orthophotos)

600 E. Gude Drive
Derwood, MD 20850

Division of Solid Waste Services
Department of Public Works
and Transportation
Montgomery County, Maryland
February 14, 2008

Legend

- Solid Waste Facilities
- Parks
- Water Bodies
- Property Lots
- Roads
- Buildings

NO.	REVISION	DATE

SHEET TITLE: TITLE SHEET

PROJECT TITLE: GUDE LANDFILL LANDFILL GAS SYSTEM

CLIENT: MONTGOMERY COUNTY DPWT/DSWS 16101 FREDERICK ROAD DERWOOD, MARYLAND 20855

SCS ENGINEERS
STEARNS, CONRAD AND SCHMIDT CONSULTING ENGINEERS, INC.
11260 ROGER BACON DRIVE - RESTON, VA 20190
PH. (703) 471-6150 FAX. (703) 471-6676

PROJ. NO. 02203039.07 | DWN. BY: DJD | Q/A R/W BY: MAK
DSN. BY: DJD | CHK. BY: MAK | APP. BY: MAK

CADD FILE: 1 TITLE

DATE: 9.18.08

SCALE: AS SHOWN

DRAWING NO. 1 of 5

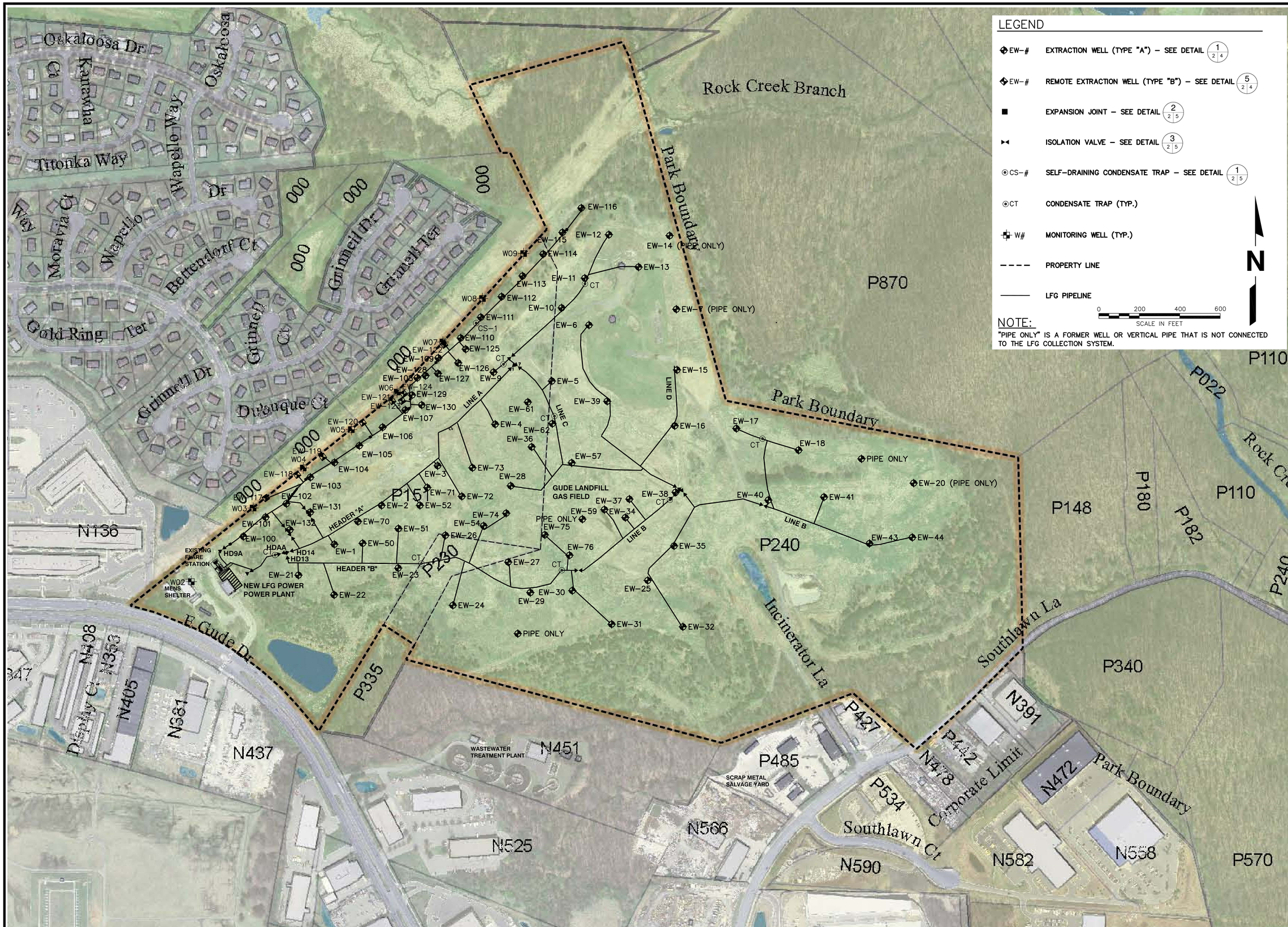

NO.	REVISION	DATE

SHEET TITLE
LFG SYSTEM MASTER PLAN

PROJECT TITLE
GUDE LANDFILL
LANDFILL GAS SYSTEM

CLIENT
MONTGOMERY COUNTY
DPWT/DSWS
16101 FREDERICK ROAD
DERWOOD, MARYLAND 20855

SCS ENGINEERS
STEARNS, CONRAD AND SCHMIDT
CONSULTING ENGINEERS, INC.
11260 ROGER BACON DRIVE - RESTON, VA 20190
PH. (703) 471-6150 FAX. (703) 471-6676

PROJ. NO. 02203039.07 | DWN. BY: MAK/DJD | S/A RVW BY: MAK
DSN. BY: MAK | CHK. BY: MAK | APP. BY: MAK

CADD FILE: 2 LFG SYSTEM

DATE: 2.2.09

SCALE: AS SHOWN

DRAWING NO. **2** of **5**

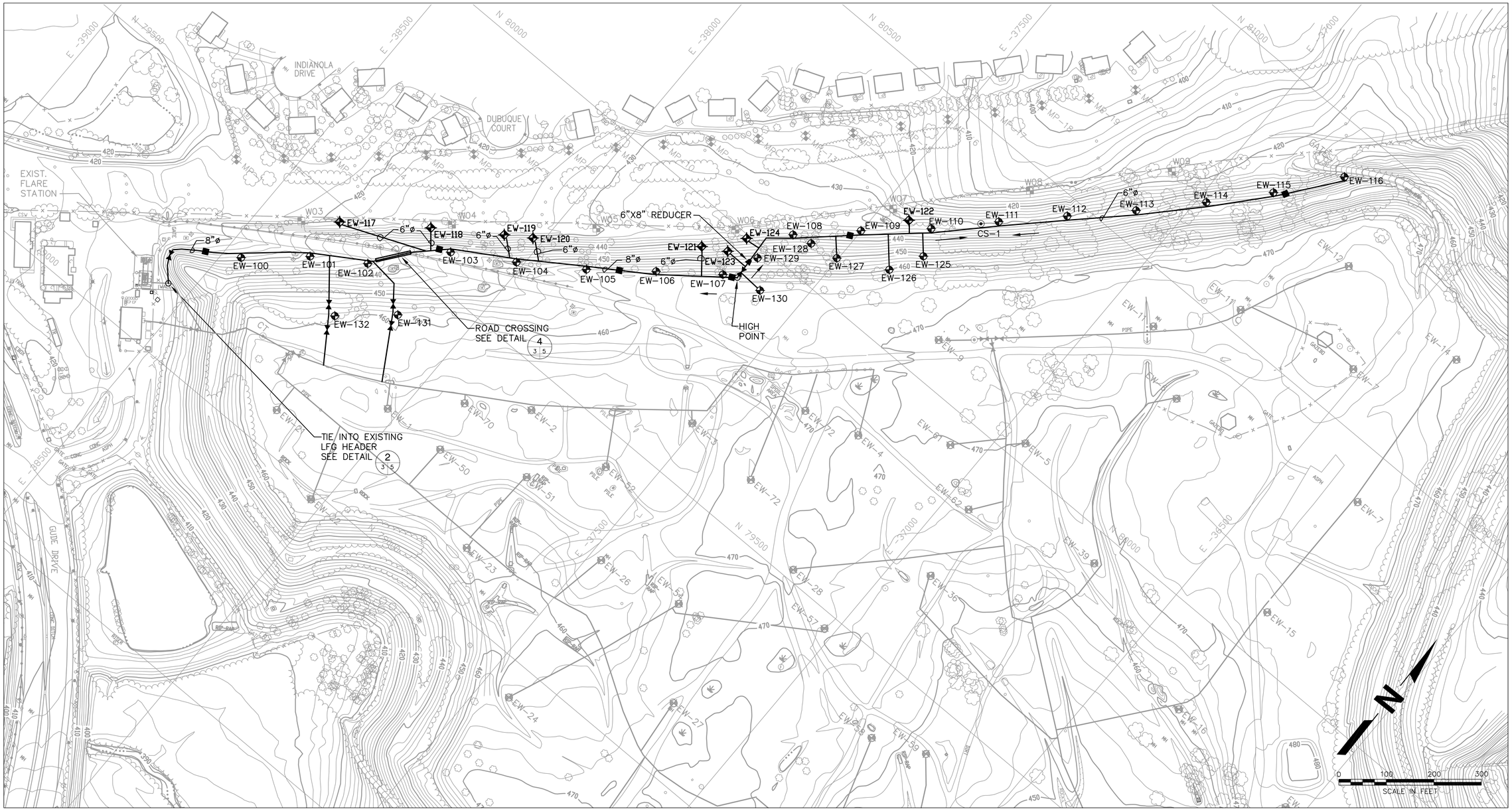

NORTHWEST HEADER AS-BUILT

LEGEND

- EW-# — NEW EXTRACTION WELL (TYPE "A") – SEE DETAIL 1 / 3 4
- EW-# — NEW REMOTE EXTRACTION WELL (TYPE "B") – SEE DETAIL 5 / 3 4
- NEW EXPANSION JOINT – SEE DETAIL 2 / 3 5
- NEW ISOLATION VALVE – SEE DETAIL 3 / 3 5
- CS-# — NEW SELF-DRAINING CONDENSATE TRAP – SEE DETAIL 1 / 3 5

WELL SCHEDULE

WELL NO.	TOTAL WELL DEPTH (FT)	SLOTTED PIPE LENGTH (FT)	SOLID PIPE LENGTH (FT)	WELL TYPE "A" OR "B"	WELL NO.	TOTAL WELL DEPTH (FT)	SLOTTED PIPE LENGTH (FT)	SOLID PIPE LENGTH (FT)	WELL TYPE "A" OR "B"	WELL NO.	TOTAL WELL DEPTH (FT)	SLOTTED PIPE LENGTH (FT)	SOLID PIPE LENGTH (FT)	WELL TYPE "A" OR "B"	WELL NO.	TOTAL WELL DEPTH (FT)	SLOTTED PIPE LENGTH (FT)	SOLID PIPE LENGTH (FT)	WELL TYPE "A" OR "B"
EW-100	31	9	26	A	EW-109	29	14	17	A	EW-118	25	10	17	B	EW-127	45	15	30	A
EW-101	46	22	26	A	EW-110	37	13	26	A	EW-119	27	10	17	B	EW-128	40	15	25	A
EW-102	39	15	26	A	EW-111	45	21	26	A	EW-120	25	12	12	B	EW-129	40	15	25	A
EW-103	42	18	26	A	EW-112	46	24	26	A	EW-121	25	12	12	B	EW-130	45	15	30	A
EW-104	47	23	26	A	EW-113	46	24	26	A	EW-122	20	8	11	B	EW-131	52	15	37	A
EW-105	53	29	26	A	EW-114	39	15	26	A	EW-123	25	10	15	B	EW-132	52	15	37	A
EW-106	52	28	26	A	EW-115	35	11	26	A	EW-124	25	10	15	B					
EW-107	53	29	26	A	EW-116	35	11	26	A	EW-125	50	15	35	A					
EW-108	27	12	17	A	EW-117	25	10	17	B	EW-126	35	15	20	A					

NO.	REVISION	DATE

SHEET TITLE: LFG SYSTEM NORTHWEST HEADER PLAN

PROJECT TITLE: GUDE LANDFILL LANDFILL GAS SYSTEM

CLIENT: MONTGOMERY COUNTY DPWT/DSWS 16101 FREDERICK ROAD DERWOOD, MARYLAND 20855

SCS ENGINEERS
STEARNS, CONRAD AND SCHMIDT CONSULTING ENGINEERS, INC.
11260 ROGER BACON DRIVE - RESTON, VA 20190
PH. (703) 471-6150 FAX. (703) 471-6676

PROJ. NO. 02203039.07 | DSN. BY: BJD | DWN. BY: BJD/DJD | CHK. BY: DDD | Q/A RVW BY: MAK | APP. BY: MAK

CADD FILE: 3 LFG HEADER

DATE: 9.18.08

SCALE: 1" = 100'

DRAWING NO. 3 of 5

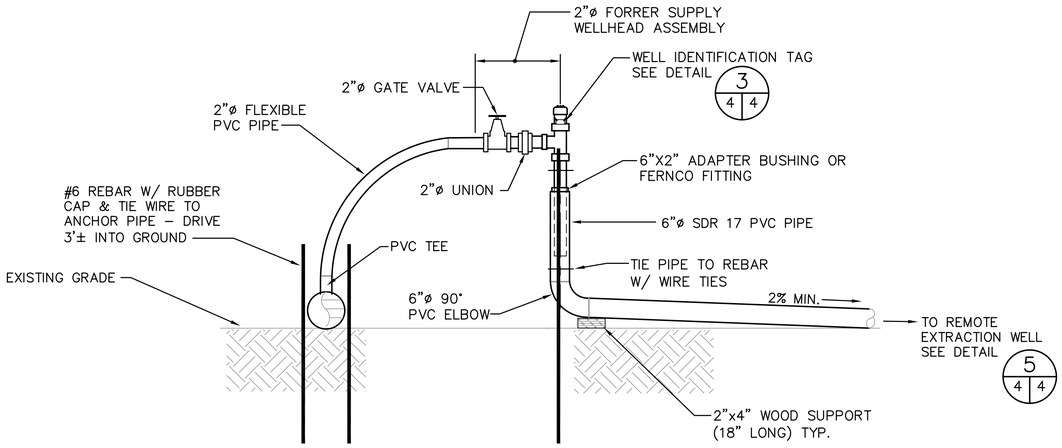

REMOTE WELLHEAD DETAIL 2 | 4 4
N.T.S.

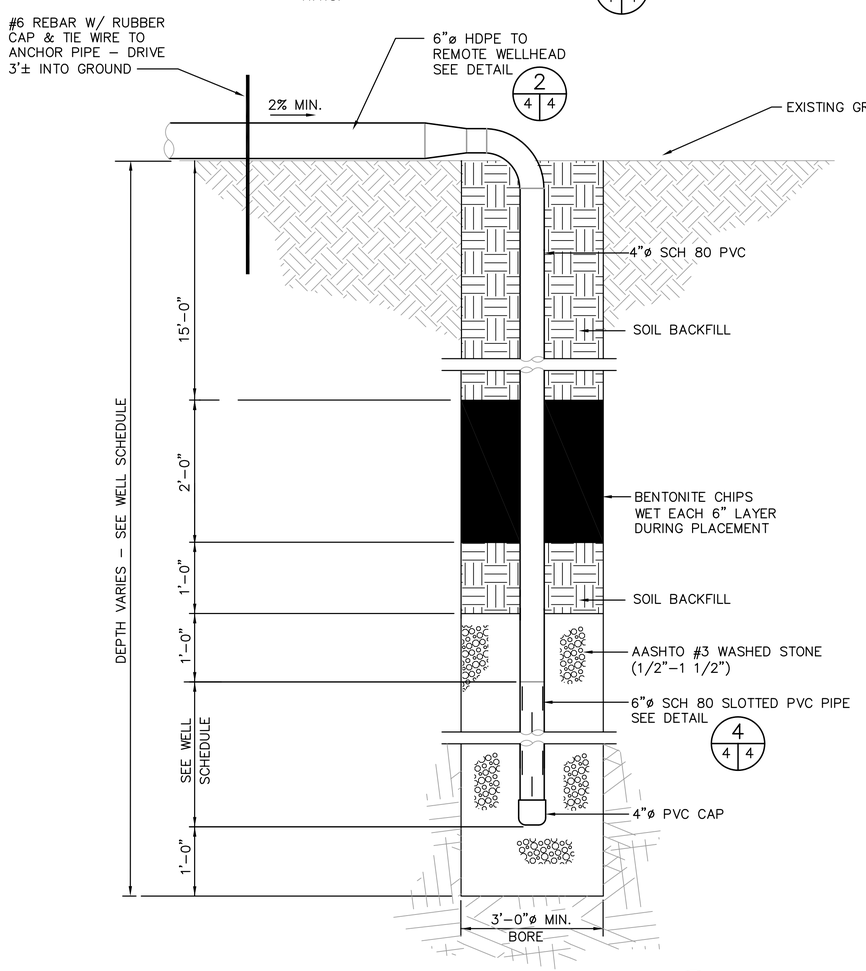

REMOTE EXTRACTION WELL DETAIL 5 | 2,3 4 | 4
N.T.S.

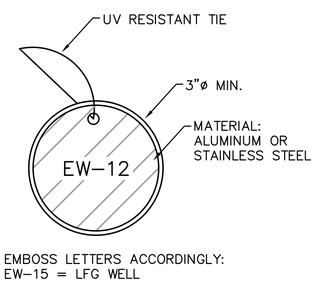

IDENTIFICATION TAG DETAIL 3 | 4 4
N.T.S

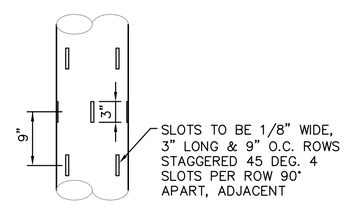

SLOTTED PIPE DETAIL 4 | 4 4
N.T.S.

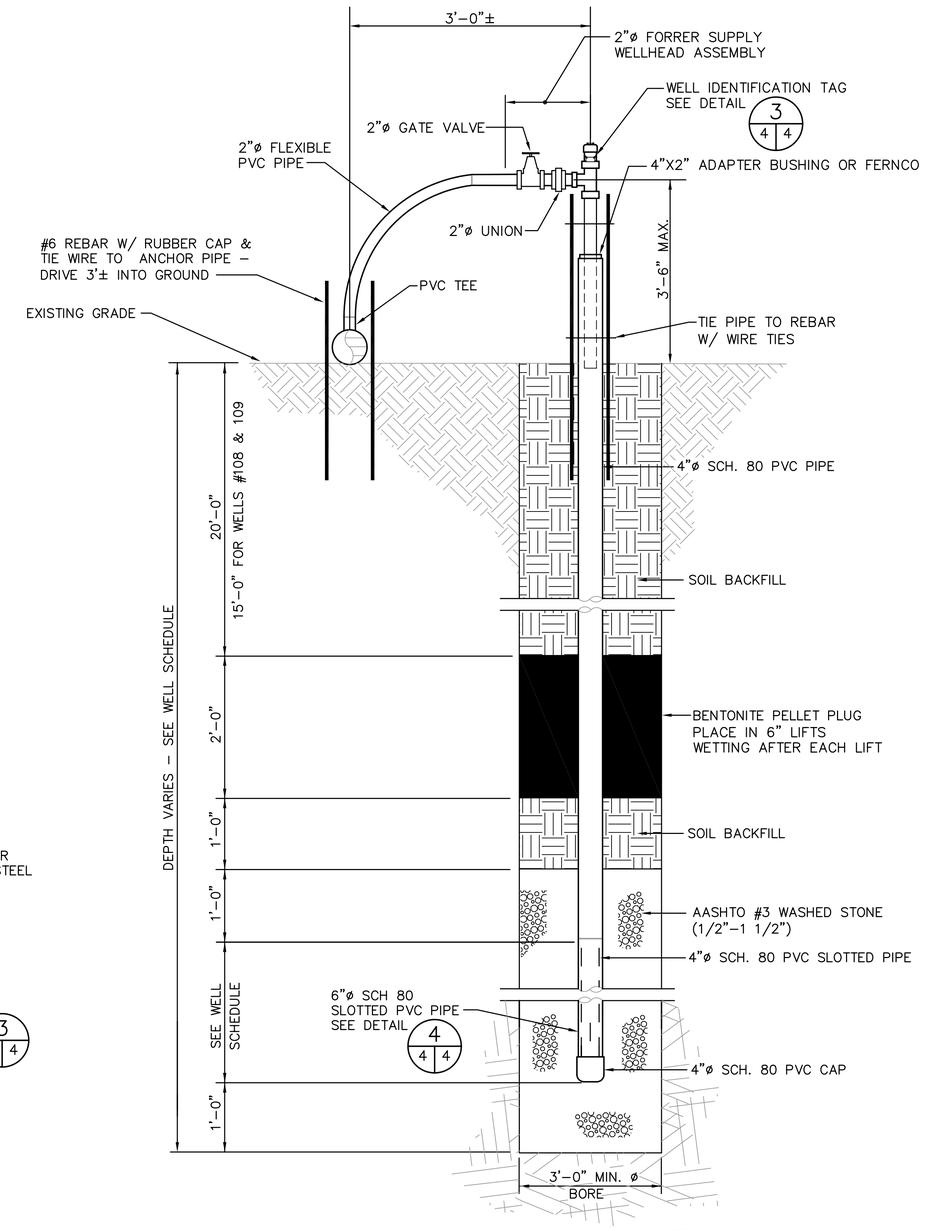

EXTRACTION WELL DETAIL 1 | 2,3 4 | 4
SCALE: 1"=1'–0"

DETAILS AS–BUILT

NO.	REVISION	DATE

SHEET TITLE
LFG SYSTEM DETAILS (1)

PROJECT TITLE
GUDE LANDFILL LANDFILL GAS SYSTEM

CLIENT
MONTGOMERY COUNTY
DPWT/DSWS
16101 FREDERICK ROAD
DERWOOD, MARYLAND 20855

SCS ENGINEERS
STEARNS, CONRAD AND SCHMIDT
CONSULTING ENGINEERS, INC.
11260 ROGER BACON DRIVE - RESTON, VA 20190
PH. (703) 471-6150 FAX. (703) 471-6676

PROJ. NO. 02203039.07 | DWN. BY: MAK/DJD | Q/A RVW BY: MAK
DSN. BY: MAK | CHK. BY: MAK | APP. BY: MAK

CADD FILE: 4–5 DETAILS
DATE: 9.18.08
SCALE: AS SHOWN
DRAWING NO.
4 of **5**

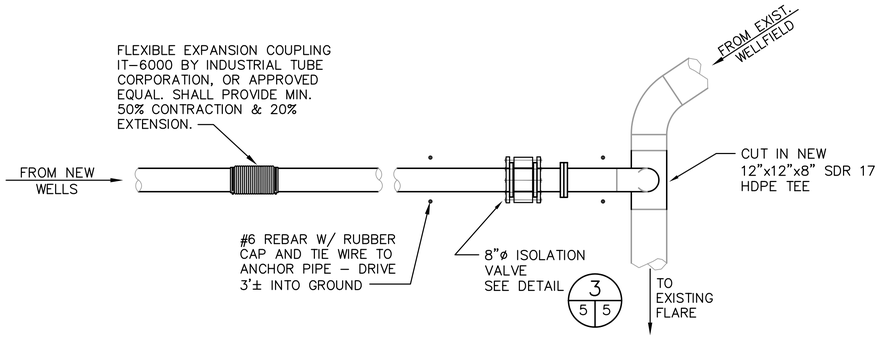

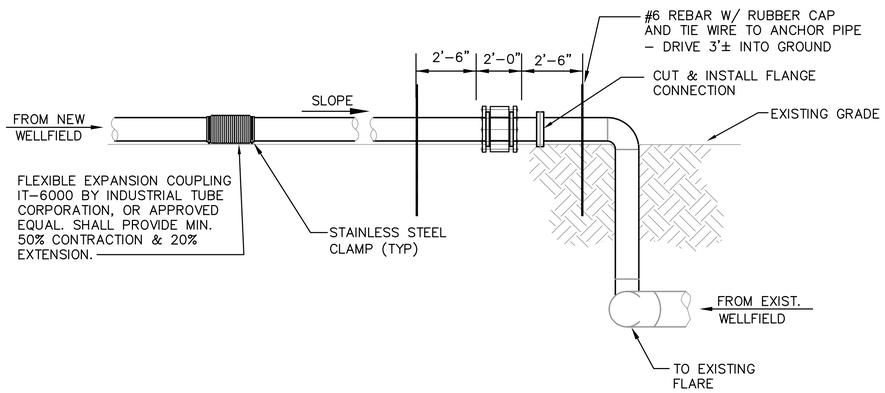

TIE IN NEW HEADER TO EXISTING DETAIL 2 (3 | 5)
N.T.S.

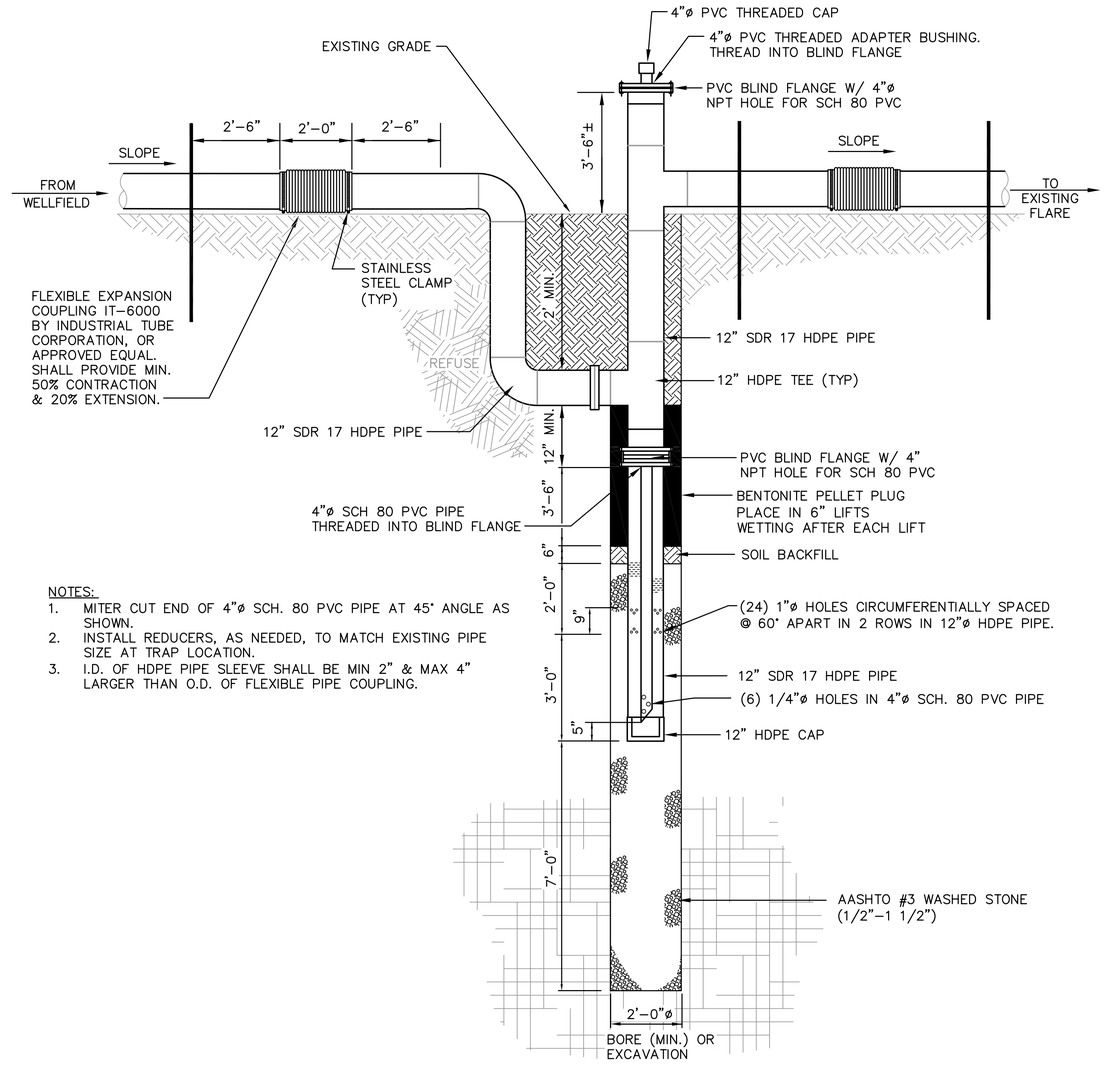

NOTES:
1. MITER CUT END OF 4"ø SCH. 80 PVC PIPE AT 45° ANGLE AS SHOWN.
2. INSTALL REDUCERS, AS NEEDED, TO MATCH EXISTING PIPE SIZE AT TRAP LOCATION.
3. I.D. OF HDPE PIPE SLEEVE SHALL BE MIN 2" & MAX 4" LARGER THAN O.D. OF FLEXIBLE PIPE COUPLING.

SELF DRAINING CONDENSATE TRAP 1 (2,3 | 5)
N.T.S.

NOTE:
CONTRACTOR SHALL RESTORE ACCESS ROAD TO MATCH ORIGINAL CONDITIONS.

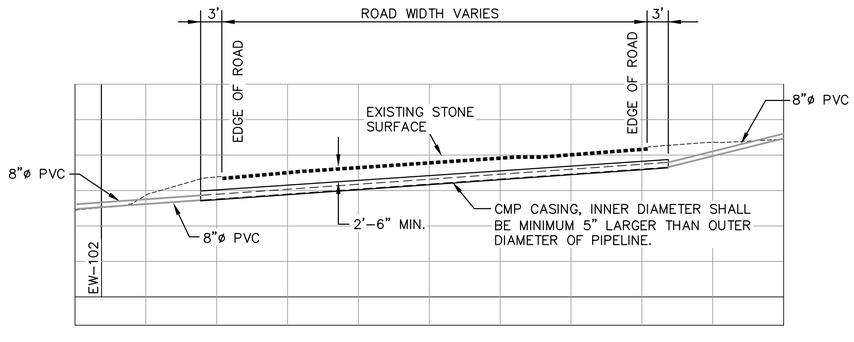

ROAD CROSSING DETAIL 4 (3 | 5)
N.T.S.

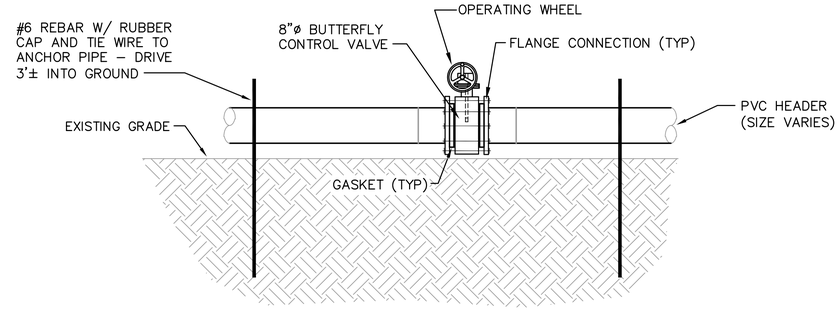

ABOVEGROUND ISOLATION VALVE DETAIL 3 (2,3,4 | 5)
N.T.S.

DETAILS AS–BUILT

NO.	REVISION	DATE

SHEET TITLE
LFG SYSTEM DETAILS (2)

PROJECT TITLE
GUDE LANDFILL
LANDFILL GAS SYSTEM

CLIENT
MONTGOMERY COUNTY
DPWT/DSWS
16101 FREDERICK ROAD
DERWOOD, MARYLAND 20855

SCS ENGINEERS
STEARNS, CONRAD AND SCHMIDT
CONSULTING ENGINEERS, INC.
11260 ROGER BACON DRIVE - RESTON, VA 20190
PH. (703) 471-6150 FAX. (703) 471-6676

PROJ. NO. 02203039.07 | DSN. BY: MAK | DWN. BY: MAK/DJD | CHK. BY: MAK | Q/A RVW BY: MAK | APP. BY: MAK

CADD FILE: 4–5 DETAILS
DATE: 9.18.08
SCALE: N.T.S.
DRAWING NO. 5 of 5

APPENDIX C

LANDFILL GAS COLLECTION SYSTEM WELL SCHEDULE

GUDE LANDFILL
LANDFILL GAS COLLECTION SYSTEM
WELL SCHEDULE

GEM ID	Well ID	Comment
Interior Extraction Wells (EW)		
GUDEEW01	EW-001	
GUDEEW02	EW-002	
GUDEEW03	EW-003	
GUDEEW04	EW-004	
GUDEEW05	EW-005	
GUDEEW06	EW-006	
GUDEEW07	EW-007*	See Note 1
GUDEEW08	EW-008**	See Note 2
GUDEEW09	EW-009	
GUDEEW10	EW-010	
GUDEEW11	EW-011	
GUDEEW12	EW-012	
GUDEEW13	EW-013	
GUDEEW14	EW-014*	See Note 1
GUDEEW15	EW-015	
GUDEEW16	EW-016	
GUDEEW17	EW-017	
GUDEEW18	EW-018	
GUDEEW19	EW-019**	See Note 2
GUDEEW20	EW-020*	See Note 1
GUDEEW21	EW-021	
GUDEEW22	EW-022	
GUDEEW23	EW-023	
GUDEEW24	EW-024	
GUDEEW25	EW-025	
GUDEEW26	EW-026	
GUDEEW27	EW-027	
GUDEEW28	EW-028	
GUDEEW29	EW-029	
GUDEEW30	EW-030	
GUDEEW31	EW-031	
GUDEEW32	EW-032	
GUDEEW33	EW-033**	See Note 2
GUDEEW34	EW-034	
GUDEEW35	EW-035	
GUDEEW36	EW-036	
GUDEEW37	EW-037	
GUDEEW38	EW-038	
GUDEEW39	EW-039	
GUDEEW40	EW-040	
GUDEEW41	EW-041	
GUDEEW42	EW-042**	See Note 2
GUDEEW43	EW-043	
GUDEEW44	EW-044	
GUDEEW45	EW-045**	See Note 2
GUDEEW46	EW-046**	See Note 2
GUDEEW47	EW-047**	See Note 2
GUDEEW48	EW-048**	See Note 2
GUDEEW49	EW-049**	See Note 2

GUDE LANDFILL
LANDFILL GAS COLLECTION SYSTEM
WELL SCHEDULE

GEM ID	Well ID	Comment
GUDEEW50	EW-050	
GUDEEW51	EW-051	
GUDEEW52	EW-052	
GUDEEW53	EW-053**	See Note 2
GUDEEW54	EW-054	
GUDEEW55	EW-055**	See Note 2
GUDEEW56	EW-056**	See Note 2
GUDEEW57	EW-057	
GUDEEW58	EW-058**	See Note 2
GUDEEW59	EW-059	
GUDEEW60	EW-060**	See Note 2
GUDEEW61	EW-061**	See Note 2
GUDEEW62	EW-062	
GUDEEW63	EW-063**	See Note 2
GUDEEW64	EW-064**	See Note 2
GUDEEW65	EW-065**	See Note 2
GUDEEW66	EW-066**	See Note 2
GUDEEW67	EW-067**	See Note 2
GUDEEW68	EW-068**	See Note 2
GUDEEW69	EW-069**	See Note 2
GUDEEW70	EW-070	
GUDEEW71	EW-071	
GUDEEW72	EW-072	
GUDEEW73	EW-073	
GUDEEW74	EW-074	
GUDEEW75	EW-075	
GUDEEW76	EW-076	
Migration Extraction Wells (EW)		
GUDEW100	EW-100	
GUDEW101	EW-101	
GUDEW102	EW-102	
GUDEW103	EW-103	
GUDEW104	EW-104	
GUDEW105	EW-105	
GUDEW106	EW-106	
GUDEW107	EW-107	
GUDEW108	EW-108	
GUDEW109	EW-109	
GUDEW110	EW-110	
GUDEW111	EW-111	
GUDEW112	EW-112	
GUDEW113	EW-113	
GUDEW114	EW-114	
GUDEW115	EW-115	
GUDEW116	EW-116	
GUDEW117	EW-117	
GUDEW118	EW-118	
GUDEW119	EW-119	
GUDEW120	EW-120	
GUDEW121	EW-121	

GUDE LANDFILL
LANDFILL GAS COLLECTION SYSTEM
WELL SCHEDULE

GEM ID	Well ID	Comment
GUDEW122	EW-122	
GUDEW123	EW-123	
GUDEW124	EW-124	
GUDEW125	EW-125	
GUDEW126	EW-126	
GUDEW127	EW-127	
GUDEW128	EW-128	
GUDEW129	EW-129	
GUDEW130	EW-130	
GUDEW131	EW-131	
GUDEW132	EW-132	

Notes:

1. Interior Extraction Wells (EW) denoted with * are capped and disconnected (e.g. pipe only) from the landfill gas collection system and are no longer used for landfill gas collection. There are also other disconnected, stand alone vertical pipes that are capped in the landfill gas well field, which are labled as "pipe only" on the As-Built drawings.

2. Interior Extraction Wells (EW) denoted with ** are presented to note numeric gaps in the landfill gas collection system well schedule (e.g. the well never existed in the landfill gas collection system).

APPENDIX D

LANDFILL GAS MONITORING WELL

DRILLING LOGS

SCS ENGINEERS

Project Name:	Gude Landfill			Log of Well:	GUDEW03
SCS Project Number:	2202039.30				
Logged/Checked by:	D. de Bastos	Coordinates (N/E):		Boring Diameter:	9"0
Drilling Method:	H.S.A	Surface Elevation:		Stick Up:	3'
Drilling Contractor:	Summit	Top of Casing Elev.:		Riser Length:	34'/21'/11'
Date Started:	9/29/2005	Pipe Material/Diameter:	3/4" PVC	Screened Length:	5'
Date Completed:	10/3/2005	Total Depth Drilled:	38'		

Depth (ft)	DRILLING LOG	WELL CONSTRUCTION	WELL CONSTRUCTION LOG
1	1-2'--Brown silt with traces of sand		
2	2-7'--Brown reddish silty clay		2-3'--Backfill
3			3-4'--Bentonite seal
4			4-14'--Gravel
5		5	5
6			
7			
8	7-20'--Brown fine silty sand		
9			
10		10	10
11			
12			
13			Bottom of screen
14			14-16'--Bentonite seal
15		15	15
16			16-25'--Gravel
17			
18			
19			
20		20	20
21	20-25'--Dark brown fine silty sand		
22			
23			Bottom of screen
24			
25		25	25 25-27'--Bentonite seal
26	25-30'--Dark brown moist silty clay		
27			27-38'--Gravel
28			
29			
30		30	30
31	30-36'--Grey wet silty clay		
32			
33			
34			
35		35	35
36			Bottom of screen
37	Water		
38			
39			
40		40	40
41			
42			
43			
44			
45		45	45
46			
47			
48			
49			
50		50	50
51			
52			
53			
54			
55		55	55
56			
57			
58			
59			
60		60	60

KEY

Bentonite seal -

PVC Screen -

SCS ENGINEERS

Project Name:	Gude Landfill			Log of Well:	GUDEW04
SCS Project Number:	2202039.30				
Logged/Checked by:	D. de Bastos	Coordinates (N/E):		Boring Diameter:	9"0
Drilling Method:	H.S.A	Surface Elevation:		Stick Up:	3'
Drilling Contractor:	Summit	Top of Casing Elev.:		Riser Length:	36'/26'/13'
Date Started:	9/29/2005	Pipe Material/Diameter:	3/4" PVC	Screened Length:	5'
Date Completed:	10/3/2005	Total Depth Drilled:	38'		

Depth (ft)	DRILLING LOG	WELL CONSTRUCTION	WELL CONSTRUCTION LOG
1	1-5'--Brown silt with traces of sand		1-3'--Backfill
2			
3			
4			3-4'--Bentonite seal
5		5	4-14'--Gravel
6	5-10'--Brown reddish silty sand		
7			
8			
9			
10		10	
11	10-23'--Brown fine silty sand		
12			
13			
14			
15		15	Bottom of screen
16			
17			
18			17-18'--Bentonite seal
19			
20		20	
21			
22			
23			
24	23-30'--Brown reddish fine silt		
25		25	
26			
27			
28			Bottom of screen
29			
30		30	
31	30-35'--Brown reddish silt with some clay		30-31'--Bentonite seal
32			
33			
34			
35		35	
36	35-38'--Brown reddish wet silty clay		
37			
38			Bottom of screen
39			
40		40	
41			
42			
43			
44			
45		45	
46			
47			
48			
49			
50		50	
51			
52			
53			
54			
55		55	
56			
57			
58			
59			
60		60	

KEY

Bentonite seal -

PVC Screen -

SCS ENGINEERS

Project Name:	Gude Landfill			Log of Well:	GUDEW05
SCS Project Number:	2202039.30				
Logged/Checked by:	D. de Bastos	Coordinates (N/E):		Boring Diameter:	9"0
Drilling Method:	H.S.A	Surface Elevation:		Stick Up:	3'
Drilling Contractor:	Summit	Top of Casing Elev.:		Riser Length:	34'/24'/11'
Date Started:	9/29/2005	Pipe Material/Diameter:	3/4" 0 PVC	Screened Length:	5'
Date Completed:	10/3/2005	Total Depth Drilled:	38'		

Depth (ft)	DRILLING LOG	WELL CONSTRUCTION	WELL CONSTRUCTION LOG
1	1-3'--Black silt		1-3'--Backfill
2			
3			
4	3-8'--Black silt and some clay with plastic		3-4'--Bentonite seal
5		5	4-14'--Gravel
6			
7			
8			
9	8-12'--Light Brown fine silt with traces of sand		
10		10	10
11			
12			
13	12-14'--Reddish brown silt with traces of sand and plastic		Bottom of screen
14			
15	14-18'--Reddish brown silt with traces of sand	15	15 15-16'--Bentonite seal
16			16-26'--Gravel
17			
18			
19	18-25'--Reddish brown silt with traces of sand and rocks		
20		20	20
21			
22			
23			
24			
25		25	25
26	25-30'--Brown silt with traces of clay and rocks		Bottom of screen
27			
28			28-29'--Bentonite seal
29			29-38'--Gravel
30		30	30
31	30-38'--Greyish brown silt with some sand		
32			
33			
34			
35		35	35
36			Bottom of screen
37			
38			
39			
40		40	40
41			
42			
43			
44			
45		45	45
46			
47			
48			
49			
50		50	50
51			
52			
53			
54			
55		55	55
56			
57			
58			
59			
60		60	60

KEY

Bentonite seal -

PVC Screen -

SCS ENGINEERS

Project Name:	Gude Landfill			Log of Well:	GUDEW06
SCS Project Number:	2202039.30				
Logged/Checked by:	D. de Bastos	Coordinates (N/E):		Boring Diameter:	9"0
Drilling Method:	H.S.A	Surface Elevation:		Stick Up:	3'
Drilling Contractor:	Summit	Top of Casing Elev.:		Riser Length:	32'/23'/11'
Date Started:	9/29/2005	Pipe Material/Diameter:	3/4" 0 PVC	Screened Length:	5'
Date Completed:	10/3/2005	Total Depth Drilled:	34'		

Depth (ft)	DRILLING LOG	WELL CONSTRUCTION	WELL CONSTRUCTION LOG
1	1-3'--Black silt with some sand		1-3'--Backfill
2			
3			
4	3-25'--Reddish brown course sand with traces of clay		3-4'--Bentonite seal
5		5	4-15'--Gravel
6			
7			
8			
9			
10		10	
11			
12			
13			Bottom of screen
14			
15		15	
16			15-16'--Bentonite seal
17			16-27'--Gravel
18			
19			
20		20	
21			
22			
23			
24			
25		25	Bottom of screen
26	25-35'--Brown sand with some silt		
27			27-28'--Bentonite seal
28			28-34'--Gravel
29			
30		30	
31			
32			
33			
34			Bottom of screen
35		35	
36	Solid rock		
37			
38			
39			
40		40	
41			
42			
43			
44			
45		45	
46			
47			
48			
49			
50		50	
51			
52			
53			
54			
55		55	
56			
57			
58			
59			
60		60	

KEY

Bentonite Seal -

PVC Screen -

SCS ENGINEERS

Project Name:	Gude Landfill			Log of Well:	GUDEW07
SCS Project Number:	2202039.30				
Logged/Checked by:	D. de Bastos	Coordinates (N/E):		Boring Diameter:	9"0
Drilling Method:	H.S.A	Surface Elevation:		Stick Up:	3'
Drilling Contractor:	Summit	Top of Casing Elev.:		Riser Length:	21'/10'
Date Started:	9/29/2005	Pipe Material/Diameter:	3/4" 0 PVC	Screened Length:	5'
Date Completed:	10/3/2005	Total Depth Drilled:	27'		

Depth (ft)	DRILLING LOG	WELL CONSTRUCTION	WELL CONSTRUCTION LOG
1	1-3'--Brown silt with some sand		1-3'--Backfill
2			
3			
4	3-5'--Dark brown silt with some sand		3-4'--Bentonite seal
5		5	4-14'--Gravel
6	5-8'-- Greyish brown silty sand and rocks		
7			
8			
9	8-13'--Brown course sand with traces of silt		
10		10	
11			
12			Bottom of screen
13			
14	13-27'--Greyish brown silty sand		
15		15	14-15'--Bentonite seal
16			15-27'--Gravel
17			
18			
19			
20		20	
21			
22			
23			Bottom of screen
24			
25		25	
26			
27			
28	Solid Rock		
29			
30		30	
31			
32			
33			
34			
35		35	
36			
37			
38			
39			
40		40	
41			
42			
43			
44			
45		45	
46			
47			
48			
49			
50		50	
51			
52			
53			
54			
55		55	
56			
57			
58			
59			
60		60	

KEY

Bentonite seal -

PVC Screen -

SCS ENGINEERS

Project Name:	Gude Landfill			Log of Well:	GUDEW08
SCS Project Number:	2202039				
Logged/Checked by:	D. de Bastos	Coordinates (N/E):		Boring Diameter:	9"0
Drilling Method:	H.S.A	Surface Elevation:		Stick Up:	3'
Drilling Contractor:	Summit	Top of Casing Elev.:		Riser Length:	33'/23'/11'
Date Started:	9/29/2005	Pipe Material/Diameter:	3/4" 0 PVC	Screened Length:	5'
Date Completed:	10/3/2005	Total Depth Drilled:	39'		

Depth (ft)	DRILLING LOG	WELL CONSTRUCTION	WELL CONSTRUCTION LOG
1	1-8'--Brown silt with some sand		1-3'--Backfill
2			
3			
4			3-4'--Bentonite seal
5		5	5 4-15'--Gravel
6			
7			
8			
9	8-13'--Reddish brown silty sand with traces of clay		
10		10	10
11			
12			
13			Bottom of screen
14	13-18'--Light brown silt with some sand		
15		15	15 15-16'--Bentonite seal
16			16-27'--Gravel
17			
18			
19	18-23'--Dark brown silt with some sand		
20		20	20
21			
22			
23			
24	23-35'--Brown silt with some clay		
25		25	25 Bottom of screen
26			
27			27-28'--Bentonite seal
28			28-40'--Gravel
29			
30		30	30
31			
32			
33			
34			
35		35	35 Bottom of screen
36	35-39'--Brown wet silt with some clay		
37			
38			
39			
40	Ground water	40	40
41			
42			
43			
44			
45		45	45
46			
47			
48			
49			
50		50	50
51			
52			
53			
54			
55		55	55
56			
57			
58			
59			
60		60	60

KEY

Bentonite seal -

PVC Screen -

SCS ENGINEERS

Project Name:	Gude Landfill			Log of Well:	GUDEW09
SCS Project Number:	2202039.30				
Logged/Checked by:	D. de Bastos	Coordinates (N/E):		Boring Diameter:	9"0
Drilling Method:	H.S.A	Surface Elevation:		Stick Up:	3'
Drilling Contractor:	Summit	Top of Casing Elev.:		Riser Length:	34'/26'/12'
Date Started:	9/29/2005	Pipe Material/Diameter:	3/4" 0 PVC	Screened Length:	5'
Date Completed:	10/3/2005	Total Depth Drilled:	38'		

Depth (ft)	DRILLING LOG	WELL CONSTRUCTION	WELL CONSTRUCTION LOG
1	1-3'--Brown silt with some sand		1-2'--Backfill
2			
3			2-3'--Bentonite seal
4	3-8'--Reddish brown silt with some sand and traces of clay		3-16'--Gravel
5		5	5
6			
7			
8			
9	8-38'--Brown fine silty sand		
10		10	10
11			
12			
13			
14			Bottom of screen
15		15	15
16			
17			16-17'--Bentonite seal
18			17-30'--Gravel
19			
20		20	20
21			
22			
23			
24			
25		25	25
26			
27			
28			Bottom of screen
29			
30		30	
31			30-31'--Bentonite seal
32			31-38'--Gravel
33			
34			
35		35	35
36	35-38'--Brown wet silt with some clay		Bottom of screen
37			
38			
39	Ground water		
40		40	40
41			
42			
43			
44			
45		45	45
46			
47			
48			
49			
50		50	50
51			
52			
53			
54			
55		55	55
56			
57			
58			
59			
60		60	60

KEY

Bentonite seal -

PVC Screen -

APPENDIX E

LANDFILL GAS MONITORING WELL SCHEDULE

WITH PARAMETERS

GUDE LANDFILL
LANDFILL GAS MONITORING WELL SCHEDULE

GEM ID	Name	Date Time	CH4 % by vol	CO2 % by vol	O2 % by vol	Bal Gas % by vol	Init Flow scfm	Ref Temp	Temp	Init Stat Press In. H2O	Adj Stat Press In. H2O	Diff Press In. H2O	Comment
Monitoring Wells (MW)													
GUDEMW2S	MW-02s												
GUDEMW3S	MW-03s												
GUDEMW3I	MW-03i												
GUDEMW3D	MW-03d												
GUDEMW4S	MW-04s												
GUDEMW4I	MW-04i												
GUDEMW4D	MW-04d												
GUDEMW5S	MW-05s												
GUDEMW5I	MW-05i												
GUDEMW5D	MW-05d												
GUDEMW6S	MW-06s												
GUDEMW6I	MW-06i												
GUDEMW6D	MW-06d												
GUDEMW7S	MW-07s												
GUDEMW7I	MW-07i												
GUDEMW7D	MW-07d												
GUDEMW8S	MW-08s												
GUDEMW8I	MW-08i												
GUDEMW8D	MW-08d												
GUDEMW9S	MW-09s												
GUDEMW9I	MW-09i												
GUDEMW9D	MW-09d												

Notes:
1. Monitoring Well (MW) designations are differentiated by probe depth: s = shallow (10-15 feet), i = intermediate (23-28 feet), d = deep (33-38 feet).

APPENDIX F

LANDFILL GAS MONITORING PLAN

AND MONITORING WELL DETAIL

WITH BAR PUNCH STUDY

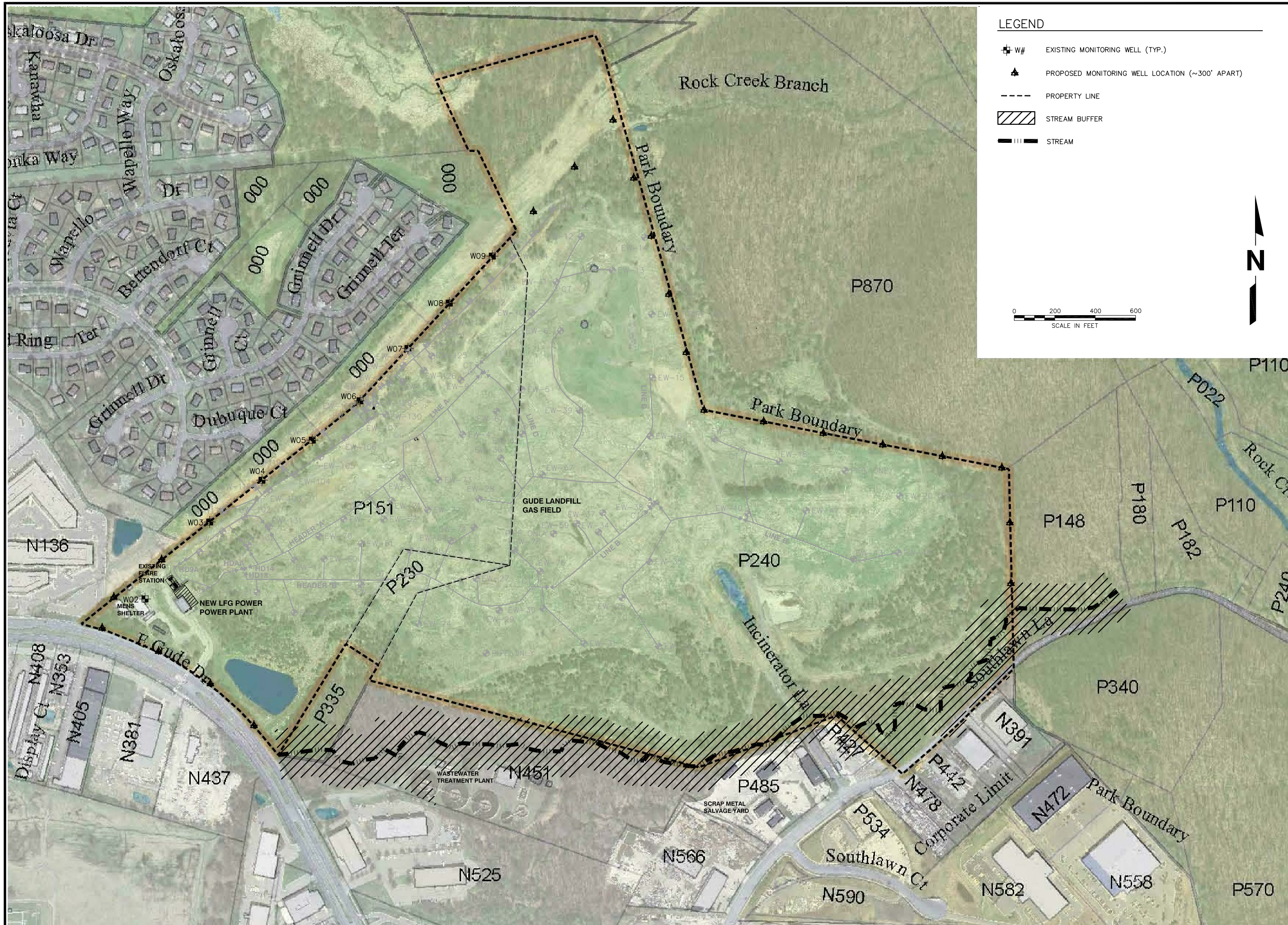

NO.	REVISION	DATE

SHEET TITLE
PROPOSED MONITORING WELL LOCATIONS

PROJECT TITLE
GUDE LANDFILL
LFG MONITORING PLAN

CLIENT
MONTGOMERY COUNTY DEP/DSWS
16101 FREDERICK ROAD
DERWOOD, MARYLAND 20855

SCS ENGINEERS
STEARNS, CONRAD AND SCHMIDT CONSULTING ENGINEERS, INC.
11260 ROGER BACON DRIVE - RESTON, VA 20190
PH. (703) 471-6150 FAX. (703) 471-6676

PROJ. NO. 02203039.07 | DSN. BY: MAK | DWN. BY: MAK | CHK. BY: MAK | Q/A RVW BY: MAK | APP. BY: MAK

CADD FILE: MONITORING
DATE: 3.20..09
SCALE: AS SHOWN
DRAWING NO. 1 of 1

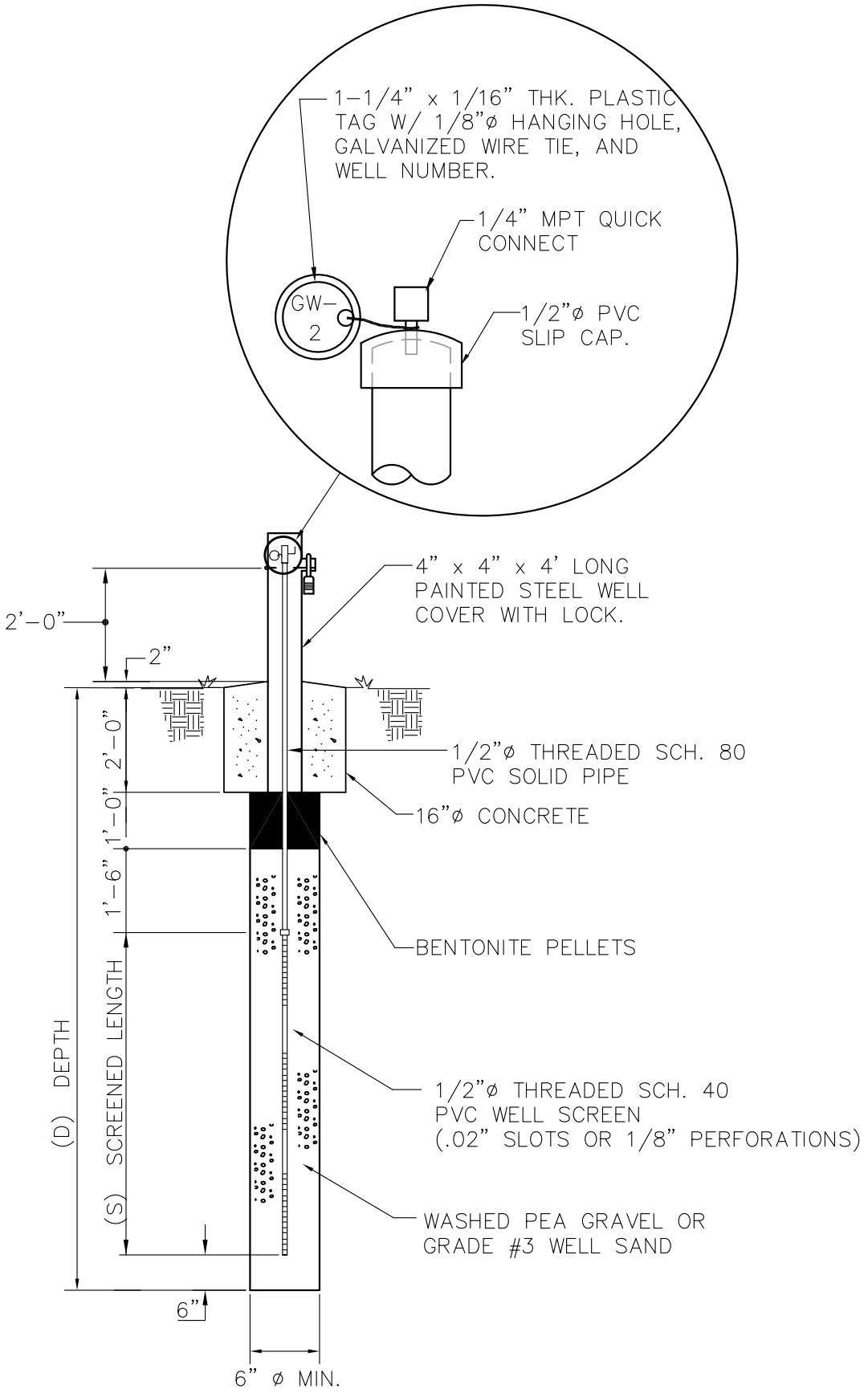

LANDFILL GAS MONITORING WELL DETAIL

APPENDIX G

LANDFILL GAS MONITORING AND REPORTING SUMMARY

GUDE LANDFILL
LANDFILL GAS MONITORING AND REPORTING SUMMARY

Performing Entity	LFG Monitoring Responsibility	Monitoring Frequency	Monitoring Data Transfer	Reporting Entity	Comments
Contractor (SCS Engineers)	Bar Punch Study along property boundary of the Gude Landfill	one-time event	Contractor to DSWS	DSWS to MDE	See Note 1
DEP	LFG monitoring of monitoring wells (W03-W09) along the northwest property boundary of the Gude Landfill.	Weekly	DEP to DSWS	DEP to DSWS	See Note 2
Contractor (SCS Engineers)	LFG monitoring of monitoring wells (W03-W09) along the northwest property boundary of the Gude Landfill.	Quarterly	Contractor to DSWS	DSWS to MDE	See Note 3
Contractor (SCS Engineers)	LFG monitoring for any new monitoring wells along the property boundary of the Gude Landfill.	Quarterly	Contractor to DSWS	DSWS to MDE	See Note 3
Contractor (SCS Engineers)	LFG monitoring for any existing and future on-site structures at the Gude Landfill.	Quarterly	Contractor to DSWS	DSWS to MDE	See Note 3

Notes:
1. Contractor to initiate bar punch study within thirty (30) days following the DSWS submission of the LFGMP to MDE.
2. DEP LFG monitoring may be decreased in frequency in accordance with Sections 3.2 and 3.5 of the LFGMP after a prolonged period with no methane gas exceedences.
3. DSWS to submit LFG monitoring data in a summary report to MDE within thirty (30) days following the completion of the quarterly monitoring.