Webb Tract
Traffic Impact Study

March 2010

Prepared for

Prepared by

STV Incorporated
7125 Ambassador Road
Baltimore, Maryland 21244

Table of Contents

I. Introduction 1

II. Existing Condition Capacity Analysis 3

III. Background Condition Capacity Analysis 8

IV. Future Condition Capacity Analysis 13

V. Conclusions and Recommendations 20

List of Figures

Figure 1 Location Map 2

Figure 2 Existing Lane Configurations and Traffic Control 4

Figure 3 Existing Condition AM and PM Peak Hour Traffic Volumes 6

Figure 4 Location of Background Developments 9

Figure 5 Combined Background Development Trip Assignment 10

Figure 6 Background Condition AM and PM Peak Hour Traffic Volumes 11

Figure 7 Site Trip Distribution (Personal Vehicles) 15

Figure 8 Site Trip Distribution (County Vehicles/Vendors) 16

Figure 9 Site Trip Assignment (Personal Vehicles) 17

Figure 10 Site Trip Assignment (County Vehicles/Vendors) 18

Figure 11 Future Condition AM and PM Peak Hour Traffic Volumes 19

Figure 12 Snouffer School Road at Centerway Road Improvements 22

List of Tables

Table 1 Existing Intersection Capacity Analysis 7

Table 2 Background Intersection Capacity Analysis 12

Table 3 AM and PM Peak Hour Site Trips 14

Table 4 Future – Intersection Capacity Analysis 20

Table 5 PM Peak Hour Signal Timing Recommendations 21

Table 6 Future with Improvements – Intersection Capacity Analysis 23

List of Appendices

Appendix A Turning Movement Count Information

Appendix B Existing Traffic Signal Timing Information

Appendix C Existing Capacity Analysis Worksheets

Appendix D AASHTO Sight Distance Criteria

Appendix E Background Development Information

Appendix F Background Capacity Analysis Worksheets

Appendix G Site Trip Data

Appendix H Future Capacity Analysis Worksheets

Appendix I Traffic Signal Warrant Analysis

Appendix J Recommended Improvements Capacity Analysis Worksheets

I. Introduction

This report contains the data, analysis, findings, and conclusions of a Traffic Impact Study for the proposed relocation of several Montgomery County facilities to the property known as the Webb Tract. As shown in Figure 1, the site is located along Snouffer School Road in Montgomery Village, Maryland. Montgomery County's proposed site includes Montgomery County Public School's (MCPS) Food and Nutrition Services, MCPS Building Maintenance, Maryland-National Park and Planning Commission (M-NCPPC) Maintenance, and a Public Safety Training Academy (PSTA).

This study has been conducted in accordance with the standards set forth in the M-NCPPC's Local Area Transportation Review (LATR) and Policy Area Mobility Review (PAMR) Guidelines. The study utilizes traffic counts, background development, and other information provided by the M-NCPPC. This report includes a full assessment of Existing, Background, and Proposed Conditions at nine intersections based on the Critical Lane Volume (CLV) and ***Highway Capacity Manual (HCM)*** methodologies.

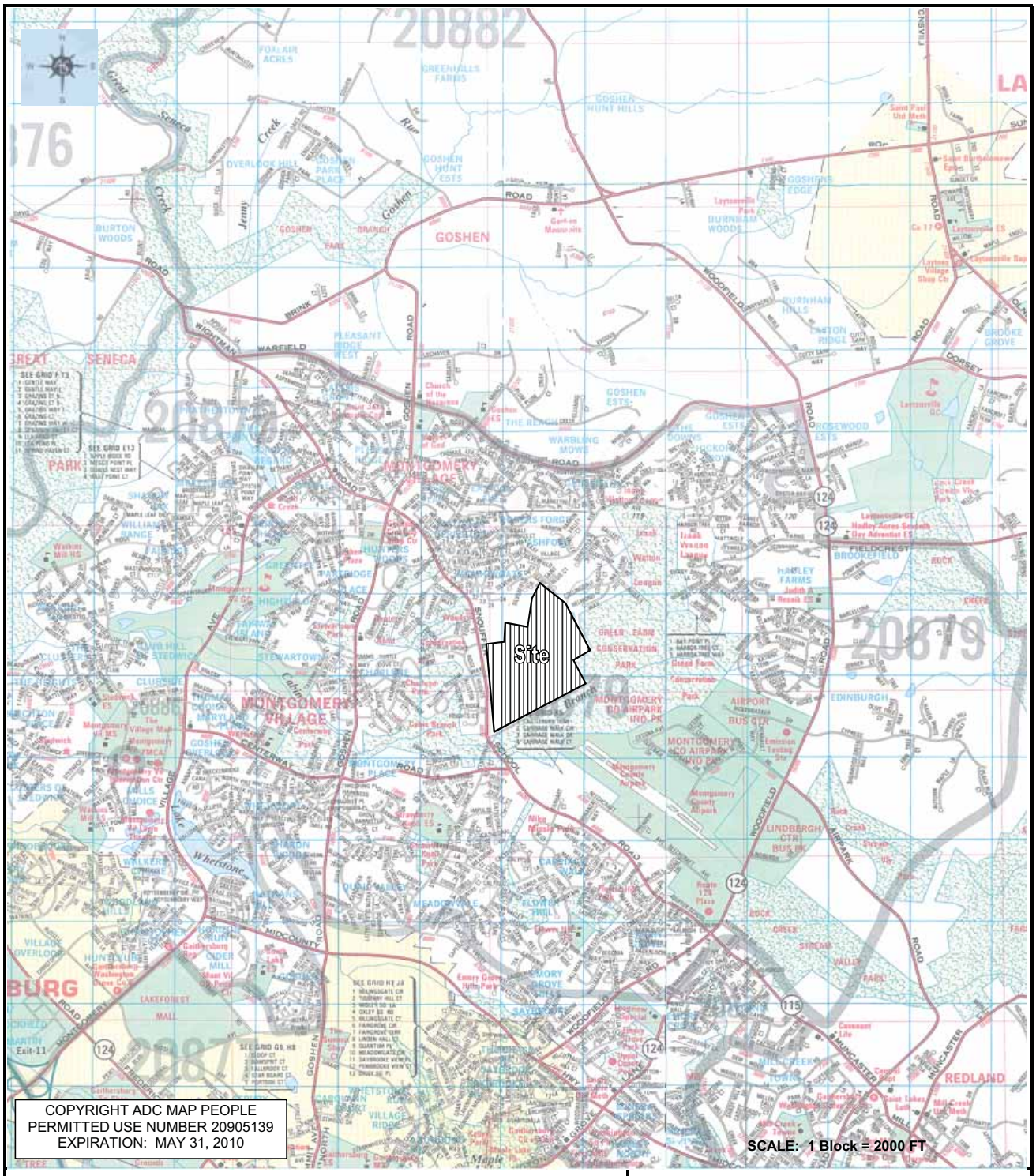

Webb Tract Traffic Impact Study

Figure 1

Location Map

STV

II. Existing Condition Capacity Analysis

For the purposes of this study, nine intersections were selected by the M-NCPPC for analysis. Figure 2 shows the location and lane configuration of each intersection. A discussion of the principal roadways within the study area is presented below along with a brief description of each of the study intersections.

Principal Roadways

- **Snouffer School Road** is generally two lanes undivided and runs in a north-south direction. The posted speed limit is 40 mph.
- **Goshen Road** is generally two lanes undivided and runs in a north-south direction. The posted speed limit is 40 mph.
- **Montgomery Village Avenue** is generally a four lane divided roadway and runs in a north-south direction. The posted speed limit is 35 mph.
- **Centerway Road** east of Goshen Road is generally two lanes divided by a two-way center left-turn lane. Centerway Road west of Goshen Road is generally four lanes divided. It runs in an east-west direction and the posted speed limit is 40 mph.

Study Intersections

- **Snouffer School Road/MD 115 (Muncaster Mill Road) at MD 124 (Woodfield Road)** is a signalized intersection with four legs. MD 124 operates with split phasing. The left turns from Snouffer School Road/MD 115 operate with exclusive-permissive phasing. All right turn lanes have channelizing islands.
- **Snouffer School Road at Mooney Drive/Cherry Laurel Lane** is a signalized intersection with four legs. The left-turns from southbound Snouffer School Road operate with exclusive-permissive phasing.
- **Snouffer School Road at Centerway Road** is a signalized T-intersection. The left turns from northbound Snouffer School Road operate with exclusive-permissive phasing. The right-turns from eastbound Centerway Road operate with an overlap phase.
- **Snouffer School Road at Alliston Hollow Way** is an unsignalized T-intersection. Eastbound Alliston Hollow Way is STOP-controlled. There is an abandoned driveway that dead ends into the Webb Tract property on the east side of the intersection. In the proposed future condition, this will serve as a site driveway.
- **Snouffer School Road at Turkey Thicket Drive** is an unsignalized T-intersection. Turkey Thicket Drive is a dirt road that provides construction/maintenance access to the Webb Tract property. In the proposed future condition, this will serve as a site driveway.

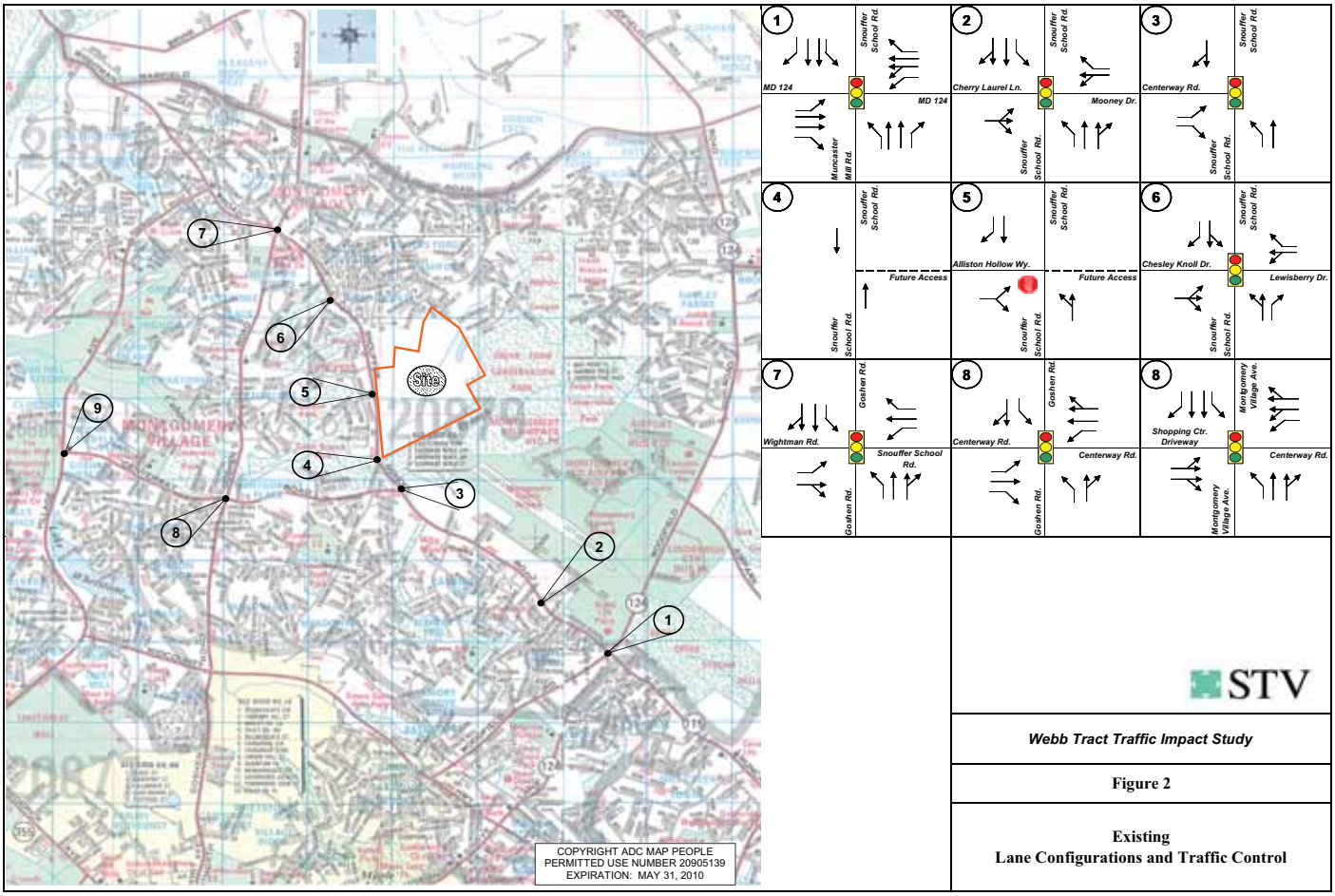

Webb Tract Traffic Impact Study

Figure 2

Existing
Lane Configurations and Traffic Control

- **Snouffer School Road at Lewisberry Drive/Chesley Knoll Drive** is a signalized intersection with four legs. All left turns operate with permissive phasing.
- **Snouffer School Road/Wightman Road at Goshen Road** is a signalized intersection with four legs. All left-turn movements operate with exclusive-permissive phasing with the exception of the left-turns from northbound Goshen Road which run permissively.
- **Centerway Road at Montgomery Village Avenue** is a signalized intersection with four legs. There is a shopping center driveway that serves as the west leg. This approach and the Centerway Road approach operate with split phasing.
- **Centerway Road at Goshen Road** is a signalized intersection with four legs. Left-turns from northbound Goshen Road operate with exclusive-permissive phasing.

AM and PM peak period turning movement counts were conducted on September 9th, October 1st and 6th 2009 at the following intersections:

- Centerway Road at Montgomery Village Avenue
- Centerway Road at Goshen Road
- Snouffer School Road at Mooney Drive
- Snouffer School Road at Goshen Road
- Snouffer School Road at Alliston Hollow Way
- Snouffer School Road at Lewisberry Drive

M-NCPPC provided turning movement volumes for the signalized intersections of Centerway Road at Snouffer School Road and Snouffer School Road at Woodfield Road. The turning movement counts can be found in Appendix A. Existing AM and PM peak hour volumes can be found in Figure 3.

Signal timing data for all the signalized intersections studied was provided by Montgomery County and can be found in Appendix B.

Intersection capacity analyses were conducted using both the Critical Lane Volume (CLV) approach and Synchro software. The CLV method for calculating the level of congestion at an intersection provides a "snapshot in time" of traffic conditions. According to the LATR guidelines, the Policy Area of Montgomery Village/Airpark requires mitigation for a CLV greater than 1,425. Synchro uses the methodology from the ***Highway Capacity Manual*** which offers a more detailed examination of traffic operations. The software records a variety of measures of effectiveness (MOEs). The MOEs utilized as part of this evaluation included LOS and delay. Table 1 below summarizes the results of the Existing Condition intersection capacity analyses.

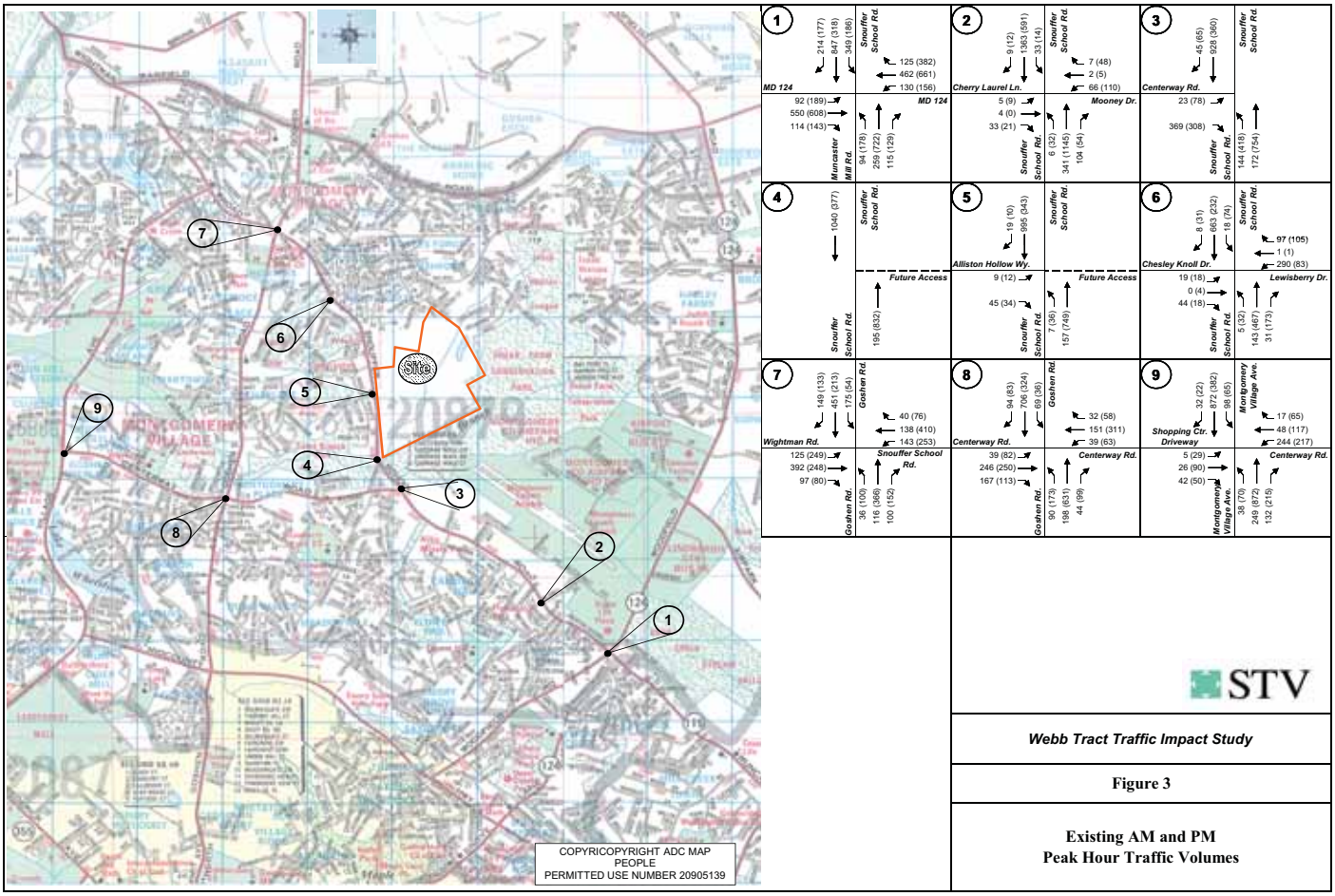

STV

Webb Tract Traffic Impact Study

Figure 3

Existing AM and PM
Peak Hour Traffic Volumes

Table 1: Existing Intersection Capacity Analysis

Intersection		AM Peak Hour Synchro			PM Peak Hour Synchro		
		Delay (sec/veh)	LOS	CLV	Delay (sec/veh)	LOS	CLV
1	Snouffer School Road at MD 124 (Woodfield Road)	45.3	D	1,071	50.3	D	1,218
2	Snouffer School Road at Mooney Drive	8.4	A	842	10.9	B	790
3	Snouffer School Road at Centerway Road	33.5	C	1,342	10.5	B	921
4	Snouffer School Road at Turkey Thicket Drive[1]						
5	Snouffer School Road at Alliston Hollow Way[2]	26.3	D	1,056	16.2	C	867
6	Snouffer School Road at Lewisberry Drive	43.0	D	1,043	12.4	B	730
7	Snouffer School Road at Goshen Road	32.1	C	986	35.8	D	910
8	Centerway Road at Goshen Road	25.0	C	1,175	22.2	C	1,079
9	Centerway Road at Montgomery Village Avenue	20.5	C	662	25.5	C	890

1- Future Site Driveway
2- Unsignalized Intersection – Delay and LOS are reported for the side street

It can be seen from the table above that during the AM and PM peak hour all intersections operate with an acceptable LOS and the CLV is less than the 1,425 threshold. The Synchro and CLV capacity analysis worksheets for the Existing Condition are included in Appendix C.

Sight Distance Evaluation

Adequacy of intersection sight distance (ISD) was evaluated at both of the proposed site driveways. In addition, stopping sight distance (SSD) was evaluated along Snouffer School Road in the vicinity of the site driveways. Sight distance was found to be adequate at all locations with the exception of the ISD for a left turn from Turkey Thicket Drive to southbound Snouffer School Road. There is a horizontal curve with overgrown vegetation at this location that limits the ISD to 400 feet. According to AASHTO's ***A Policy on Geometric Design of Highways and Streets*** the ISD should be 445 feet for a design speed of 40 miles per hour. It is recommended that the vegetation be trimmed to provide adequate sight distance. The AASHTO ISD and SSD sight distance criteria are located in Appendix D.

Pedestrian Statement

There are no sidewalks along Snouffer School Road in the vicinity of the site. Marked crosswalks are provided at all of the signalized study intersections. There are no marked crosswalks at the unsignalized study intersections.

The largest AM peak hour pedestrian volumes for a single crossing were recorded at the intersection of Montgomery Village Avenue at Centerway Road with a total of 11 pedestrians crossing the South leg (Montgomery Village Avenue). The largest PM peak hour pedestrian volumes for a single crossing were recorded at the intersection of Centerway Road at Goshen Road with a total of 25 pedestrians crossing the East leg (Centerway Road). The least amount of pedestrian activity occurred at the intersection of Snouffer School Road at Alliston Hollow Way with a total of four pedestrians during the two and one-half hour AM peak period and three pedestrians during the two and one-half hour PM peak period. All of the pedestrian activity at this intersection was a result of the Ride-On line 58 which stops at this intersection. In addition to this line, the study area is served by Ride-On lines 57, 60, and 64.

III. Background Condition Capacity Analyses

In order to isolate the impact of the proposed development it is necessary to evaluate conditions in the build year prior to the completion of the subject development. Background conditions include general growth in regional traffic (two percent over a three year period) and background developments which have been approved but are not yet built that will affect roadways in the study area.

There are six background developments that were considered in this study. The names and locations of these background developments are shown in Figure 4. Background trip information has been included in Appendix E. There are no major roadway improvements that are funded for construction in either Montgomery County's Capital Improvement Program (CIP) or the State's Consolidated Transportation Program (CTP). However, the background condition includes the modifications at the intersection of Snouffer School Road at Centerway Road as recommended in the traffic impact study for Centerway Plaza Lot 2 have been made. These include adding southbound right- and left-turn lanes at this intersection. It is also expected that the county will require the developer to widen along the property frontage. A statement regarding these modifications is included in Appendix E. It is assumed that the eastbound Centerway Road lane configuration will be converted from a left turn only, right turn only to a shared through-left and a right turn only. Combined Background development trip assignment is shown in Figure 5. The Background peak hour volumes are shown on Figure 6. Table 2 below summarizes the results of the Background Condition intersection capacity analyses.

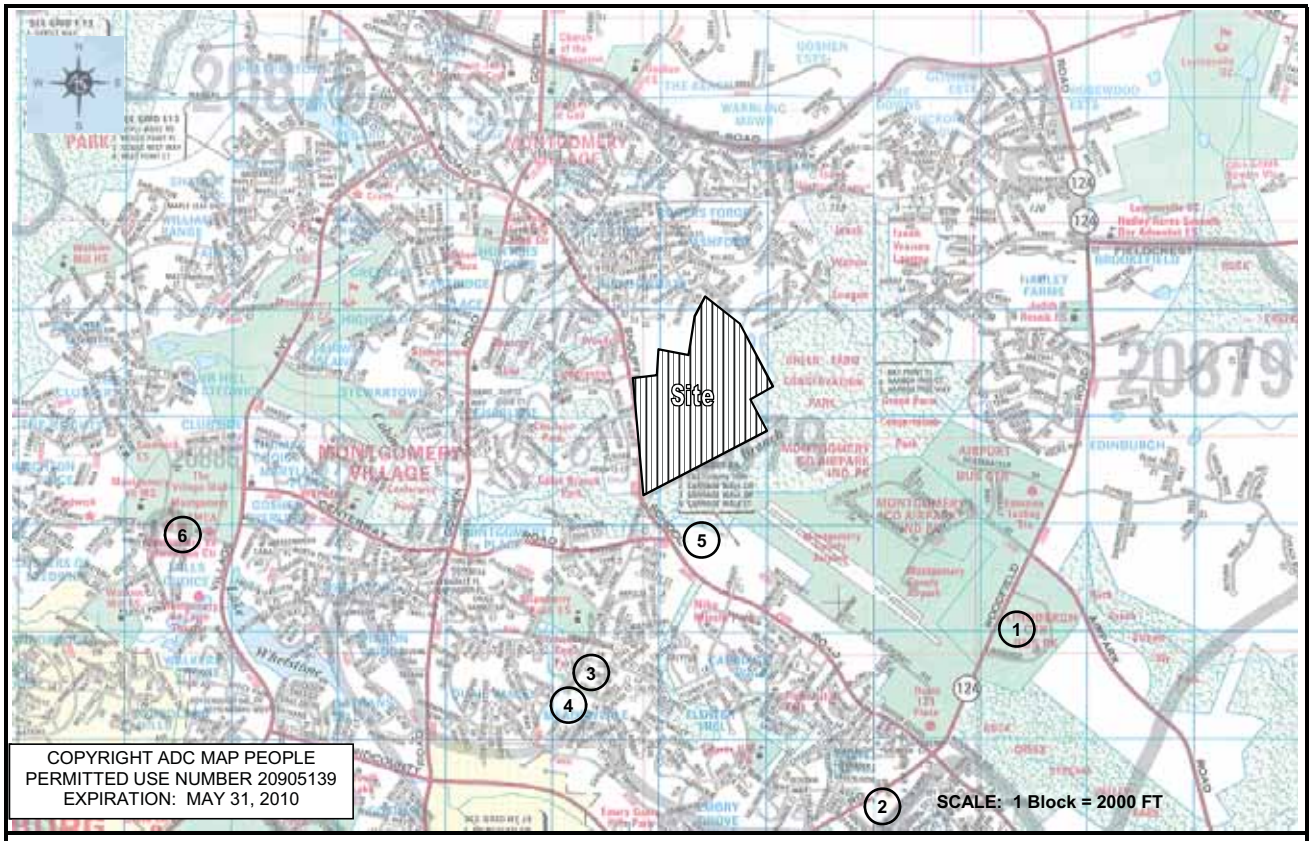

1. Rickman Property
2. Flower Hill Parcel 31
3. Meadowvale
4. Strawberry Knolls
5. Centerway Plaza Lot 2
6. Montgomery Village Marketplace

STV

Webb Tract Traffic Impact Study

Figure 4

Location of Background Developments

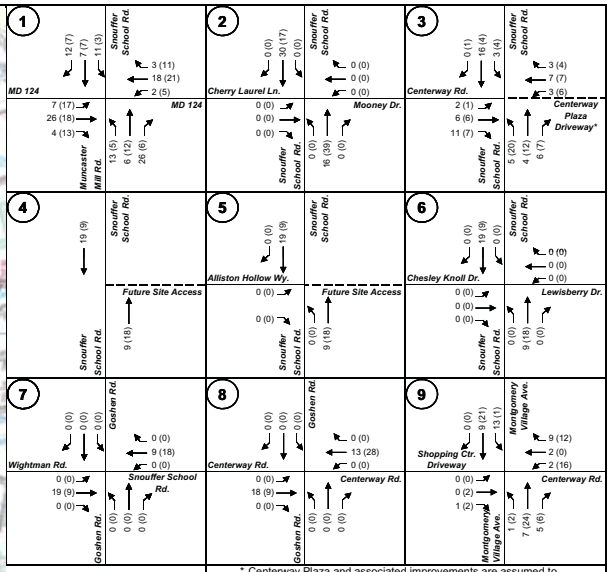

* Centerway Plaza and associated improvements are assumed to be constructed in the Background Condition

STV

Webb Tract Traffic Impact Study

Figure 5

Combined Background Development Trip Assignment AM and PM Peak Hour Traffic Volumes

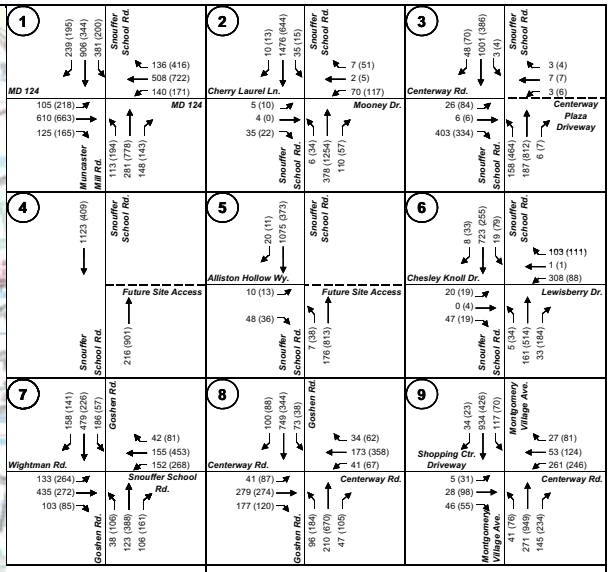

STV

Webb Tract Traffic Impact Study

Figure 6

Background AM and PM Peak Hour Traffic Volumes

Table 2: Background Intersection Capacity Analysis

Intersection		AM Peak Hour Synchro			PM Peak Hour Synchro		
		Delay (sec/veh)	LOS	CLV	Delay (sec/veh)	LOS	CLV
1	Snouffer School Road at MD 124 (Woodfield Road)	54.5	D	1,176	**60.5**	**E**	1,321
2	Snouffer School Road at Mooney Drive	8.7	A	908	11.3	B	860
3	Snouffer School Road at Centerway Road	44.4	D	1,407	11.5	B	954
4	Snouffer School Road at Turkey Thicket Drive[1]						
5	Snouffer School Road at Alliston Hollow Way[2]	31.0	D	1,140	17.8	C	938
6	Snouffer School Road at Lewisberry Drive	49.7	D	1126	12.6	B	793
7	Snouffer School Road at Goshen Road	34.3	C	1,066	39.9	D	1,065
8	Centerway Road at Goshen Road	28.5	C	1,265	23.6	C	1,154
9	Centerway Road at Montgomery Village Avenue	21.2	C	713	27.3	C	975

1- Future Site Driveway
2- Unsignalized Intersection – Delay and LOS are reported for the side street

It can be seen from the table above that under Background Conditions all of the intersections continue to operate at an acceptable LOS and CLV with the exception of Snouffer School Road at MD 124. Based on delay, this intersection deteriorates to a LOS E in the PM peak hour. However, the CLV at this location still remains below the 1,425 threshold. The Synchro and CLV capacity analysis worksheets for the Background Condition are included in Appendix F.

IV. Future Condition Capacity Analysis

The Montgomery County Proposed Use calls for the relocation of several county facilities to the subject property. These include the MCPS Food and Nutrition Services, MCPS Building Maintenance, M-NCPPC Maintenance, and the PSTA.

The PSTA is currently located at 9710 Great Seneca Highway in Rockville, Maryland. The Academy's two primary occupants are Montgomery County Fire and Rescue Services and Montgomery County Police. The PSTA specializes in various law enforcement training and public safety training operations. The MCPS Food and Nutrition Service facility is currently located in the Crabbs Branch County Service Park and is responsible for food production, storage, and distribution to schools throughout the County. The MCPS Building Maintenance facility is currently located in the Crabbs Branch County Service Park and provides specialized services including Elevator Repair, Asbestos Abatement, Pest Management, Recycling Monitoring, Contracting, Indoor Air Quality, and more. The M-NCPPC Facility is currently located in the Crabbs Branch County Service Park and provides a variety of maintenance services throughout the county.

The site is naturally divided into two portions by wetlands. For the purposes of this study, these portions will be referred to as the North and South portions. The proposed driveways to be constructed off of Snouffer School Road will serve the North and South portions independently. It is assumed that there will be no connection between the two portions. The northern driveway is to be located at the intersection of Snouffer School Road and Alliston Hollow Way as a fourth leg. The southern driveway will be located at the current location of Turkey Thicket Drive. The site configuration calls for the PSTA to be located on the north portion of the site utilizing the northern driveway. All other facilities will share the southern portion and will be served by the southern driveway. The future condition accounts for northbound right-turn lanes along Snouffer School Road at each of the driveways that are assumed to be built by the time of occupancy.

Site generated trip data was provided by Montgomery County from which AM and PM peak hour trips were derived for each facility/driveway and is included in Appendix G. The peak hour site trips are shown in Table 3, below. Generally, a majority of the trip activity for these facilities occurs prior to or after the peak hour of adjacent street traffic. Furthermore, a majority of the peak hour site trip activity will occur in the off peak direction. Trip distribution and assignment was based on regional trip tables from the LATR and population assumptions. The distribution pattern for personal vehicles is shown in Figure 7. County vehicles and vendor vehicles were assumed to follow a different distribution than all others using the site. The distrubtion pattern for county vehicles and vendors is shown in Figure 8. The trip assignment for county vehicles and vendors were assumed to follow the route protocol. Site trip assignments are shown in Figures 9 and 10. The Future Condition (Montgomery County Proposed Use) traffic volumes are shown in Figure 11. Table 4 summarizes the results of the Future Condition intersection capacity analyses.

Table 3: AM and PM Peak Hour Site Trips

	AM Peak Hour			PM Peak Hour		
	IN	OUT	TOTAL	IN	OUT	TOTAL
North Driveway	183	5	188	5	113	118
South Driveway	95	92	187	5	5	10
Total New Trips Generated – Future	**278**	**97**	**375**	**10**	**118**	**128**

The future condition also assumes a Route Protocol (included as part of Appendix G) developed by the community and agreed to by the County. The protocol implements "no drive zones" that prohibit county vehicles and vendors from using the several roadways as they arrive or depart from the site. The following roadways would be considered "no drive zones":

- Centerway Road, Goshen Road
- Montgomery Village Avenue
- Wightman Road, Lewisberry Road
- East Village Avenue.

Exemptions to this protocol include Fire Trucks and Personal Patrol Vehicles on call. In addition, service vehicles with destinations along these roadways would also be exempt as they currently utilize these routes. For example, MCPS Food and Nutrition Services may be permitted to make deliveries to schools located along Centerway Road.

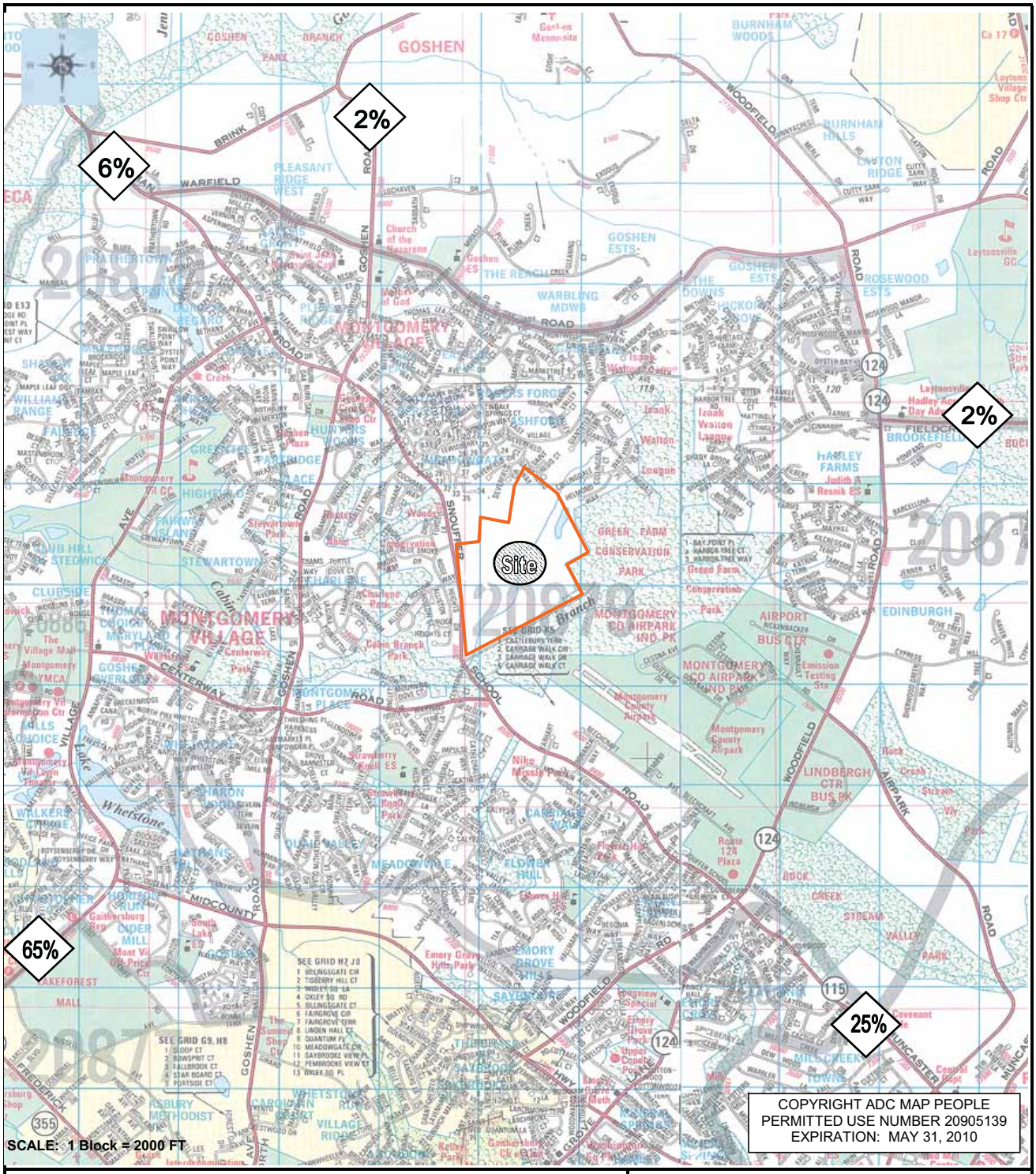

STV

Webb Tract Traffic Impact Study

Figure 7

Trip Distribution
(Personal Vehicles)

Webb Tract Traffic Impact Study

Figure 8

Trip Distribution
(County Vehicles/Vendors)

* Route Protocol prohibits county vehicles/vendors from using Snouffer School Road north of the site. Trips to/from the northern parts of the county must travel south to other routes, i.e., MD 124, I-270, etc.

STV

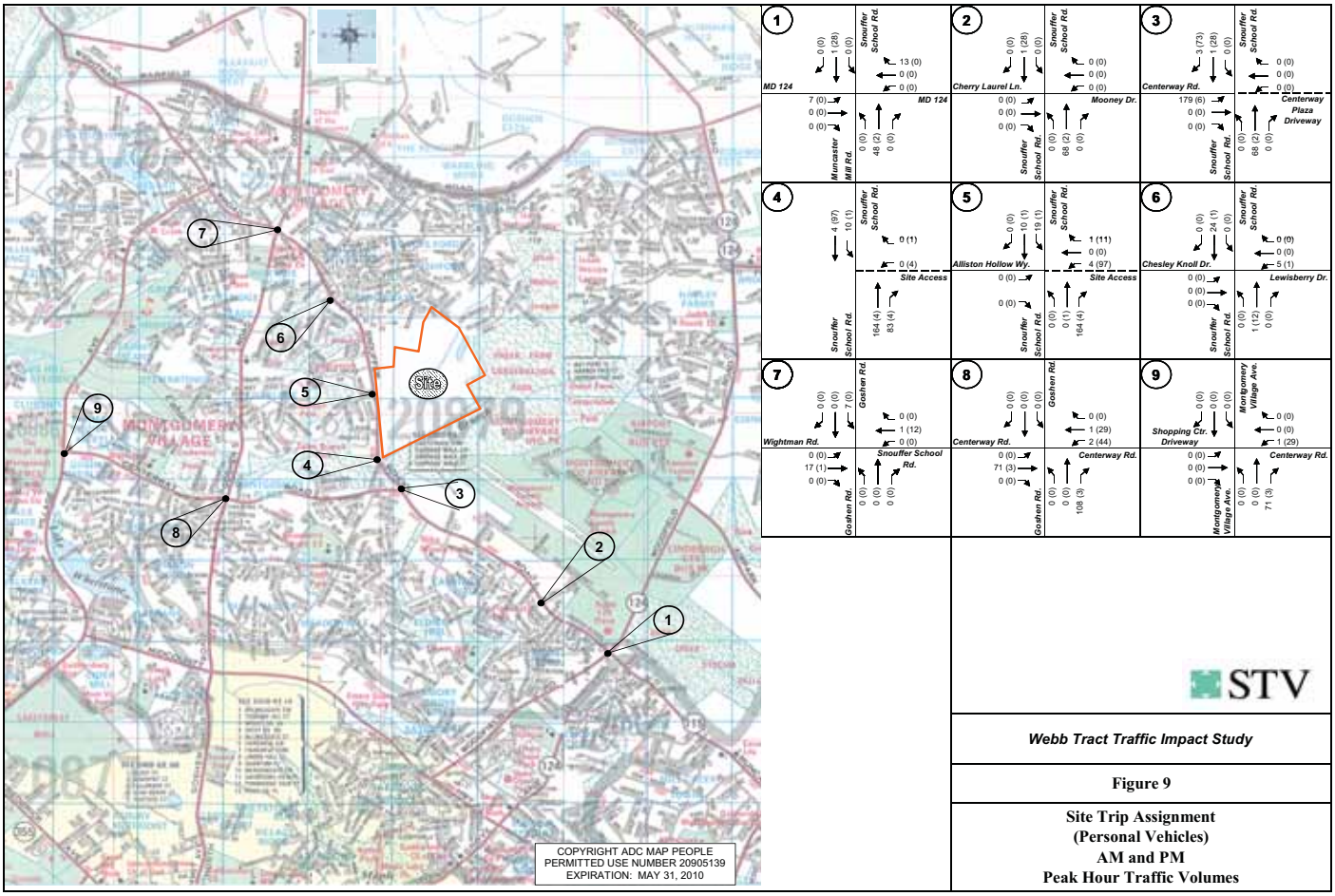

STV

Webb Tract Traffic Impact Study

Figure 9

Site Trip Assignment
(Personal Vehicles)
AM and PM
Peak Hour Traffic Volumes

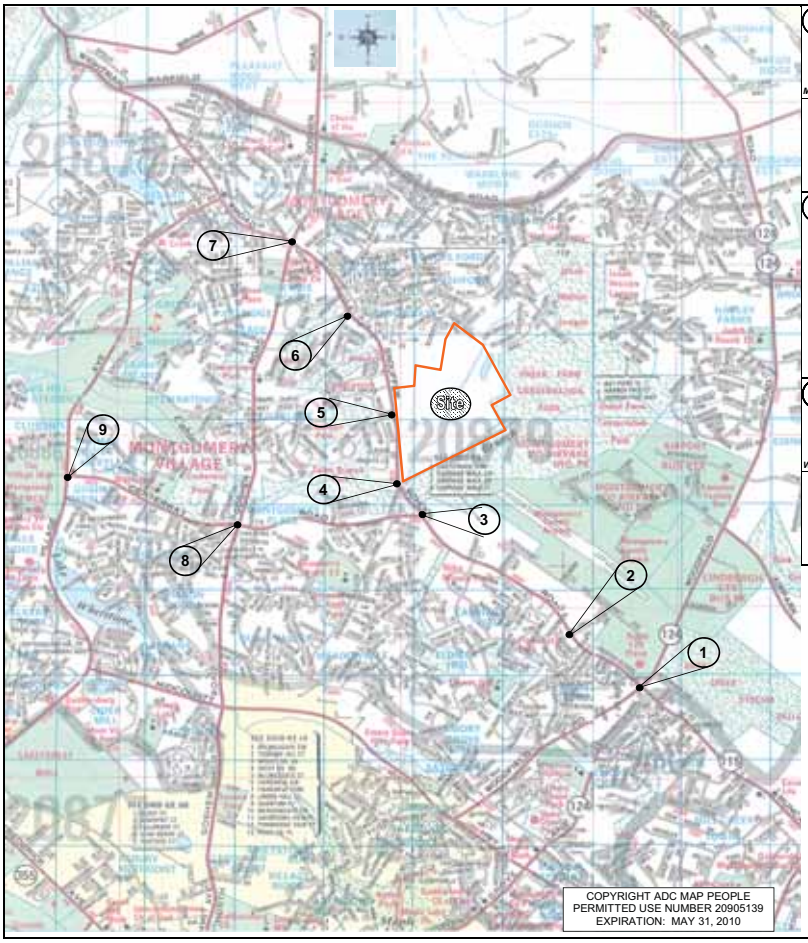

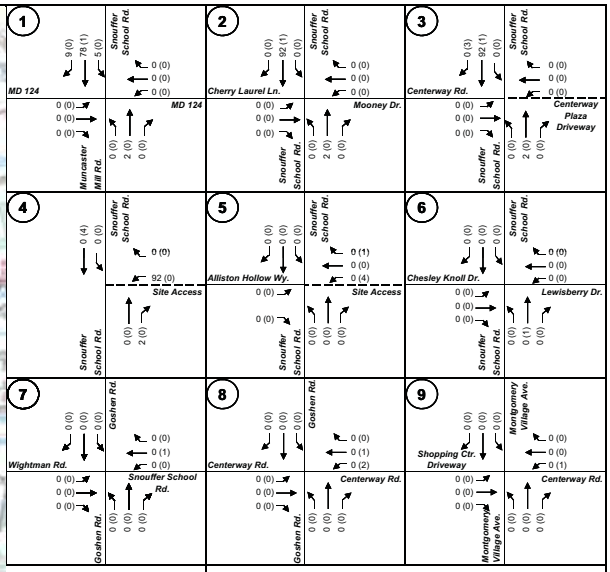

STV

Webb Tract Traffic Impact Study

Figure 10

Site Trip Assignment
(County Vehicles/Vendors)
AM and PM
Peak Hour Traffic Volumes

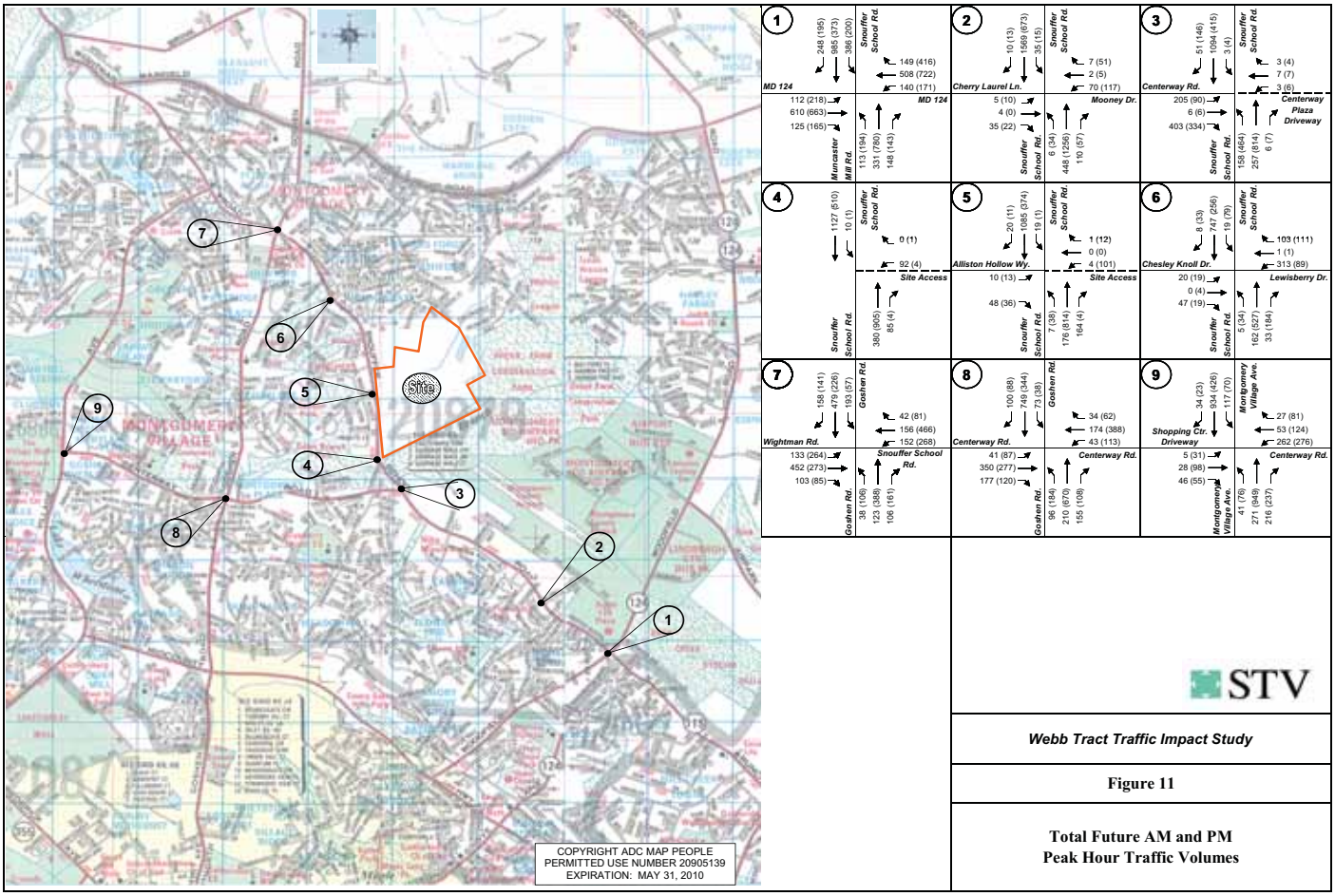
1
248 (195)
985 (373)
386 (200)
Snouffer School Rd.
149 (416)
508 (722)
140 (171)
MD 124
112 (218)
610 (663)
125 (165)
MD 124
Muncaster Mill Rd.
113 (194)
331 (780)
148 (143)
2
10 (13)
1569 (673)
35 (15)
Snouffer School Rd.
7 (51)
2 (5)
70 (117)
Cherry Laurel Ln.
5 (10)
4 (0)
35 (22)
Mooney Dr.
Snouffer School Rd.
6 (34)
448 (1256)
1 0 (57)
3
51 (146)
1094 (415)
3 (4)
Snouffer School Rd.
3 (4)
7 (7)
3 (6)
Centerway Rd.
205 (90)
6 (6)
403 (334)
Centerway Plaza Driveway
Snouffer School Rd.
158 (464)
257 (814)
6 (7)
4
1127 (510)
10 (1)
Snouffer School Rd.
0 (1)
92 (4)
Site Access
Snouffer School Rd.
380 (905)
85 (4)
5
20 (11)
1085 (374)
19 (1)
Snouffer School Rd.
1 (12)
0 (0)
4 (101)
Alliston Hollow Wy.
10 (13)
Site Access
48 (36)
Snouffer School Rd.
7 (38)
176 (814)
164 (4)
6
8 (33)
747 (256)
19 (76)
Snouffer School Rd.
103 (111)
1 (1)
313 (89)
Chesley Knoll Dr.
20 (19)
0 (4)
47 (19)
Lewisberry Dr.
Snouffer School Rd.
5 (34)
162 (527)
33 (184)
7
158 (141)
479 (226)
193 (57)
Goshen Rd.
42 (81)
156 (466)
152 (268)
Wightman Rd.
133 (264)
452 (273)
103 (85)
Snouffer School Rd.
Goshen Rd.
38 (106)
123 (388)
106 (161)
8
100 (88)
749 (344)
73 (38)
Goshen Rd.
34 (62)
174 (388)
43 (113)
Centerway Rd.
41 (87)
350 (277)
177 (120)
Centerway Rd.
Goshen Rd.
96 (194)
210 (670)
155 (108)
9
34 (23)
934 (428)
117 (70)
Montgomery Village Ave.
27 (81)
53 (124)
262 (276)
Shopping Ctr. Driveway
5 (31)
28 (98)
46 (55)
Centerway Rd.
Montgomery Village Ave.
41 (76)
271 (949)
216 (237)
STV
Webb Tract Traffic Impact Study
Figure 11
Total Future AM and PM
Peak Hour Traffic Volumes
COPYRIGHT ADC MAP PEOPLE
PERMITTED USE NUMBER 20905139
EXPIRATION: MAY 31, 2010

Table 4: Future – County Proposed Use – Intersection Capacity Analysis

Intersection		AM Peak Hour Synchro			PM Peak Hour Synchro		
		Delay (sec/veh)	LOS	CLV	Delay (sec/veh)	LOS	CLV
1	Snouffer School Road at MD 124 (Woodfield Road)	54.6	D	1,218	**60.3**	**E**	1,321
2	Snouffer School Road at Mooney Drive	8.5	A	957	11.3	B	860
3	Snouffer School Road at Centerway Road	**64.5**	**E**	**1,500**	12.1	B	987
4	Snouffer School Road at Turkey Thicket Drive[1]	**146.7**	**F**	1,239	**52.7**	**F**	911
5	Snouffer School Road at Alliston Hollow Way[1]	**51.0**	**F**	1,193	**476.1**	**F**	1,042
6	Snouffer School Road at Lewisberry Drive	51.6	D	1,156	12.5	B	806
7	Snouffer School Road at Goshen Road	34.8	C	1,083	40.2	D	1,078
8	Centerway Road at Goshen Road	36.5	D	1,338	27.0	C	1,203
9	Centerway Road at Montgomery Village Avenue	20.9	C	715	28.2	C	987

1- Site Driveway (Unsignalized Intersection – Delay and LOS are reported for the side street)

It can be seen from the table above that under the Future Condition most of the intersections continue to operate at an acceptable LOS and CLV. However, the intersection of Snouffer School Road at Centerway Road operates at an unacceptable LOS and CLV in the AM peak hour. The side street approach from Turkey Thicket Drive (South Site Driveway) to Snouffer School Road operates at an unacceptable LOS in both peak hours. The side street approach from the north site driveway to Snouffer School Road operates at an unacceptable LOS in the PM peak hour. The CLV at both site driveways, however, remains below the threshold of 1,425. The Synchro and CLV capacity analysis worksheets for the Future Condition are included in Appendix H.

V. Conclusion and Recommendations

Montgomery County's proposed use includes the PSTA on the North portion and the MCPS Maintenance, MCPS Food and Nutrition Services, and the M-NCPPC Maintenance facilities on the South portion. These portions will be served by separate driveways and there will be no connecting roadway internal to the site. The majority of the site generated trip activity occurs in off peak times and directions. To minimize impacts to the surrounding community, a route protocol shall be implemented that limits county vehicles and vendors to specific routes for traveling to and from the site.

Based on the analysis of Existing, Background and Future Conditions, the following findings and conclusions can be made:

- Under Existing Conditions all of the intersections operate at an acceptable LOS and CLV.

- Under the Background Conditions all intersections continue to operate at an acceptable LOS and CLV with the exception of Snouffer School Road at MD 124 which deteriorates to a LOS E during the PM peak hour. However, all study intersections retain an acceptable CLV.

- With the addition of traffic generated by Montgomery County's proposed use most intersections continue to operate at an acceptable LOS and CLV. However, the intersection of Snouffer School Road at Centerway Road deterioates to an unacceptable LOS and CLV. The CLV at this location increases to 1,500. The side street approach from Turkey Thicket Drive (South Site Driveway) operates at a LOS F in both peak hours. The side street approach from the North Site Driveway operates at a LOS F in the both peak hours.

LATR and PAMR Trip Mitigation Recommendations

Recommendations developed to mitigate the impacts of the additional site traffic in the Future Condition are as follows:

- **Snouffer School Road at MD 124 (Woodfield Road)** requires signal timing modifications. The existing and proposed splits are shown in Table 5, below.

Table 5: PM Peak Hour Signal Timing Recommendations

Phase	Intersection Splits (%)	
	Existing	Proposed
NB/SB - Snouffer School Road/MD 115 (Muncaster Mill Road)	28	18
EB MD 124 (Woodfield Road)	35	38
WB MD 124 (Woodfield Road)	25	29
NB/SB Left-Turn – Snouffer School Road/ MD 115 (Muncaster Mill Road)	12	15

- **Snouffer School Road at Centerway Road** requires two southbound through lanes. This improvement involves converting the southbound right-turn lane (to be constructed as part of the Centerway Plaza development) to a shared thru-right and extending this lane approximately 450 feet to the north. In addition, Snouffer School Road needs to be re-striped south of Centerway Road to provide two southbound receiving lanes. In addition to improving the operations at this intersection, this improvement will benefit the intersection

of Snouffer School Road at Turkey Thicket Drive by reducing queues along southbound Snouffer School Road during the AM peak that block the site driveway. Figure 12 below displays the geometric changes between the Background and Future Condition at this intersection.

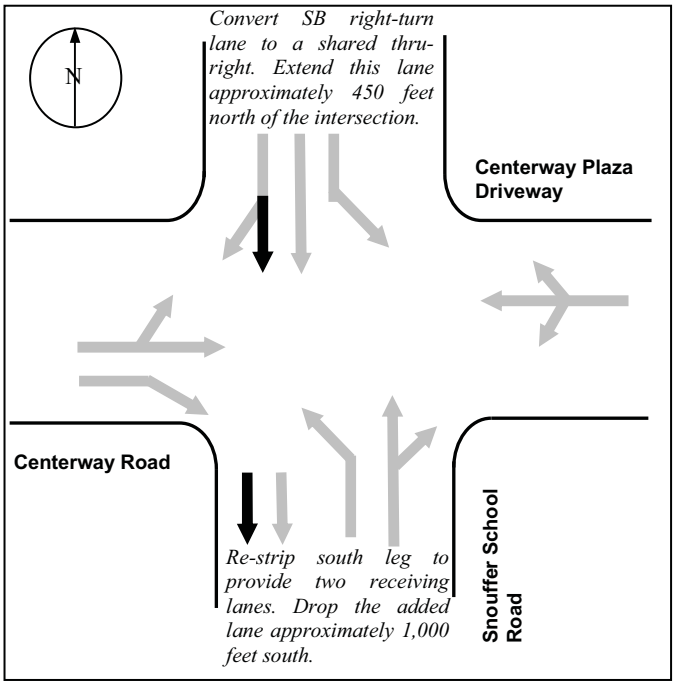

Figure 12: Snouffer School Road at Centerway Road Improvements

- **Snouffer School Road at Alliston Hollow Way** requires signalization. A signal warrant analysis was conducted for the Future Condition at the proposed North driveway. The results of the signal warrant analysis indicate that **Warrant 2 is met**. Appendix I contains the supporting signal warrant analysis documentation.

Table 6 shows the results of a capacity analysis for the improvements listed above at each location in *blue*:

Table 6: Future Condition with Improvements – Intersection Capacity Analysis

Intersection		AM Peak Hour Synchro			PM Peak Hour Synchro		
		Delay (sec/veh)	LOS	CLV	Delay (sec/veh)	LOS	CLV
1	Snouffer School Road at MD 124 (Woodfield Road)	54.6	D	1,218	*51.2*	*D*	1,154
3	Snouffer School Road at Centerway Road	*18.4*	*B*	*1,013*	*11.6*	B	*987*
4	Snouffer School Road at Turkey Thicket Drive[1]	*17.0*	*C*	957	***49.6***	***E***	860
5	Snouffer School Road at Alliston Hollow Way[2]	*6.9*	*A*	957	*10.5*	*B*	860

1- Site Driveway (Unsignalized Intersection – Delay and LOS are reported for the side street)
2- Site Driveway (Signalized Intersection)

It can be seen from the table above that all intersections operate at an acceptable CLV once the recommended improvements are implemented. The side street from Turkey Thicket Drive (South Site Driveway) to Snouffer School Road has a slight reduction in delay but continues to operate at an unacceptable LOS during the PM Peak Hour. It is important to note that the delay associated with the LOS at this intersection is for vehicles exiting the site (less than five vehicles). This delay will not be experienced by vehicles on Snouffer School Road. Synchro and CLV worksheets are included in Appendix J.

In addition to the improvements listed above, the Montgomery County Department of Transportation (MCDOT) is developing a project to improve Snouffer School Road in the vicinity of the site to a four lane divided roadway from south of Centerway Road to north of Alliston Hollow Way.

PAMR guidelines require that 5 percent of the highest peak hour site generated trips be mitigated. Under Montgomery County's proposed use, the mitigation of 19 trips would be required. The guidelines allow for a lump sum payment of $11,000 per mitigated PAMR trip to be made in lieu of physical improvements. Therefore, Montgomery County would be accountable for $209,000. The County will contribute this amount toward the Snouffer School Road project listed above, thus satisfying the mitigation requirements.

APPENDIX

A

AM and PM Peak Period Turning Movement Count Information

Maryland State Highway Administratior
Highway Information Services Divisior
Turning Counts Study - Field Shee

Request No.:
Job No.:

Location: Snouffer School Road/MD 115 (Muncaster Mill Road) at MD 124 (Woodfield Road
Date: 3/31/2009 Tuesday
Recorder: Provided By M-NCPPC
Interval (dd) : (In Minutes)

County: Montgomery
Town:
Weather:

AM Peak Hour :

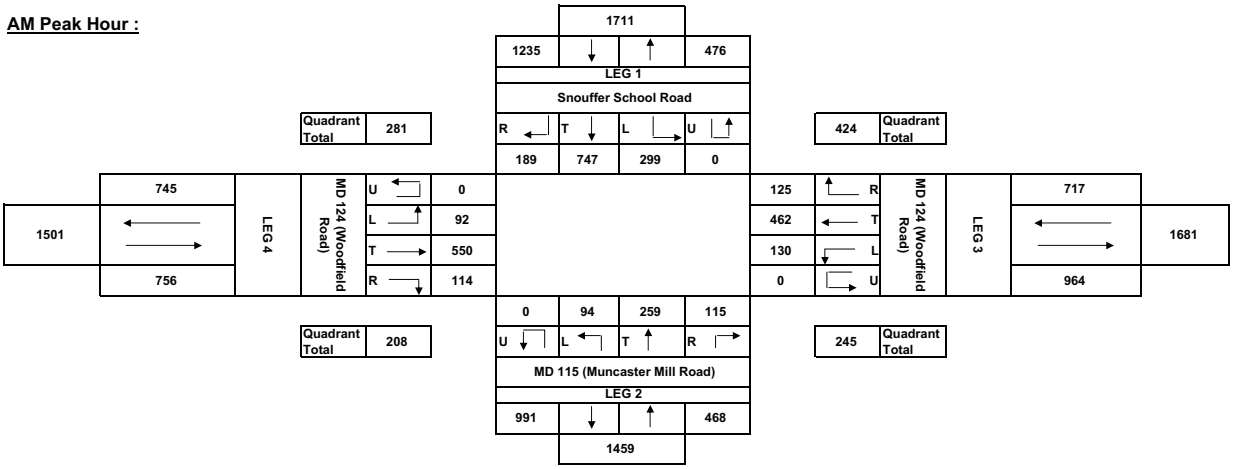

PM Peak Hour :

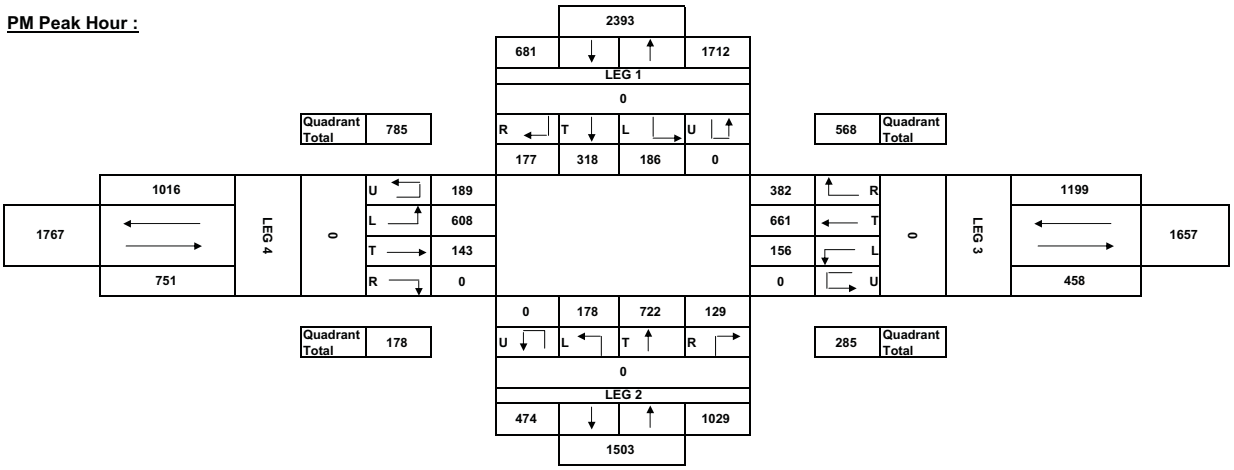

Maryland State Highway Administratior
Highway Information Services Divisior
Turning Counts Study - Field Shee

Request No.:
Job No.:

Location: Snouffer School Road at Mooney Drive
Date: 10/1/2009 Thursday
Recorder: MCG
Interval (dd) : 15
(In Minutes)

County: Montgomery
Town:
Weather: Clear

PEAK HOURS	AM PERIOD 6AM-10AM	Start	End	Volume	MID DAY 10AM-2PM	Start	End	Volume	PM PERIOD 2PM-7PM	Start	End	Volume
		07:15	08:15	1973		10:00	11:00	0		16:45	17:45	2041

Street Name-->	Snouffer School Road				Snouffer School Road				Mooney Drive				Mooney Drive				
HOUR	From North				From South				From East				From West				GRAND
ENDING	L	T	R	TOT	L	T	R	TOT	L	T	R	TOT	L	T	R	TOT	TOTAL
04:00				0				0				0				0	0
04:15				0				0				0				0	0
04:30				0				0				0				0	0
04:45				0				0				0				0	0
05:00				0				0				0				0	0
05:15				0				0				0				0	0
05:30				0				0				0				0	0
05:45				0				0				0				0	0
06:00				0				0				0				0	0
06:15				0				0				0				0	0
06:30	0	0	0	0	0	0	0	0	0	0	0	0	0	0	0	0	0
06:45	1	251	1	253	0	57	21	78	50	0	2	52	3	0	6	9	392
07:00	3	272	2	277	0	63	26	89	34	0	2	36	0	0	14	14	416
07:15	6	313	1	320	5	63	19	87	25	0	3	28	2	1	10	13	448
07:30	**6**	**315**	**2**	**323**	**1**	**72**	**20**	**93**	**21**	**1**	**0**	**22**	**2**	**2**	**8**	**12**	**450**
07:45	**10**	**362**	**2**	**374**	**1**	**76**	**26**	**103**	**18**	**1**	**3**	**22**	**1**	**1**	**6**	**8**	**507**
08:00	**7**	**352**	**0**	**359**	**2**	**83**	**37**	**122**	**18**	**0**	**4**	**22**	**1**	**0**	**10**	**11**	**514**
08:15	**10**	**334**	**5**	**349**	**2**	**110**	**21**	**133**	**9**	**0**	**0**	**9**	**1**	**1**	**9**	**11**	**502**
08:30	6	295	3	304	5	73	26	104	19	0	3	22	0	0	7	7	437
08:45	7	324	0	331	1	92	24	117	16	0	1	17	2	2	4	8	473
09:00	9	246	2	257	2	106	35	143	20	0	0	20	3	0	8	11	431
09:15	0	0	0	0	0	0	0	0	0	0	0	0	0	0	0	0	0
09:30	0	0	0	0	0	0	0	0	0	0	0	0	0	0	0	0	0
09:45	0	0	0	0	0	0	0	0	0	0	0	0	0	0	0	0	0
10:00	0	0	0	0	0	0	0	0	0	0	0	0	0	0	0	0	0
10:15	**0**	**0**	**0**	**0**	**0**	**0**	**0**	**0**	**0**	**0**	**0**	**0**	**0**	**0**	**0**	**0**	**0**
10:30	**0**	**0**	**0**	**0**	**0**	**0**	**0**	**0**	**0**	**0**	**0**	**0**	**0**	**0**	**0**	**0**	**0**
10:45	**0**	**0**	**0**	**0**	**0**	**0**	**0**	**0**	**0**	**0**	**0**	**0**	**0**	**0**	**0**	**0**	**0**
11:00	**0**	**0**	**0**	**0**	**0**	**0**	**0**	**0**	**0**	**0**	**0**	**0**	**0**	**0**	**0**	**0**	**0**
11:15	0	0	0	0	0	0	0	0	0	0	0	0	0	0	0	0	0
11:30	0	0	0	0	0	0	0	0	0	0	0	0	0	0	0	0	0
11:45	0	0	0	0	0	0	0	0	0	0	0	0	0	0	0	0	0
12:00	0	0	0	0	0	0	0	0	0	0	0	0	0	0	0	0	0
12:15	0	0	0	0	0	0	0	0	0	0	0	0	0	0	0	0	0
12:30	0	0	0	0	0	0	0	0	0	0	0	0	0	0	0	0	0
12:45	0	0	0	0	0	0	0	0	0	0	0	0	0	0	0	0	0
13:00	0	0	0	0	0	0	0	0	0	0	0	0	0	0	0	0	0
13:15	0	0	0	0	0	0	0	0	0	0	0	0	0	0	0	0	0
13:30	0	0	0	0	0	0	0	0	0	0	0	0	0	0	0	0	0
13:45	0	0	0	0	0	0	0	0	0	0	0	0	0	0	0	0	0
14:00	0	0	0	0	0	0	0	0	0	0	0	0	0	0	0	0	0
14:15	0	0	0	0	0	0	0	0	0	0	0	0	0	0	0	0	0
14:30	0	0	0	0	0	0	0	0	0	0	0	0	0	0	0	0	0
14:45	0	0	0	0	0	0	0	0	0	0	0	0	0	0	0	0	0
15:00	0	0	0	0	0	0	0	0	0	0	0	0	0	0	0	0	0
15:15	0	0	0	0	0	0	0	0	0	0	0	0	0	0	0	0	0
15:30	0	0	0	0	0	0	0	0	0	0	0	0	0	0	0	0	0
15:45	0	0	0	0	0	0	0	0	0	0	0	0	0	0	0	0	0
16:00	0	0	0	0	0	0	0	0	0	0	0	0	0	0	0	0	0
16:15	3	148	3	154	5	203	22	230	30	4	10	44	2	0	2	4	432
16:30	1	126	3	130	6	214	28	248	19	0	8	27	2	3	4	9	414
16:45	1	127	3	131	7	254	31	292	25	3	8	36	2	0	4	6	465
17:00	**5**	**141**	**2**	**148**	**9**	**265**	**13**	**287**	**28**	**1**	**10**	**39**	**5**	**0**	**7**	**12**	**486**
17:15	**2**	**157**	**4**	**163**	**11**	**300**	**14**	**325**	**38**	**2**	**16**	**56**	**2**	**0**	**3**	**5**	**549**
17:30	**1**	**162**	**3**	**166**	**6**	**302**	**15**	**323**	**26**	**1**	**10**	**37**	**2**	**0**	**4**	**6**	**532**
17:45	**6**	**131**	**3**	**140**	**6**	**278**	**12**	**296**	**18**	**1**	**12**	**31**	**0**	**0**	**7**	**7**	**474**
18:00	0	136	4	140	6	249	12	267	13	1	9	23	4	1	4	9	439
18:15	3	142	3	148	11	253	13	277	10	0	5	15	4	0	5	9	449
18:30	2	144	2	148	8	256	5	269	15	0	4	19	6	0	2	8	444
18:45	0	0	0	0	0	0	0	0	0	0	0	0	0	0	0	0	0
19:00				0	0	0	0	0	0	0	0	0	0	0	0	0	0
19:15				0				0				0				0	0
19:30				0				0				0				0	0
19:45				0				0				0				0	0
20:00				0				0				0				0	0
20:15				0				0				0				0	0
20:30				0				0				0				0	0
20:45				0				0				0				0	0
21:00				0				0				0				0	0
21:15				0				0				0				0	0
21:30				0				0				0				0	0
21:45				0				0				0				0	0
22:00				0				0				0				0	0
22:15				0				0				0				0	0
22:30				0				0				0				0	0
22:45				0				0				0				0	0
23:00				0				0				0				0	0
23:15				0				0				0				0	0
23:30				0				0				0				0	0
23:45				0				0				0				0	0
00:00				0				0				0				0	0
TOTAL	**89**	**4478**	**48**	**4615**	**94**	**3369**	**420**	**3883**	**452**	**15**	**110**	**577**	**44**	**11**	**124**	**179**	**9254**
AM Peak Vol	33	1363	9	1405	6	341	104	451	66	2	7	75	5	4	33	42	1973
PM Peak Vol	14	591	12	617	32	1145	54	1231	110	5	48	163	9	0	21	30	2041

PEDESTRIAN SCHOOL CHILDREN & U-TURN BREAKDOWN

Hour	Snouffer School Road			Snouffer School Road			Mooney Drive			Mooney Drive		
Ending	S.C.	PED.	U.T.	S.C.	PED.	U.T.	S.C.	PED.	U.T.	S.C.	PED.	U.T.
04:00												
04:15												
04:30												
04:45												
05:00												
05:15												
05:30												
05:45												
06:00												
06:15												
06:30		0			0			0			0	
06:45		0			0			0			0	
07:00		0			2			0			0	
07:15		1			0			0			0	
07:30		**0**			**1**			**0**			**0**	
07:45		**2**			**0**			**2**			**1**	
08:00		**1**			**0**			**1**			**0**	
08:15		**0**			**0**			**0**			**0**	
08:30		0			0			0			0	
08:45		0			1			1			0	
09:00		2			0			2			0	
09:15		0			0			0			0	
09:30		0			0			0			0	
09:45		0			0			0			0	
10:00		0			0			0			0	
10:15		**0**			**0**			**0**			**0**	
10:30		**0**			**0**			**0**			**0**	
10:45		**0**			**0**			**0**			**0**	
11:00		**0**			**0**			**0**			**0**	
11:15		0			0			0			0	
11:30		0			0			0			0	
11:45		0			0			0			0	
12:00		0			0			0			0	
12:15		0			0			0			0	
12:30		0			0			0			0	
12:45		0			0			0			0	
13:00		0			0			0			0	
13:15		0			0			0			0	
13:30		0			0			0			0	
13:45		0			0			0			0	
14:00		0			0			0			0	
14:15		0			0			0			0	
14:30		0			0			0			0	
14:45		0			0			0			0	
15:00		0			0			0			0	
15:15		0			0			0			0	
15:30		0			0			0			0	
15:45		0			0			0			0	
16:00		0			0			0			0	
16:15		1			0			1			0	
16:30		0			0			1			0	
16:45		0			0			3			0	
17:00		**0**			**0**			**0**			**0**	
17:15		**0**			**1**			**1**			**0**	
17:30		**0**			**0**			**0**			**1**	
17:45		**0**			**2**			**1**			**0**	
18:00		0			0			0			0	
18:15		1			0			0			0	
18:30		2			0			0			0	
18:45												
19:00												
19:15												
19:30												
19:45												
20:00												
20:15												
20:30												
20:45												
21:00												
21:15												
21:30												
21:45												
22:00												
22:15												
22:30												
22:45												
23:00												
23:15												
23:30												
23:45												
00:00												
TOTAL	**0**	**10**	**0**	**0**	**7**	**0**	**0**	**13**	**0**	**0**	**2**	**0**
AM Peak Vol	0	3	0	0	1	0	0	3	0	0	1	0
PM Peak Vol	0	0	0	0	3	0	0	2	0	0	1	0

Count Summary :

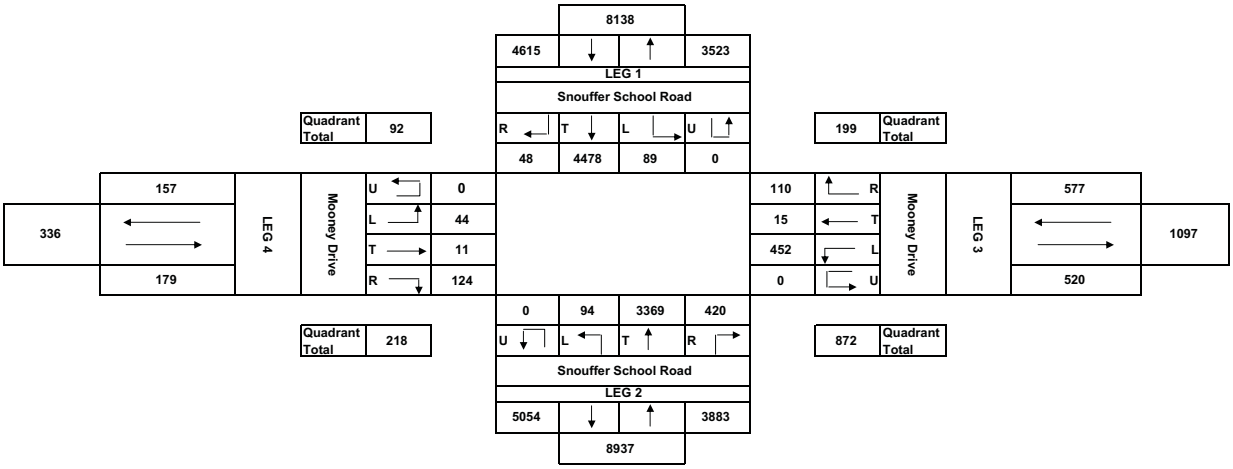

Comments :

AM Peak Hour :

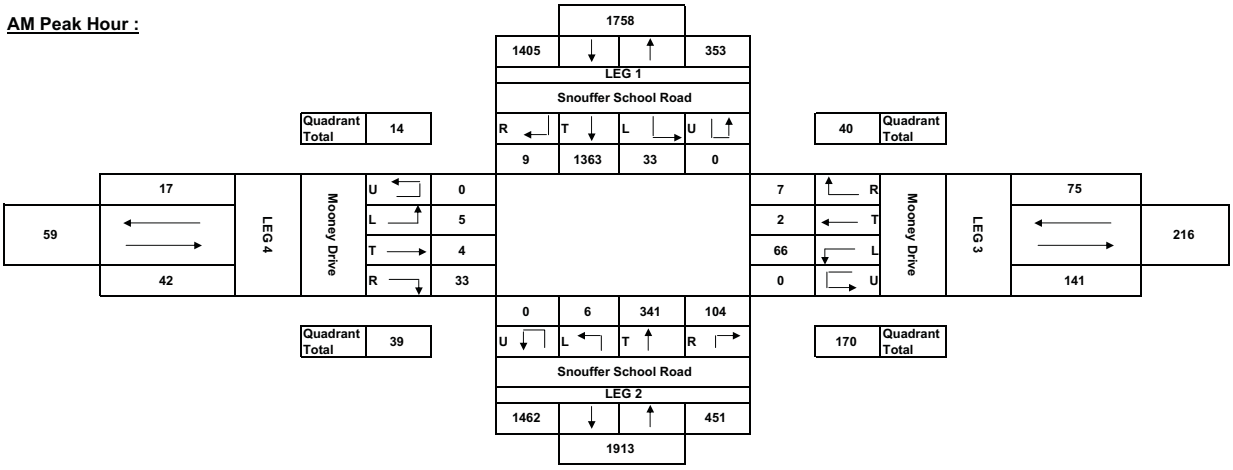

PM Peak Hour :

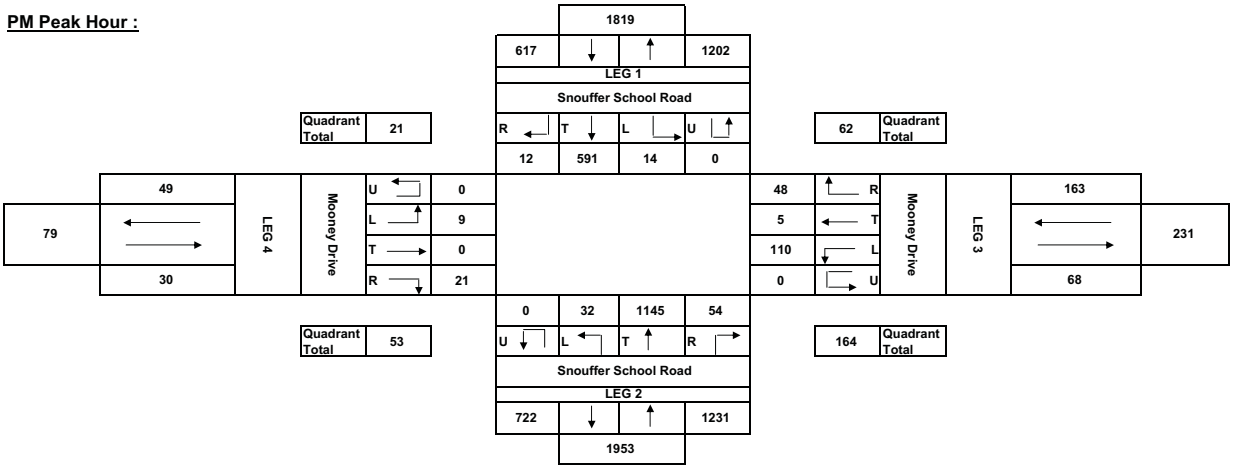

Maryland State Highway Administratior
Highway Information Services Divisior
Turning Counts Study - Field Shee

Request No.:	
Job No.:	

Location:	Snouffer School Road at Centerway Road	County:	Montgomery
Date:	2/26/2029 Tuesday	Town:	
Recorder:	Provided By M-NCPPC	Weather:	
Interval (dd) : (In Minutes)			

AM Peak Hour :

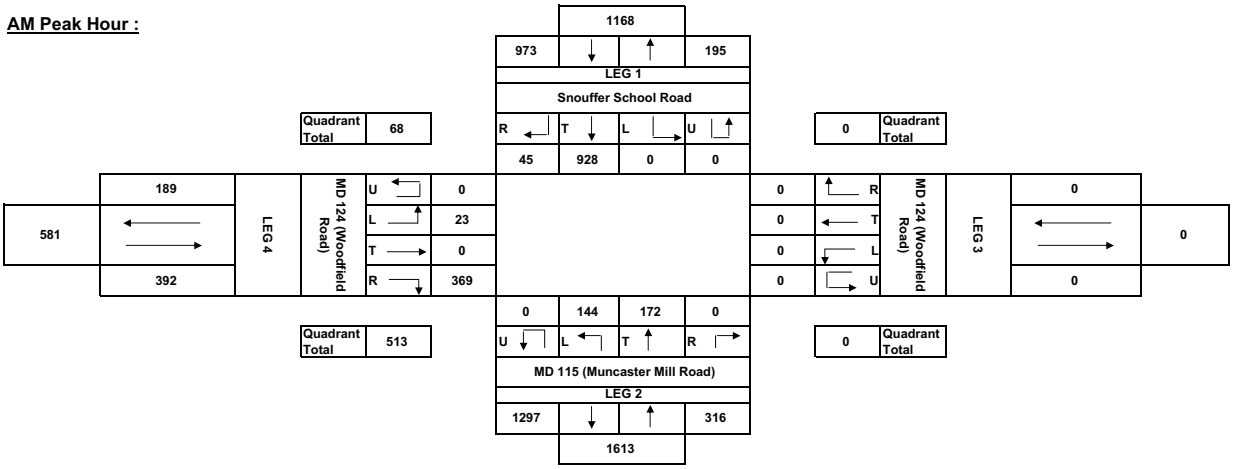

PM Peak Hour :

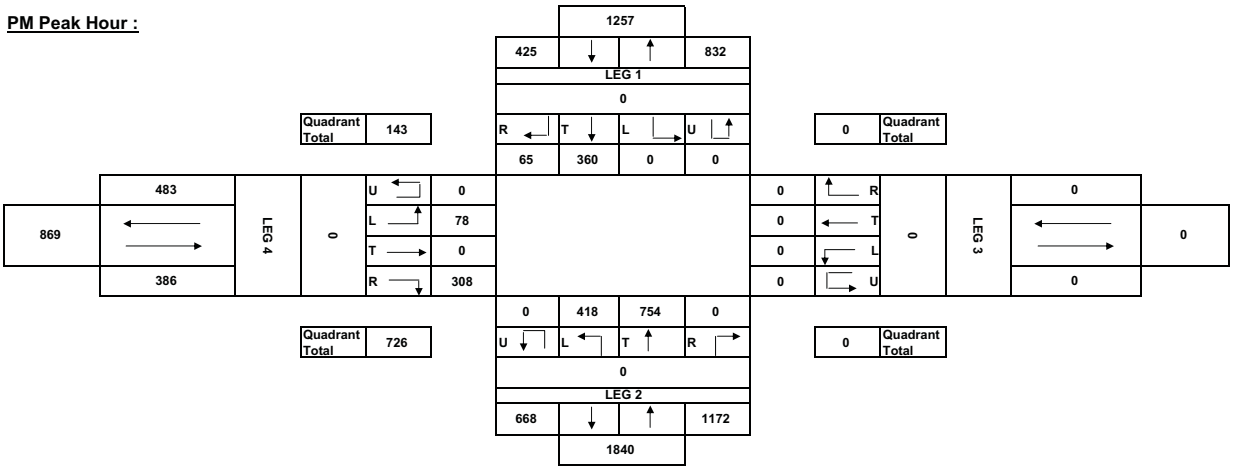

Maryland State Highway Administratior
Highway Information Services Divisior
Turning Counts Study - Field Shee

Request No.:
Job No.:

Location: Snouffer School Road at Alliston Hollow Way
Date: 10/6/2009 Tuesday
Recorder: MMO
Interval (dd) : 15
(In Minutes)

County: Montgomery
Town:
Weather: Clear

PEAK HOURS	AM PERIOD 6AM-10AM	Start	End	Volume	MID DAY 10AM-2PM	Start	End	Volume	PM PERIOD 2PM-7PM	Start	End	Volume
		06:45	07:45	1232		10:00	11:00	0		17:00	18:00	1141

Street Name-->	Snouffer School Road				Snouffer School Road				NONE				Alliston Hollow Way				
HOUR	From North				From South				From East				From West				GRAND
ENDING	L	T	R	TOT	L	T	R	TOT	L	T	R	TOT	L	T	R	TOT	TOTAL
04:00				0				0				0				0	0
04:15				0				0				0				0	0
04:30				0				0				0				0	0
04:45				0				0				0				0	0
05:00				0				0				0				0	0
05:15				0				0				0				0	0
05:30				0				0				0				0	0
05:45				0				0				0				0	0
06:00				0				0				0				0	0
06:15				0				0				0				0	0
06:30				0				0				0				0	0
06:45		181	2	183	0	28		28				0	0		11	11	222
07:00		227	19	246	0	48		48				0	1		12	13	307
07:15		267	0	267	1	37		38				0	1		11	12	317
07:30		248	0	248	4	47		51				0	2		13	15	314
07:45		253	0	253	2	25		27				0	5		9	14	294
08:00		246	0	246	2	32		34				0	4		3	7	287
08:15		260	2	262	1	40		41				0	3		7	10	313
08:30		224	1	225	0	48		48				0	5		8	13	286
08:45		176	1	177	3	46		49				0	5		8	13	239
09:00		98	1	99	0	35		35				0	9		4	13	147
09:15		0	0	0	0	0		0				0	0		0	0	0
09:30		0	0	0	0	0		0				0	0		0	0	0
09:45		0	0	0	0	0		0				0	0		0	0	0
10:00		0	0	0	0	0		0				0	0		0	0	0
10:15		0	0	0	0	0		0				0	0		0	0	0
10:30		0	0	0	0	0		0				0	0		0	0	0
10:45		0	0	0	0	0		0				0	0		0	0	0
11:00		0	0	0	0	0		0				0	0		0	0	0
11:15		0	0	0	0	0		0				0	0		0	0	0
11:30		0	0	0	0	0		0				0	0		0	0	0
11:45		0	0	0	0	0		0				0	0		0	0	0
12:00		0	0	0	0	0		0				0	0		0	0	0
12:15		0	0	0	0	0		0				0	0		0	0	0
12:30		0	0	0	0	0		0				0	0		0	0	0
12:45		0	0	0	0	0		0				0	0		0	0	0
13:00		0	0	0	0	0		0				0	0		0	0	0
13:15		0	0	0	0	0		0				0	0		0	0	0
13:30		0	0	0	0	0		0				0	0		0	0	0
13:45		0	0	0	0	0		0				0	0		0	0	0
14:00		0	0	0	0	0		0				0	0		0	0	0
14:15		0	0	0	0	0		0				0	0		0	0	0
14:30		0	0	0	0	0		0				0	0		0	0	0
14:45		0	0	0	0	0		0				0	0		0	0	0
15:00		0	0	0	0	0		0				0	0		0	0	0
15:15		0	0	0	0	0		0				0	0		0	0	0
15:30		0	0	0	0	0		0				0	0		0	0	0
15:45		0	0	0	0	0		0				0	0		0	0	0
16:00		0	0	0	0	0		0				0	0		0	0	0
16:15		71	6	77	10	151		161				0	8		7	15	253
16:30		75	0	75	9	159		168				0	1		2	3	246
16:45		68	4	72	13	173		186				0	3		5	8	266
17:00		66	2	68	11	170		181				0	3		9	12	261
17:15		82	5	87	8	212		220				0	0		5	5	312
17:30		82	0	82	8	183		191				0	2		8	10	283
17:45		73	3	76	9	184		193				0	7		2	9	278
18:00		59	3	62	11	185		196				0	2		8	10	268
18:15		61	2	63	14	169		183				0	1		1	2	248
18:30		68	1	69	12	122		134				0	1		8	9	212
18:45				0				0				0				0	0
19:00				0				0				0				0	0
19:15				0				0				0				0	0
19:30				0				0				0				0	0
19:45				0				0				0				0	0
20:00				0				0				0				0	0
20:15				0				0				0				0	0
20:30				0				0				0				0	0
20:45				0				0				0				0	0
21:00				0				0				0				0	0
21:15				0				0				0				0	0
21:30				0				0				0				0	0
21:45				0				0				0				0	0
22:00				0				0				0				0	0
22:15				0				0				0				0	0
22:30				0				0				0				0	0
22:45				0				0				0				0	0
23:00				0				0				0				0	0
23:15				0				0				0				0	0
23:30				0				0				0				0	0
23:45				0				0				0				0	0
00:00				0				0				0				0	0
TOTAL	**0**	**2885**	**52**	**2937**	**118**	**2094**	**0**	**2212**	**0**	**0**	**0**	**0**	**63**	**0**	**141**	**204**	**5353**
AM Peak Vol	0	995	19	1014	7	157	0	164	0	0	0	0	9	0	45	54	1232
PM Peak Vol	0	303	10	307	36	749	0	800	0	0	0	0	12	0	24	34	1141

PEDESTRIAN SCHOOL CHILDREN & U-TURN BREAKDOWN

Hour	Snouffer School Road			Snouffer School Road			NONE			Alliston Hollow Way		
Ending	S.C.	PED.	U.T.	S.C.	PED.	U.T.	S.C.	PED.	U.T.	S.C.	PED.	U.T.
04:00												
04:15												
04:30												
04:45												
05:00												
05:15												
05:30												
05:45												
06:00												
06:15												
06:30		0			0						0	
06:45		0			0						0	
07:00		0			0						0	
07:15		0			0						0	
07:30		0			1						0	
07:45		0			0						0	
08:00		0			0						0	
08:15		0			0						0	
08:30		0			0						0	
08:45		0			0						1	
09:00		0			2						0	
09:15		0			0						0	
09:30		0			0						0	
09:45		0			0						0	
10:00		0			0						0	
10:15		0			0						0	
10:30		0			0						0	
10:45		0			0						0	
11:00		0			0						0	
11:15		0			0						0	
11:30		0			0						0	
11:45		0			0						0	
12:00		0			0						0	
12:15		0			0						0	
12:30		0			0						0	
12:45		0			0						0	
13:00		0			0						0	
13:15		0			0						0	
13:30		0			0						0	
13:45		0			0						0	
14:00		0			0						0	
14:15		0			0						0	
14:30		0			0						0	
14:45		0			0						0	
15:00		0			0						0	
15:15		0			0						0	
15:30		0			0						0	
15:45		0			0						0	
16:00		0			0						0	
16:15		0			0						0	
16:30		0			0						0	
16:45		0			1						0	
17:00		0			0						0	
17:15		0			0						0	
17:30		0			0						0	
17:45		0			0						1	
18:00		0			0						1	
18:15												
18:30												
18:45												
19:00												
19:15												
19:30												
19:45												
20:00												
20:15												
20:30												
20:45												
21:00												
21:15												
21:30												
21:45												
22:00												
22:15												
22:30												
22:45												
23:00												
23:15												
23:30												
23:45												
00:00												
TOTAL	**0**	**0**	**0**	**0**	**4**	**0**	**0**	**0**	**0**	**0**	**3**	**0**
AM Peak Vol	0	0	0	0	1	0	0	0	0	0	0	0
PM Peak Vol	0	0	0	0	0	0	0	0	0	0	2	0

Count Summary :

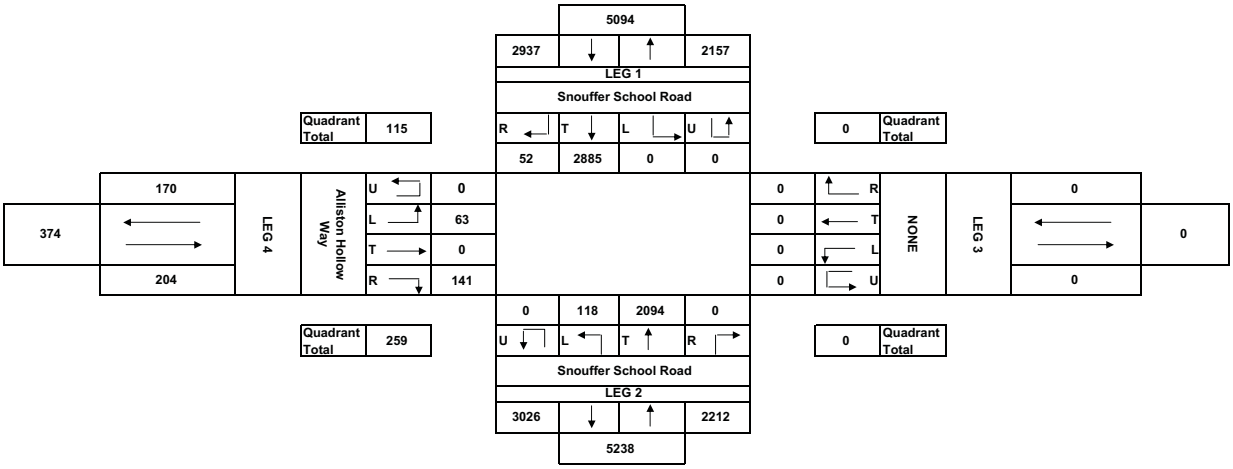

Comments :

AM Peak Hour :

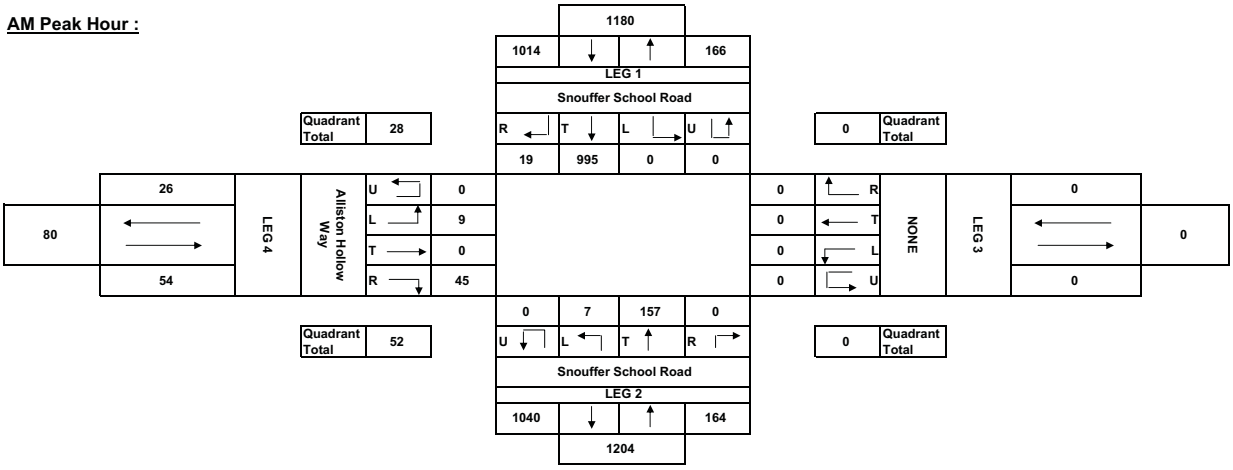

PM Peak Hour :

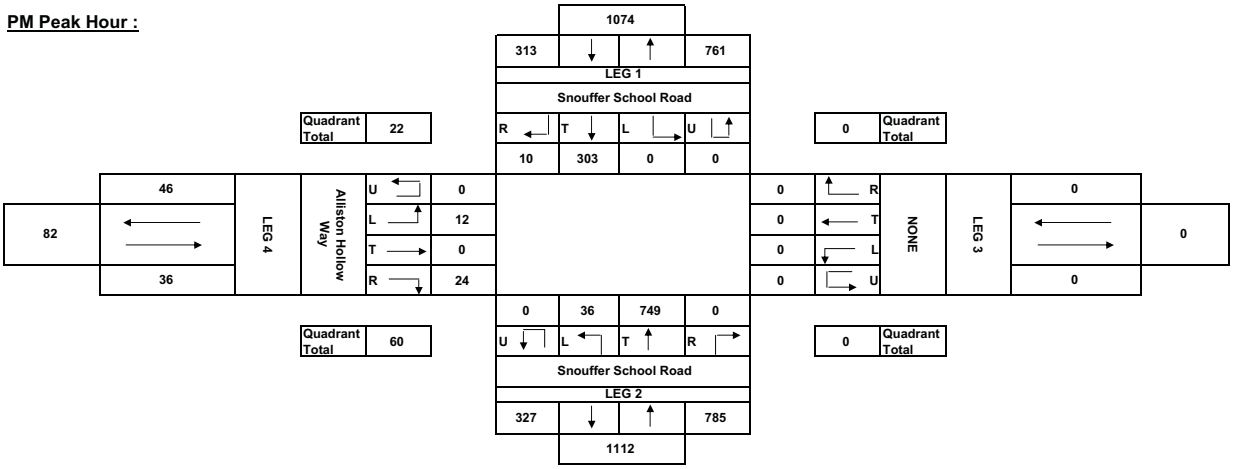

Maryland State Highway Administration
Highway Information Services Division
Turning Counts Study - Field Sheet

Request No.:
Job No.:

Location: Snouffer School Road at Lewisberry Drive
Date: 10/6/2009 Tuesday
Recorder: CND
Interval (dd) : 15
(In Minutes)

County: Montgomery
Town:
Weather: Clear

PEAK HOURS	AM PERIOD 6AM-10AM	Start	End	Volume	MID DAY 10AM-2PM	Start	End	Volume	PM PERIOD 2PM-7PM	Start	End	Volume
		07:00	08:00	1304		10:00	11:00	0		17:00	18:00	1292

Street Name-->	Snouffer School Road				Snouffer School Road				Lewisberry Drive				Chelsey Knoll Drive				
HOUR	From North				From South				From East				From West				GRAND
ENDING	L	T	R	TOT	L	T	R	TOT	L	T	R	TOT	L	T	R	TOT	TOTAL
04:00				0				0				0				0	0
04:15				0				0				0				0	0
04:30				0				0				0				0	0
04:45				0				0				0				0	0
05:00				0				0				0				0	0
05:15				0				0				0				0	0
05:30				0				0				0				0	0
05:45				0				0				0				0	0
06:00				0				0				0				0	0
06:15				0				0				0				0	0
06:30				0				0				0				0	0
06:45	3	138	1	142	0	23	0	23	71	1	16	88	3	0	9	12	265
07:00	6	145	2	153	2	31	1	34	86	0	20	106	4	1	13	18	311
07:15	5	164	4	173	0	36	6	42	66	1	25	92	4	0	11	15	322
07:30	7	175	1	183	1	34	10	45	73	0	21	94	6	0	10	16	338
07:45	4	155	1	160	3	40	4	47	76	0	20	96	4	0	4	8	311
08:00	2	169	2	173	1	33	11	45	75	0	21	96	0	0	19	19	333
08:15	4	137	1	142	1	27	16	44	46	0	22	68	4	0	6	10	264
08:30	3	139	6	148	4	44	5	53	43	0	31	74	1	0	10	11	286
08:45	6	123	1	130	1	39	13	53	52	0	30	82	4	1	8	13	278
09:00	7	85	4	96	2	35	14	51	47	0	20	67	5	2	10	17	231
09:15	0	0	0	0	0	0	0	0	0	0	0	0	0	0	0	0	0
09:30	0	0	0	0	0	0	0	0	0	0	0	0	0	0	0	0	0
09:45	0	0	0	0	0	0	0	0	0	0	0	0	0	0	0	0	0
10:00	0	0	0	0	0	0	0	0	0	0	0	0	0	0	0	0	0
10:15	0	0	0	0	0	0	0	0	0	0	0	0	0	0	0	0	0
10:30	0	0	0	0	0	0	0	0	0	0	0	0	0	0	0	0	0
10:45	0	0	0	0	0	0	0	0	0	0	0	0	0	0	0	0	0
11:00	0	0	0	0	0	0	0	0	0	0	0	0	0	0	0	0	0
11:15	0	0	0	0	0	0	0	0	0	0	0	0	0	0	0	0	0
11:30	0	0	0	0	0	0	0	0	0	0	0	0	0	0	0	0	0
11:45	0	0	0	0	0	0	0	0	0	0	0	0	0	0	0	0	0
12:00	0	0	0	0	0	0	0	0	0	0	0	0	0	0	0	0	0
12:15	0	0	0	0	0	0	0	0	0	0	0	0	0	0	0	0	0
12:30	0	0	0	0	0	0	0	0	0	0	0	0	0	0	0	0	0
12:45	0	0	0	0	0	0	0	0	0	0	0	0	0	0	0	0	0
13:00	0	0	0	0	0	0	0	0	0	0	0	0	0	0	0	0	0
13:15	0	0	0	0	0	0	0	0	0	0	0	0	0	0	0	0	0
13:30	0	0	0	0	0	0	0	0	0	0	0	0	0	0	0	0	0
13:45	0	0	0	0	0	0	0	0	0	0	0	0	0	0	0	0	0
14:00	0	0	0	0	0	0	0	0	0	0	0	0	0	0	0	0	0
14:15	0	0	0	0	0	0	0	0	0	0	0	0	0	0	0	0	0
14:30	0	0	0	0	0	0	0	0	0	0	0	0	0	0	0	0	0
14:45	0	0	0	0	0	0	0	0	0	0	0	0	0	0	0	0	0
15:00	0	0	0	0	0	0	0	0	0	0	0	0	0	0	0	0	0
15:15	0	0	0	0	0	0	0	0	0	0	0	0	0	0	0	0	0
15:30	0	0	0	0	0	0	0	0	0	0	0	0	0	0	0	0	0
15:45	0	0	0	0	0	0	0	0	0	0	0	0	0	0	0	0	0
16:00	0	0	0	0	0	0	0	0	0	0	0	0	0	0	0	0	0
16:15	16	67	6	89	4	117	30	151	16	0	15	31	1	1	3	5	276
16:30	14	41	7	62	7	109	23	139	18	1	14	33	4	0	3	7	241
16:45	20	53	5	78	6	118	25	149	17	1	22	40	7	0	3	10	277
17:00	17	59	5	81	6	110	37	153	14	0	22	36	4	0	2	6	276
17:15	20	50	8	78	8	114	41	163	13	0	24	37	1	0	7	8	286
17:30	22	64	9	95	10	132	42	184	30	1	34	65	3	1	6	10	354
17:45	18	59	9	86	8	111	54	173	20	0	18	38	10	0	3	13	310
18:00	14	58	7	79	5	162	36	203	20	0	29	49	5	3	3	11	342
18:15	19	52	7	78	2	110	40	152	16	1	27	44	2	2	1	5	279
18:30	15	47	5	67	1	106	48	155	18	1	16	35	3	1	2	6	263
18:45				0				0				0				0	0
19:00				0				0				0				0	0
19:15				0				0				0				0	0
19:30				0				0				0				0	0
19:45				0				0				0				0	0
20:00				0				0				0				0	0
20:15				0				0				0				0	0
20:30				0				0				0				0	0
20:45				0				0				0				0	0
21:00				0				0				0				0	0
21:15				0				0				0				0	0
21:30				0				0				0				0	0
21:45				0				0				0				0	0
22:00				0				0				0				0	0
22:15				0				0				0				0	0
22:30				0				0				0				0	0
22:45				0				0				0				0	0
23:00				0				0				0				0	0
23:15				0				0				0				0	0
23:30				0				0				0				0	0
23:45				0				0				0				0	0
00:00				0				0				0				0	0
TOTAL	**222**	**1980**	**91**	**2293**	**72**	**1531**	**456**	**2059**	**817**	**7**	**447**	**1271**	**75**	**12**	**133**	**220**	**5843**
AM Peak Vol	18	663	8	689	5	143	31	179	290	1	87	378	14	0	44	58	1304
PM Peak Vol	74	232	31	338	32	467	173	723	83	1	105	189	18	4	18	42	1292

PEDESTRIAN SCHOOL CHILDREN & U-TURN BREAKDOWN

Hour	Snouffer School Road			Snouffer School Road			Lewisberry Drive			Chelsey Knoll Drive		
Ending	S.C.	PED.	U.T.	S.C.	PED.	U.T.	S.C.	PED.	U.T.	S.C.	PED.	U.T.
04:00												
04:15												
04:30												
04:45												
05:00												
05:15												
05:30												
05:45												
06:00												
06:15												
06:30												
06:45		0			0			0			0	
07:00		0			0			0			1	
07:15		**0**			**2**			**0**			**1**	
07:30		**0**			**0**			**0**			**0**	
07:45		**1**			**2**			**2**			**0**	
08:00		**0**			**1**			**0**			**0**	
08:15		0			1			0			0	
08:30		0			0			0			0	
08:45		0			1			0			0	
09:00		0			1			1			0	
09:15		0			0			0			0	
09:30		0			0			0			0	
09:45		0			0			0			0	
10:00		0			0			0			0	
10:15		**0**			**0**			**0**			**0**	
10:30		**0**			**0**			**0**			**0**	
10:45		**0**			**0**			**0**			**0**	
11:00		**0**			**0**			**0**			**0**	
11:15		0			0			0			0	
11:30		0			0			0			0	
11:45		0			0			0			0	
12:00		0			0			0			0	
12:15		0			0			0			0	
12:30		0			0			0			0	
12:45		0			0			0			0	
13:00		0			0			0			0	
13:15		0			0			0			0	
13:30		0			0			0			0	
13:45		0			0			0			0	
14:00		0			0			0			0	
14:15		0			0			0			0	
14:30		0			0			0			0	
14:45		0			0			0			0	
15:00		0			0			0			0	
15:15		0			0			0			0	
15:30		0			0			0			0	
15:45		0			0			0			0	
16:00		0			0			0			0	
16:15		0			0			0			0	
16:30		0			2			1			1	
16:45		0			0			0			1	
17:00		0			1			0			0	
17:15		**0**			**0**			**0**			**0**	
17:30		**0**			**1**			**0**			**0**	
17:45		**0**			**2**			**0**			**0**	
18:00		**1**			**0**			**0**			**0**	
18:15		0			0			0			0	
18:30		0			0			0			0	
18:45												
19:00												
19:15												
19:30												
19:45												
20:00												
20:15												
20:30												
20:45												
21:00												
21:15												
21:30												
21:45												
22:00												
22:15												
22:30												
22:45												
23:00												
23:15												
23:30												
23:45												
00:00												
TOTAL	**0**	**2**	**0**	**0**	**14**	**0**	**0**	**4**	**0**	**0**	**4**	**0**
AM Peak Vol	0	1	0	0	5	0	0	2	0	0	1	0
PM Peak Vol	0	1	0	0	3	0	0	0	0	0	0	0

Count Summary :

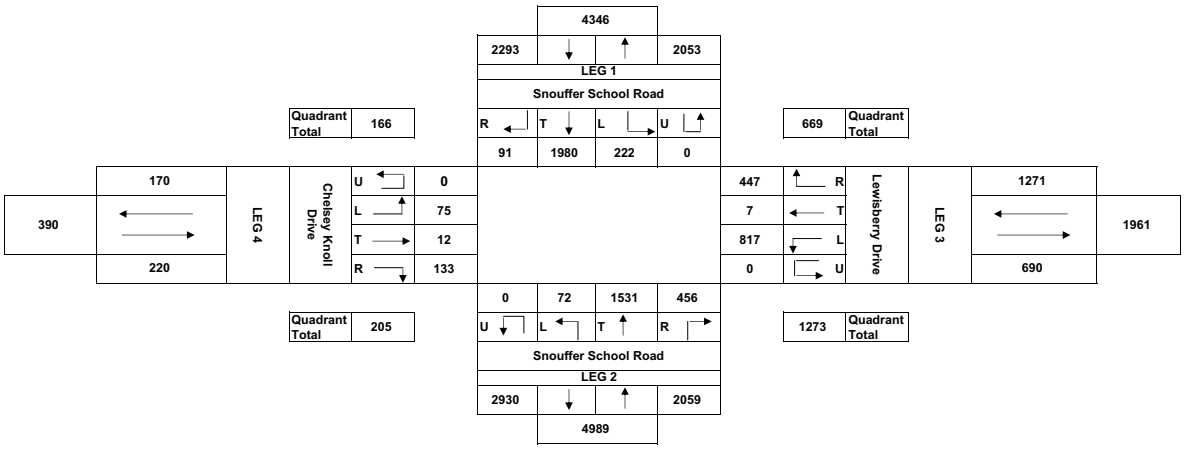

Comments :

AM Peak Hour :

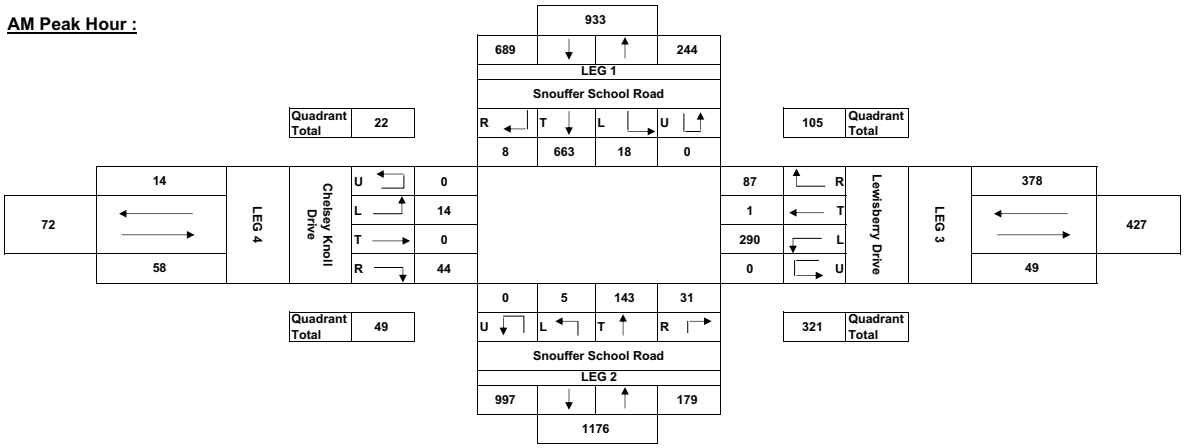

PM Peak Hour :

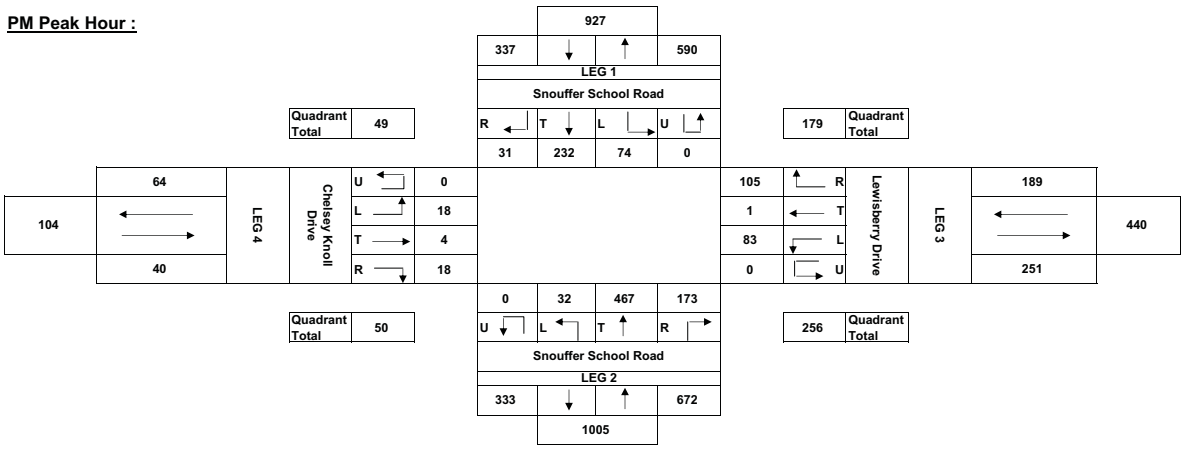

Maryland State Highway Administratior
Highway Information Services Divisior
Turning Counts Study - Field Shee

Request No.:
Job No.:

Location: Snouffer School Road at Goshen Roac
Date: 10/1/2009 Thursday
Recorder: MMO
Interval (dd) : 15
(In Minutes)

County: Montgomery
Town:
Weather: Clear

PEAK HOURS	AM PEIRIOD 6AM-10AM	Start	End	Volume	MID DAY 10AM-2PM	Start	End	Volume	PM PERIOD 2PM-7PM	Start	End	Volume
		06:45	07:45	1792		10:00	11:00	0		17:00	18:00	2334

Street Name-->	Goshen Road				Goshen Road				Snouffer School Road				Wightman Road				
HOUR	From North				From South				From East				From West				GRAND
ENDING	L	T	R	TOT	L	T	R	TOT	L	T	R	TOT	L	T	R	TOT	TOTAL
04:00				0				0				0				0	0
04:15				0				0				0				0	0
04:30				0				0				0				0	0
04:45				0				0				0				0	0
05:00				0				0				0				0	0
05:15				0				0				0				0	0
05:30				0				0				0				0	0
05:45				0				0				0				0	0
06:00				0				0				0				0	0
06:15	0	0	0	0				0				0	0	0	0	0	0
06:30	0	0	0	0				0				0	0	0	0	0	0
06:45	26	58	15	99	7	18	4	29	27	37	8	72	23	74	10	107	307
07:00	39	78	51	168	11	27	18	56	32	30	21	83	26	80	18	124	431
07:15	39	75	34	148	7	28	24	59	24	39	4	67	44	81	21	146	420
07:30	45	112	39	196	9	33	17	59	55	31	2	88	24	97	20	141	484
07:45	42	111	25	178	9	28	11	48	32	38	13	83	31	104	13	148	457
08:00	42	84	32	158	5	40	16	61	33	29	7	69	25	71	20	116	404
08:15	27	88	38	153	6	48	29	83	31	25	7	63	29	92	21	142	441
08:30	38	82	30	150	10	43	26	79	39	31	9	79	39	78	16	133	441
08:45	33	89	31	153	6	50	14	70	22	26	13	61	36	84	16	136	420
09:00	23	77	28	128	5	48	14	67	36	35	12	83	38	50	23	111	389
09:15	0	0	0	0	0	0	0	0	0	0	0	0	0	0	0	0	0
09:30	0	0	0	0	0	0	0	0	0	0	0	0	0	0	0	0	0
09:45	0	0	0	0	0	0	0	0	0	0	0	0	0	0	0	0	0
10:00	0	0	0	0	0	0	0	0	0	0	0	0	0	0	0	0	0
10:15	0	0	0	0	0	0	0	0	0	0	0	0	0	0	0	0	0
10:30	0	0	0	0	0	0	0	0	0	0	0	0	0	0	0	0	0
10:45	0	0	0	0	0	0	0	0	0	0	0	0	0	0	0	0	0
11:00	0	0	0	0	0	0	0	0	0	0	0	0	0	0	0	0	0
11:15	0	0	0	0	0	0	0	0	0	0	0	0	0	0	0	0	0
11:30	0	0	0	0	0	0	0	0	0	0	0	0	0	0	0	0	0
11:45	0	0	0	0	0	0	0	0	0	0	0	0	0	0	0	0	0
12:00	0	0	0	0	0	0	0	0	0	0	0	0	0	0	0	0	0
12:15	0	0	0	0	0	0	0	0	0	0	0	0	0	0	0	0	0
12:30	0	0	0	0	0	0	0	0	0	0	0	0	0	0	0	0	0
12:45	0	0	0	0	0	0	0	0	0	0	0	0	0	0	0	0	0
13:00	0	0	0	0	0	0	0	0	0	0	0	0	0	0	0	0	0
13:15	0	0	0	0	0	0	0	0	0	0	0	0	0	0	0	0	0
13:30	0	0	0	0	0	0	0	0	0	0	0	0	0	0	0	0	0
13:45	0	0	0	0	0	0	0	0	0	0	0	0	0	0	0	0	0
14:00	0	0	0	0	0	0	0	0	0	0	0	0	0	0	0	0	0
14:15	0	0	0	0	0	0	0	0	0	0	0	0	0	0	0	0	0
14:30	0	0	0	0	0	0	0	0	0	0	0	0	0	0	0	0	0
14:45	0	0	0	0	0	0	0	0	0	0	0	0	0	0	0	0	0
15:00	0	0	0	0	0	0	0	0	0	0	0	0	0	0	0	0	0
15:15	0	0	0	0	0	0	0	0	0	0	0	0	0	0	0	0	0
15:30	0	0	0	0	0	0	0	0	0	0	0	0	0	0	0	0	0
15:45	0	0	0	0	0	0	0	0	0	0	0	0	0	0	0	0	0
16:00	0	0	0	0	0	0	0	0	0	0	0	0	0	0	0	0	0
16:15	14	51	28	93	20	84	34	138	38	78	11	127	58	59	25	142	500
16:30	10	42	20	72	20	90	32	142	33	67	19	119	65	45	11	121	454
16:45	21	59	16	96	17	91	23	131	43	74	16	133	49	76	21	146	506
17:00	6	44	26	76	17	92	49	158	57	76	7	140	90	57	9	156	530
17:15	7	58	38	103	21	84	37	142	48	115	20	183	66	63	17	146	574
17:30	15	47	29	91	27	104	32	163	78	98	27	203	71	66	25	162	619
17:45	16	53	31	100	13	90	41	144	73	109	14	196	55	60	18	133	573
18:00	16	55	35	106	39	88	42	169	54	88	15	157	57	59	20	136	568
18:15	8	48	26	82	29	86	31	146	63	82	22	167	56	49	19	124	519
18:30	8	55	26	89	26	86	38	150	49	55	12	116	45	50	10	105	460
18:45				0				0				0				0	0
19:00				0				0				0				0	0
19:15				0				0				0				0	0
19:30				0				0				0				0	0
19:45				0				0				0				0	0
20:00				0				0				0				0	0
20:15				0				0				0				0	0
20:30				0				0				0				0	0
20:45				0				0				0				0	0
21:00				0				0				0				0	0
21:15				0				0				0				0	0
21:30				0				0				0				0	0
21:45				0				0				0				0	0
22:00				0				0				0				0	0
22:15				0				0				0				0	0
22:30				0				0				0				0	0
22:45				0				0				0				0	0
23:00				0				0				0				0	0
23:15				0				0				0				0	0
23:30				0				0				0				0	0
23:45				0				0				0				0	0
00:00				0				0				0				0	0
TOTAL	**475**	**1366**	**598**	**2439**	**304**	**1258**	**532**	**2094**	**867**	**1163**	**259**	**2289**	**927**	**1395**	**353**	**2675**	**9497**
AM Peak Vol	165	376	149	690	36	116	70	222	143	138	40	321	125	362	72	559	1792
PM Peak Vol	54	213	133	400	100	366	152	618	253	410	76	739	249	248	80	577	2334

PEDESTRIAN SCHOOL CHILDREN & U-TURN BREAKDOWN

Hour	Goshen Road			Goshen Road			Snouffer School Road			Wightman Road		
Ending	S.C.	PED.	U.T.	S.C.	PED.	U.T.	S.C.	PED.	U.T.	S.C.	PED.	U.T.
04:00												
04:15												
04:30												
04:45												
05:00												
05:15												
05:30												
05:45												
06:00												
06:15												
06:30		1			0			0			0	
06:45		0			0			0			0	
07:00		**1**			**1**			**1**			**4**	
07:15		**0**			**0**			**0**			**0**	
07:30		**1**			**0**			**0**			**1**	
07:45		**1**			**0**			**0**			**3**	
08:00		4			0			0			0	
08:15		1			0			0			1	
08:30		1			2			0			1	
08:45		0			0			0			0	
09:00		0			0			0			0	
09:15		0			0			0			0	
09:30		0			0			0			0	
09:45		0			0			0			0	
10:00		0			0			0			0	
10:15		**0**			**0**			**0**			**0**	
10:30		**0**			**0**			**0**			**0**	
10:45		**0**			**0**			**0**			**0**	
11:00		**0**			**0**			**0**			**0**	
11:15		0			0			0			0	
11:30		0			0			0			0	
11:45		0			0			0			0	
12:00		0			0			0			0	
12:15		0			0			0			0	
12:30		0			0			0			0	
12:45		0			0			0			0	
13:00		0			0			0			0	
13:15		0			0			0			0	
13:30		0			0			0			0	
13:45		0			0			0			0	
14:00		0			0			0			0	
14:15		0			0			0			0	
14:30		0			0			0			0	
14:45		0			0			0			0	
15:00		0			0			0			0	
15:15		0			0			0			0	
15:30		0			0			0			0	
15:45		0			0			0			0	
16:00		0			0			0			0	
16:15		3			1			1			1	
16:30		0			0			1			1	
16:45		2			0			0			1	
17:00		6			0			0			3	
17:15		**0**			**0**			**0**			**3**	
17:30		**2**			**0**			**0**			**5**	
17:45		**8**			**0**			**0**			**1**	
18:00		**4**			**0**			**0**			**1**	
18:15		0			0			0			1	
18:30		4			0			0			1	
18:45		0			0			0			0	
19:00												
19:15												
19:30												
19:45												
20:00												
20:15												
20:30												
20:45												
21:00												
21:15												
21:30												
21:45												
22:00												
22:15												
22:30												
22:45												
23:00												
23:15												
23:30												
23:45												
00:00												
TOTAL	**0**	**39**	**0**	**0**	**4**	**0**	**0**	**3**	**0**	**0**	**28**	**0**
AM Peak Vol	0	3	0	0	1	0	0	1	0	0	8	0
PM Peak Vol	0	14	0	0	0	0	0	0	0	0	10	0

Count Summary :

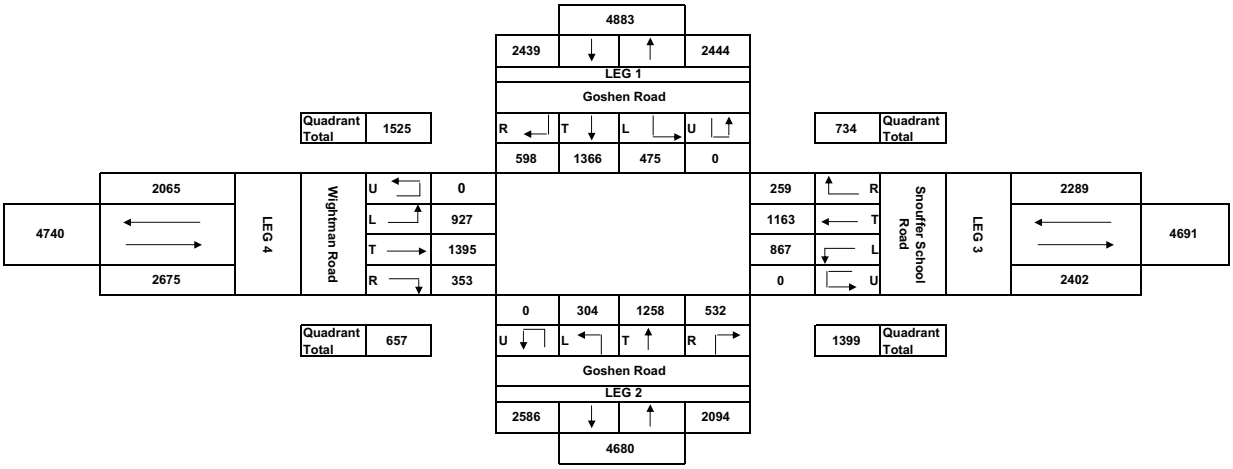

Comments :

AM Peak Hour :

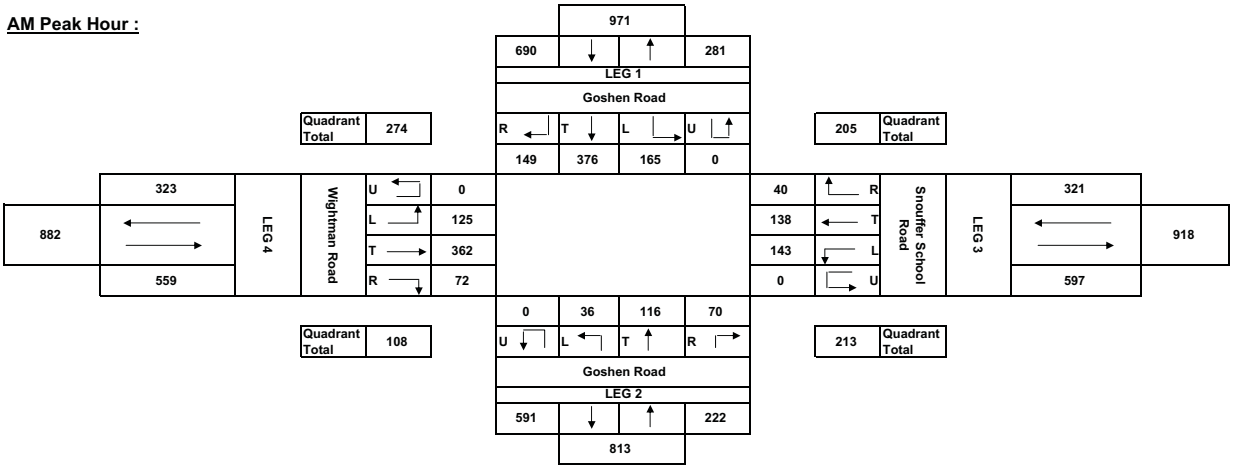

PM Peak Hour :

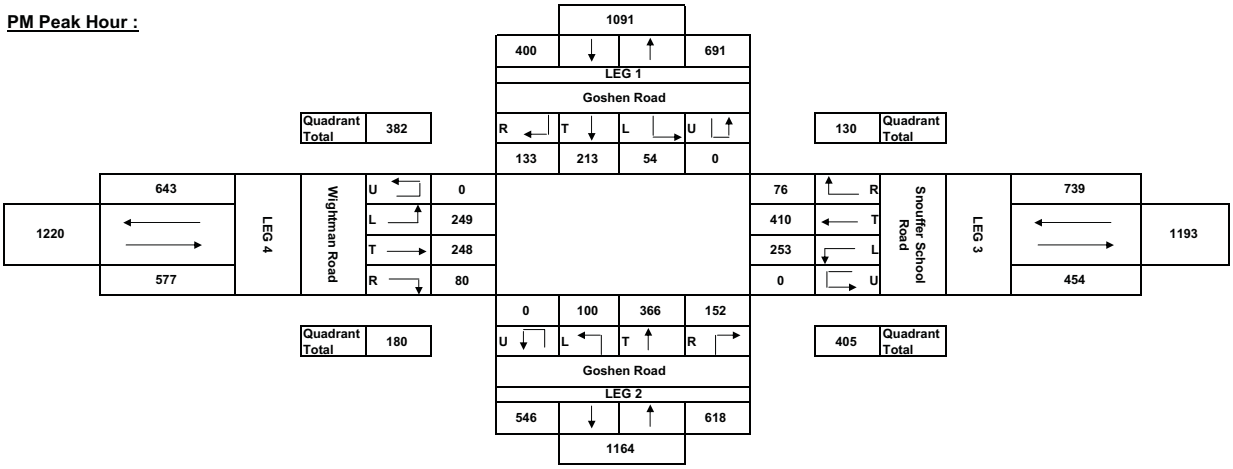

Maryland State Highway Administration
Highway Information Services Division
Turning Counts Study - Field Sheet

Request No.:
Job No.:

Location: Centerway Road at Goshen Road
Date: 9/30/2009 Wednesday
Recorder: MCG
Interval (dd) : 15
(In Minutes)

County: Montgomery
Town:
Weather: Clear

PEAK HOURS	AM PERIOD 6AM-10AM	Start	End	Volume	MID DAY 10AM-2PM	Start	End	Volume	PM PERIOD 2PM-7PM	Start	End	Volume
		07:30	08:30	1875		10:00	11:00	0		17:00	18:00	2223

Street Name-->	Goshen Road				Goshen Road				Centerway Road				Centerway Road				
HOUR	From North				From South				From East				From West				GRAND
ENDING	L	T	R	TOT	L	T	R	TOT	L	T	R	TOT	L	T	R	TOT	TOTAL
04:00				0				0				0				0	0
04:15				0				0				0				0	0
04:30				0				0				0				0	0
04:45				0				0				0				0	0
05:00				0				0				0				0	0
05:15				0				0				0				0	0
05:30				0				0				0				0	0
05:45				0				0				0				0	0
06:00				0				0				0				0	0
06:15				0				0				0				0	0
06:30				0				0				0				0	0
06:45	9	141	7	157	9	29	4	42	17	35	3	55	1	34	34	69	323
07:00	7	158	15	180	16	32	4	52	14	27	7	48	9	44	33	86	366
07:15	18	146	20	184	21	32	8	61	10	39	4	53	5	57	31	93	391
07:30	10	143	28	181	19	35	8	62	9	32	3	44	4	59	39	102	389
07:45	**19**	**185**	**20**	**224**	**23**	**49**	**9**	**81**	**5**	**40**	**7**	**52**	**11**	**69**	**43**	**123**	**480**
08:00	**15**	**179**	**25**	**219**	**20**	**58**	**18**	**96**	**11**	**32**	**13**	**56**	**9**	**71**	**42**	**122**	**493**
08:15	**23**	**162**	**25**	**210**	**22**	**39**	**9**	**70**	**10**	**33**	**5**	**48**	**5**	**57**	**40**	**102**	**430**
08:30	**12**	**180**	**24**	**216**	**25**	**52**	**8**	**85**	**13**	**46**	**7**	**66**	**14**	**49**	**42**	**105**	**472**
08:45	17	158	39	214	18	62	4	84	15	48	6	69	5	63	40	108	475
09:00	15	182	24	221	20	67	12	99	17	51	15	83	15	44	33	92	495
09:15	0	0	0	0	0	0	0	0	0	0	0	0	0	0	0	0	0
09:30	0	0	0	0	0	0	0	0	0	0	0	0	0	0	0	0	0
09:45	0	0	0	0	0	0	0	0	0	0	0	0	0	0	0	0	0
10:00	0	0	0	0	0	0	0	0	0	0	0	0	0	0	0	0	0
10:15	**0**	**0**	**0**	**0**	**0**	**0**	**0**	**0**	**0**	**0**	**0**	**0**	**0**	**0**	**0**	**0**	**0**
10:30	**0**	**0**	**0**	**0**	**0**	**0**	**0**	**0**	**0**	**0**	**0**	**0**	**0**	**0**	**0**	**0**	**0**
10:45	**0**	**0**	**0**	**0**	**0**	**0**	**0**	**0**	**0**	**0**	**0**	**0**	**0**	**0**	**0**	**0**	**0**
11:00	**0**	**0**	**0**	**0**	**0**	**0**	**0**	**0**	**0**	**0**	**0**	**0**	**0**	**0**	**0**	**0**	**0**
11:15	0	0	0	0	0	0	0	0	0	0	0	0	0	0	0	0	0
11:30	0	0	0	0	0	0	0	0	0	0	0	0	0	0	0	0	0
11:45	0	0	0	0	0	0	0	0	0	0	0	0	0	0	0	0	0
12:00	0	0	0	0	0	0	0	0	0	0	0	0	0	0	0	0	0
12:15	0	0	0	0	0	0	0	0	0	0	0	0	0	0	0	0	0
12:30	0	0	0	0	0	0	0	0	0	0	0	0	0	0	0	0	0
12:45	0	0	0	0	0	0	0	0	0	0	0	0	0	0	0	0	0
13:00	0	0	0	0	0	0	0	0	0	0	0	0	0	0	0	0	0
13:15	0	0	0	0	0	0	0	0	0	0	0	0	0	0	0	0	0
13:30	0	0	0	0	0	0	0	0	0	0	0	0	0	0	0	0	0
13:45	0	0	0	0	0	0	0	0	0	0	0	0	0	0	0	0	0
14:00	0	0	0	0	0	0	0	0	0	0	0	0	0	0	0	0	0
14:15	0	0	0	0	0	0	0	0	0	0	0	0	0	0	0	0	0
14:30	0	0	0	0	0	0	0	0	0	0	0	0	0	0	0	0	0
14:45	0	0	0	0	0	0	0	0	0	0	0	0	0	0	0	0	0
15:00	0	0	0	0	0	0	0	0	0	0	0	0	0	0	0	0	0
15:15	0	0	0	0	0	0	0	0	0	0	0	0	0	0	0	0	0
15:30	0	0	0	0	0	0	0	0	0	0	0	0	0	0	0	0	0
15:45	0	0	0	0	0	0	0	0	0	0	0	0	0	0	0	0	0
16:00	0	0	0	0	0	0	0	0	0	0	0	0	0	0	0	0	0
16:15	13	76	15	104	29	121	18	168	12	56	16	84	20	61	21	102	458
16:30	8	82	14	104	40	168	18	226	16	62	11	89	27	59	23	109	528
16:45	10	76	26	112	27	148	21	196	17	74	7	98	21	58	24	103	509
17:00	15	75	17	107	55	143	17	215	17	64	8	89	17	58	29	104	515
17:15	**8**	**81**	**19**	**108**	**32**	**139**	**23**	**194**	**19**	**66**	**10**	**95**	**26**	**67**	**30**	**123**	**520**
17:30	**6**	**84**	**16**	**106**	**37**	**176**	**22**	**235**	**12**	**69**	**18**	**99**	**17**	**72**	**28**	**117**	**557**
17:45	**13**	**75**	**24**	**112**	**50**	**178**	**23**	**251**	**20**	**77**	**14**	**111**	**14**	**60**	**22**	**96**	**570**
18:00	**9**	**84**	**24**	**117**	**54**	**138**	**31**	**223**	**12**	**99**	**16**	**127**	**25**	**51**	**33**	**109**	**576**
18:15	0	0	0	0	0	0	0	0	0	0	0	0	0	0	0	0	0
18:30	0	0	0	0	0	0	0	0	0	0	0	0	0	0	0	0	0
18:45				0				0				0				0	0
19:00				0				0				0				0	0
19:15				0				0				0				0	0
19:30				0				0				0				0	0
19:45				0				0				0				0	0
20:00				0				0				0				0	0
20:15				0				0				0				0	0
20:30				0				0				0				0	0
20:45				0				0				0				0	0
21:00				0				0				0				0	0
21:15				0				0				0				0	0
21:30				0				0				0				0	0
21:45				0				0				0				0	0
22:00				0				0				0				0	0
22:15				0				0				0				0	0
22:30				0				0				0				0	0
22:45				0				0				0				0	0
23:00				0				0				0				0	0
23:15				0				0				0				0	0
23:30				0				0				0				0	0
23:45				0				0				0				0	0
00:00				0				0				0				0	0
TOTAL	**227**	**2267**	**382**	**2876**	**517**	**1666**	**257**	**2440**	**246**	**950**	**170**	**1366**	**245**	**1033**	**587**	**1865**	**8547**
AM Peak Vol	69	706	94	869	90	198	44	332	39	151	32	222	39	246	167	452	1875
PM Peak Vol	36	324	83	443	173	631	99	903	63	311	58	432	82	250	113	445	2223

PEDESTRIAN SCHOOL CHILDREN & U-TURN BREAKDOWN

Hour	Goshen Road			Goshen Road			Centerway Road			Centerway Road		
Ending	S.C.	PED.	U.T.	S.C.	PED.	U.T.	S.C.	PED.	U.T.	S.C.	PED.	U.T.
04:00												
04:15												
04:30												
04:45												
05:00												
05:15												
05:30												
05:45												
06:00												
06:15												
06:30												
06:45		0			0			2			0	
07:00		0			1			4			0	
07:15		0			0			1			1	
07:30		0			0			0			0	
07:45		**0**			**0**			**1**			**1**	
08:00		**0**			**1**			**2**			**0**	
08:15		**2**			**0**			**1**			**2**	
08:30		**0**			**1**			**1**			**0**	
08:45		0			0			2			0	
09:00		0			0			3			0	
09:15		0			0			0			0	
09:30		0			0			0			0	
09:45		0			0			0			0	
10:00		0			0			0			0	
10:15		**0**			**0**			**0**			**0**	
10:30		**0**			**0**			**0**			**0**	
10:45		**0**			**0**			**0**			**0**	
11:00		**0**			**0**			**0**			**0**	
11:15		0			0			0			0	
11:30		0			0			0			0	
11:45		0			0			0			0	
12:00		0			0			0			0	
12:15		0			0			0			0	
12:30		0			0			0			0	
12:45		0			0			0			0	
13:00		0			0			0			0	
13:15		0			0			0			0	
13:30		0			0			0			0	
13:45		0			0			0			0	
14:00		0			0			0			0	
14:15		0			0			0			0	
14:30		0			0			0			0	
14:45		0			0			0			0	
15:00		0			0			0			0	
15:15		0			0			0			0	
15:30		0			0			0			0	
15:45		0			0			0			0	
16:00		0			0			0			0	
16:15		0			0			0			0	
16:30		0			0			2			0	
16:45		0			0			0			0	
17:00		0			0			3			0	
17:15		**0**			**0**			**3**			**0**	
17:30		**0**			**3**			**8**			**0**	
17:45		**0**			**0**			**10**			**0**	
18:00		**0**			**0**			**4**			**0**	
18:15		0			0			0			1	
18:30		0			0			0			2	
18:45												
19:00												
19:15												
19:30												
19:45												
20:00												
20:15												
20:30												
20:45												
21:00												
21:15												
21:30												
21:45												
22:00												
22:15												
22:30												
22:45												
23:00												
23:15												
23:30												
23:45												
00:00												
TOTAL	**0**	**2**	**0**	**0**	**6**	**0**	**0**	**47**	**0**	**0**	**7**	**0**
AM Peak Vol	0	2	0	0	2	0	0	5	0	0	3	0
PM Peak Vol	0	0	0	0	3	0	0	25	0	0	0	0

Count Summary :

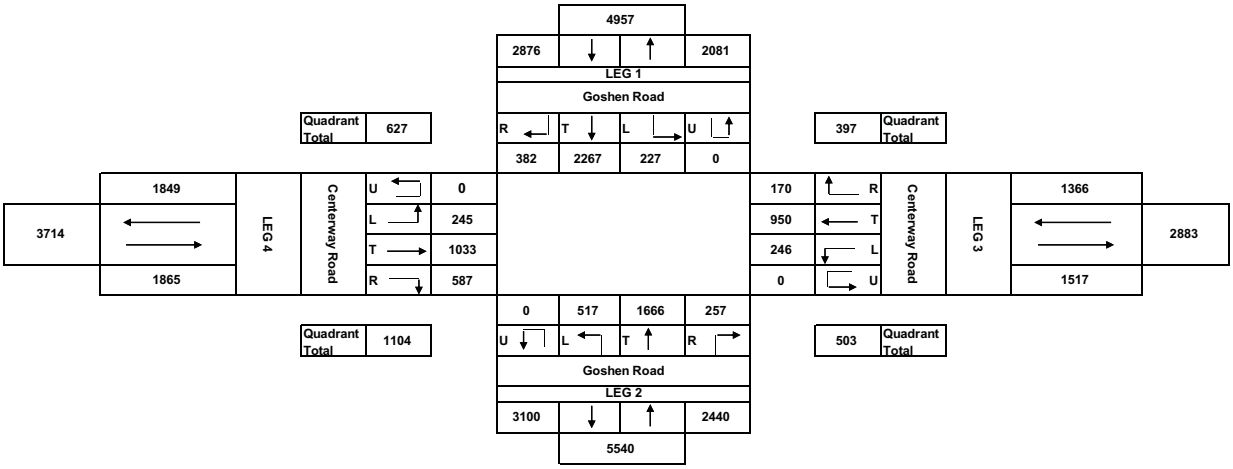

Comments :

AM Peak Hour :

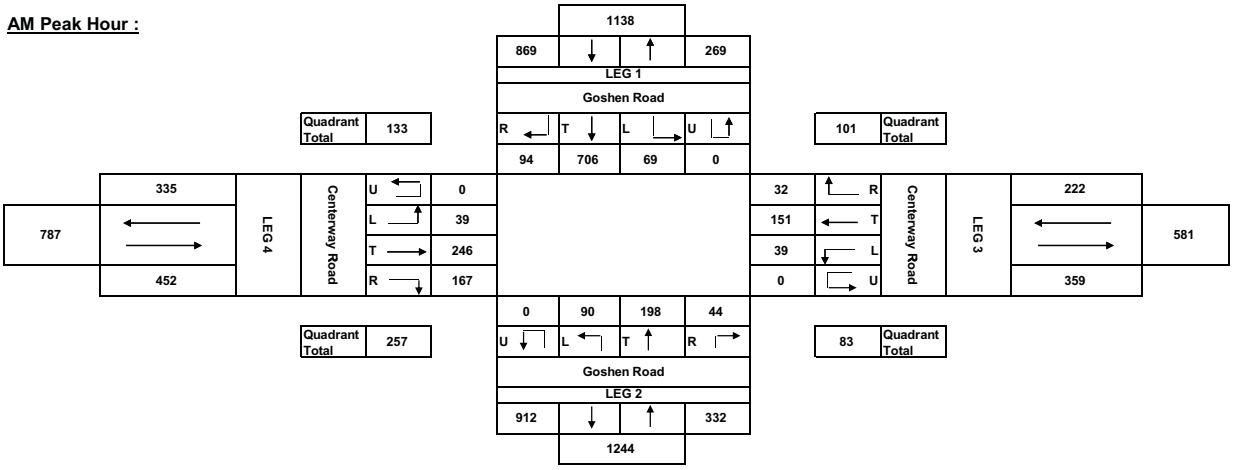

PM Peak Hour :

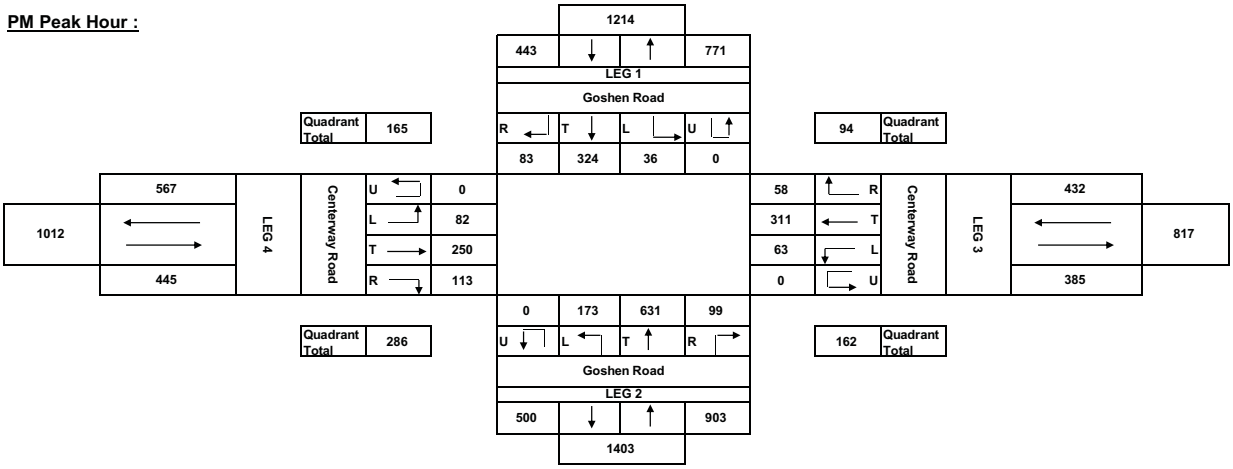

Maryland State Highway Administratior
Highway Information Services Divisior
Turning Counts Study - Field Shee

Request No.:
Job No.:

Location: Centerway Road at Montgomery Village Avenue
Date: 9/30/2009 Wednesday
Recorder: MMO/CND
Interval (dd) : 15
(In Minutes)

County: Montgomery
Town:
Weather: Clear

PEAK HOURS	AM PERIOD 6AM-10AM	Start	End	Volume	MID DAY 10AM-2PM	Start	End	Volume	PM PERIOD 2PM-7PM	Start	End	Volume
		07:30	08:30	1803		10:00	11:00	0		17:00	18:00	2194

Street Name-->	Montgomery Village Avenue				Montgomery Village Avenue				Centerway Road				Shopping Ctr.				
HOUR	From North				From South				From East				From West				GRAND
ENDING	L	T	R	TOT	L	T	R	TOT	L	T	R	TOT	L	T	R	TOT	TOTAL
04:00				0				0				0				0	0
04:15				0				0				0				0	0
04:30				0				0				0				0	0
04:45				0				0				0				0	0
05:00				0				0				0				0	0
05:15				0				0				0				0	0
05:30				0				0				0				0	0
05:45				0				0				0				0	0
06:00				0				0				0				0	0
06:15				0				0				0				0	0
06:30				0				0				0				0	0
06:45	18	186	3	207	7	28	14	49	46	12	3	61	1	4	15	20	337
07:00	7	185	7	199	5	55	21	81	67	9	7	83	1	9	11	21	384
07:15	23	234	4	261	5	53	30	88	73	18	9	100	2	12	13	27	476
07:30	23	201	11	235	11	52	21	84	63	17	7	87	2	8	16	26	432
07:45	**24**	**245**	**14**	**283**	**6**	**64**	**32**	**102**	**70**	**9**	**4**	**83**	**0**	**10**	**7**	**17**	**485**
08:00	**20**	**158**	**7**	**185**	**9**	**54**	**32**	**95**	**49**	**16**	**5**	**70**	**3**	**9**	**13**	**25**	**375**
08:15	**29**	**272**	**8**	**309**	**9**	**69**	**33**	**111**	**53**	**13**	**3**	**69**	**1**	**2**	**11**	**14**	**503**
08:30	**25**	**197**	**3**	**225**	**14**	**62**	**35**	**111**	**72**	**10**	**5**	**87**	**1**	**5**	**11**	**17**	**440**
08:45	39	134	5	178	8	59	27	94	60	17	5	82	3	11	13	27	381
09:00	16	115	4	135	10	71	22	103	62	17	3	82	2	9	8	19	339
09:15	0	0	0	0	0	0	0	0	0	0	0	0	0	0	0	0	0
09:30	0	0	0	0	0	0	0	0	0	0	0	0	0	0	0	0	0
09:45	0	0	0	0	0	0	0	0	0	0	0	0	0	0	0	0	0
10:00	0	0	0	0	0	0	0	0	0	0	0	0	0	0	0	0	0
10:15	**0**	**0**	**0**	**0**	**0**	**0**	**0**	**0**	**0**	**0**	**0**	**0**	**0**	**0**	**0**	**0**	**0**
10:30	**0**	**0**	**0**	**0**	**0**	**0**	**0**	**0**	**0**	**0**	**0**	**0**	**0**	**0**	**0**	**0**	**0**
10:45	**0**	**0**	**0**	**0**	**0**	**0**	**0**	**0**	**0**	**0**	**0**	**0**	**0**	**0**	**0**	**0**	**0**
11:00	**0**	**0**	**0**	**0**	**0**	**0**	**0**	**0**	**0**	**0**	**0**	**0**	**0**	**0**	**0**	**0**	**0**
11:15	0	0	0	0	0	0	0	0	0	0	0	0	0	0	0	0	0
11:30	0	0	0	0	0	0	0	0	0	0	0	0	0	0	0	0	0
11:45	0	0	0	0	0	0	0	0	0	0	0	0	0	0	0	0	0
12:00	0	0	0	0	0	0	0	0	0	0	0	0	0	0	0	0	0
12:15	0	0	0	0	0	0	0	0	0	0	0	0	0	0	0	0	0
12:30	0	0	0	0	0	0	0	0	0	0	0	0	0	0	0	0	0
12:45	0	0	0	0	0	0	0	0	0	0	0	0	0	0	0	0	0
13:00	0	0	0	0	0	0	0	0	0	0	0	0	0	0	0	0	0
13:15	0	0	0	0	0	0	0	0	0	0	0	0	0	0	0	0	0
13:30	0	0	0	0	0	0	0	0	0	0	0	0	0	0	0	0	0
13:45	0	0	0	0	0	0	0	0	0	0	0	0	0	0	0	0	0
14:00	0	0	0	0	0	0	0	0	0	0	0	0	0	0	0	0	0
14:15	0	0	0	0	0	0	0	0	0	0	0	0	0	0	0	0	0
14:30	0	0	0	0	0	0	0	0	0	0	0	0	0	0	0	0	0
14:45	0	0	0	0	0	0	0	0	0	0	0	0	0	0	0	0	0
15:00	0	0	0	0	0	0	0	0	0	0	0	0	0	0	0	0	0
15:15	0	0	0	0	0	0	0	0	0	0	0	0	0	0	0	0	0
15:30	0	0	0	0	0	0	0	0	0	0	0	0	0	0	0	0	0
15:45	0	0	0	0	0	0	0	0	0	0	0	0	0	0	0	0	0
16:00	0	0	0	0	0	0	0	0	0	0	0	0	0	0	0	0	0
16:15	7	53	5	65	21	166	56	243	48	27	13	88	2	24	8	34	430
16:30	8	76	1	85	27	182	59	268	44	28	15	87	8	23	9	40	480
16:45	12	83	3	98	20	193	64	277	65	32	12	109	7	24	11	42	526
17:00	10	92	10	112	21	195	55	271	52	26	12	90	10	25	9	44	517
17:15	**20**	**96**	**6**	**122**	**11**	**206**	**43**	**260**	**68**	**27**	**22**	**117**	**7**	**28**	**22**	**57**	**556**
17:30	**13**	**100**	**7**	**120**	**19**	**237**	**66**	**322**	**45**	**23**	**19**	**87**	**8**	**15**	**14**	**37**	**566**
17:45	**20**	**110**	**5**	**135**	**18**	**198**	**43**	**259**	**43**	**33**	**9**	**85**	**6**	**26**	**9**	**41**	**520**
18:00	**12**	**76**	**4**	**92**	**22**	**231**	**63**	**316**	**61**	**34**	**15**	**110**	**8**	**21**	**5**	**34**	**552**
18:15	10	82	5	97	19	209	58	286	49	39	8	96	8	36	5	49	528
18:30	10	57	11	78	11	200	23	234	38	18	3	59	3	18	13	34	405
18:45				0				0				0				0	0
19:00				0				0				0				0	0
19:15				0				0				0				0	0
19:30				0				0				0				0	0
19:45				0				0				0				0	0
20:00				0				0				0				0	0
20:15				0				0				0				0	0
20:30				0				0				0				0	0
20:45				0				0				0				0	0
21:00				0				0				0				0	0
21:15				0				0				0				0	0
21:30				0				0				0				0	0
21:45				0				0				0				0	0
22:00				0				0				0				0	0
22:15				0				0				0				0	0
22:30				0				0				0				0	0
22:45				0				0				0				0	0
23:00				0				0				0				0	0
23:15				0				0				0				0	0
23:30				0				0				0				0	0
23:45				0				0				0				0	0
00:00				0				0				0				0	0
TOTAL	**346**	**2752**	**123**	**3221**	**273**	**2584**	**797**	**3654**	**1128**	**425**	**179**	**1732**	**83**	**319**	**223**	**625**	**9232**
AM Peak Vol	98	872	32	1002	38	249	132	419	244	48	17	309	5	26	42	73	1803
PM Peak Vol	65	382	22	469	70	872	215	1157	217	117	65	399	29	90	50	169	2194

PEDESTRIAN SCHOOL CHILDREN & U-TURN BREAKDOWN

Hour	Montgomery Village Avenue			Montgomery Village Avenue			Centerway Road			Shopping Ctr.		
Ending	S.C.	PED.	U.T.	S.C.	PED.	U.T.	S.C.	PED.	U.T.	S.C.	PED.	U.T.
04:00												
04:15												
04:30												
04:45												
05:00												
05:15												
05:30												
05:45												
06:00												
06:15												
06:30												
06:45		0			0			0			0	
07:00		0			4			0			0	
07:15		2			3			0			4	
07:30		1			1			1			0	
07:45		**1**			**1**			**0**			**1**	
08:00		**1**			**7**			**1**			**3**	
08:15		**0**			**2**			**2**			**0**	
08:30		**3**			**1**			**3**			**1**	
08:45		1			5			4			1	
09:00		1			2			0			0	
09:15		0			0			0			0	
09:30		0			0			0			0	
09:45		0			0			0			0	
10:00		0			0			0			0	
10:15		**0**			**0**			**0**			**0**	
10:30		**0**			**0**			**0**			**0**	
10:45		**0**			**0**			**0**			**0**	
11:00		**0**			**0**			**0**			**0**	
11:15		0			0			0			0	
11:30		0			0			0			0	
11:45		0			0			0			0	
12:00		0			0			0			0	
12:15		0			0			0			0	
12:30		0			0			0			0	
12:45		0			0			0			0	
13:00		0			0			0			0	
13:15		0			0			0			0	
13:30		0			0			0			0	
13:45		0			0			0			0	
14:00		0			0			0			0	
14:15		0			0			0			0	
14:30		0			0			0			0	
14:45		0			0			0			0	
15:00		0			0			0			0	
15:15		0			0			0			0	
15:30		0			0			0			0	
15:45		0			0			0			0	
16:00		0			0			0			0	
16:15		2			1			2			0	
16:30		0			0			0			1	
16:45		1			1			2			1	
17:00		0			4			2			1	
17:15		**2**			**0**			**1**			**3**	
17:30		**1**			**1**			**1**			**3**	
17:45		**2**			**1**			**0**			**5**	
18:00		**3**			**1**			**0**			**1**	
18:15		7			2			1			1	
18:30		6			0			0			1	
18:45												
19:00												
19:15												
19:30												
19:45												
20:00												
20:15												
20:30												
20:45												
21:00												
21:15												
21:30												
21:45												
22:00												
22:15												
22:30												
22:45												
23:00												
23:15												
23:30												
23:45												
00:00												
TOTAL	**0**	**34**	**0**	**0**	**37**	**0**	**0**	**20**	**0**	**0**	**27**	**0**
AM Peak Vol	0	5	0	0	11	0	0	6	0	0	5	0
PM Peak Vol	0	8	0	0	3	0	0	2	0	0	12	0

Count Summary :

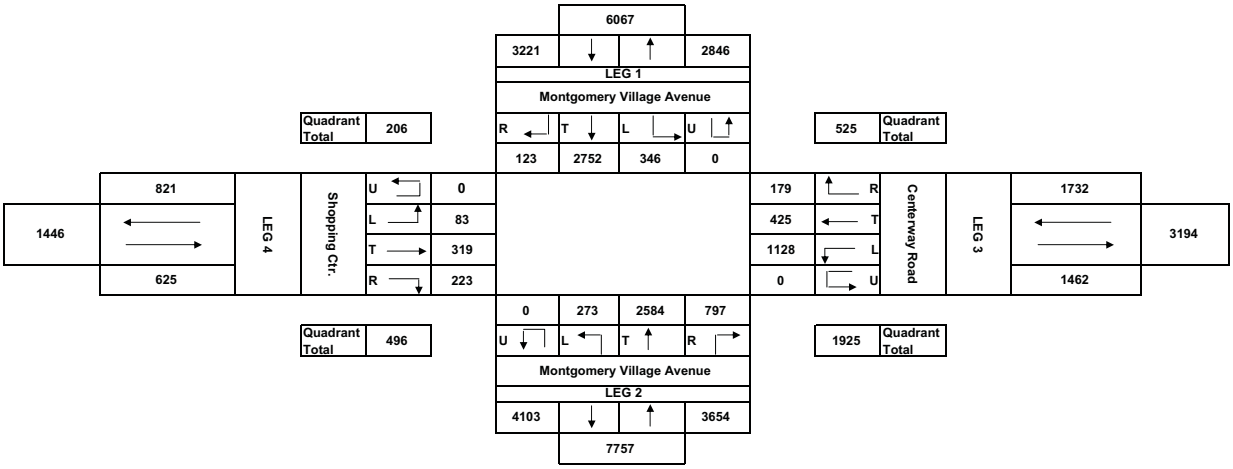

Comments :

AM Peak Hour :

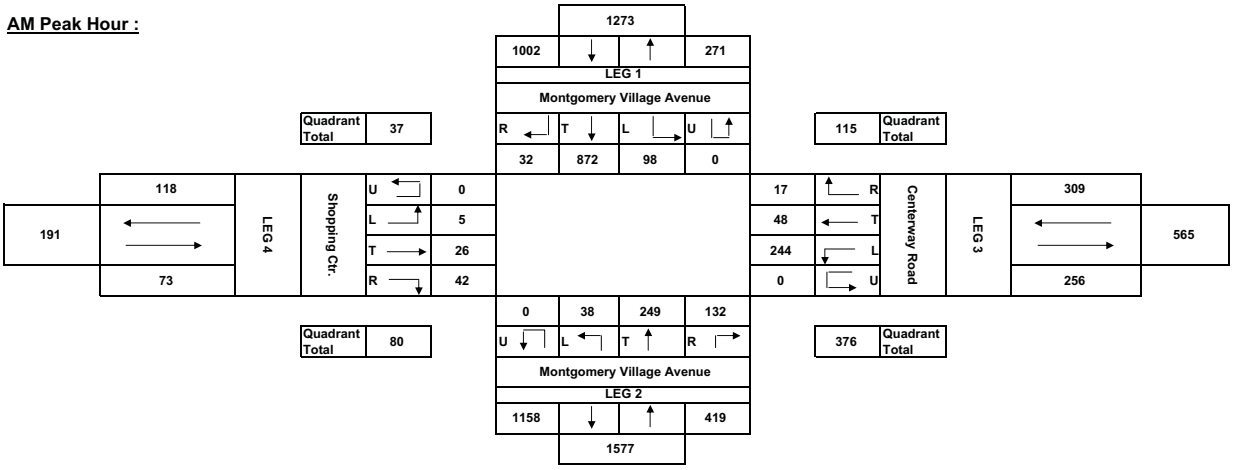

PM Peak Hour :

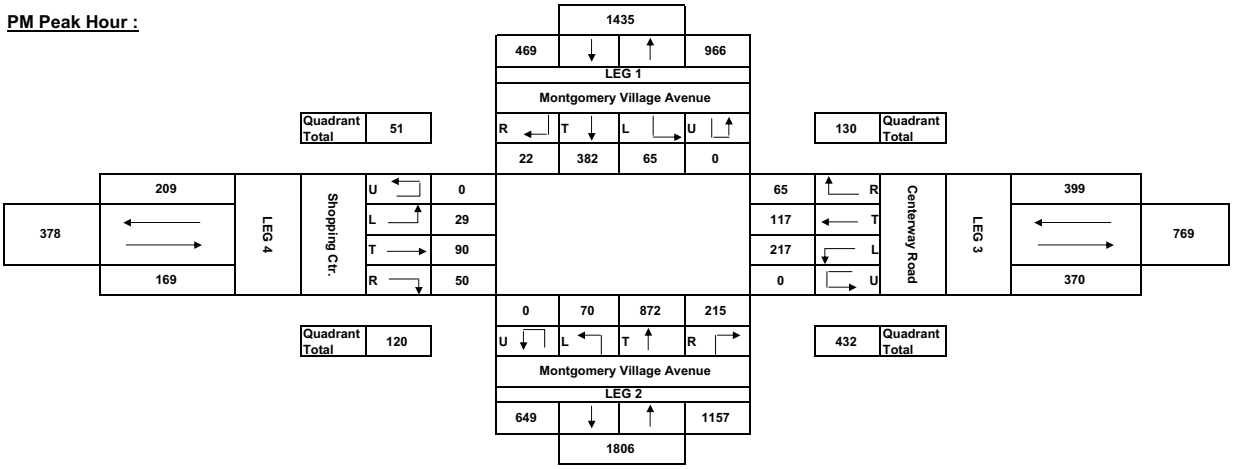

APPENDIX

B

Existing Traffic Signal Timing Information

Data Report for Signal 364

11/3/2009

Signal Number	Name	Pri Group	Ch.	RU	Auto Cyc.	Auto Coord Low	Auto Coord High	Low Thres (sec)	High Thres (sec)
364	WOODFIELD-MUNCASTER-SNOUFFER	5	26	0	10	False	False	0	255

Computer Phases

Number	Name	Guar Green	Clear	Yellow	Red	Walk	Dont Walk	Min Green	Max Green
1	Wb Muncaster Mill Rd. (Md.115) -Eb Snouffer School Rd.	10	5	4	1	8	12	10	99
2	Nb Woodfield Rd (Md.124)	30	5	4	1	8	10	6	99
3	Sb Woodfield Rd (Md.124)	18	5	4	1	8	10	6	99
4	Eblt Snouffer School Rd.-Wblt Muncaster Mill Rd.	4	4	4	0	0	0	4	30

Timing Profile

Offset	Split Num.	Index	1 %	2 %	3 %	4 %	5 %
83	1	1	22 /	39 /	26 /	13 /	
83	2	1	22 /	39 /	26 /	13 /	
83	3	1	22 /	39 /	26 /	13 /	
83	4	1	22 /	39 /	26 /	13 /	
75	5	5	20 /	38 /	26 /	16 /	
75	6	6	20 /	38 /	26 /	16 /	
75	7	7	20 /	38 /	26 /	16 /	
0	8	8	31 /	37 /	20 /	12 /	
4	9	9	20 /	30 /	38 /	12 /	
99	10	10	28 /	35 /	25 /	12 /	
3	11	11	30 /	34 /	24 /	12 /	
3	12	12	22 /	29 /	38 /	11 /	
79	13	13	30 /	30 /	29 /	11 /	
94	14	14	27 /	28 /	35 /	10 /	
2	15	12	22 /	29 /	38 /	11 /	
93	16	16	26 /	36 /	26 /	12 /	

Computer Splits

Number	P1%	P2%	P3%	P4%	P5%
1	22	39	26	13	
2	31	26	29	14	
3	25	25	25	25	
4	25	25	25	25	
5	20	38	26	16	
6	20	38	26	16	
7	20	38	26	16	
8	31	37	20	12	
9	20	30	38	12	
10	28	35	25	12	
11	30	34	24	12	
12	22	29	38	11	
13	30	30	29	11	
14	27	28	35	10	
15	20	35	35	10	
16	26	36	26	12	

Comtrac Splits to Green time (Seconds)- 4 Computer Phase Signal

Location: Snouffer School Road at MD 124 (Woodfield Road)
Int #: 364
Date: 10/1/2009

Comp Phase

1	WB Muncaster Mill Rd. & EB Snouffer School Rd.
2	NB Woodfield Rd.
3	SB Woodfield Rd.
4	EB LT Snouffer School Rd. & WB LT Muncaster Mill Rd.

AM

Group	Cycle Length	Comp Phase 1 DW
5	120	12

Computer Phase	%	Clearance (Y+R)	Green (seconds)
1	20	5	31
2	30	5	19
3	38	5	40.6
4	12	4	10.4
Total	100	19	101
		Calc'd Cycle Length=	120
		Should equal=	120

PM

Group	Cycle Length	Comp Phase 1 DW
5	120	12

Computer Phase	%	Clearance (Y+R)	Green (seconds)
1	28	5	40.6
2	35	5	25
3	25	5	25
4	12	4	10.4
Total	100	19	101
		Calc'd Cycle Length=	120
		Should equal=	120

Green Font - Data you enter

Data Report for Signal 649

10/1/2009

Signal Number	Name	Pri Group	Ch.	RU	Auto Cyc.	Auto Coord Low	Auto Coord High	Low Thres (sec)	High Thres (sec)
649	CHERRY-LAUREL,MOONEY,SNOUFERS	5	26	6	10	False	False	0	255

Computer Phases

Number	Name	Guar Green	Clear	Yellow	Red	Walk	Dont Walk	Min Green	Max Green
1	Eb-Wb Snouffer School Rd.	10	5	4	1	7	10	10	60
2	Nb Cherry Laurel Dr.-Sb Mooney Dr.	27	5	4	1	7	10	5	40
3	Eblt Snouffer School Rd.	4	5	4	1	0	0	4	30

Timing Profile

Offset	Split Num.	Index	1 %	2 %	3 %	4 %	5 %
41	1	1	51	36	13		
41	2	1	51	36	13		
41	3	1	51	36	13		
41	4	1	51	36	13		
15	5	5	55	34	11		
15	6	6	57	32	11		
15	7	7	57	32	11		
10	8	8	60	29	11		
70	9	9	52	37	11		
31	10	10	62	27	11		
53	11	11	69	21	10		
53	12	12	69	21	10		
53	13	13	69	21	10		
50	14	14	74	18	8		
50	15	15	74	18	8		
50	16	16	74	18	8		

Computer Splits

Number	P1%	P2%	P3%	P4%	P5%
1	51	36	13		
2	51	36	13		
3	51	36	13		
4	51	36	13		
5	55	34	11		
6	57	32	11		
7	57	32	11		
8	60	29	11		
9	52	37	11		
10	62	27	11		
11	69	21	10		
12	69	21	10		
13	69	21	10		
14	74	18	8		
15	74	18	8		
16	74	18	8		

Comtrac Splits to Green time (Seconds)- 3 Computer Phase Signal

Location: Snouffer School Road at Mooney Drive
Int #: 649
Date: 10/1/2009

Comp Phase

1	EB & WB Snouffer School Rd
2	NB Cherry Laurel Dr. & SB Mooney Dr.
3	EB LT Snouffer School Rd.

AM

Group	Cycle Length	Comp Phase 1 DW
5	120	10

Computer Phase	%	Clearance (Y+R)	Green (seconds)
1	52	5	67.4
2	37	5	29.4
3	11	5	8.2
Total	100	15	105
		Calc'd Cycle Length=	120
		Should equal=	120

PM

Group	Cycle Length	Comp Phase 1 DW
5	120	10

Computer Phase	%	Clearance (Y+R)	Green (seconds)
1	62	5	79.4
2	27	5	17.4
3	11	5	8.2
Total	100	15	105
		Calc'd Cycle Length=	120
		Should equal=	120

Green Font - Data you enter

Data Report for Signal 756

10/1/2009

Signal Number	Name	Pri Group	Ch.	RU	Auto Cyc.	Auto Coord Low	Auto Coord High	Low Thres (sec)	High Thres (sec)
756	SNOUFFER.SCL-LEWISBERRY	52	68	7	0	False	False	0	255

Computer Phases

Number	Name	Guar Green	Clear	Yellow	Red	Walk	Dont Walk	Min Green	Max Green
1	NB-SB SNOUFFER SCHOOL	7	5	4	1	7	7	7	50
2	EB CHESLEY-WB LEWISBERRY	21	5	4	1	7	10	5	40

Timing Profile

Offset	Split Num.	Index	1 %	2 %	3 %	4 %	5 %
98	1	1	47 /	53 /	/	/	
98	2	1	47 /	53 /	/	/	
98	3	1	47 /	53 /	/	/	
98	4	1	47 /	53 /	/	/	
15	5	5	71 /	29 /	/	/	
15	6	6	71 /	29 /	/	/	
15	7	7	71 /	29 /	/	/	
15	8	8	70 /	30 /	/	/	
83	9	9	67 /	33 /	/	/	
36	10	10	75 /	25 /	/	/	
46	11	11	75 /	25 /	/	/	
86	12	12	70 /	30 /	/	/	
53	13	13	77 /	23 /	/	/	
46	14	14	80 /	20 /	/	/	
49	15	15	76 /	24 /	/	/	
34	16	16	84 /	16 /	/	/	

Computer Splits

Number	P1%	P2%	P3%	P4%	P5%
1	47	53			
2	47	53			
3	47	53			
4	47	53			
5	71	29			
6	71	29			
7	71	29			
8	70	30			
9	67	33			
10	75	25			
11	75	25			
12	70	30			
13	77	23			
14	80	20			
15	76	24			
16	84	16			

Comtrac Splits to Green time (Seconds)- 2 Computer Phase Signal

Location: Snouffer School Road at Lewisberry Drive
Int #: 756
Date: 10/1/2009

Comp Phase

1	NB & SB Snouffer School Rd.
2	EB Chesley Knoll Dr. & WB Lewisberry Dr.

AM

Group	Cycle Length	Comp Phase 1 DW
52	120	7

Computer Phase	%	Clearance (Y+R)	Green (seconds)
1	67	5	82.4
2	33	5	27.6
Total	100	10	110
		Calc'd Cycle Length=	120
		Should equal=	120

PM

Group	Cycle Length	Comp Phase 1 DW
52	120	7

Computer Phase	%	Clearance (Y+R)	Green (seconds)
1	75	5	92
2	25	5	18
Total	100	10	110
		Calc'd Cycle Length=	120
		Should equal=	120

Green Font - Data you enter

Data Report for Signal 424

10/1/2009

Signal Number	Name	Pri Group	Ch.	RU	Auto Cyc.	Auto Coord Low	Auto Coord High	Low Thres (sec)	High Thres (sec)
424	GOSHEN-SNOUFFERS.SCH. -WIGHTMAN	5	68	1	10	False	False	0	255

Computer Phases

Number	Name	Guar Green	Clear	Yellow	Red	Walk	Dont Walk	Min Green	Max Green
1	SB-NB Goshen Rd.	7	6	4	2	7	9	7	60
2	EBLT Wightman Rd.-WBLT Snouffer School Rd.	12	4	3	1	0	0	3	30
3	EB Wightman Rd.-WB Snouffer School Rd.	23	5	3	2	7	16	5	50
4	SBLT Goshen Rd.	3	4	3	1		0	3	40

Timing Profile

Offset	Split Num.	Index	1 %	2 %	3 %	4 %	5 %
0	1	1	23 /	29 /	32 /	16 /	
0	2	1	23 /	29 /	32 /	16 /	
0	3	1	23 /	29 /	32 /	16 /	
0	4	1	23 /	29 /	32 /	16 /	
0	5	1	23 /	29 /	32 /	16 /	
0	6	6	32 /	26 /	28 /	14 /	
0	7	7	32 /	26 /	28 /	14 /	
0	8	8	25 /	23 /	38 /	14 /	
0	9	9	24 /	23 /	39 /	14 /	
0	10	10	28 /	29 /	30 /	13 /	
0	11	11	48 /	19 /	22 /	11 /	
0	12	12	23 /	25 /	39 /	13 /	
0	13	13	30 /	28 /	29 /	13 /	
0	14	14	34 /	20 /	33 /	13 /	
0	15	15	51 /	17 /	19 /	13 /	
0	16	16	54 /	16 /	19 /	11 /	

Computer Splits

Number	P1%	P2%	P3%	P4%	P5%
1	23	29	32	16	
2	23	29	32	16	
3	23	29	32	16	
4	23	29	32	16	
5	32	26	28	14	
6	32	26	28	14	
7	32	26	28	14	
8	25	23	38	14	
9	24	23	39	14	
10	28	29	30	13	
11	48	19	22	11	
12	23	25	39	13	
13	30	28	29	13	
14	34	20	33	13	
15	51	17	19	13	
16	54	16	19	11	

Comtrac Splits to Green time (Seconds)- 4 Computer Phase Signal

Location: Snouffer School Road at Goshen Road
Int #: 424
Date: 10/1/2009

Comp Phase

1	NB & SB Goshen Rd.
2	EB LT Wightman Rd. & WB LT Snouffer School Rd.
3	EB Wightman Rd. & WB Snouffer School Rd.
4	SB LT Goshen Rd.

AM

Group	Cycle Length	Comp Phase 1 DW
5	120	9

Computer Phase	%	Clearance (Y+R)	Green (seconds)
1	24	6	31.8
2	23	4	14.6
3	39	5	41.8
4	14	4	12.8
Total	100	19	101
		Calc'd Cycle Length=	120
		Should equal=	120

PM

Group	Cycle Length	Comp Phase 1 DW
5	120	9

Computer Phase	%	Clearance (Y+R)	Green (seconds)
1	28	6	36.6
2	29	4	21.8
3	30	5	31
4	13	4	11.6
Total	100	19	101
		Calc'd Cycle Length=	120
		Should equal=	120

Green Font - Data you enter

Data Report for Signal 386

10/1/2009

Signal Number	Name	Pri Group	Ch.	RU	Auto Cyc.	Auto Coord Low	Auto Coord High	Low Thres (sec)	High Thres (sec)
386	GOSHEN-CENTERWAY	22	22	7	10	False	False	0	255

Computer Phases

Number	Name	Guar Green	Clear	Yellow	Red	Walk	Dont Walk	Min Green	Max Green
1	Sb-Nb Goshen Rd.	10	5	4	1	7	23	10	60
2	Wb-Eb Centerway Rd.	42	5	4	1	7	12	5	50
3	Nblt Goshen Rd.	3	5	4	1	0	0	3	40

Timing Profile

Offset	Split Num.	Index	1 %	2 %	3 %	4 %	5 %
84	1	1	38	45	17		
68	2	1	38	45	17		
79	3	1	38	45	17		
65	4	1	38	45	17		
60	5	5	28	55	17		
68	6	6	38	45	17		
70	7	7	38	45	17		
84	8	8	30	53	17		
63	9	9	38	47	15		
99	10	10	17	58	25		
80	11	11	36	47	17		
83	12	12	60	25	15		
84	13	13	35	40	25		
68	14	14	52	33	15		
79	15	15	50	35	15		
86	16	16	20	57	23		

Computer Splits

Number	P1%	P2%	P3%	P4%	P5%
1	38	45	17		
2	34	33	33		
3	34	33	33		
4	34	33	33		
5	28	55	17		
6	38	45	17		
7	38	45	17		
8	30	53	17		
9	38	47	15		
10	17	58	25		
11	36	47	17		
12	60	25	15		
13	35	40	25		
14	52	33	15		
15	50	35	15		
16	20	57	23		

Comtrac Splits to Green time (Seconds)- 3 Computer Phase Signal

Location: Centerway Road at Goshen Road
Int #: 386
Date: 10/1/2009

Comp Phase

1	NB & SB Goshen Rd.
2	EB & WB Centerway Rd.
3	NB LT Goshen Rd.

AM

Group	Cycle Length	Comp Phase 1 DW
22	100	23

Computer Phase	%	Clearance (Y+R)	Green (seconds)
1	38	5	56
2	47	5	19
3	15	5	10
Total	100	15	85
		Calc'd Cycle Length=	100
		Should equal=	100

PM

Group	Cycle Length	Comp Phase 1 DW
22	100	23

Computer Phase	%	Clearance (Y+R)	Green (seconds)
1	17	5	35
2	58	5	30
3	25	5	20
Total	100	15	85
		Calc'd Cycle Length=	100
		Should equal=	100

Green Font - Data you enter

Data Report for Signal 384

10/1/2009

Signal Number	Name	Pri Group	Ch.	RU	Auto Cyc.	Auto Coord Low	Auto Coord High	Low Thres (sec)	High Thres (sec)
384	M.V.A.-CENTERWAY	5	2	3	10	False	False	0	255

Computer Phases

Number	Name	Guar Green	Clear	Yellow	Red	Walk	Dont Walk	Min Green	Max Green
1	Sb Montgomery Village Ave. Md.124-Nb Montgoermy Village Ave. Md.124	7	7	4	3	7	18	10	60
2	Eb Centerway Dr.-Centerway Ped	47	7	4	3	7	23	3	40
3	Wb Centerway Dr.	3	7	4	3	0	0	3	40

Timing Profile

Offset	Split Num.	Index	1 %	2 %	3 %	4 %	5 %
23	1	1	20	59	21		
95	2	1	20	59	21		
95	3	1	20	59	21		
95	4	1	20	59	21		
95	5	5	26	54	20		
95	6	6	26	54	20		
95	7	7	26	54	20		
95	8	8	37	45	18		
68	9	9	33	45	22		
63	10	10	37	45	18		
95	11	11	44	36	20		
68	12	12	46	36	18		
63	13	13	48	36	16		
95	14	14	46	36	18		
68	15	15	55	30	15		
83	16	16	57	30	13		

Computer Splits

Number	P1%	P2%	P3%	P4%	P5%
1	20	59	21		
2	20	59	21		
3	20	59	21		
4	20	59	21		
5	26	54	20		
6	26	54	20		
7	26	54	20		
8	37	45	18		
9	33	45	22		
10	37	45	18		
11	44	36	20		
12	46	36	18		
13	48	36	16		
14	46	36	18		
15	55	30	15		
16	57	30	13		

Comtrac Splits to Green time (Seconds)- 3 Computer Phase Signal

Location: Centerway Road at Montgomery Village Avenue
Int #: 384
Date: 10/1/2009

Comp Phase

1	NB & SB Montgomery Village Ave.
2	EB Centerway Rd.
3	WB Centerway Rd.

AM

Group	Cycle Length	Comp Phase 1 DW
5	120	18

Computer Phase	%	Clearance (Y+R)	Green (seconds)
1	33	7	50.6
2	45	7	29
3	22	7	19.4
Total	100	21	99
		Calc'd Cycle Length=	120
		Should equal=	120

PM

Group	Cycle Length	Comp Phase 1 DW
5	120	18

Computer Phase	%	Clearance (Y+R)	Green (seconds)
1	37	7	55.4
2	45	7	29
3	18	7	14.6
Total	100	21	99
		Calc'd Cycle Length=	120
		Should equal=	120

Green Font - Data you enter

Data Report for Signal 733

10/1/2009

Signal Number	Name	Pri Group	Ch.	RU	Auto Cyc.	Auto Coord Low	Auto Coord High	Low Thres (sec)	High Thres (sec)
733	*CENTERWAY-SNOUFER.SCHOOL	100	26	5	100	False	False	0	255

Computer Phases

Number	Name	Guar Green	Clear	Yellow	Red	Walk	Dont Walk	Min Green	Max Green
1	Sb-Nb Snouffers School Rd.	14	5	4	1	7	7	7	60
2	Eb Centerway Rd.-Wb Driveway	21	5	4	1	7	7	5	40
3	Nblt Snouffers School Rd.	3	4	3	1	0	0	3	40

Timing Profile

Offset	Split Num.	Index	1 %	2 %	3 %	4 %	5 %
0	1	1	55	29	16		
0	2	1	55	29	16		
0	3	1	55	29	16		
0	4	1	55	29	16		
0	5	5	45	35	20		
0	6	6	39	48	13		
0	7	7	56	26	18		
0	8	8	42	43	15		
0	9	9	55	35	10		
0	10	10	52	23	25		
0	11	11	72	17	11		
0	12	12	72	17	11		
0	13	13	64	17	19		
0	14	14	76	15	9		
0	15	15	77	15	8		
0	16	16	69	15	16		

Computer Splits

Number	P1%	P2%	P3%	P4%	P5%
1	55	29	16		
2	55	29	16		
3	55	29	16		
4	55	29	16		
5	45	35	20		
6	39	48	13		
7	56	26	18		
8	42	43	15		
9	55	35	10		
10	52	23	25		
11	72	17	11		
12	72	17	11		
13	64	17	19		
14	76	15	9		
15	77	15	8		
16	69	15	16		

Comtrac Splits to Green time (Seconds)- 3 Computer Phase Signal

Location: Snouffer School Road at Centerway Road
Int #: 733
Date: 10/1/2009

Comp Phase

1	NB & SB Snouffer School Rd.
2	EB Centerway Rd.
3	NB LT Snouffer School Rd.

AM

Group	Cycle Length	Comp Phase 1 DW
100	100	7

Computer Phase	%	Clearance (Y+R)	Green (seconds)
1	55	5	57
2	29	5	17
3	16	5	11
Total	100	15	85
		Calc'd Cycle Length=	100
		Should equal=	100

PM

Group	Cycle Length	Comp Phase 1 DW
100	100	7

Computer Phase	%	Clearance (Y+R)	Green (seconds)
1	55	5	57
2	29	5	17
3	16	5	11
Total	100	15	85
		Calc'd Cycle Length=	100
		Should equal=	100

Green Font - Data you enter

APPENDIX

C

Existing CLV Analysis Worksheets
Existing Synchro/SimTraffic Analysis Worksheets

Critical Lane Volume Methodology
Turning Movement Summary and Level of Service

Prepared by: **STV Inc.**

Count Date: 3/31/2009
Conditions: Existing
Design Year:

Location: Snouffer School Road at MD 124 (Woodfield Road)
Computed by: MMO
Date 11/17/2009

Morning Peak Hour: 7:30-8:30 AM

Evening Peak Hour: 4:45-5:45 PM

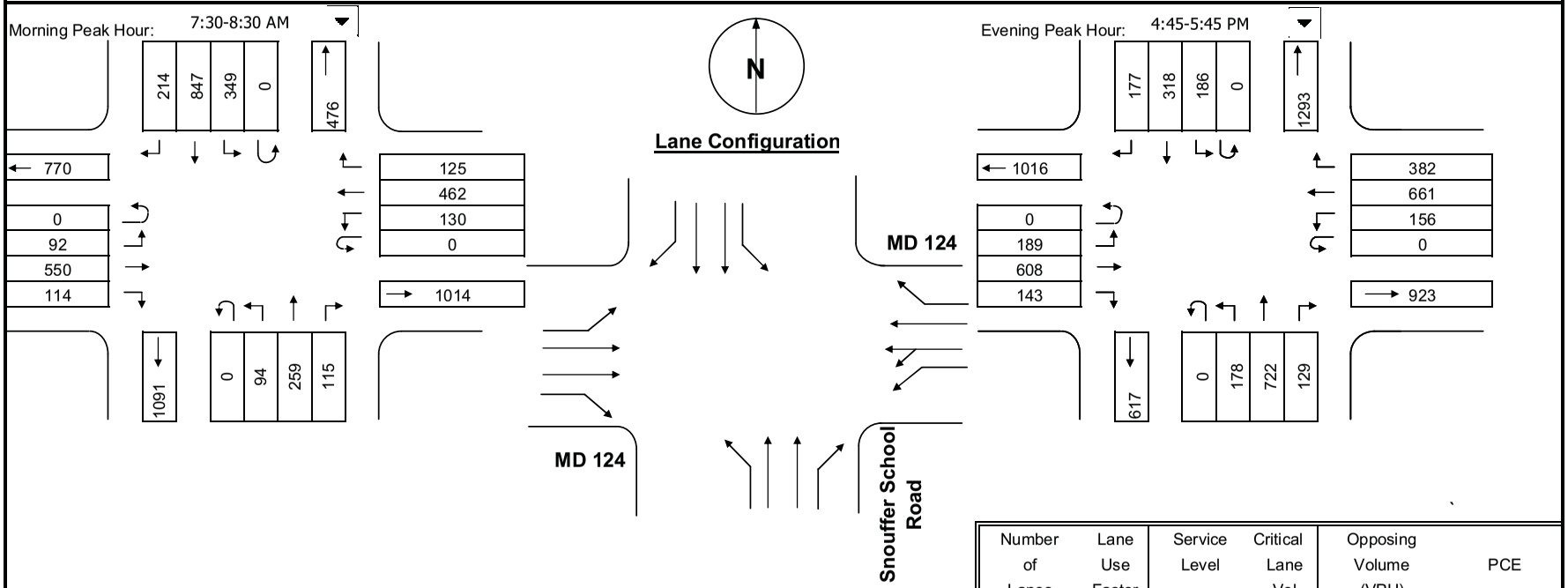

Number of Lanes	Lane Use Factor	Service Level	Critical Lane Vol	Opposing Volume (VPH)	PCE
1 = 1.00		A <= 1000		<= 199	1.1
2 = 0.53		B <= 1150		<= 599	2.0
3 = 0.37		C <= 1300		<= 799	3.0
4 = 0.30		D <= 1450		<= 999	4.0
5 = 0.25		E <= 1600		> 1000	5.0
		F > 1600			

Phasing

RTOR/Overlap
- ☐ Northbound
- ☐ Southbound
- ☐ Eastbound
- ☐ Westbound

Split Phasing
- ◉ East/West
- ○ North/South
- ○ None

Inx. Control
- ◉ Signal
- ○ Stop

Phase	Movement	Volume 1	Lane Use Factor - 2	Lane volume 1 X 2	Opposing Movement	Critical In. volume	*
	NB	259	0.53	137	349	486	
	SB	847	0.53	449	94	543	*
	EB	550	0.53	292	0	292	*
	WB	592	0.40	237	0	237	*
Remarks:			* Critical volume		Total	**1071**	
						0.67	**B**

Phase	Movement	Volume 1	Lane Use Factor - 2	Lane volume 1 X 2	Opposing Movement	Critical In. Volume	*
	NB	722	0.53	383	186	569	*
	SB	318	0.53	169	178	347	
	EB	608	0.53	322	0	322	*
	WB	817	0.40	327	0	327	*
Remarks:			* Critical volume		Total	**1218**	
						0.76	**C**

Critical Lane Volume Methodology
Turning Movement Summary and Level of Service

Prepared by: **STV Inc.**

Count Date: 10/1/2009
Conditions: Existing
Design Year:

Location: Snouffer School Road at Mooney Drive
Computed by: MMO
Date 11/17/2009

Morning Peak Hour: 7:15-8:15 AM

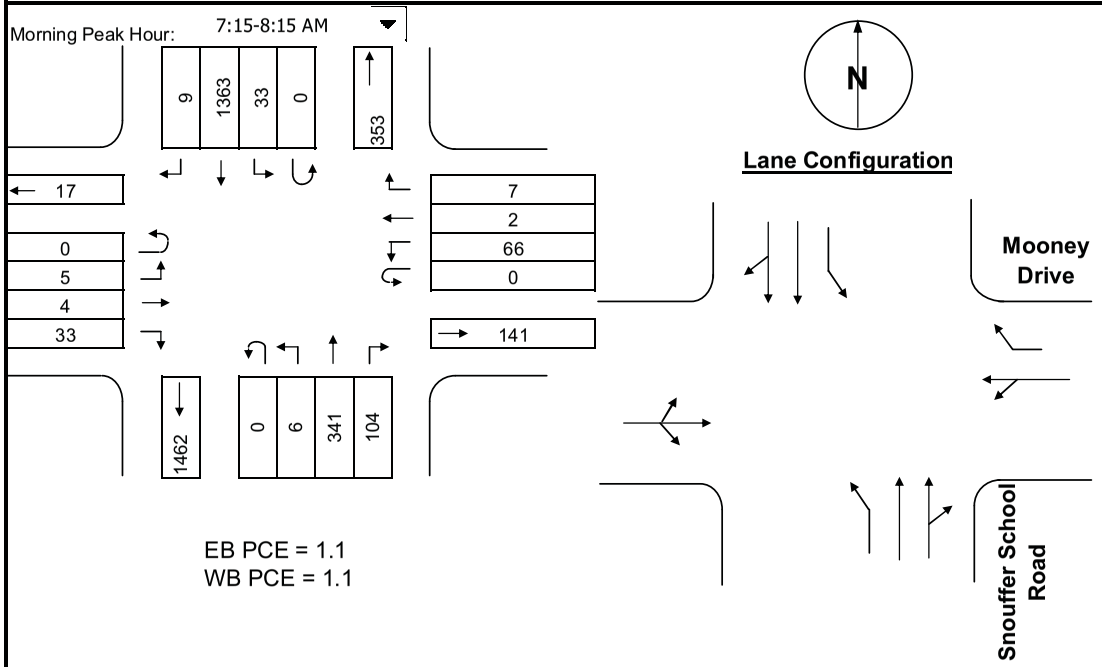

EB PCE = 1.1
WB PCE = 1.1

Evening Peak Hour: 4:45-5:45 PM

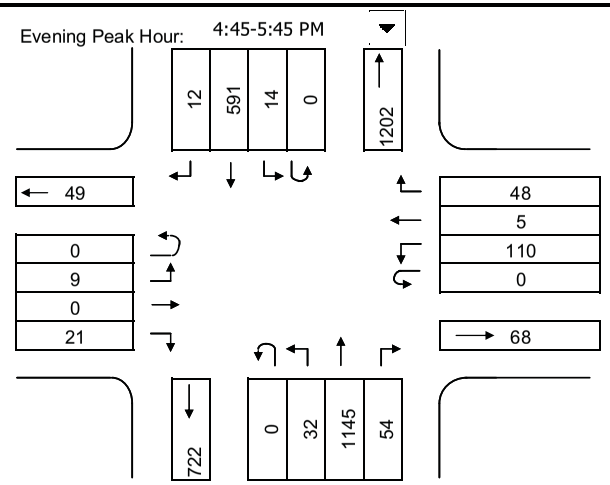

EB PCE = 1.1
WB PCE = 1.1

Number of Lanes	Lane Use Factor	Service Level	Critical Lane Vol	Opposing Volume (VPH)	PCE
1 = 1.00		A <= 1000		<= 199	1.1
2 = 0.53		B <= 1150		<= 599	2.0
3 = 0.37		C <= 1300		<= 799	3.0
4 = 0.30		D <= 1450		<= 999	4.0
5 = 0.25		E <= 1600		> 1000	5.0
		F > 1600			

Phasing

RTOR/Overlap
- ☐ Northbound
- ☐ Southbound
- ☐ Eastbound
- ☐ Westbound

Split Phasing
- ○ East/West
- ○ North/South
- ◉ None

Inx. Control
- ◉ Signal
- ○ Stop

Phase	Movement	Volume 1	Lane Use Factor - 2	Lane volume 1 X 2	Opposing Movement	Critical In. volume	*	Phase	Movement	Volume 1	Lane Use Factor - 2	Lane volume 1 X 2	Opposing Movement	Critical In. Volume	*
	NB	445	0.53	236	33	269			NB	1199	0.53	635	14	649	*
	SB	1372	0.53	727	6	733	*		SB	603	0.53	320	32	352	
	EB	43	1.00	43	66	109	*		EB	31	1.00	31	110	141	*
	WB	75	1.00	75	5	80			WB	126	1.00	126	9	135	
Remarks:			* Critical volume		Total	**842**		Remarks:			* Critical volume		Total	**790**	
						0.53	**A**							**0.49**	**A**

Critical Lane Volume Methodology
Turning Movement Summary and Level of Service

Prepared by: **STV Inc.**

Count Date: 2/26/2009
Conditions: Existing
Design Year:

Location: Snouffer School Road at Centerway Road
Computed by: MMO
Date 11/17/2009

Morning Peak Hour: 7:00-8:00 AM

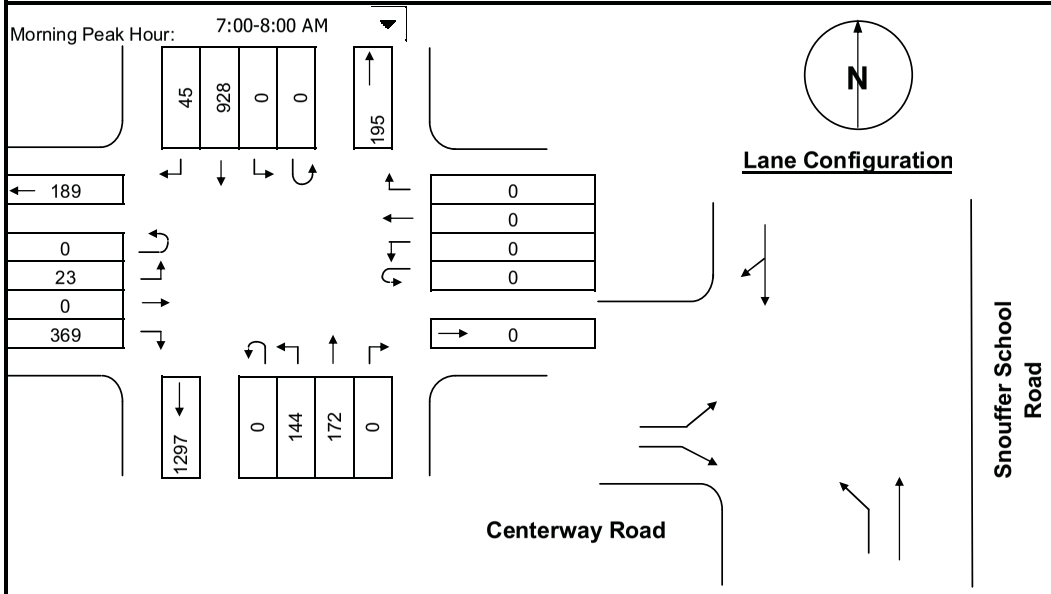

Evening Peak Hour: 5:00-6:00 PM

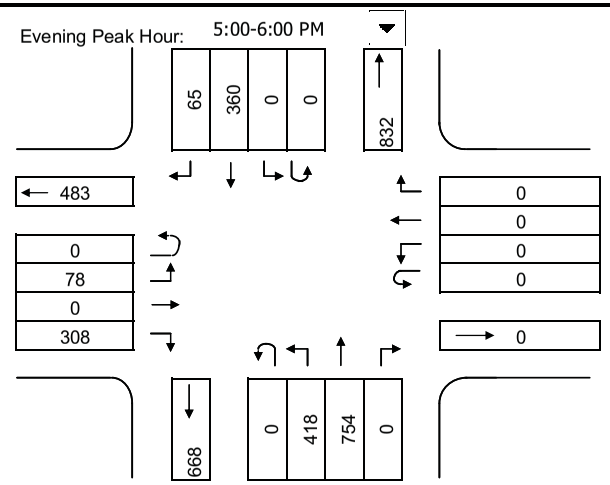

Number of Lanes	Lane Use Factor	Service Level	Critical Lane Vol	Opposing Volume (VPH)	PCE
1 =	1.00	A	<= 1000	<= 199	1.1
2 =	0.53	B	<= 1150	<= 599	2.0
3 =	0.37	C	<= 1300	<= 799	3.0
4 =	0.30	D	<= 1450	<= 999	4.0
5 =	0.25	E	<= 1600	> 1000	5.0
		F	> 1600		

Phasing

RTOR/Overlap
- ☐ Northbound
- ☐ Southbound
- ☑ Eastbound
- ☐ Westbound

Split Phasing
- ○ East/West
- ○ North/South
- ◉ None

Inx. Control
- ◉ Signal
- ○ Stop

Phase	Movement	Volume 1	Lane Use Factor - 2	Lane volume 1 X 2	Opposing Movement	Critical In. volume	*	Phase	Movement	Volume 1	Lane Use Factor - 2	Lane volume 1 X 2	Opposing Movement	Critical In. Volume	*
	NB	172	1.00	172	0	172			NB	754	1.00	754	0	754	
	SB	973	1.00	973	144	1117	*		SB	425	1.00	425	418	843	*
	EB	225	1.00	225	0	225	*		EB	78	1.00	78	0	78	*
Remarks:			* Critical volume		Total	**1342**		Remarks:			* Critical volume		Total	**921**	
EB = EBR (369) - WBL (144)						**0.84**	**D**							**0.58**	**A**

Critical Lane Volume Methodology
Turning Movement Summary and Level of Service

Prepared by: **STV Inc.**

Count Date: 10/6/2009
Conditions: Existing
Design Year:

Location: Snouffer School Road at Alliston Hollow Way
Computed by: MMO
Date 11/17/2009

Morning Peak Hour: 6:45-7:45 AM

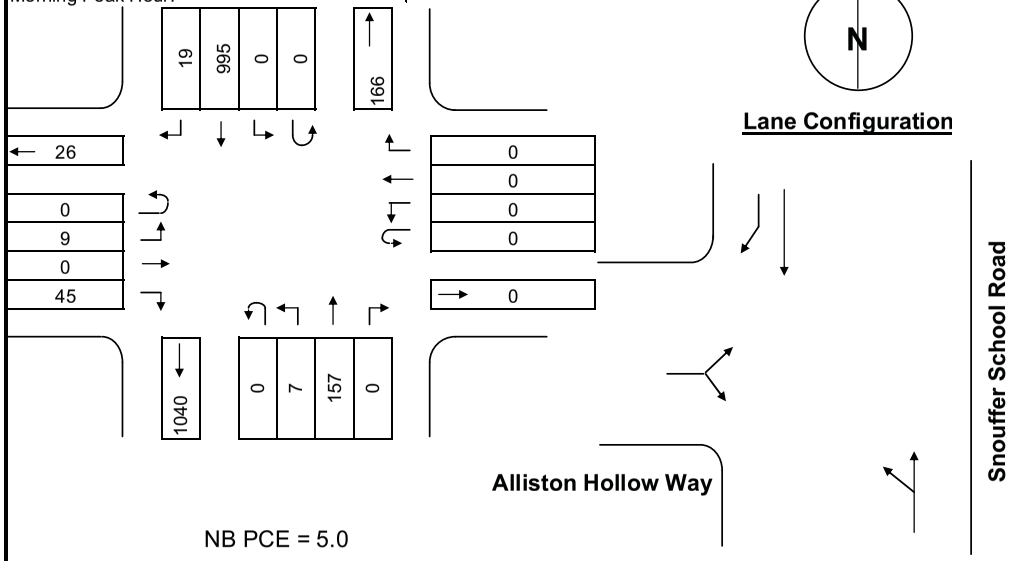

NB PCE = 5.0

Evening Peak Hour: 5:00-6:00 PM

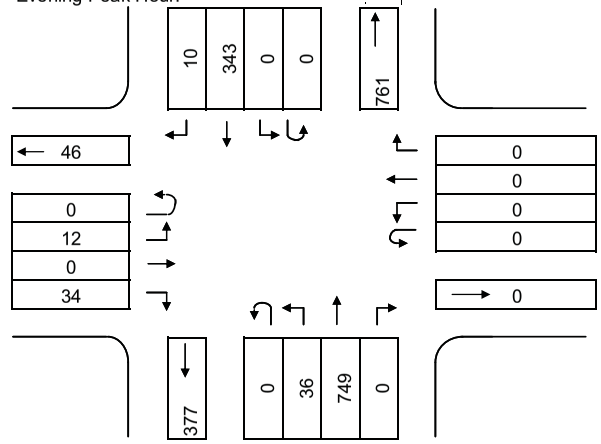

NB PCE = 2.0

Number of Lanes	Lane Use Factor	Service Level	Critical Lane Vol	Opposing Volume (VPH)	PCE
1 = 1.00		A <= 1000		<= 199	1.1
2 = 0.53		B <= 1150		<= 599	2.0
3 = 0.37		C <= 1300		<= 799	3.0
4 = 0.30		D <= 1450		<= 999	4.0
5 = 0.25		E <= 1600		> 1000	5.0
		F > 1600			

Phasing

RTOR/Overlap
- ☐ Northbound
- ☐ Southbound
- ☐ Eastbound
- ☐ Westbound

Split Phasing
- ○ East/West
- ○ North/South
- ◉ None

Inx. Control
- ○ Signal
- ◉ Stop

Phase	Movement	Volume 1	Lane Use Factor - 2	Lane volume 1 X 2	Opposing Movement	Critical In. volume	*	Phase	Movement	Volume 1	Lane Use Factor - 2	Lane volume 1 X 2	Opposing Movement	Critical In. Volume	*
	NB	192	1.00	192	0	192			NB	821	1.00	821	0	821	*
	SB	995	1.00	995	7	1002	*		SB	343	1.00	343	36	379	
	EB	54	1.00	54	0	54	*		EB	46	1.00	46	0	46	*
Remarks:			* Critical volume		Total	**1056**		Remarks:			* Critical volume		Total	**867**	
						0.66	**B**							**0.54**	**A**

Critical Lane Volume Methodology
Turning Movement Summary and Level of Service

Prepared by: **STV Inc.**

Count Date: 10/6/2009
Conditions: Existing
Design Year:

Location: Snouffer School Road at Lewisberry Drive
Computed by: MMO
Date 11/17/2009

Morning Peak Hour: 7:00-8:00 AM

Evening Peak Hour: 5:00-6:00 PM

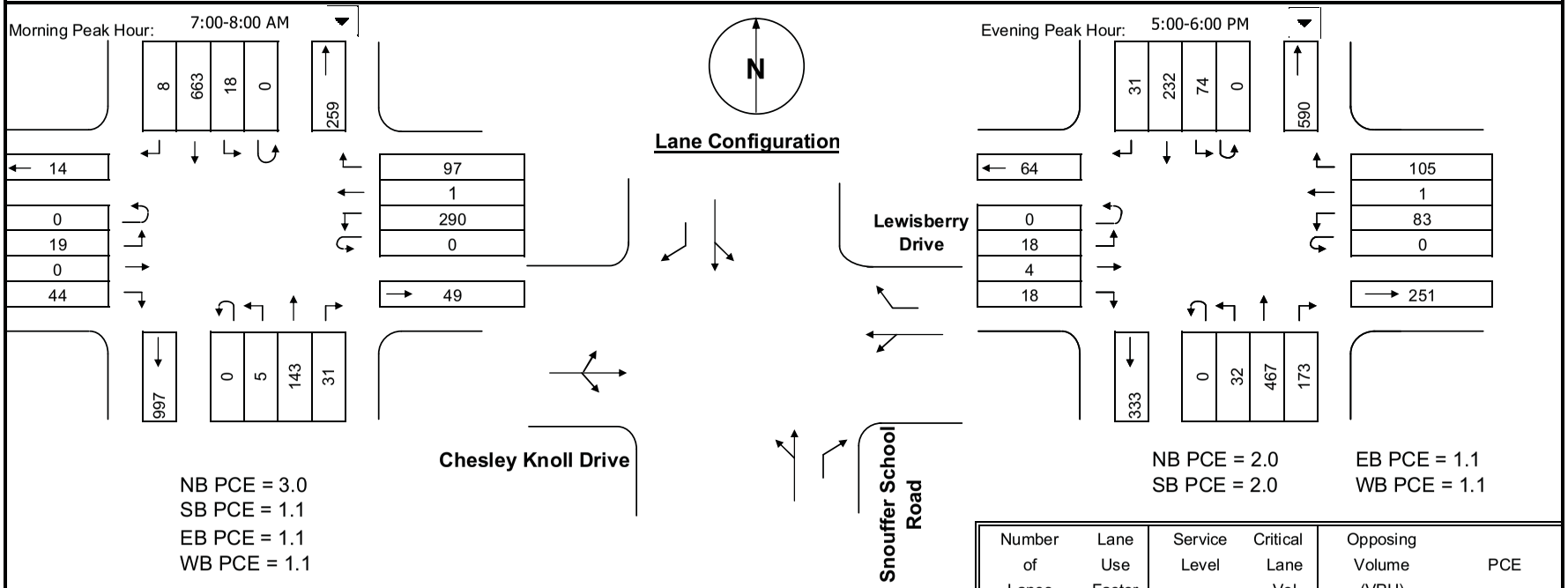

NB PCE = 3.0
SB PCE = 1.1
EB PCE = 1.1
WB PCE = 1.1

NB PCE = 2.0
SB PCE = 2.0

EB PCE = 1.1
WB PCE = 1.1

Number of Lanes	Lane Use Factor	Service Level	Critical Lane Vol	Opposing Volume (VPH)	PCE
1 = 1.00		A <= 1000		<= 199	1.1
2 = 0.53		B <= 1150		<= 599	2.0
3 = 0.37		C <= 1300		<= 799	3.0
4 = 0.30		D <= 1450		<= 999	4.0
5 = 0.25		E <= 1600		> 1000	5.0
		F > 1600			

Phasing

RTOR/Overlap
- ☐ Northbound
- ☐ Southbound
- ☐ Eastbound
- ☐ Westbound

Split Phasing
- ○ East/West
- ○ North/South
- ◉ None

Inx. Control
- ◉ Signal
- ○ Stop

Phase	Movement	Volume 1	Lane Use Factor - 2	Lane volume 1 X 2	Opposing Movement	Critical In. volume	*
	NB	158	1.00	158	18	176	
	SB	683	1.00	683	5	688	*
	EB	65	1.00	65	290	355	*
	WB	320	1.00	320	19	339	
Remarks:			* Critical volume		Total	**1043**	
						0.65	**B**

Phase	Movement	Volume 1	Lane Use Factor - 2	Lane volume 1 X 2	Opposing Movement	Critical In. Volume	*
	NB	531	1.00	531	74	605	*
	SB	380	1.00	380	32	412	
	EB	42	1.00	42	83	125	*
	WB	92	1.00	92	18	110	
Remarks:			* Critical volume		Total	**730**	
						0.46	**A**

Critical Lane Volume Methodology
Turning Movement Summary and Level of Service

Prepared by: **STV Inc.**

Count Date: 10/1/2009
Conditions: Existing
Design Year:

Location: Snouffer School Road at Goshen Road
Computed by: MMO
Date 11/17/2009

Morning Peak Hour: 6:45-7:45 AM

Evening Peak Hour: 5:00-6:00 PM

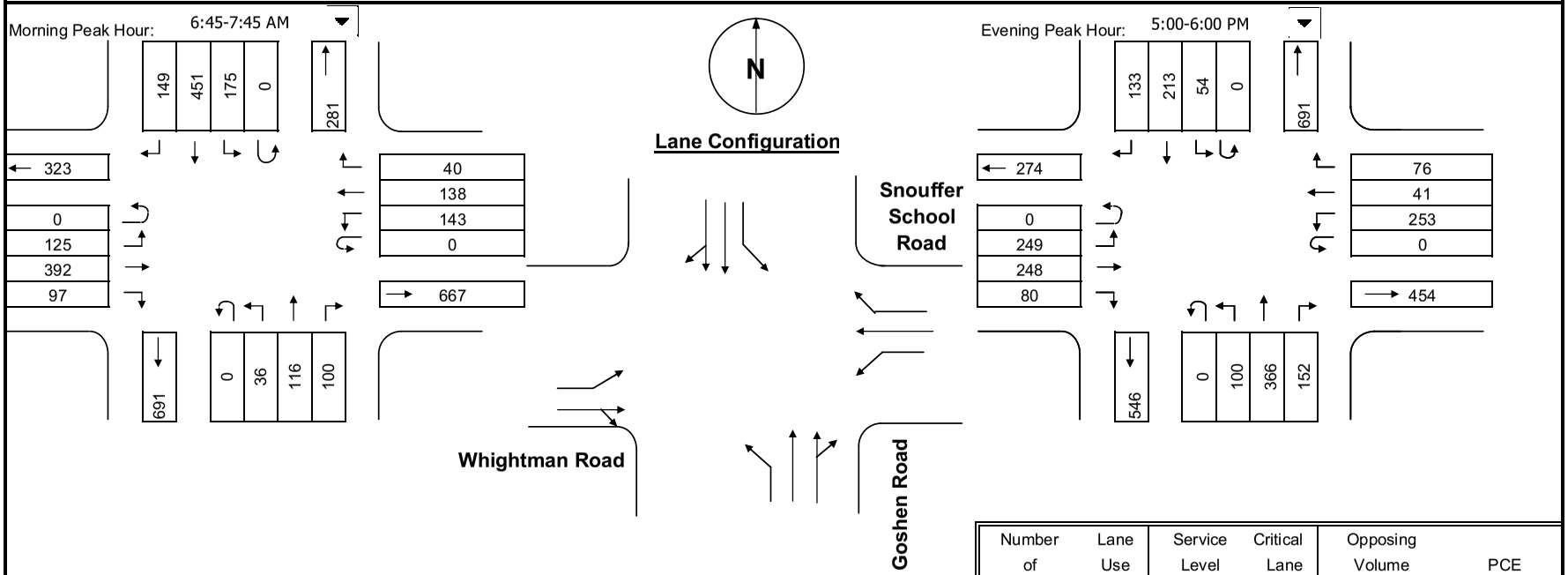

Number of Lanes	Lane Use Factor	Service Level	Critical Lane Vol	Opposing Volume (VPH)	PCE
1 = 1.00		A <= 1000		<= 199	1.1
2 = 0.53		B <= 1150		<= 599	2.0
3 = 0.37		C <= 1300		<= 799	3.0
4 = 0.30		D <= 1450		<= 999	4.0
5 = 0.25		E <= 1600		> 1000	5.0
		F > 1600			

Phasing

RTOR/Overlap
- ☐ Northbound
- ☐ Southbound
- ☐ Eastbound
- ☐ Westbound

Split Phasing
- ○ East/West
- ○ North/South
- ◉ None

Inx. Control
- ◉ Signal
- ○ Stop

Phase	Movement	Volume 1	Lane Use Factor - 2	Lane volume 1 X 2	Opposing Movement	Critical In. volume	*	Phase	Movement	Volume 1	Lane Use Factor - 2	Lane volume 1 X 2	Opposing Movement	Critical In. Volume	*
	NB	216	0.53	114	175	289			NB	518	0.53	275	54	329	*
	SB	600	0.53	318	36	354	*		SB	346	0.53	183	100	283	
	EB	489	1.00	489	143	632	*		EB	328	1.00	328	253	581	*
	WB	138	1.00	138	125	263			WB	41	1.00	41	249	290	
Remarks:			* Critical volume		Total	**986**		Remarks:			* Critical volume		Total	**910**	
						0.62	**A**							**0.57**	**A**

Critical Lane Volume Methodology
Turning Movement Summary and Level of Service

Prepared by: **STV Inc.**

Count Date: 9/30/2009
Conditions: Existing
Design Year:

Location: Centerway Road at Goshen Road
Computed by: MMO
Date 11/17/2009

Morning Peak Hour: 7:30-8:30 AM

Evening Peak Hour: 5:00-6:00 PM

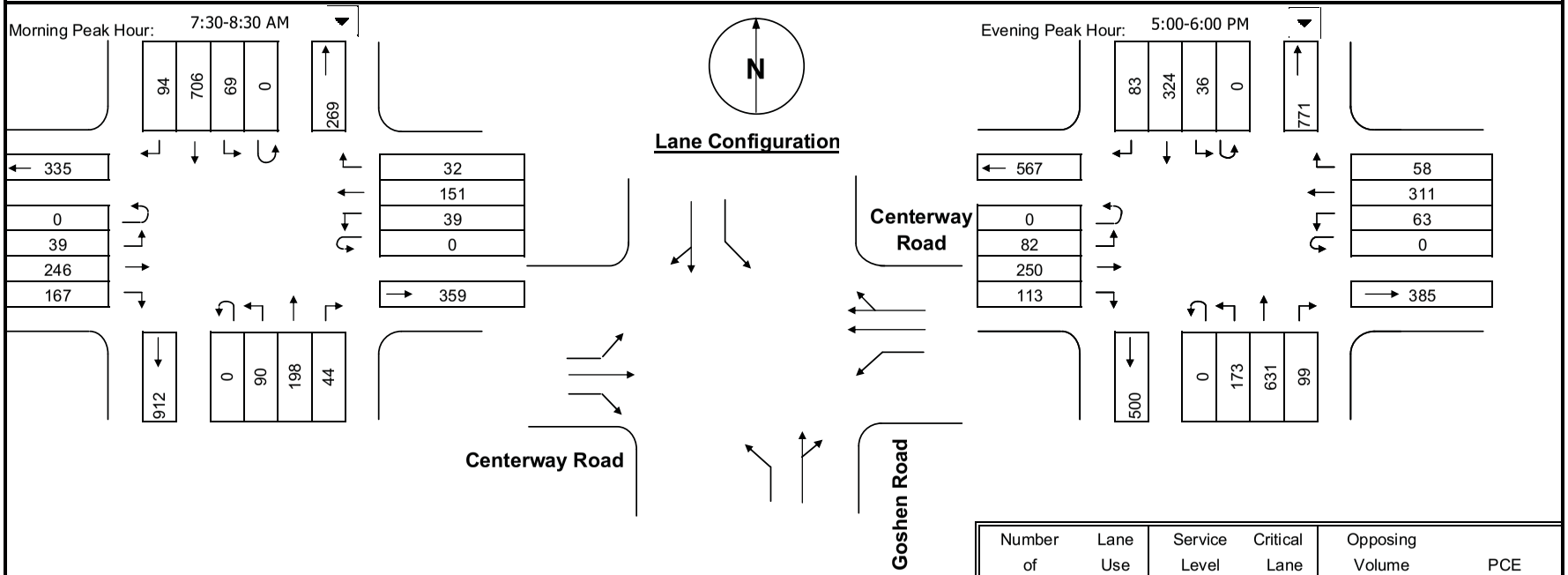

Number of Lanes	Lane Use Factor	Service Level	Critical Lane Vol	Opposing Volume (VPH)	PCE
1 = 1.00		A <= 1000		<= 199	1.1
2 = 0.53		B <= 1150		<= 599	2.0
3 = 0.37		C <= 1300		<= 799	3.0
4 = 0.30		D <= 1450		<= 999	4.0
5 = 0.25		E <= 1600		> 1000	5.0
		F > 1600			

Phasing

RTOR/Overlap
- ☐ Northbound
- ☐ Southbound
- ☐ Eastbound
- ☐ Westbound

Split Phasing
- ○ East/West
- ○ North/South
- ◉ None

Inx. Control
- ◉ Signal
- ○ Stop

Phase	Movement	Volume 1	Lane Use Factor - 2	Lane volume 1 X 2	Opposing Movement	Critical In. volume	*	Phase	Movement	Volume 1	Lane Use Factor - 2	Lane volume 1 X 2	Opposing Movement	Critical In. Volume	*
	NB	242	1.00	242	69	311			NB	730	1.00	730	36	766	*
	SB	800	1.00	800	90	890	*		SB	407	1.00	407	173	580	
	EB	246	1.00	246	39	285	*		EB	250	1.00	250	63	313	*
	WB	183	0.53	97	39	136			WB	369	0.53	196	82	278	
Remarks:			* Critical volume		Total	**1175**		Remarks:			* Critical volume		Total	**1079**	
						0.73	**C**							**0.67**	**B**

Critical Lane Volume Methodology
Turning Movement Summary and Level of Service

Prepared by: **STV Inc.**

Count Date: 9/30/2009
Conditions: Existing
Design Year:

Location: Centerway Road at Montgomery Village Avenue
Computed by: MMO
Date 11/17/2009

Morning Peak Hour: 7:30-8:30 AM

Evening Peak Hour: 5:00-6:00 PM

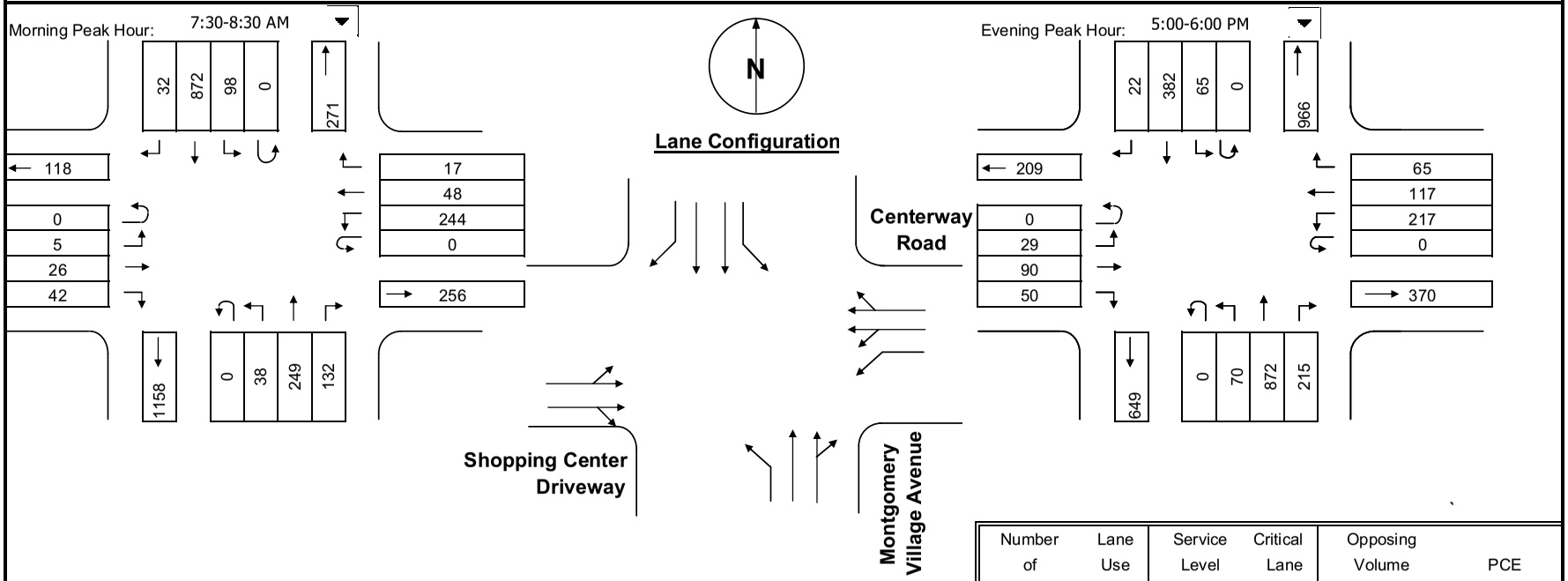

Number of Lanes	Lane Use Factor	Service Level	Critical Lane Vol	Opposing Volume (VPH)	PCE
1 =	1.00	A	<= 1000	<= 199	1.1
2 =	0.53	B	<= 1150	<= 599	2.0
3 =	0.37	C	<= 1300	<= 799	3.0
4 =	0.30	D	<= 1450	<= 999	4.0
5 =	0.25	E	<= 1600	> 1000	5.0
		F	> 1600		

Phasing

RTOR/Overlap
- ☐ Northbound
- ☐ Southbound
- ☐ Eastbound
- ☐ Westbound

Split Phasing
- ◉ East/West
- ○ North/South
- ○ None

Inx. Control
- ◉ Signal
- ○ Stop

Phase	Movement	Volume 1	Lane Use Factor - 2	Lane volume 1 X 2	Opposing Movement	Critical In. volume	*	Phase	Movement	Volume 1	Lane Use Factor - 2	Lane volume 1 X 2	Opposing Movement	Critical In. Volume	*
	NB	381	0.53	202	98	300			NB	1087	0.53	576	65	641	*
	SB	872	0.53	462	38	500	*		SB	382	0.53	202	70	272	
	EB	73	0.53	39	0	39	*		EB	169	0.53	90	0	90	*
	WB	309	0.40	124	0	124	*		WB	399	0.40	160	0	160	*
Remarks:			* Critical volume		Total	**662**		Remarks:			* Critical volume		Total	**890**	
						0.41	**A**							**0.56**	**A**

Movement	EBL	EBT	EBR	WBL	WBT	WBR	NBL	NBT	NBR	SBL	SBT	SBR
Lane Configurations												
Volume (vph)	5	26	42	244	48	17	38	249	132	98	872	32
Ideal Flow (vphpl)	1900	1900	1900	1900	1900	1900	1900	1900	1900	1900	1900	1900
Total Lost time (s)		7.0		7.0	7.0		7.0	7.0		7.0	7.0	7.0
Lane Util. Factor		0.95		0.91	0.91		1.00	0.95		1.00	0.91	0.91
Frt		0.91		1.00	0.99		1.00	0.95		1.00	1.00	0.85
Flt Protected		1.00		0.95	0.97		0.95	1.00		0.95	1.00	1.00
Satd. Flow (prot)		3220		1610	3239		1770	3356		1770	3388	1441
Flt Permitted		1.00		0.95	0.97		0.24	1.00		0.51	1.00	1.00
Satd. Flow (perm)		3220		1610	3239		452	3356		949	3388	1441
Peak-hour factor, PHF	0.92	0.92	0.92	0.92	0.92	0.92	0.92	0.92	0.92	0.92	0.92	0.92
Adj. Flow (vph)	5	28	46	265	52	18	41	271	143	107	948	35
RTOR Reduction (vph)	0	42	0	0	6	0	0	37	0	0	0	12
Lane Group Flow (vph)	0	37	0	132	197	0	41	377	0	107	952	19
Turn Type	Split			Split			Perm			Perm		Perm
Protected Phases	4	4		8	8			2			6	
Permitted Phases							2			6		6
Actuated Green, G (s)		10.0		14.7	14.7		74.3	74.3		74.3	74.3	74.3
Effective Green, g (s)		10.0		14.7	14.7		74.3	74.3		74.3	74.3	74.3
Actuated g/C Ratio		0.08		0.12	0.12		0.62	0.62		0.62	0.62	0.62
Clearance Time (s)		7.0		7.0	7.0		7.0	7.0		7.0	7.0	7.0
Vehicle Extension (s)		3.0		3.0	3.0		3.0	3.0		3.0	3.0	3.0
Lane Grp Cap (vph)		268		197	397		280	2078		588	2098	892
v/s Ratio Prot		c0.01		c0.08	0.06			0.11			c0.28	
v/s Ratio Perm							0.09			0.11		0.01
v/c Ratio		0.14		0.67	0.50		0.15	0.18		0.18	0.45	0.02
Uniform Delay, d1		51.0		50.3	49.2		9.6	9.8		9.8	12.1	8.8
Progression Factor		1.00		1.00	1.00		1.00	1.00		1.00	1.00	1.00
Incremental Delay, d2		0.2		8.6	1.0		1.1	0.2		0.7	0.7	0.0
Delay (s)		51.2		59.0	50.2		10.7	10.0		10.5	12.8	8.9
Level of Service		D		E	D		B	A		B	B	A
Approach Delay (s)		51.2			53.6			10.1			12.5	
Approach LOS		D			D			B			B	

Intersection Summary

HCM Average Control Delay	20.5	HCM Level of Service	C
HCM Volume to Capacity ratio	0.45		
Actuated Cycle Length (s)	120.0	Sum of lost time (s)	21.0
Intersection Capacity Utilization	63.7%	ICU Level of Service	B
Analysis Period (min)	15		

c Critical Lane Group

Movement	EBL	EBT	EBR	WBL	WBT	WBR	NBL	NBT	NBR	SBL	SBT	SBR
Lane Configurations												
Volume (vph)	39	246	167	39	151	32	90	198	44	69	706	94
Ideal Flow (vphpl)	1900	1900	1900	1900	1900	1900	1900	1900	1900	1900	1900	1900
Total Lost time (s)	5.0	5.0	5.0	5.0	5.0		5.0	5.0		5.0	5.0	
Lane Util. Factor	1.00	1.00	1.00	1.00	0.95		1.00	1.00		1.00	1.00	
Frt	1.00	1.00	0.85	1.00	0.97		1.00	0.97		1.00	0.98	
Flt Protected	0.95	1.00	1.00	0.95	1.00		0.95	1.00		0.95	1.00	
Satd. Flow (prot)	1770	1863	1583	1770	3446		1770	1812		1770	1830	
Flt Permitted	0.62	1.00	1.00	0.28	1.00		0.16	1.00		0.60	1.00	
Satd. Flow (perm)	1161	1863	1583	515	3446		292	1812		1112	1830	
Peak-hour factor, PHF	0.92	0.92	0.92	0.92	0.92	0.92	0.92	0.92	0.92	0.92	0.92	0.92
Adj. Flow (vph)	42	267	182	42	164	35	98	215	48	75	767	102
RTOR Reduction (vph)	0	0	150	0	18	0	0	8	0	0	4	0
Lane Group Flow (vph)	42	267	32	42	181	0	98	255	0	75	865	0
Turn Type	Perm		Perm	Perm			pm+pt			Perm		
Protected Phases		4			8		5	2			6	
Permitted Phases	4		4	8			2			6		
Actuated Green, G (s)	17.5	17.5	17.5	17.5	17.5		72.5	72.5		61.5	61.5	
Effective Green, g (s)	17.5	17.5	17.5	17.5	17.5		72.5	72.5		61.5	61.5	
Actuated g/C Ratio	0.18	0.18	0.18	0.18	0.18		0.72	0.72		0.62	0.62	
Clearance Time (s)	5.0	5.0	5.0	5.0	5.0		5.0	5.0		5.0	5.0	
Vehicle Extension (s)	3.0	3.0	3.0	3.0	3.0		3.0	3.0		3.0	3.0	
Lane Grp Cap (vph)	203	326	277	90	603		300	1314		684	1125	
v/s Ratio Prot		c0.14			0.05		c0.02	0.14			c0.47	
v/s Ratio Perm	0.04		0.02	0.08			0.22			0.07		
v/c Ratio	0.21	0.82	0.11	0.47	0.30		0.33	0.19		0.11	0.77	
Uniform Delay, d1	35.3	39.7	34.7	37.1	35.9		11.6	4.4		7.9	14.1	
Progression Factor	1.00	1.00	1.00	1.00	1.00		1.00	1.00		1.00	1.00	
Incremental Delay, d2	0.5	14.7	0.2	3.8	0.3		0.6	0.3		0.3	5.1	
Delay (s)	35.8	54.5	34.9	40.8	36.2		12.3	4.7		8.3	19.1	
Level of Service	D	D	C	D	D		B	A		A	B	
Approach Delay (s)		45.6			37.0			6.8			18.3	
Approach LOS		D			D			A			B	

Intersection Summary

HCM Average Control Delay	25.0	HCM Level of Service	C
HCM Volume to Capacity ratio	0.75		
Actuated Cycle Length (s)	100.0	Sum of lost time (s)	15.0
Intersection Capacity Utilization	81.6%	ICU Level of Service	D
Analysis Period (min)	15		

c Critical Lane Group

Movement	EBL	EBR	NBL	NBT	SBT	SBR
Lane Configurations						
Volume (vph)	23	369	144	172	928	45
Ideal Flow (vphpl)	1900	1900	1900	1900	1900	1900
Total Lost time (s)	5.0	4.0	4.0	5.0	5.0	
Lane Util. Factor	1.00	1.00	1.00	1.00	1.00	
Frt	1.00	0.85	1.00	1.00	0.99	
Flt Protected	0.95	1.00	0.95	1.00	1.00	
Satd. Flow (prot)	1770	1583	1770	1863	1851	
Flt Permitted	0.95	1.00	0.08	1.00	1.00	
Satd. Flow (perm)	1770	1583	148	1863	1851	
Peak-hour factor, PHF	0.92	0.92	0.92	0.92	0.92	0.92
Adj. Flow (vph)	25	401	157	187	1009	49
RTOR Reduction (vph)	0	99	0	0	2	0
Lane Group Flow (vph)	25	302	157	187	1056	0
Turn Type		pm+ov	pm+pt			
Protected Phases	4	5	5	2	6	
Permitted Phases		4	2			
Actuated Green, G (s)	2.5	14.3	62.2	62.2	46.4	
Effective Green, g (s)	2.5	14.3	62.2	62.2	46.4	
Actuated g/C Ratio	0.03	0.19	0.83	0.83	0.62	
Clearance Time (s)	5.0	4.0	4.0	5.0	5.0	
Vehicle Extension (s)	3.0	3.0	3.0	3.0	3.0	
Lane Grp Cap (vph)	59	303	379	1551	1150	
v/s Ratio Prot	0.01	c0.16	0.07	0.10	c0.57	
v/s Ratio Perm		0.03	0.28			
v/c Ratio	0.42	1.00	0.41	0.12	0.92	
Uniform Delay, d1	35.4	30.2	15.2	1.2	12.5	
Progression Factor	1.00	1.00	1.00	1.00	1.00	
Incremental Delay, d2	4.8	50.1	0.7	0.0	11.5	
Delay (s)	40.2	80.3	15.9	1.2	24.0	
Level of Service	D	F	B	A	C	
Approach Delay (s)	77.9			7.9	24.0	
Approach LOS	E			A	C	

Intersection Summary

HCM Average Control Delay	33.5	HCM Level of Service	C
HCM Volume to Capacity ratio	0.92		
Actuated Cycle Length (s)	74.7	Sum of lost time (s)	13.0
Intersection Capacity Utilization	81.9%	ICU Level of Service	D
Analysis Period (min)	15		

c Critical Lane Group

Movement	EBL	EBT	EBR	WBL	WBT	WBR	NBL	NBT	NBR	SBL	SBT	SBR
Lane Configurations												
Volume (vph)	92	550	114	130	462	125	94	259	115	349	847	214
Ideal Flow (vphpl)	1900	1900	1900	1900	1900	1900	1900	1900	1900	1900	1900	1900
Total Lost time (s)	5.0	5.0	5.0	5.0	5.0	5.0	4.0	5.0	5.0	4.0	5.0	5.0
Lane Util. Factor	1.00	0.95	1.00	0.91	0.91	1.00	1.00	0.95	1.00	1.00	0.95	1.00
Frt	1.00	1.00	0.85	1.00	1.00	0.85	1.00	1.00	0.85	1.00	1.00	0.85
Flt Protected	0.95	1.00	1.00	0.95	1.00	1.00	0.95	1.00	1.00	0.95	1.00	1.00
Satd. Flow (prot)	1770	3539	1583	1610	3386	1583	1770	3539	1583	1770	3539	1583
Flt Permitted	0.95	1.00	1.00	0.95	1.00	1.00	0.23	1.00	1.00	0.48	1.00	1.00
Satd. Flow (perm)	1770	3539	1583	1610	3386	1583	429	3539	1583	891	3539	1583
Peak-hour factor, PHF	0.92	0.92	0.92	0.92	0.92	0.92	0.92	0.92	0.92	0.92	0.92	0.92
Adj. Flow (vph)	100	598	124	141	502	136	102	282	125	379	921	233
RTOR Reduction (vph)	0	0	104	0	0	107	0	0	89	0	0	141
Lane Group Flow (vph)	100	598	20	127	516	29	102	282	36	379	921	92
Turn Type	Split		Perm	Split		Perm	pm+pt		Perm	pm+pt		Perm
Protected Phases	2	2		6	6		3	8		7	4	
Permitted Phases			2			6	8		8	4		4
Actuated Green, G (s)	19.0	19.0	19.0	25.4	25.4	25.4	43.7	34.5	34.5	60.6	47.4	47.4
Effective Green, g (s)	19.0	19.0	19.0	25.4	25.4	25.4	43.7	34.5	34.5	60.6	47.4	47.4
Actuated g/C Ratio	0.16	0.16	0.16	0.21	0.21	0.21	0.36	0.29	0.29	0.50	0.39	0.39
Clearance Time (s)	5.0	5.0	5.0	5.0	5.0	5.0	4.0	5.0	5.0	4.0	5.0	5.0
Vehicle Extension (s)	3.0	3.0	3.0	3.0	3.0	3.0	3.0	3.0	3.0	3.0	3.0	3.0
Lane Grp Cap (vph)	280	560	251	341	717	335	259	1017	455	612	1398	625
v/s Ratio Prot	0.06	c0.17		0.08	c0.15		0.03	0.08		c0.11	c0.26	
v/s Ratio Perm			0.01			0.02	0.11		0.02	0.20		0.06
v/c Ratio	0.36	1.07	0.08	0.37	0.72	0.09	0.39	0.28	0.08	0.62	0.66	0.15
Uniform Delay, d1	45.1	50.5	43.0	40.5	44.0	38.0	26.1	33.1	31.2	19.0	29.7	23.3
Progression Factor	1.00	1.00	1.00	1.00	1.00	1.00	1.00	1.00	1.00	0.88	0.94	1.00
Incremental Delay, d2	3.5	57.4	0.6	0.7	3.5	0.1	1.0	0.7	0.3	1.7	1.0	0.1
Delay (s)	48.6	107.9	43.6	41.2	47.5	38.1	27.1	33.8	31.5	18.5	28.8	23.4
Level of Service	D	F	D	D	D	D	C	C	C	B	C	C
Approach Delay (s)		91.0			44.8			31.9			25.4	
Approach LOS		F			D			C			C	

Intersection Summary

HCM Average Control Delay	45.3	HCM Level of Service	D
HCM Volume to Capacity ratio	0.73		
Actuated Cycle Length (s)	120.0	Sum of lost time (s)	14.0
Intersection Capacity Utilization	72.4%	ICU Level of Service	C
Analysis Period (min)	15		

c Critical Lane Group

Movement	EBL	EBT	EBR	WBL	WBT	WBR	NBL	NBT	NBR	SBL	SBT	SBR
Lane Configurations												
Volume (vph)	125	392	97	143	138	40	36	116	100	175	451	149
Ideal Flow (vphpl)	1900	1900	1900	1900	1900	1900	1900	1900	1900	1900	1900	1900
Total Lost time (s)	4.0	5.0		4.0	4.0	4.0	6.0	6.0		4.0	6.0	
Lane Util. Factor	1.00	1.00		1.00	1.00	1.00	1.00	0.95		1.00	0.95	
Frt	1.00	0.97		1.00	1.00	0.85	1.00	0.93		1.00	0.96	
Flt Protected	0.95	1.00		0.95	1.00	1.00	0.95	1.00		0.95	1.00	
Satd. Flow (prot)	1770	1807		1770	1863	1583	1770	3293		1770	3407	
Flt Permitted	0.62	1.00		0.13	1.00	1.00	0.40	1.00		0.55	1.00	
Satd. Flow (perm)	1157	1807		239	1863	1583	753	3293		1022	3407	
Peak-hour factor, PHF	0.92	0.92	0.92	0.92	0.92	0.92	0.92	0.92	0.92	0.92	0.92	0.92
Adj. Flow (vph)	136	426	105	155	150	43	39	126	109	190	490	162
RTOR Reduction (vph)	0	8	0	0	0	28	0	74	0	0	24	0
Lane Group Flow (vph)	136	523	0	155	150	15	39	161	0	190	628	0
Turn Type	pm+pt			custom		custom	Perm			pm+pt		
Protected Phases	7	4		3				2		1	6	
Permitted Phases	4			8	8	8	2			6		
Actuated Green, G (s)	49.8	39.1		52.4	40.9	40.9	38.8	38.8		54.4	54.4	
Effective Green, g (s)	49.8	39.1		52.4	40.9	40.9	38.8	38.8		54.4	54.4	
Actuated g/C Ratio	0.42	0.33		0.44	0.34	0.34	0.32	0.32		0.45	0.45	
Clearance Time (s)	4.0	5.0		4.0	4.0	4.0	6.0	6.0		4.0	6.0	
Vehicle Extension (s)	3.0	3.0		3.0	3.0	3.0	3.0	3.0		3.0	3.0	
Lane Grp Cap (vph)	535	589		251	635	540	243	1065		536	1545	
v/s Ratio Prot	0.02	c0.29		c0.06				0.05		0.03	c0.18	
v/s Ratio Perm	0.08			0.21	0.08	0.01	0.05			0.13		
v/c Ratio	0.25	0.89		0.62	0.24	0.03	0.16	0.15		0.35	0.41	
Uniform Delay, d1	22.3	38.4		25.3	28.4	26.3	29.0	28.9		20.2	22.0	
Progression Factor	1.00	1.00		1.18	0.93	0.82	1.00	1.00		1.00	1.00	
Incremental Delay, d2	0.3	15.1		4.5	0.2	0.0	1.4	0.3		0.4	0.8	
Delay (s)	22.5	53.4		34.3	26.4	21.6	30.4	29.2		20.6	22.8	
Level of Service	C	D		C	C	C	C	C		C	C	
Approach Delay (s)		47.1			29.3			29.4			22.3	
Approach LOS		D			C			C			C	

Intersection Summary

HCM Average Control Delay	32.1	HCM Level of Service	C
HCM Volume to Capacity ratio	0.61		
Actuated Cycle Length (s)	120.0	Sum of lost time (s)	15.0
Intersection Capacity Utilization	75.0%	ICU Level of Service	D
Analysis Period (min)	15		

c Critical Lane Group

Movement	EBL	EBT	EBR	WBL	WBT	WBR	NBL	NBT	NBR	SBL	SBT	SBR
Lane Configurations												
Volume (vph)	19	0	44	290	1	97	5	143	31	18	663	8
Ideal Flow (vphpl)	1900	1900	1900	1900	1900	1900	1900	1900	1900	1900	1900	1900
Total Lost time (s)		5.0			5.0	5.0		5.0	5.0		5.0	5.0
Lane Util. Factor		1.00			1.00	1.00		1.00	1.00		1.00	1.00
Frt		0.91			1.00	0.85		1.00	0.85		1.00	0.85
Flt Protected		0.99			0.95	1.00		1.00	1.00		1.00	1.00
Satd. Flow (prot)		1663			1774	1583		1860	1583		1860	1583
Flt Permitted		0.67			0.70	1.00		0.98	1.00		0.99	1.00
Satd. Flow (perm)		1133			1300	1583		1831	1583		1846	1583
Peak-hour factor, PHF	0.92	0.92	0.92	0.92	0.92	0.92	0.92	0.92	0.92	0.92	0.92	0.92
Adj. Flow (vph)	21	0	48	315	1	105	5	155	34	20	721	9
RTOR Reduction (vph)	0	37	0	0	0	81	0	0	10	0	0	2
Lane Group Flow (vph)	0	32	0	0	316	24	0	160	24	0	741	7
Turn Type	Perm			Perm		Perm	Perm		Perm	Perm		Perm
Protected Phases		4			8			2			6	
Permitted Phases	4			8		8	2		2	6		6
Actuated Green, G (s)		27.0			27.0	27.0		83.0	83.0		83.0	83.0
Effective Green, g (s)		27.0			27.0	27.0		83.0	83.0		83.0	83.0
Actuated g/C Ratio		0.22			0.22	0.22		0.69	0.69		0.69	0.69
Clearance Time (s)		5.0			5.0	5.0		5.0	5.0		5.0	5.0
Vehicle Extension (s)		3.0			3.0	3.0		3.0	3.0		3.0	3.0
Lane Grp Cap (vph)		255			293	356		1266	1095		1277	1095
v/s Ratio Prot												
v/s Ratio Perm		0.03			c0.24	0.01		0.09	0.01		c0.40	0.00
v/c Ratio		0.12			1.08	0.07		0.13	0.02		0.58	0.01
Uniform Delay, d1		37.1			46.5	36.6		6.3	5.8		9.5	5.7
Progression Factor		1.00			1.00	1.00		1.00	1.00		2.14	2.02
Incremental Delay, d2		0.2			75.1	0.1		0.2	0.0		0.6	0.0
Delay (s)		37.3			121.6	36.7		6.5	5.8		21.0	11.6
Level of Service		D			F	D		A	A		C	B
Approach Delay (s)		37.3			100.4			6.3			20.9	
Approach LOS		D			F			A			C	

Intersection Summary

HCM Average Control Delay	43.0	HCM Level of Service	D
HCM Volume to Capacity ratio	0.70		
Actuated Cycle Length (s)	120.0	Sum of lost time (s)	10.0
Intersection Capacity Utilization	79.0%	ICU Level of Service	D
Analysis Period (min)	15		

c Critical Lane Group

Movement	EBL	EBR	NBL	NBT	SBT	SBR
Lane Configurations						
Volume (veh/h)	9	45	7	157	995	19
Sign Control	Stop			Free	Free	
Grade	0%			0%	0%	
Peak Hour Factor	0.92	0.92	0.92	0.92	0.92	0.92
Hourly flow rate (vph)	10	49	8	171	1082	21
Pedestrians				45	9	
Lane Width (ft)				12.0	12.0	
Walking Speed (ft/s)				4.0	4.0	
Percent Blockage				4	1	
Right turn flare (veh)						
Median type				None	None	
Median storage veh)						
Upstream signal (ft)						
pX, platoon unblocked						
vC, conflicting volume	1276	1127	1102			
vC1, stage 1 conf vol						
vC2, stage 2 conf vol						
vCu, unblocked vol	1276	1127	1102			
tC, single (s)	6.4	6.2	4.1			
tC, 2 stage (s)						
tF (s)	3.5	3.3	2.2			
p0 queue free %	95	80	99			
cM capacity (veh/h)	180	240	633			

Direction, Lane #	EB 1	NB 1	SB 1	SB 2
Volume Total	59	178	1082	21
Volume Left	10	8	0	0
Volume Right	49	0	0	21
cSH	227	633	1700	1700
Volume to Capacity	0.26	0.01	0.64	0.01
Queue Length 95th (ft)	25	1	0	0
Control Delay (s)	26.3	0.6	0.0	0.0
Lane LOS	D	A		
Approach Delay (s)	26.3	0.6	0.0	
Approach LOS	D			

Intersection Summary			
Average Delay	1.2		
Intersection Capacity Utilization	70.8%	ICU Level of Service	C
Analysis Period (min)	15		

Movement	EBL	EBT	EBR	WBL	WBT	WBR	NBL	NBT	NBR	SBL	SBT	SBR
Lane Configurations												
Volume (vph)	5	4	33	66	2	7	6	341	104	33	1363	9
Ideal Flow (vphpl)	1900	1900	1900	1900	1900	1900	1900	1900	1900	1900	1900	1900
Total Lost time (s)		5.0		5.0	5.0		5.0	5.0		5.0	5.0	
Lane Util. Factor		1.00		1.00	1.00		1.00	0.95		1.00	0.95	
Frt		0.89		1.00	0.88		1.00	0.96		1.00	1.00	
Flt Protected		0.99		0.95	1.00		0.95	1.00		0.95	1.00	
Satd. Flow (prot)		1652		1770	1639		1770	3415		1770	3536	
Flt Permitted		0.97		0.84	1.00		0.17	1.00		0.45	1.00	
Satd. Flow (perm)		1610		1566	1639		320	3415		841	3536	
Peak-hour factor, PHF	0.92	0.92	0.92	0.92	0.92	0.92	0.92	0.92	0.92	0.92	0.92	0.92
Adj. Flow (vph)	5	4	36	72	2	8	7	371	113	36	1482	10
RTOR Reduction (vph)	0	33	0	0	7	0	0	13	0	0	0	0
Lane Group Flow (vph)	0	12	0	72	3	0	7	471	0	36	1492	0
Turn Type	Perm			Perm			Perm			pm+pt		
Protected Phases		4			8			2		1	6	
Permitted Phases	4			8			2			6		
Actuated Green, G (s)		9.9		9.9	9.9		91.4	91.4		100.1	100.1	
Effective Green, g (s)		9.9		9.9	9.9		91.4	91.4		100.1	100.1	
Actuated g/C Ratio		0.08		0.08	0.08		0.76	0.76		0.83	0.83	
Clearance Time (s)		5.0		5.0	5.0		5.0	5.0		5.0	5.0	
Vehicle Extension (s)		3.0		3.0	3.0		3.0	3.0		3.0	3.0	
Lane Grp Cap (vph)		133		129	135		244	2601		730	2950	
v/s Ratio Prot					0.00			0.14		0.00	c0.42	
v/s Ratio Perm		0.01		c0.05			0.02			0.04		
v/c Ratio		0.09		0.56	0.02		0.03	0.18		0.05	0.51	
Uniform Delay, d1		50.9		52.9	50.6		3.5	4.0		1.8	2.9	
Progression Factor		1.00		1.00	1.00		2.41	3.00		1.00	1.00	
Incremental Delay, d2		0.3		5.2	0.1		0.2	0.1		0.0	0.6	
Delay (s)		51.2		58.1	50.6		8.6	12.0		1.8	3.5	
Level of Service		D		E	D		A	B		A	A	
Approach Delay (s)		51.2			57.2			12.0			3.4	
Approach LOS		D			E			B			A	

Intersection Summary

HCM Average Control Delay	8.4	HCM Level of Service	A
HCM Volume to Capacity ratio	0.51		
Actuated Cycle Length (s)	120.0	Sum of lost time (s)	10.0
Intersection Capacity Utilization	56.6%	ICU Level of Service	B
Analysis Period (min)	15		

c Critical Lane Group

Movement	EBL	EBT	EBR	WBL	WBT	WBR	NBL	NBT	NBR	SBL	SBT	SBR
Lane Configurations												
Volume (vph)	29	90	50	217	117	65	70	872	215	65	382	22
Ideal Flow (vphpl)	1900	1900	1900	1900	1900	1900	1900	1900	1900	1900	1900	1900
Total Lost time (s)		7.0		7.0	7.0		7.0	7.0		7.0	7.0	7.0
Lane Util. Factor		0.95		0.91	0.91		1.00	0.95		1.00	0.91	0.91
Frt		0.96		1.00	0.96		1.00	0.97		1.00	1.00	0.85
Flt Protected		0.99		0.95	0.98		0.95	1.00		0.95	1.00	1.00
Satd. Flow (prot)		3354		1610	3215		1770	3434		1770	3388	1441
Flt Permitted		0.99		0.95	0.98		0.50	1.00		0.17	1.00	1.00
Satd. Flow (perm)		3354		1610	3215		926	3434		323	3388	1441
Peak-hour factor, PHF	0.92	0.92	0.92	0.92	0.92	0.92	0.92	0.92	0.92	0.92	0.92	0.92
Adj. Flow (vph)	32	98	54	236	127	71	76	948	234	71	415	24
RTOR Reduction (vph)	0	44	0	0	24	0	0	14	0	0	0	9
Lane Group Flow (vph)	0	140	0	146	264	0	76	1168	0	71	417	13
Turn Type	Split			Split			Perm			Perm		Perm
Protected Phases	4	4		8	8			2			6	
Permitted Phases							2			6		6
Actuated Green, G (s)		13.5		15.3	15.3		70.2	70.2		70.2	70.2	70.2
Effective Green, g (s)		13.5		15.3	15.3		70.2	70.2		70.2	70.2	70.2
Actuated g/C Ratio		0.11		0.13	0.13		0.59	0.59		0.59	0.59	0.59
Clearance Time (s)		7.0		7.0	7.0		7.0	7.0		7.0	7.0	7.0
Vehicle Extension (s)		3.0		3.0	3.0		3.0	3.0		3.0	3.0	3.0
Lane Grp Cap (vph)		377		205	410		542	2009		189	1982	843
v/s Ratio Prot		c0.04		c0.09	0.08			c0.34			0.12	
v/s Ratio Perm							0.08			0.22		0.01
v/c Ratio		0.37		0.71	0.64		0.14	0.58		0.38	0.21	0.02
Uniform Delay, d1		49.3		50.2	49.8		11.3	15.7		13.2	11.8	10.4
Progression Factor		1.00		1.00	1.00		1.00	1.00		1.00	1.00	1.00
Incremental Delay, d2		0.6		11.1	3.4		0.5	1.2		5.6	0.2	0.0
Delay (s)		49.9		61.3	53.2		11.8	16.9		18.9	12.0	10.5
Level of Service		D		E	D		B	B		B	B	B
Approach Delay (s)		49.9			55.9			16.6			12.9	
Approach LOS		D			E			B			B	

Intersection Summary

HCM Average Control Delay	25.5	HCM Level of Service	C
HCM Volume to Capacity ratio	0.57		
Actuated Cycle Length (s)	120.0	Sum of lost time (s)	21.0
Intersection Capacity Utilization	75.3%	ICU Level of Service	D
Analysis Period (min)	15		

c Critical Lane Group

Movement	EBL	EBT	EBR	WBL	WBT	WBR	NBL	NBT	NBR	SBL	SBT	SBR
Lane Configurations												
Volume (vph)	82	250	113	63	311	58	173	631	99	36	324	83
Ideal Flow (vphpl)	1900	1900	1900	1900	1900	1900	1900	1900	1900	1900	1900	1900
Total Lost time (s)	5.0	5.0	5.0	5.0	5.0		5.0	5.0		5.0	5.0	
Lane Util. Factor	1.00	1.00	1.00	1.00	0.95		1.00	1.00		1.00	1.00	
Frt	1.00	1.00	0.85	1.00	0.98		1.00	0.98		1.00	0.97	
Flt Protected	0.95	1.00	1.00	0.95	1.00		0.95	1.00		0.95	1.00	
Satd. Flow (prot)	1770	1863	1583	1770	3456		1770	1825		1770	1806	
Flt Permitted	0.37	1.00	1.00	0.32	1.00		0.38	1.00		0.34	1.00	
Satd. Flow (perm)	697	1863	1583	604	3456		716	1825		625	1806	
Peak-hour factor, PHF	0.92	0.92	0.92	0.92	0.92	0.92	0.92	0.92	0.92	0.92	0.92	0.92
Adj. Flow (vph)	89	272	123	68	338	63	188	686	108	39	352	90
RTOR Reduction (vph)	0	0	98	0	18	0	0	4	0	0	6	0
Lane Group Flow (vph)	89	272	25	68	383	0	188	790	0	39	436	0
Turn Type	Perm		Perm	Perm			pm+pt			Perm		
Protected Phases		4			8		5	2			6	
Permitted Phases	4		4	8			2			6		
Actuated Green, G (s)	20.3	20.3	20.3	20.3	20.3		69.7	69.7		55.3	55.3	
Effective Green, g (s)	20.3	20.3	20.3	20.3	20.3		69.7	69.7		55.3	55.3	
Actuated g/C Ratio	0.20	0.20	0.20	0.20	0.20		0.70	0.70		0.55	0.55	
Clearance Time (s)	5.0	5.0	5.0	5.0	5.0		5.0	5.0		5.0	5.0	
Vehicle Extension (s)	3.0	3.0	3.0	3.0	3.0		3.0	3.0		3.0	3.0	
Lane Grp Cap (vph)	141	378	321	123	702		598	1272		346	999	
v/s Ratio Prot		c0.15			0.11		0.03	c0.43			0.24	
v/s Ratio Perm	0.13		0.02	0.11			0.19			0.06		
v/c Ratio	0.63	0.72	0.08	0.55	0.55		0.31	0.62		0.11	0.44	
Uniform Delay, d1	36.4	37.2	32.3	35.8	35.7		6.5	8.1		10.7	13.2	
Progression Factor	1.00	1.00	1.00	1.00	1.00		1.00	1.00		1.00	1.00	
Incremental Delay, d2	8.9	6.4	0.1	5.3	0.9		0.3	2.3		0.7	1.4	
Delay (s)	45.3	43.6	32.4	41.1	36.6		6.8	10.4		11.3	14.6	
Level of Service	D	D	C	D	D		A	B		B	B	
Approach Delay (s)		41.1			37.2			9.7			14.3	
Approach LOS		D			D			A			B	

Intersection Summary

HCM Average Control Delay	22.2	HCM Level of Service	C
HCM Volume to Capacity ratio	0.64		
Actuated Cycle Length (s)	100.0	Sum of lost time (s)	10.0
Intersection Capacity Utilization	81.5%	ICU Level of Service	D
Analysis Period (min)	15		

c Critical Lane Group

Movement	EBL	EBR	NBL	NBT	SBT	SBR
Lane Configurations						
Volume (vph)	78	308	418	754	360	65
Ideal Flow (vphpl)	1900	1900	1900	1900	1900	1900
Total Lost time (s)	5.0	4.0	4.0	5.0	5.0	
Lane Util. Factor	1.00	1.00	1.00	1.00	1.00	
Frt	1.00	0.85	1.00	1.00	0.98	
Flt Protected	0.95	1.00	0.95	1.00	1.00	
Satd. Flow (prot)	1770	1583	1770	1863	1824	
Flt Permitted	0.95	1.00	0.27	1.00	1.00	
Satd. Flow (perm)	1770	1583	500	1863	1824	
Peak-hour factor, PHF	0.92	0.92	0.92	0.92	0.92	0.92
Adj. Flow (vph)	85	335	454	820	391	71
RTOR Reduction (vph)	0	212	0	0	10	0
Lane Group Flow (vph)	85	123	454	820	452	0
Turn Type		pm+ov	pm+pt			
Protected Phases	4	5	5	2	6	
Permitted Phases		4	2			
Actuated Green, G (s)	6.7	19.0	34.9	34.9	18.6	
Effective Green, g (s)	6.7	19.0	34.9	34.9	18.6	
Actuated g/C Ratio	0.13	0.37	0.68	0.68	0.36	
Clearance Time (s)	5.0	4.0	4.0	5.0	5.0	
Vehicle Extension (s)	3.0	3.0	3.0	3.0	3.0	
Lane Grp Cap (vph)	230	583	641	1260	657	
v/s Ratio Prot	c0.05	0.05	c0.17	0.44	0.25	
v/s Ratio Perm		0.03	c0.31			
v/c Ratio	0.37	0.21	0.71	0.65	0.69	
Uniform Delay, d1	20.5	11.2	5.7	4.8	14.0	
Progression Factor	1.00	1.00	1.00	1.00	1.00	
Incremental Delay, d2	1.0	0.2	3.6	1.2	3.0	
Delay (s)	21.5	11.4	9.3	6.0	17.0	
Level of Service	C	B	A	A	B	
Approach Delay (s)	13.4			7.2	17.0	
Approach LOS	B			A	B	

Intersection Summary

HCM Average Control Delay	10.5	HCM Level of Service	B
HCM Volume to Capacity ratio	0.62		
Actuated Cycle Length (s)	51.6	Sum of lost time (s)	9.0
Intersection Capacity Utilization	62.0%	ICU Level of Service	B
Analysis Period (min)	15		

c Critical Lane Group

Movement	EBL	EBT	EBR	WBL	WBT	WBR	NBL	NBT	NBR	SBL	SBT	SBR
Lane Configurations												
Volume (vph)	189	608	143	156	661	382	178	722	129	186	318	177
Ideal Flow (vphpl)	1900	1900	1900	1900	1900	1900	1900	1900	1900	1900	1900	1900
Total Lost time (s)	5.0	5.0	5.0	5.0	5.0	5.0	4.0	5.0	5.0	4.0	5.0	5.0
Lane Util. Factor	1.00	0.95	1.00	0.91	0.91	1.00	1.00	0.95	1.00	1.00	0.95	1.00
Frt	1.00	1.00	0.85	1.00	1.00	0.85	1.00	1.00	0.85	1.00	1.00	0.85
Flt Protected	0.95	1.00	1.00	0.95	1.00	1.00	0.95	1.00	1.00	0.95	1.00	1.00
Satd. Flow (prot)	1770	3539	1583	1610	3386	1583	1770	3539	1583	1770	3539	1583
Flt Permitted	0.95	1.00	1.00	0.95	1.00	1.00	0.50	1.00	1.00	0.19	1.00	1.00
Satd. Flow (perm)	1770	3539	1583	1610	3386	1583	923	3539	1583	346	3539	1583
Peak-hour factor, PHF	0.92	0.92	0.92	0.92	0.92	0.92	0.92	0.92	0.92	0.92	0.92	0.92
Adj. Flow (vph)	205	661	155	170	718	415	193	785	140	202	346	192
RTOR Reduction (vph)	0	0	123	0	0	223	0	0	93	0	0	127
Lane Group Flow (vph)	205	661	32	153	735	192	193	785	47	202	346	65
Turn Type	Split		Perm	Split		Perm	pm+pt		Perm	pm+pt		Perm
Protected Phases	2	2		6	6		3	8		7	4	
Permitted Phases			2			6	8		8	4		4
Actuated Green, G (s)	25.0	25.0	25.0	25.0	25.0	25.0	50.6	40.0	40.0	51.4	40.4	40.4
Effective Green, g (s)	25.0	25.0	25.0	25.0	25.0	25.0	50.6	40.0	40.0	51.4	40.4	40.4
Actuated g/C Ratio	0.21	0.21	0.21	0.21	0.21	0.21	0.42	0.33	0.33	0.43	0.34	0.34
Clearance Time (s)	5.0	5.0	5.0	5.0	5.0	5.0	4.0	5.0	5.0	4.0	5.0	5.0
Vehicle Extension (s)	3.0	3.0	3.0	3.0	3.0	3.0	3.0	3.0	3.0	3.0	3.0	3.0
Lane Grp Cap (vph)	369	737	330	335	705	330	464	1180	528	279	1191	533
v/s Ratio Prot	0.12	c0.19		0.10	c0.22		0.04	0.22		c0.07	0.10	
v/s Ratio Perm			0.02			0.12	0.14		0.03	c0.24		0.04
v/c Ratio	0.56	0.90	0.10	0.46	1.04	0.58	0.42	0.67	0.09	0.72	0.29	0.12
Uniform Delay, d1	42.5	46.2	38.4	41.6	47.5	42.8	22.6	34.3	27.5	24.4	29.3	27.5
Progression Factor	1.00	1.00	1.00	1.00	1.00	1.00	1.00	1.00	1.00	1.00	1.00	1.00
Incremental Delay, d2	5.9	15.8	0.6	1.0	45.5	2.6	0.6	3.0	0.3	9.0	0.1	0.1
Delay (s)	48.4	62.1	39.0	42.5	93.0	45.4	23.2	37.2	27.8	33.3	29.4	27.6
Level of Service	D	E	D	D	F	D	C	D	C	C	C	C
Approach Delay (s)		55.8			71.9			33.6			30.0	
Approach LOS		E			E			C			C	

Intersection Summary

HCM Average Control Delay	50.3	HCM Level of Service	D
HCM Volume to Capacity ratio	0.81		
Actuated Cycle Length (s)	120.0	Sum of lost time (s)	14.0
Intersection Capacity Utilization	81.2%	ICU Level of Service	D
Analysis Period (min)	15		

c Critical Lane Group

Movement	EBL	EBT	EBR	WBL	WBT	WBR	NBL	NBT	NBR	SBL	SBT	SBR
Lane Configurations												
Volume (vph)	249	248	80	253	410	76	100	366	152	54	213	133
Ideal Flow (vphpl)	1900	1900	1900	1900	1900	1900	1900	1900	1900	1900	1900	1900
Total Lost time (s)	4.0	5.0		4.0	4.0	4.0	6.0	6.0		4.0	6.0	
Lane Util. Factor	1.00	1.00		1.00	1.00	1.00	1.00	0.95		1.00	0.95	
Frt	1.00	0.96		1.00	1.00	0.85	1.00	0.96		1.00	0.94	
Flt Protected	0.95	1.00		0.95	1.00	1.00	0.95	1.00		0.95	1.00	
Satd. Flow (prot)	1770	1795		1770	1863	1583	1770	3384		1770	3335	
Flt Permitted	0.14	1.00		0.30	1.00	1.00	0.53	1.00		0.33	1.00	
Satd. Flow (perm)	262	1795		565	1863	1583	984	3384		614	3335	
Peak-hour factor, PHF	0.92	0.92	0.92	0.92	0.92	0.92	0.92	0.92	0.92	0.92	0.92	0.92
Adj. Flow (vph)	271	270	87	275	446	83	109	398	165	59	232	145
RTOR Reduction (vph)	0	11	0	0	0	59	0	31	0	0	71	0
Lane Group Flow (vph)	271	346	0	275	446	24	109	532	0	59	306	0
Turn Type	pm+pt			custom		custom	Perm			pm+pt		
Protected Phases	7	4		3				2		1	6	
Permitted Phases	4			8	8	8	2			6		
Actuated Green, G (s)	49.1	34.4		48.7	34.7	34.7	46.0	46.0		56.6	56.6	
Effective Green, g (s)	49.1	34.4		48.7	34.7	34.7	46.0	46.0		56.6	56.6	
Actuated g/C Ratio	0.41	0.29		0.41	0.29	0.29	0.38	0.38		0.47	0.47	
Clearance Time (s)	4.0	5.0		4.0	4.0	4.0	6.0	6.0		4.0	6.0	
Vehicle Extension (s)	3.0	3.0		3.0	3.0	3.0	3.0	3.0		3.0	3.0	
Lane Grp Cap (vph)	292	515		370	539	458	377	1297		353	1573	
v/s Ratio Prot	c0.11	0.19		0.09				c0.16		0.01	c0.09	
v/s Ratio Perm	c0.27			0.21	0.24	0.02	0.11			0.07		
v/c Ratio	0.93	0.67		0.74	0.83	0.05	0.29	0.41		0.17	0.19	
Uniform Delay, d1	29.1	37.8		26.4	39.9	30.8	25.7	27.1		18.0	18.4	
Progression Factor	1.00	1.00		0.96	0.95	0.75	1.00	1.00		1.00	1.00	
Incremental Delay, d2	33.9	3.4		7.7	9.8	0.0	1.9	1.0		0.2	0.3	
Delay (s)	63.0	41.3		33.1	47.6	23.1	27.6	28.0		18.3	18.7	
Level of Service	E	D		C	D	C	C	C		B	B	
Approach Delay (s)		50.6			40.1			28.0			18.7	
Approach LOS		D			D			C			B	

Intersection Summary

HCM Average Control Delay	35.8	HCM Level of Service	D
HCM Volume to Capacity ratio	0.63		
Actuated Cycle Length (s)	120.0	Sum of lost time (s)	16.0
Intersection Capacity Utilization	68.7%	ICU Level of Service	C
Analysis Period (min)	15		

c Critical Lane Group

Movement	EBL	EBT	EBR	WBL	WBT	WBR	NBL	NBT	NBR	SBL	SBT	SBR
Lane Configurations												
Volume (vph)	18	0	18	83	1	105	32	467	173	74	232	31
Ideal Flow (vphpl)	1900	1900	1900	1900	1900	1900	1900	1900	1900	1900	1900	1900
Total Lost time (s)		5.0			5.0	5.0		5.0	5.0		5.0	5.0
Lane Util. Factor		1.00			1.00	1.00		1.00	1.00		1.00	1.00
Frt		0.93			1.00	0.85		1.00	0.85		1.00	0.85
Flt Protected		0.98			0.95	1.00		1.00	1.00		0.99	1.00
Satd. Flow (prot)		1695			1775	1583		1857	1583		1841	1583
Flt Permitted		0.82			0.79	1.00		0.96	1.00		0.79	1.00
Satd. Flow (perm)		1425			1477	1583		1792	1583		1464	1583
Peak-hour factor, PHF	0.92	0.92	0.92	0.92	0.92	0.92	0.92	0.92	0.92	0.92	0.92	0.92
Adj. Flow (vph)	20	0	20	90	1	114	35	508	188	80	252	34
RTOR Reduction (vph)	0	18	0	0	0	102	0	0	36	0	0	6
Lane Group Flow (vph)	0	22	0	0	91	12	0	543	152	0	332	28
Turn Type	Perm			Perm		Perm	Perm		Perm	Perm		Perm
Protected Phases		4			8			2			6	
Permitted Phases	4			8		8	2		2	6		6
Actuated Green, G (s)		12.8			12.8	12.8		97.2	97.2		97.2	97.2
Effective Green, g (s)		12.8			12.8	12.8		97.2	97.2		97.2	97.2
Actuated g/C Ratio		0.11			0.11	0.11		0.81	0.81		0.81	0.81
Clearance Time (s)		5.0			5.0	5.0		5.0	5.0		5.0	5.0
Vehicle Extension (s)		3.0			3.0	3.0		3.0	3.0		3.0	3.0
Lane Grp Cap (vph)		152			158	169		1452	1282		1186	1282
v/s Ratio Prot												
v/s Ratio Perm		0.02			c0.06	0.01		c0.30	0.10		0.23	0.02
v/c Ratio		0.15			0.58	0.07		0.37	0.12		0.28	0.02
Uniform Delay, d1		48.6			51.0	48.3		3.1	2.4		2.8	2.2
Progression Factor		1.00			1.00	1.00		1.00	1.00		1.38	2.41
Incremental Delay, d2		0.4			5.0	0.2		0.7	0.2		0.1	0.0
Delay (s)		49.1			56.0	48.4		3.8	2.6		4.0	5.3
Level of Service		D			E	D		A	A		A	A
Approach Delay (s)		49.1			51.8			3.5			4.1	
Approach LOS		D			D			A			A	

Intersection Summary

HCM Average Control Delay	12.4	HCM Level of Service	B
HCM Volume to Capacity ratio	0.40		
Actuated Cycle Length (s)	120.0	Sum of lost time (s)	10.0
Intersection Capacity Utilization	63.9%	ICU Level of Service	B
Analysis Period (min)	15		

c Critical Lane Group

Movement	EBL	EBR	NBL	NBT	SBT	SBR
Lane Configurations						
Volume (veh/h)	12	34	36	749	343	10
Sign Control	Stop			Free	Free	
Grade	0%			0%	0%	
Peak Hour Factor	0.92	0.92	0.92	0.92	0.92	0.92
Hourly flow rate (vph)	13	37	39	814	373	11
Pedestrians				45	9	
Lane Width (ft)				12.0	12.0	
Walking Speed (ft/s)				4.0	4.0	
Percent Blockage				4	1	
Right turn flare (veh)						
Median type				None	None	
Median storage veh)						
Upstream signal (ft)						
pX, platoon unblocked						
vC, conflicting volume	1274	418	384			
vC1, stage 1 conf vol						
vC2, stage 2 conf vol						
vCu, unblocked vol	1274	418	384			
tC, single (s)	6.4	6.2	4.1			
tC, 2 stage (s)						
tF (s)	3.5	3.3	2.2			
p0 queue free %	93	94	97			
cM capacity (veh/h)	177	611	1175			

Direction, Lane #	EB 1	NB 1	SB 1	SB 2
Volume Total	50	853	373	11
Volume Left	13	39	0	0
Volume Right	37	0	0	11
cSH	373	1175	1700	1700
Volume to Capacity	0.13	0.03	0.22	0.01
Queue Length 95th (ft)	11	3	0	0
Control Delay (s)	16.2	0.9	0.0	0.0
Lane LOS	C	A		
Approach Delay (s)	16.2	0.9	0.0	
Approach LOS	C			

Intersection Summary			
Average Delay	1.2		
Intersection Capacity Utilization	81.0%	ICU Level of Service	D
Analysis Period (min)	15		

Movement	EBL	EBT	EBR	WBL	WBT	WBR	NBL	NBT	NBR	SBL	SBT	SBR
Lane Configurations												
Volume (vph)	9	0	21	110	5	48	32	1145	54	14	591	12
Ideal Flow (vphpl)	1900	1900	1900	1900	1900	1900	1900	1900	1900	1900	1900	1900
Total Lost time (s)		5.0		5.0	5.0		5.0	5.0		5.0	5.0	
Lane Util. Factor		1.00		1.00	1.00		1.00	0.95		1.00	0.95	
Frt		0.91		1.00	0.86		1.00	0.99		1.00	1.00	
Flt Protected		0.99		0.95	1.00		0.95	1.00		0.95	1.00	
Satd. Flow (prot)		1662		1770	1608		1770	3515		1770	3529	
Flt Permitted		0.92		0.74	1.00		0.40	1.00		0.17	1.00	
Satd. Flow (perm)		1545		1370	1608		750	3515		310	3529	
Peak-hour factor, PHF	0.92	0.92	0.92	0.92	0.92	0.92	0.92	0.92	0.92	0.92	0.92	0.92
Adj. Flow (vph)	10	0	23	120	5	52	35	1245	59	15	642	13
RTOR Reduction (vph)	0	20	0	0	46	0	0	2	0	0	1	0
Lane Group Flow (vph)	0	13	0	120	11	0	35	1302	0	15	654	0
Turn Type	Perm			Perm			Perm			pm+pt		
Protected Phases		4			8			2		1	6	
Permitted Phases	4			8			2			6		
Actuated Green, G (s)		14.8		14.8	14.8		88.8	88.8		96.2	96.2	
Effective Green, g (s)		14.8		14.8	14.8		88.8	88.8		96.2	96.2	
Actuated g/C Ratio		0.12		0.12	0.12		0.73	0.73		0.80	0.80	
Clearance Time (s)		5.0		5.0	5.0		5.0	5.0		5.0	5.0	
Vehicle Extension (s)		3.0		3.0	3.0		3.0	3.0		3.0	3.0	
Lane Grp Cap (vph)		189		168	197		550	2580		275	2806	
v/s Ratio Prot					0.01			c0.37		0.00	c0.19	
v/s Ratio Perm		0.01		c0.09			0.05			0.04		
v/c Ratio		0.07		0.71	0.06		0.06	0.50		0.05	0.23	
Uniform Delay, d1		47.0		51.1	46.9		4.5	6.8		4.3	3.1	
Progression Factor		1.00		1.00	1.00		1.00	1.00		1.00	1.00	
Incremental Delay, d2		0.2		13.4	0.1		0.2	0.7		0.1	0.2	
Delay (s)		47.1		64.5	47.1		4.7	7.5		4.3	3.3	
Level of Service		D		E	D		A	A		A	A	
Approach Delay (s)		47.1			58.9			7.4			3.3	
Approach LOS		D			E			A			A	

Intersection Summary

HCM Average Control Delay	10.9	HCM Level of Service	B
HCM Volume to Capacity ratio	0.53		
Actuated Cycle Length (s)	121.0	Sum of lost time (s)	15.0
Intersection Capacity Utilization	54.5%	ICU Level of Service	A
Analysis Period (min)	15		

c Critical Lane Group

APPENDIX

D

AASHTO Stopping Sight Distance and Intersection Sight Distance Criteria

AASHTO Intersection Sight Distance Requirements

Intersection sight distance (ISD) is a measure of the distance a stopped vehicle can view vehicles approaching from the intersecting highway. This sight distance is required to avoid collisions when making a turning maneuver from a side street. A field survey was performed to analyze existing conditions with regard to ISD and was measured from the most probable vehicle stopping position on the side street. The analysis was conducted to determine whether or not sight distances are within the recommended standards set by AASHTO as defined in the 2004 ***A Policy on Geometric Design of Highways and Streets***. The table below compares the ISD requirements for various design speeds and intersection maneuvers. At this unsignalized intersection Condition B1, B2, and F must be considered.

Design Speed	Condition A	Condition B1	Condition B2	Condition B3	Condition C1	Condition C2	Condition F
20 mph	90 FT	225 FT	195 FT	195 FT	195 FT	240 FT	165 FT
25 mph	115 FT	280 FT	240 FT	240 FT	240 FT	295 FT	205 FT
30 mph	140 FT	335 FT	290 FT	290 FT	290 FT	355 FT	245 FT
35 mph	165 FT	390 FT	335 FT	335 FT	335 FT	415 FT	285 FT
40 mph	195 FT	**445 FT**	385 FT	385 FT	385 FT	475 FT	325 FT
45 mph	220 FT	500 FT	430 FT	430 FT	430 FT	530 FT	365 FT
50 mph	245 FT	555 FT	480 FT	480 FT	480 FT	590 FT	405 FT
55 mph	285 FT	610 FT	530 FT	530 FT	530 FT	650 FT	445 FT
60 mph	325 FT	665 FT	575 FT	575 FT	575 FT	710 FT	490 FT
65 mph	365 FT	720 FT	625 FT	625 FT	625 FT	765 FT	530 FT
70 mph	405 FT	775 FT	670 FT	670 FT	670 FT	825 FT	570 FT
75 mph	445 FT	830 FT	720 FT	720 FT	720 FT	885 FT	610 FT

Condition A: *Length of sight triangle for intersection with no traffic control.*

Condition B1: *Intersection sight distance for a stopped passenger car to turn left from the minor street onto a two-lane highway with no median.*

Condition B2: *Intersection sight distance for a stopped passenger car to turn right from the minor street onto a two-lane highway with no median.*

Condition B3: *Intersection sight distance for a stopped passenger car making a crossing maneuver from the minor road.*

Condition C1: *Length of sight triangle leg along major road for a crossing maneuver from yield-controlled approaches.*

Condition C2: *Intersection sight distance for a left or right turn from yield-controlled intersections.*

Condition F: *Intersection sight distance for a left turn from a major road.*

AASHTO Stopping Sight Distance Requirements

Stopping sight distance (SSD) is a measure of the available length of roadway visible to a driver. According to AASHTO, as defined in the 2004 ***A Policy on Geometric Design of Highways and Streets***, stopping sight distance should be sufficient to enable a vehicle to stop before reaching some stationary object in its path. This SSD is the sum of the distance traveled during reaction time and the braking distance required to stop before striking an object. SSD is critical at the intersection due to the crest curve. The table below contains recommended stopping sight distances for level terrain, downgrades, and upgrades.

Design Speed	Level Terrain	Downgrades		Upgrades	
		3%	6%	3%	6%
20 mph	115 FT	116 FT	120 FT	109 FT	107 FT
25 mph	155 FT	158 FT	165 FT	147 FT	143 FT
30 mph	200 FT	205 FT	215 FT	200 FT	184 FT
35 mph	250 FT	257 FT	271 FT	237 FT	229 FT
40 mph	305 FT	315 FT	333 FT	289 FT	278 FT
45 mph	360 FT	378 FT	400 FT	344 FT	331 FT
50 mph	425 FT	446 FT	474 FT	405 FT	388 FT
55 mph	495 FT	520 FT	553 FT	469 FT	450 FT
60 mph	570 FT	598 FT	638 FT	538 FT	515 FT
65 mph	645 FT	682 FT	728 FT	612 FT	584 FT
70 mph	730 FT	771 FT	825 FT	690 FT	658 FT
75 mph	820 FT	866 FT	927 FT	772 FT	736 FT

APPENDIX

E

Background Development Information

SITE TRAFFIC ANALYSIS

The Rickman Property is proposed to be developed with 127,700 s.f. of warehouse use. Access to the site, which currently has a vacant building on-site, will be provided via two existing full movement access points onto MD 124.

Trip Generation Analysis

Trip generation rates from the Institute of Transportation Engineer's publication Trip Generation, Eight Edition. The trip generation rates and trips generated by this use are shown in Table 3.

TABLE 3
TRIP GENERATION
RICKMAN PROPERTY

LAND USE	MORNING PEAK HOUR			EVENING PEAK HOUR		
	IN	OUT	TOTAL	IN	OUT	TOTAL
Generation Rate						
Warehouse (150)						
Trips/1,000 s.f.	Ln(T)=0.55Ln(X)+1.88			Ln(T)=0.64Ln(X)+1.14		
Trips/127,700 s.f.	74	20	94	17	53	70

The trips generated by the proposed use were assigned to the road network as shown in Exhibit 6. Since Airpark Road and MD 115 both serve generally the same area, it was assumed that motorists exiting the site would be more inclined to turn right when exiting the site as opposed to waiting for a gap to turn left. This is reflected in the trip distribution percentages for Airpark Road and MD 115. The site generated volumes were combined with the Background Traffic Volumes to yield the Total Traffic Volumes as shown on Exhibit 7.

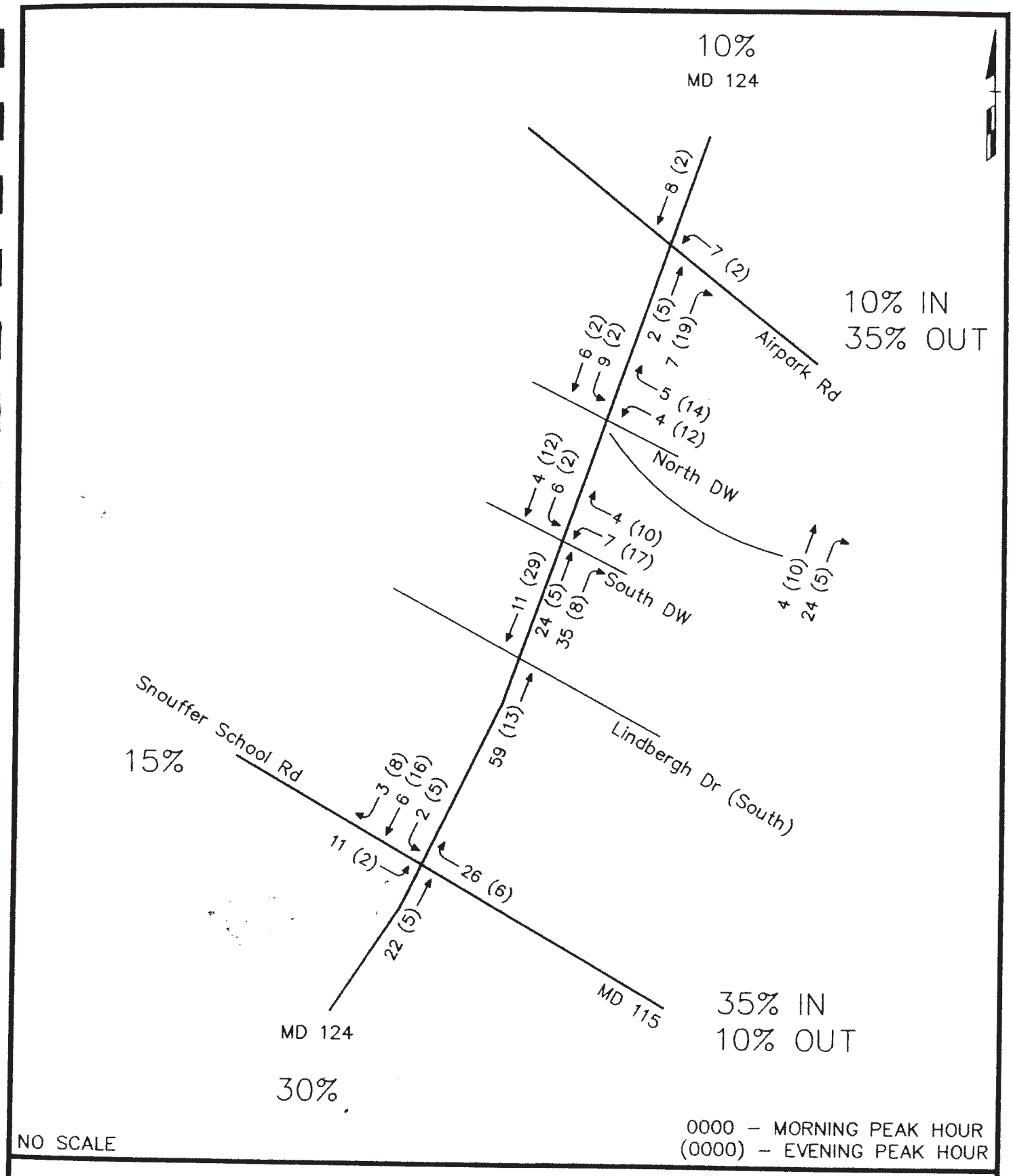

EXHIBIT 6
SITE GENERATED TRIPS

Transportation Management Requirements

The subject site is located outside the boundary of the Greater Shady Grove Transportation Management District (TMD) and, thus, has no transportation management requirements.

Local Area Transportation Review

The table below shows that the number of new and total peak-hour trips generated by the previous-approved and proposed development plan amendments within the weekday morning peak period (6:30 to 9:30 a.m.) and the evening peak period (4:00 to 7:00 p.m.). The total trips include new, diverted, and pass-by trips. Pass-by and diverted trips refer to those trips that only stop at the subject site on the way from other origins or to other destinations.

Proposed Types of Land Use	Additional Square Feet	Additional Weekday Peak-Hour Vehicular Trips			
		Morning		Evening	
		New	Total	New	Total
Additional Land Uses by the Previously-Approved DPA-07-2					
General Office Use	59,300	93	93	105	105
Health/Fitness Club	3,500	5	5	12	12
High Turnover Restaurant	3,200	21	37	20	36
Total Additional Square Feet and Trips	66,000	119	135	117	152
Changes in the Additional Land Use by the Proposed DPA-09-3					
General Office Use	47,300	72	72	88	88
Health/Fitness Club	3,500	5	5	12	12
High Turnover Restaurant	7,520	49	87	48	84
Total Additional Square Feet and Trips	58,320	126	164	148	184
Difference between Previously-Approved DPA and Proposed DPA	-7,680	+7	+29	+31	+32

A traffic study was submitted for the previous-approved DPA-07-2 in 2007 to meet the LATR requirements because the existing and proposed additional land uses generate 30 or more peak-hour trips during the weekday morning and evening peak hours. Based on the 2007 traffic study, the Critical Lane Volumes (CLV) values at the nearby analyzed intersections are shown on the attached table. At the two intersections with the highest CLV values in the total traffic condition over 1,400, a current CLV values based on 2009 traffic counts are compared with the CLV in 2007 below:

Plan Number	Approval Date	Project Name	Traffic Zone	Approved Residential Units by Type				Remaining Residential Units by Type			
				Detached Single Family	*Town-house*	*Multi-family*	***Total***	*Detached Single Family*	*Town-house*	*Multi-family*	***Total***
Subtotal				**517**	**446**	**45**	**1,008**	**512**	**412**	**9**	**933**
MONTGOMERY VILLAGE / MONTGOMERY AIRPARK											
120060280	6/28/2007	Meadowvale	204	9	0	0	9	9	0	0	9
120061220	9/20/2007	Strawberry Knolls	204	11	0	0	11	11	0	0	11

Name: **Strawberry Knolls**
Type: **Single Family Residential**
Dwelling Units **11**

ITE Trip Generation

AM Peak Hour Trips - ITE Land Use Code 210, pg 291

Average Rate	T=0.75(X)	8
Equation	T=0.70(X)+9.74	17
Trips - Highest Number of Trips		17

PM Peak Hour Trips - ITE Land Use Code 210, pg 292

Average Rate	T=1.01(X)	11
Equation	Ln(T)=0.90 Ln(X)+0.51	14
Trips - Highest Number of Trips		14

	ITE Generated Peak Hour Driveway Volumes				
	Total	IN		OUT	
AM	17	25.0%	4	75%	13
PM	14	63.0%	9	37%	5

LATR Trip Generation

Peak Hour Trips	Equation	
AM	T=0.95(X)	10
PM	T=1.11(X)	12

	LATR Generated Peak Hour Driveway Volumes				
	Total	IN		OUT	
AM	10	25.0%	3	75%	8
PM	12	63.0%	8	37%	5

Name: **Meadowvale**
Type: **Single Family Residential**
Dwelling Units **9**

ITE Trip Generation

AM Peak Hour Trips - ITE Land Use Code 210, pg 291

Average Rate	T=0.75(X)	7
Equation	T=0.70(X)+9.74	16
Trips - Highest Number of Trips		16

PM Peak Hour Trips - ITE Land Use Code 210, pg 292

Average Rate	T=1.01(X)	9
Equation	Ln(T)=0.90 Ln(X)+0.51	12
Trips - Highest Number of Trips		12

	ITE Generated Peak Hour Driveway Volumes				
	Total	IN		OUT	
AM	16	25.0%	4	75%	12
PM	12	63.0%	8	37%	4

LATR Trip Generation

Peak Hour Trips	Equation	
AM	T=0.95(X)	9
PM	T=1.11(X)	10

	LATR Generated Peak Hour Driveway Volumes				
	Total	IN		OUT	
AM	9	25.0%	2	75%	6
PM	10	63.0%	6	37%	4

MORNING PEAK HOUR			EVENING PEAK HOUR		
IN	OUT	TOTAL	IN	OUT	TOTAL
5	4	9	18	17	35
IN/OUT %		53/47	IN/OUT %		51/49

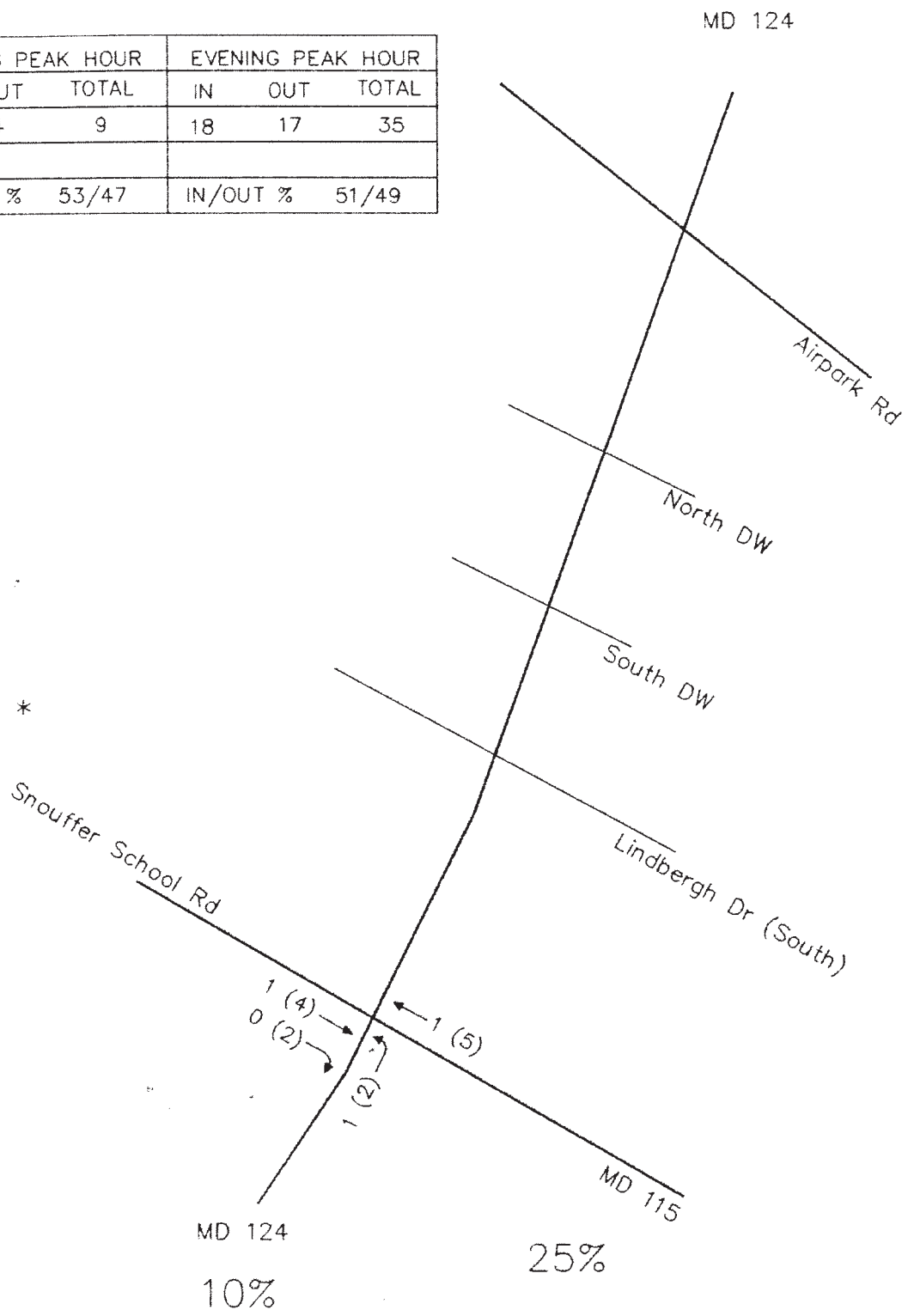

NO SCALE

0000 – MORNING PEAK HOUR
(0000) – EVENING PEAK HOUR

Trips Generated by Centerway Plaza, Lot 2

Total Future Traffic Forecasts

The site-generated traffic volumes shown in Table 3, were assigned to the network as shown in Figure 8, then added to the background traffic forecasts shown on Figure 7 to produce the total future traffic forecasts depicted on Figure 9.

Total Future Critical Lane Volumes

Total future intersection critical lane volumes were calculated based on: (1) the total future traffic forecasts shown on Figure 9, (2) the existing lane use and traffic controls shown on Figure 3, and (3) the critical lane volume analysis technique. The results are presented in Appendix G and summarized in Table 2.

Table 2 indicates that the proposed site will have minimal traffic impacts to the surround roadways. Three (3) of the five (5) key off-site intersections will continue to operate at acceptable CLV's during both the AM and PM peak hours. The intersection of Goshen Road/Wightman Road/Snouffer School Road will continue to operate at an unacceptable CLV of 1,746 during the AM peak hour and an unacceptable CLV of 1,536 during the PM peak hour. The intersection of Snouffer School Road/Centerway Road will operate at an unacceptable CLV of 1,707 during the AM peak hour and an acceptable CLV of 1,148 during the PM peak hour.

To mitigate the trips generated by the BP Amoco station, the Snouffer School Road/Centerway Road intersection will need to add southbound left and right turn lanes. The installation of a new traffic signal has been approved at this intersection. When installed, the signal will include a signal head for the driveway of the proposed BP Amoco station.

Table 3-2
Montgomery Village Marketplace
Site Trip Generation Analysis (1)

Land Use	Amount	Units	AM Peak Hour In	AM Peak Hour Out	AM Peak Hour Total	PM Peak Hour In	PM Peak Hour Out	PM Peak Hour Total
General Retail	26,000	S.F.	25	23	48	100	93	193
Diverted-Link Trip Reduction (2)	25%		-	-	-	(25)	(23)	(48)
Total Retail Trips:			25	23	48	75	70	145
Existing Driveway Counts (YMCA) (3)			7	9	16	6	3	9
Net New Site Trips:			**18**	**14**	**32**	**69**	**67**	**136**

Notes: (1) Based on 2008 Maryland-National Capital Park and Planning Commission Local Area Transportation Review Guidelines

(2) Based on information published in the ITE's Trip Generation Handbook, March 2001.

(3) Based on Driveway Counts Conducted by Wells + Associates on October 4, 2007

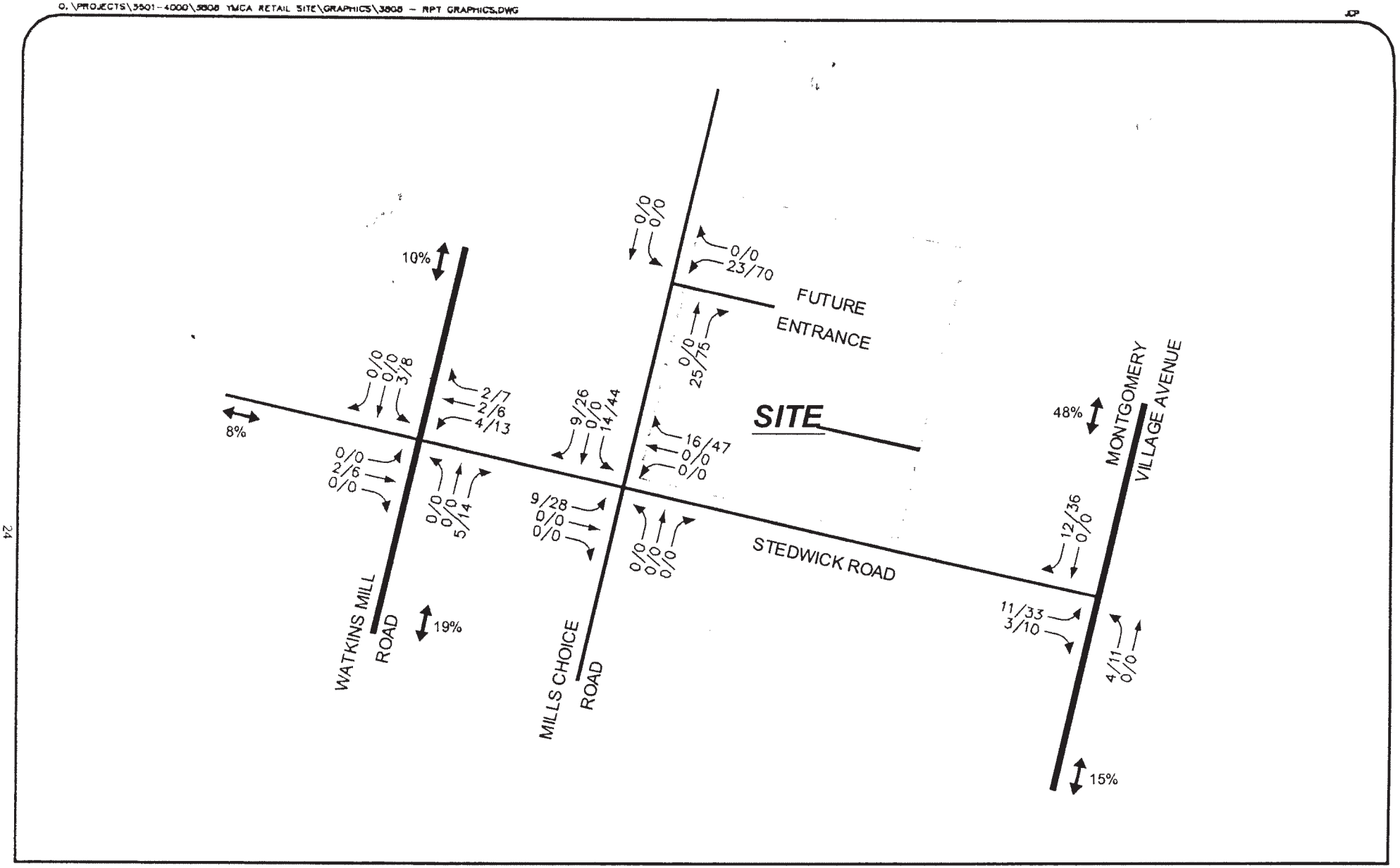

Figure 3-4
New Site-Generated Retail Trips and Directional Distributions

APPENDIX

F

Background CLV Analysis Worksheets
Background Synchro/SimTraffic Analysis Worksheets

Critical Lane Volume Methodology
Turning Movement Summary and Level of Service

Prepared by: **STV Inc.**

Count Date: 3/31/2009
Conditions: Background
Design Year: 2012

Location: Snouffer School Road at MD 124 (Woodfield Road)
Computed by: MMO
Date 11/17/2009

Morning Peak Hour: 7:30-8:30 AM

Evening Peak Hour: 4:45-5:45 PM

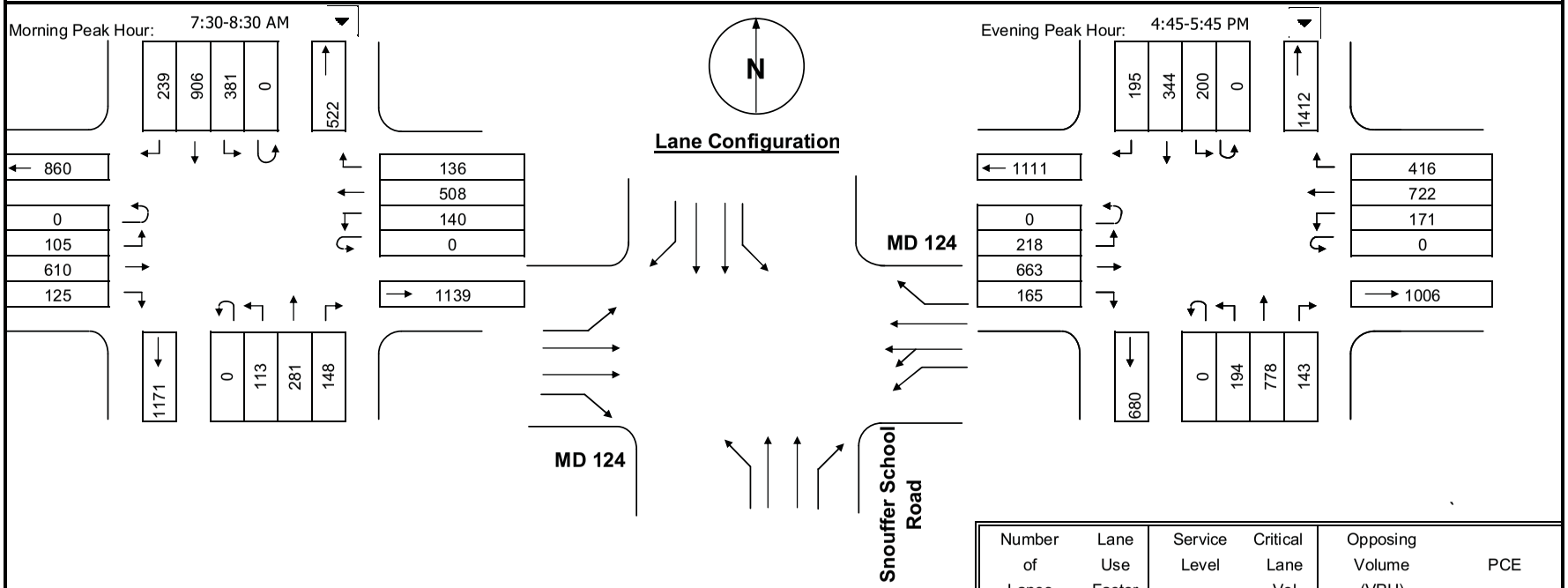

Number of Lanes	Lane Use Factor	Service Level	Critical Lane Vol	Opposing Volume (VPH)	PCE
1 =	1.00	A	<= 1000	<= 199	1.1
2 =	0.53	B	<= 1150	<= 599	2.0
3 =	0.37	C	<= 1300	<= 799	3.0
4 =	0.30	D	<= 1450	<= 999	4.0
5 =	0.25	E	<= 1600	> 1000	5.0
		F	> 1600		

Phasing

RTOR/Overlap
- ☐ Northbound
- ☐ Southbound
- ☐ Eastbound
- ☐ Westbound

Split Phasing
- ◉ East/West
- ○ North/South
- ○ None

Inx. Control
- ◉ Signal
- ○ Stop

Phase	Movement	Volume 1	Lane Use Factor - 2	Lane volume 1 X 2	Opposing Movement	Critical In. volume	*	Phase	Movement	Volume 1	Lane Use Factor - 2	Lane volume 1 X 2	Opposing Movement	Critical In. Volume	*
	NB	281	0.53	149	381	530			NB	778	0.53	412	200	612	*
	SB	906	0.53	480	113	593	*		SB	344	0.53	182	194	376	
	EB	610	0.53	323	0	323	*		EB	663	0.53	351	0	351	*
	WB	648	0.40	259	0	259	*		WB	893	0.40	357	0	357	*
Remarks:			* Critical volume		Total	**1176**		Remarks:			* Critical volume		Total	**1321**	
						0.73	**C**							**0.83**	**D**

Critical Lane Volume Methodology
Turning Movement Summary and Level of Service

Prepared by: **STV Inc.**

Count Date: 10/1/2009
Conditions: Background
Design Year: 2012

Location: Snouffer School Road at Mooney Drive
Computed by: MMO
Date 11/17/2009

Morning Peak Hour: 7:15-8:15 AM

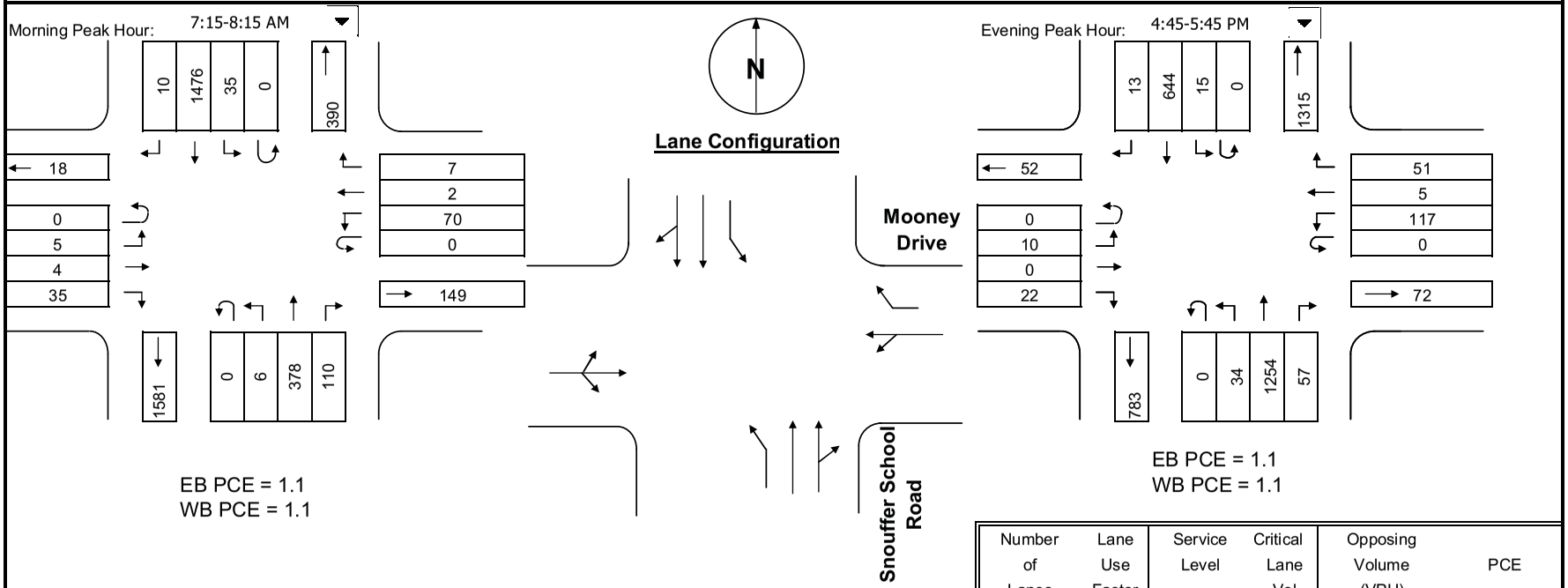

Number of Lanes	Lane Use Factor	Service Level	Critical Lane Vol	Opposing Volume (VPH)	PCE
1 = 1.00		A <= 1000		<= 199	1.1
2 = 0.53		B <= 1150		<= 599	2.0
3 = 0.37		C <= 1300		<= 799	3.0
4 = 0.30		D <= 1450		<= 999	4.0
5 = 0.25		E <= 1600		> 1000	5.0
		F > 1600			

Phasing

RTOR/Overlap
- ☐ Northbound
- ☐ Southbound
- ☐ Eastbound
- ☐ Westbound

Split Phasing
- ○ East/West
- ○ North/South
- ◉ None

Inx. Control
- ◉ Signal
- ○ Stop

Phase	Movement	Volume 1	Lane Use Factor - 2	Lane volume 1 X 2	Opposing Movement	Critical In. volume	*	Phase	Movement	Volume 1	Lane Use Factor - 2	Lane volume 1 X 2	Opposing Movement	Critical In. Volume	*
	NB	488	0.53	259	35	294			NB	1311	0.53	695	15	710	*
	SB	1486	0.53	788	6	794	*		SB	657	0.53	348	34	382	
	EB	45	1.00	45	70	115	*		EB	33	1.00	33	117	150	*
	WB	79	1.00	79	5	84			WB	134	1.00	134	10	144	
Remarks:			* Critical volume		Total	**908**		Remarks:			* Critical volume		Total	**860**	
						0.57	**A**							**0.54**	**A**

Critical Lane Volume Methodology
Turning Movement Summary and Level of Service

Prepared by: **STV Inc.**

Count Date: 2/26/2009
Conditions: Background
Design Year: 2012

Location: Snouffer School Road at Centerway Road
Computed by: MMO
Date 11/17/2009

Morning Peak Hour: 7:00-8:00 AM

Evening Peak Hour: 5:00-6:00 PM

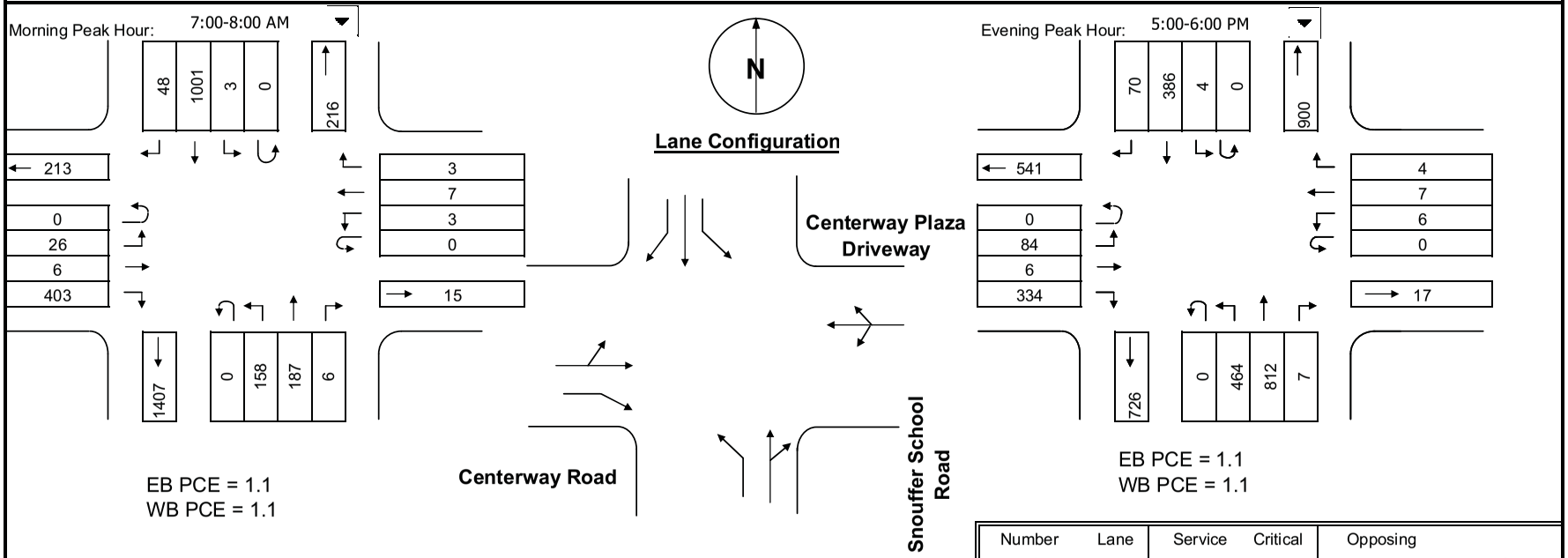

EB PCE = 1.1
WB PCE = 1.1

EB PCE = 1.1
WB PCE = 1.1

Number of Lanes	Lane Use Factor	Service Level	Critical Lane Vol	Opposing Volume (VPH)	PCE
1 = 1.00		A <= 1000		<= 199	1.1
2 = 0.53		B <= 1150		<= 599	2.0
3 = 0.37		C <= 1300		<= 799	3.0
4 = 0.30		D <= 1450		<= 999	4.0
5 = 0.25		E <= 1600		> 1000	5.0
		F > 1600			

Phasing

RTOR/Overlap
- ☐ Northbound
- ☐ Southbound
- ☑ Eastbound
- ☐ Westbound

Split Phasing
- ○ East/West
- ○ North/South
- ◉ None

Inx. Control
- ◉ Signal
- ○ Stop

Phase	Movement	Volume 1	Lane Use Factor - 2	Lane volume 1 X 2	Opposing Movement	Critical In. volume	*	Phase	Movement	Volume 1	Lane Use Factor - 2	Lane volume 1 X 2	Opposing Movement	Critical In. Volume	*
	NB	193	1.00	193	3	196			NB	819	1.00	819	4	823	
	SB	1001	1.00	1001	158	1159	*		SB	386	1.00	386	464	850	*
	EB	245	1.00	245	3	248	*		EB	98	1.00	98	6	104	*
	WB	13	1.00	13	26	39			WB	18	1.00	18	84	102	
Remarks:			* Critical volume		Total	**1407**		Remarks:			* Critical volume		Total	**954**	
EB = EBR (403) - WBL (158)						**0.88**	**D**							**0.60**	**A**

Critical Lane Volume Methodology
Turning Movement Summary and Level of Service

Prepared by: **STV Inc.**

Count Date: 10/6/2009
Conditions: Background
Design Year: 2012

Location: Snouffer School Road at Alliston Hollow Way
Computed by: MMO
Date 11/17/2009

Morning Peak Hour: 6:45-7:45 AM

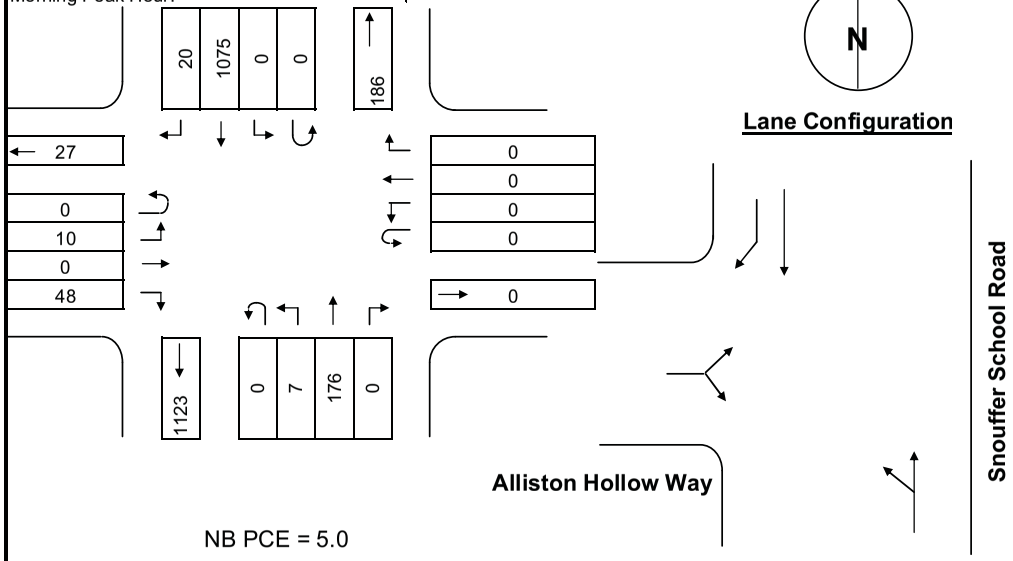

NB PCE = 5.0

Evening Peak Hour: 5:00-6:00 PM

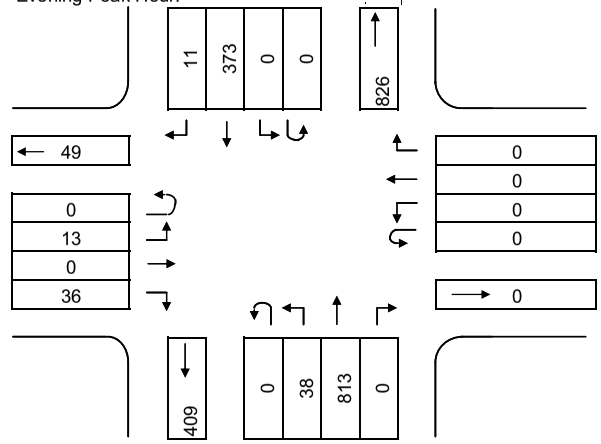

NB PCE = 2.0

Number of Lanes	Lane Use Factor	Service Level	Critical Lane Vol	Opposing Volume (VPH)	PCE
1 = 1.00		A <= 1000		<= 199	1.1
2 = 0.53		B <= 1150		<= 599	2.0
3 = 0.37		C <= 1300		<= 799	3.0
4 = 0.30		D <= 1450		<= 999	4.0
5 = 0.25		E <= 1600		> 1000	5.0
		F > 1600			

Phasing

RTOR/Overlap
- ☐ Northbound
- ☐ Southbound
- ☐ Eastbound
- ☐ Westbound

Split Phasing
- ○ East/West
- ○ North/South
- ◉ None

Inx. Control
- ○ Signal
- ◉ Stop

Phase	Movement	Volume 1	Lane Use Factor - 2	Lane volume 1 X 2	Opposing Movement	Critical In. volume	*	Phase	Movement	Volume 1	Lane Use Factor - 2	Lane volume 1 X 2	Opposing Movement	Critical In. Volume	*
	NB	211	1.00	211	0	211			NB	889	1.00	889	0	889	*
	SB	1075	1.00	1075	7	1082	*		SB	373	1.00	373	38	411	
	EB	58	1.00	58	0	58	*		EB	49	1.00	49	0	49	*
Remarks:			* Critical volume		Total	**1140**		Remarks:			* Critical volume		Total	**938**	
						0.71	**B**							**0.59**	**A**

Critical Lane Volume Methodology
Turning Movement Summary and Level of Service

Prepared by: **STV Inc.**

Count Date: 10/6/2009
Conditions: Background
Design Year: 2012

Location: Snouffer School Road at Lewisberry Drive
Computed by: MMO
Date 11/17/2009

Morning Peak Hour: 7:00-8:00 AM

Evening Peak Hour: 5:00-6:00 PM

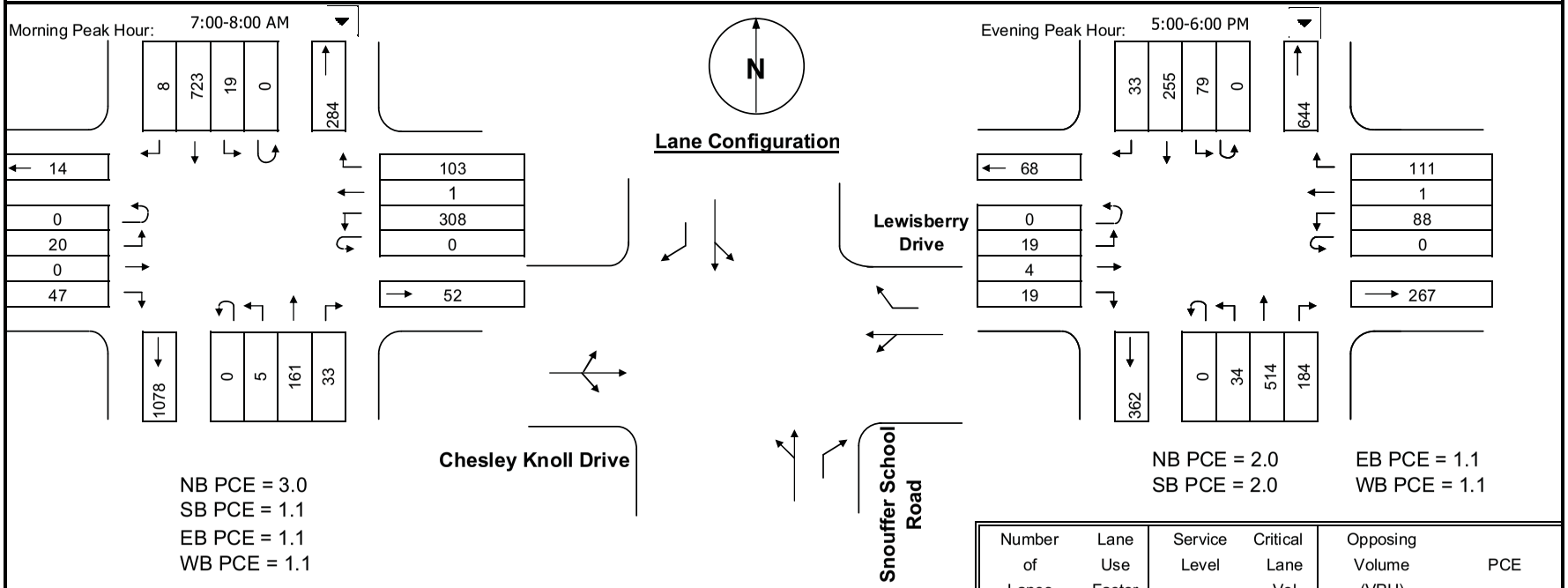

Number of Lanes	Lane Use Factor	Service Level	Critical Lane Vol	Opposing Volume (VPH)	PCE
1 = 1.00		A <= 1000		<= 199	1.1
2 = 0.53		B <= 1150		<= 599	2.0
3 = 0.37		C <= 1300		<= 799	3.0
4 = 0.30		D <= 1450		<= 999	4.0
5 = 0.25		E <= 1600		> 1000	5.0
		F > 1600			

Phasing

RTOR/Overlap
- ☐ Northbound
- ☐ Southbound
- ☐ Eastbound
- ☐ Westbound

Split Phasing
- ○ East/West
- ○ North/South
- ◉ None

Inx. Control
- ◉ Signal
- ○ Stop

Phase	Movement	Volume 1	Lane Use Factor - 2	Lane volume 1 X 2	Opposing Movement	Critical In. volume	*	Phase	Movement	Volume 1	Lane Use Factor - 2	Lane volume 1 X 2	Opposing Movement	Critical In. Volume	*
	NB	176	1.00	176	19	195			NB	582	1.00	582	79	661	*
	SB	744	1.00	744	5	749	*		SB	413	1.00	413	34	447	
	EB	69	1.00	69	308	377	*		EB	44	1.00	44	88	132	*
	WB	340	1.00	340	20	360			WB	98	1.00	98	19	117	
Remarks:			* Critical volume		Total	**1126**		Remarks:			* Critical volume		Total	**793**	
						0.70	**B**							**0.50**	**A**

Critical Lane Volume Methodology
Turning Movement Summary and Level of Service

Prepared by: **STV Inc.**

Count Date: 10/1/2009
Conditions: Background
Design Year: 2012

Location: Snouffer School Road at Goshen Road
Computed by: MMO
Date 11/17/2009

Morning Peak Hour: 6:45-7:45 AM

Evening Peak Hour: 5:00-6:00 PM

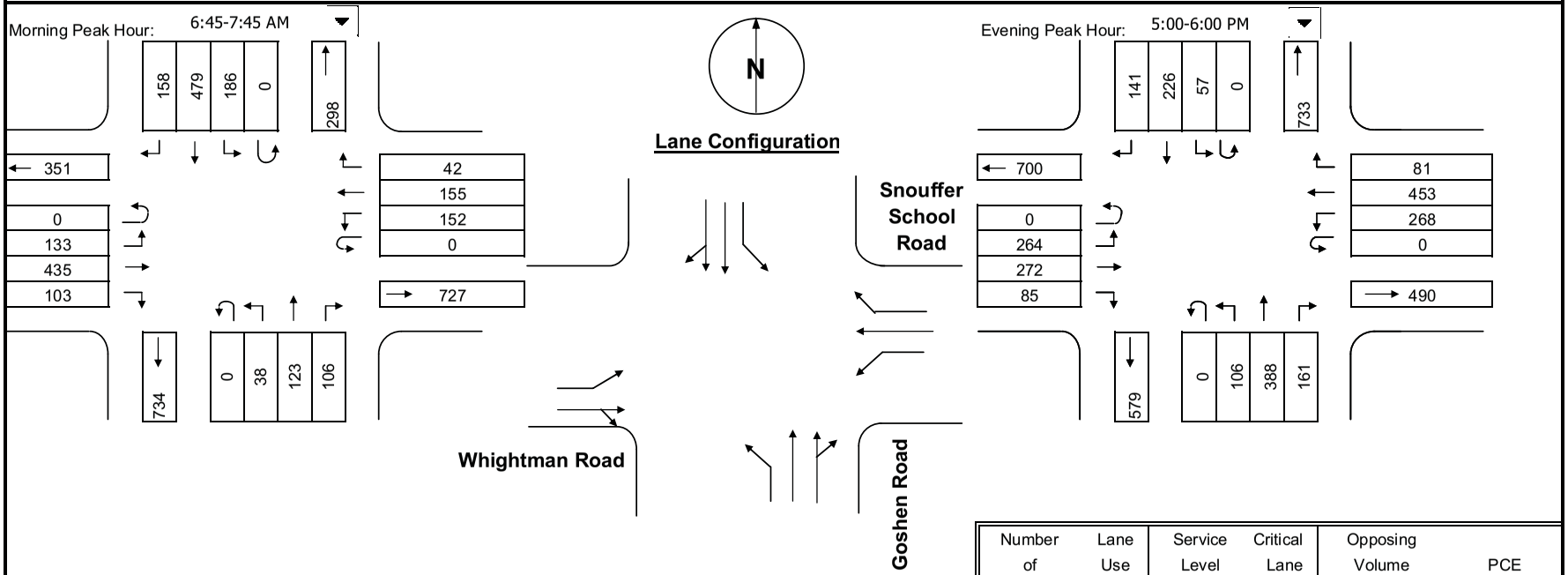

Number of Lanes	Lane Use Factor	Service Level	Critical Lane Vol	Opposing Volume (VPH)	PCE
1 = 1.00		A <= 1000		<= 199	1.1
2 = 0.53		B <= 1150		<= 599	2.0
3 = 0.37		C <= 1300		<= 799	3.0
4 = 0.30		D <= 1450		<= 999	4.0
5 = 0.25		E <= 1600		> 1000	5.0
		F > 1600			

Phasing

RTOR/Overlap
- ☐ Northbound
- ☐ Southbound
- ☐ Eastbound
- ☐ Westbound

Split Phasing
- ○ East/West
- ○ North/South
- ◉ None

Inx. Control
- ◉ Signal
- ○ Stop

Phase	Movement	Volume 1	Lane Use Factor - 2	Lane volume 1 X 2	Opposing Movement	Critical In. volume	*	Phase	Movement	Volume 1	Lane Use Factor - 2	Lane volume 1 X 2	Opposing Movement	Critical In. Volume	*
	NB	229	0.53	121	186	307			NB	549	0.53	291	57	348	*
	SB	637	0.53	338	38	376	*		SB	367	0.53	195	106	301	
	EB	538	1.00	538	152	690	*		EB	357	1.00	357	268	625	
	WB	155	1.00	155	133	288			WB	453	1.00	453	264	717	*
Remarks:			* Critical volume		Total	**1066**		Remarks:			* Critical volume		Total	**1065**	
						0.67	**B**							**0.67**	**B**

Critical Lane Volume Methodology
Turning Movement Summary and Level of Service

Prepared by: **STV Inc.**

Count Date: 9/30/2009
Conditions: Background
Design Year: 2012

Location: Centerway Road at Goshen Road
Computed by: MMO
Date 11/17/2009

Morning Peak Hour: 7:30-8:30 AM

Evening Peak Hour: 5:00-6:00 PM

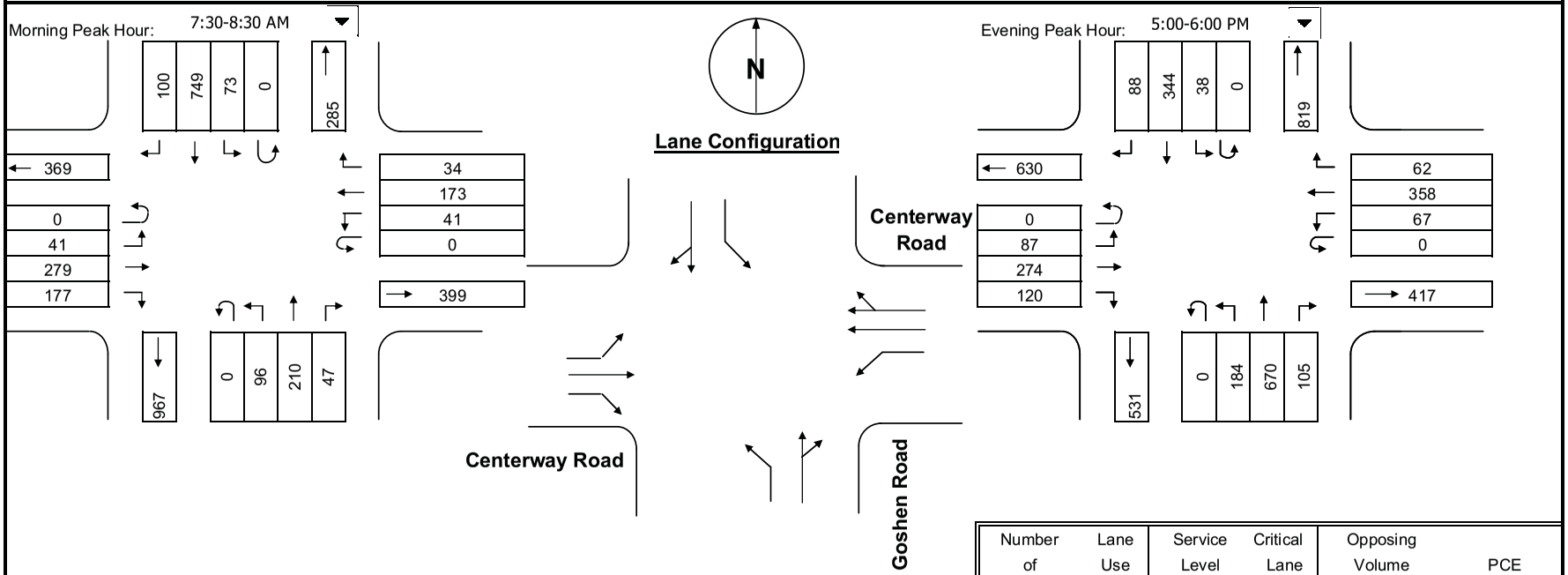

Number of Lanes	Lane Use Factor	Service Level	Critical Lane Vol	Opposing Volume (VPH)	PCE
1 = 1.00		A <= 1000		<= 199	1.1
2 = 0.53		B <= 1150		<= 599	2.0
3 = 0.37		C <= 1300		<= 799	3.0
4 = 0.30		D <= 1450		<= 999	4.0
5 = 0.25		E <= 1600		> 1000	5.0
		F > 1600			

Phasing

RTOR/Overlap
- ☐ Northbound
- ☐ Southbound
- ☐ Eastbound
- ☐ Westbound

Split Phasing
- ○ East/West
- ○ North/South
- ◉ None

Inx. Control
- ◉ Signal
- ○ Stop

Phase	Movement	Volume 1	Lane Use Factor - 2	Lane volume 1 X 2	Opposing Movement	Critical In. volume	*	Phase	Movement	Volume 1	Lane Use Factor - 2	Lane volume 1 X 2	Opposing Movement	Critical In. Volume	*
	NB	257	1.00	257	73	330			NB	775	1.00	775	38	813	*
	SB	849	1.00	849	96	945	*		SB	432	1.00	432	184	616	
	EB	279	1.00	279	41	320	*		EB	274	1.00	274	67	341	*
	WB	207	0.53	110	41	151			WB	420	0.53	223	87	310	
Remarks:			* Critical volume		Total	**1265**		Remarks:			* Critical volume		Total	**1154**	
						0.79	**C**							**0.72**	**C**

Critical Lane Volume Methodology
Turning Movement Summary and Level of Service

Prepared by: **STV Inc.**

Count Date: 9/30/2009
Conditions: Background
Design Year: 2012

Location: Centerway Road at Montgomery Village Avenue
Computed by: MMO
Date 11/17/2009

Morning Peak Hour: 7:30-8:30 AM

Evening Peak Hour: 5:00-6:00 PM

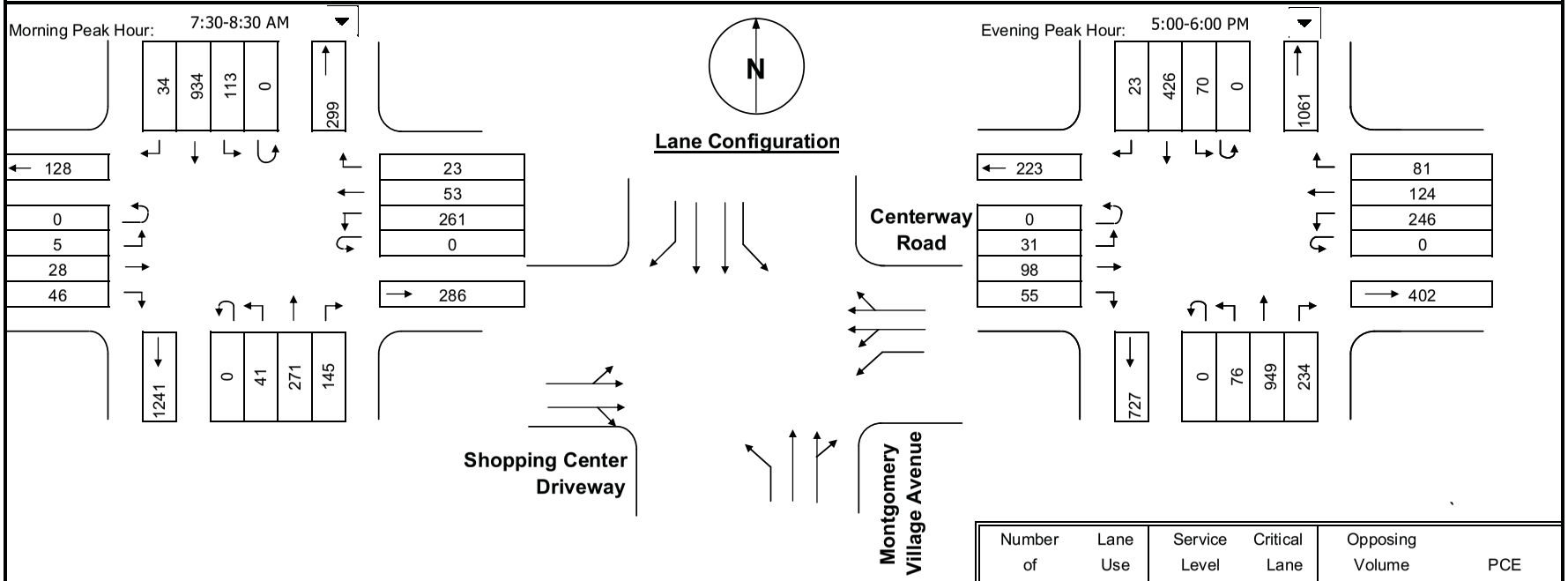

Number of Lanes	Lane Use Factor	Service Level	Critical Lane Vol	Opposing Volume (VPH)	PCE
1 = 1.00		A <= 1000		<= 199	1.1
2 = 0.53		B <= 1150		<= 599	2.0
3 = 0.37		C <= 1300		<= 799	3.0
4 = 0.30		D <= 1450		<= 999	4.0
5 = 0.25		E <= 1600		> 1000	5.0
		F > 1600			

Phasing

RTOR/Overlap
- ☐ Northbound
- ☐ Southbound
- ☐ Eastbound
- ☐ Westbound

Split Phasing
- ◉ East/West
- ○ North/South
- ○ None

Inx. Control
- ◉ Signal
- ○ Stop

Phase	Movement	Volume 1	Lane Use Factor - 2	Lane volume 1 X 2	Opposing Movement	Critical In. volume	*	Phase	Movement	Volume 1	Lane Use Factor - 2	Lane volume 1 X 2	Opposing Movement	Critical In. Volume	*
	NB	416	0.53	220	113	333			NB	1183	0.53	627	70	697	*
	SB	934	0.53	495	41	536	*		SB	426	0.53	226	76	302	
	EB	79	0.53	42	0	42	*		EB	184	0.53	98	0	98	*
	WB	337	0.40	135	0	135	*		WB	451	0.40	180	0	180	*
Remarks:			* Critical volume		Total	**713**		Remarks:			* Critical volume		Total	**975**	
						0.45	**A**							**0.61**	**A**

Movement	EBL	EBT	EBR	WBL	WBT	WBR	NBL	NBT	NBR	SBL	SBT	SBR
Lane Configurations												
Volume (vph)	5	28	46	261	53	27	41	271	145	117	934	34
Ideal Flow (vphpl)	1900	1900	1900	1900	1900	1900	1900	1900	1900	1900	1900	1900
Total Lost time (s)		7.0		7.0	7.0		7.0	7.0		7.0	7.0	7.0
Lane Util. Factor		0.95		0.91	0.91		1.00	0.95		1.00	0.91	0.91
Frt		0.91		1.00	0.98		1.00	0.95		1.00	1.00	0.85
Flt Protected		1.00		0.95	0.97		0.95	1.00		0.95	1.00	1.00
Satd. Flow (prot)		3217		1610	3226		1770	3354		1770	3388	1441
Flt Permitted		1.00		0.95	0.97		0.22	1.00		0.49	1.00	1.00
Satd. Flow (perm)		3217		1610	3226		407	3354		913	3388	1441
Peak-hour factor, PHF	0.92	0.92	0.92	0.92	0.92	0.92	0.92	0.92	0.92	0.92	0.92	0.92
Adj. Flow (vph)	5	30	50	284	58	29	45	295	158	127	1015	37
RTOR Reduction (vph)	0	46	0	0	10	0	0	39	0	0	0	13
Lane Group Flow (vph)	0	39	0	142	219	0	45	414	0	127	1019	20
Turn Type	Split			Split			Perm			Perm		Perm
Protected Phases	4	4		8	8			2			6	
Permitted Phases							2			6		6
Actuated Green, G (s)		10.0		15.2	15.2		73.8	73.8		73.8	73.8	73.8
Effective Green, g (s)		10.0		15.2	15.2		73.8	73.8		73.8	73.8	73.8
Actuated g/C Ratio		0.08		0.13	0.13		0.62	0.62		0.62	0.62	0.62
Clearance Time (s)		7.0		7.0	7.0		7.0	7.0		7.0	7.0	7.0
Vehicle Extension (s)		3.0		3.0	3.0		3.0	3.0		3.0	3.0	3.0
Lane Grp Cap (vph)		268		204	409		250	2063		561	2084	886
v/s Ratio Prot		c0.01		c0.09	0.07			0.12			c0.30	
v/s Ratio Perm							0.11			0.14		0.01
v/c Ratio		0.15		0.70	0.54		0.18	0.20		0.23	0.49	0.02
Uniform Delay, d1		51.0		50.2	49.1		10.0	10.1		10.3	12.7	9.0
Progression Factor		1.00		1.00	1.00		1.00	1.00		1.00	1.00	1.00
Incremental Delay, d2		0.3		9.9	1.4		1.6	0.2		0.9	0.8	0.0
Delay (s)		51.3		60.1	50.5		11.6	10.4		11.3	13.5	9.1
Level of Service		D		E	D		B	B		B	B	A
Approach Delay (s)		51.3			54.1			10.5			13.2	
Approach LOS		D			D			B			B	

Intersection Summary

HCM Average Control Delay	21.2	HCM Level of Service	C
HCM Volume to Capacity ratio	0.49		
Actuated Cycle Length (s)	120.0	Sum of lost time (s)	21.0
Intersection Capacity Utilization	65.9%	ICU Level of Service	C
Analysis Period (min)	15		

c Critical Lane Group

Movement	EBL	EBT	EBR	WBL	WBT	WBR	NBL	NBT	NBR	SBL	SBT	SBR
Lane Configurations												
Volume (vph)	41	279	177	41	173	34	96	210	47	73	749	100
Ideal Flow (vphpl)	1900	1900	1900	1900	1900	1900	1900	1900	1900	1900	1900	1900
Total Lost time (s)	5.0	5.0	5.0	5.0	5.0		5.0	5.0		5.0	5.0	
Lane Util. Factor	1.00	1.00	1.00	1.00	0.95		1.00	1.00		1.00	1.00	
Frt	1.00	1.00	0.85	1.00	0.98		1.00	0.97		1.00	0.98	
Flt Protected	0.95	1.00	1.00	0.95	1.00		0.95	1.00		0.95	1.00	
Satd. Flow (prot)	1770	1863	1583	1770	3452		1770	1812		1770	1830	
Flt Permitted	0.59	1.00	1.00	0.22	1.00		0.12	1.00		0.59	1.00	
Satd. Flow (perm)	1093	1863	1583	405	3452		216	1812		1096	1830	
Peak-hour factor, PHF	0.92	0.92	0.92	0.92	0.92	0.92	0.92	0.92	0.92	0.92	0.92	0.92
Adj. Flow (vph)	45	303	192	45	188	37	104	228	51	79	814	109
RTOR Reduction (vph)	0	0	157	0	16	0	0	8	0	0	4	0
Lane Group Flow (vph)	45	303	35	45	209	0	104	271	0	79	919	0
Turn Type	Perm		Perm	Perm			pm+pt			Perm		
Protected Phases		4			8		5	2			6	
Permitted Phases	4		4	8			2			6		
Actuated Green, G (s)	18.4	18.4	18.4	18.4	18.4		71.6	71.6		60.2	60.2	
Effective Green, g (s)	18.4	18.4	18.4	18.4	18.4		71.6	71.6		60.2	60.2	
Actuated g/C Ratio	0.18	0.18	0.18	0.18	0.18		0.72	0.72		0.60	0.60	
Clearance Time (s)	5.0	5.0	5.0	5.0	5.0		5.0	5.0		5.0	5.0	
Vehicle Extension (s)	3.0	3.0	3.0	3.0	3.0		3.0	3.0		3.0	3.0	
Lane Grp Cap (vph)	201	343	291	75	635		254	1297		660	1102	
v/s Ratio Prot		c0.16			0.06		c0.03	0.15			c0.50	
v/s Ratio Perm	0.04		0.02	0.11			0.27			0.07		
v/c Ratio	0.22	0.88	0.12	0.60	0.33		0.41	0.21		0.12	0.83	
Uniform Delay, d1	34.7	39.8	34.1	37.4	35.4		14.9	4.7		8.5	15.9	
Progression Factor	1.00	1.00	1.00	1.00	1.00		1.00	1.00		1.00	1.00	
Incremental Delay, d2	0.6	22.5	0.2	12.8	0.3		1.1	0.4		0.4	7.4	
Delay (s)	35.3	62.2	34.2	50.2	35.7		16.0	5.1		8.9	23.3	
Level of Service	D	E	C	D	D		B	A		A	C	
Approach Delay (s)		50.0			38.2			8.1			22.2	
Approach LOS		D			D			A			C	

Intersection Summary

HCM Average Control Delay	28.5	HCM Level of Service	C
HCM Volume to Capacity ratio	0.81		
Actuated Cycle Length (s)	100.0	Sum of lost time (s)	15.0
Intersection Capacity Utilization	86.3%	ICU Level of Service	E
Analysis Period (min)	15		

c Critical Lane Group

Movement	EBL	EBT	EBR	WBL	WBT	WBR	NBL	NBT	NBR	SBL	SBT	SBR
Lane Configurations												
Volume (vph)	26	6	403	3	7	3	158	187	6	3	1001	48
Ideal Flow (vphpl)	1900	1900	1900	1900	1900	1900	1900	1900	1900	1900	1900	1900
Total Lost time (s)		5.0	4.0		5.0		4.0	5.0		5.0	5.0	5.0
Lane Util. Factor		1.00	1.00		1.00		1.00	1.00		1.00	1.00	1.00
Frt		1.00	0.85		0.97		1.00	1.00		1.00	1.00	0.85
Flt Protected		0.96	1.00		0.99		0.95	1.00		0.95	1.00	1.00
Satd. Flow (prot)		1791	1583		1790		1770	1853		1770	1863	1583
Flt Permitted		0.80	1.00		0.92		0.07	1.00		0.63	1.00	1.00
Satd. Flow (perm)		1490	1583		1657		133	1853		1167	1863	1583
Peak-hour factor, PHF	0.92	0.92	0.92	0.92	0.92	0.92	0.92	0.92	0.92	0.92	0.92	0.92
Adj. Flow (vph)	28	7	438	3	8	3	172	203	7	3	1088	52
RTOR Reduction (vph)	0	0	83	0	3	0	0	1	0	0	0	11
Lane Group Flow (vph)	0	35	355	0	11	0	172	209	0	3	1088	41
Turn Type	Perm		pm+ov	Perm			pm+pt			Perm		Perm
Protected Phases		4	5		8		5	2			6	
Permitted Phases	4		4	8			2			6		6
Actuated Green, G (s)		4.5	16.2		4.5		67.8	67.8		52.1	52.1	52.1
Effective Green, g (s)		4.5	16.2		4.5		67.8	67.8		52.1	52.1	52.1
Actuated g/C Ratio		0.05	0.20		0.05		0.82	0.82		0.63	0.63	0.63
Clearance Time (s)		5.0	4.0		5.0		4.0	5.0		5.0	5.0	5.0
Vehicle Extension (s)		3.0	3.0		3.0		3.0	3.0		3.0	3.0	3.0
Lane Grp Cap (vph)		81	312		91		342	1527		739	1179	1002
v/s Ratio Prot			c0.16				0.07	0.11			c0.58	
v/s Ratio Perm		0.02	0.06		0.01		0.34			0.00		0.03
v/c Ratio		0.43	1.14		0.12		0.50	0.14		0.00	0.92	0.04
Uniform Delay, d1		37.7	33.0		37.0		20.3	1.4		5.6	13.3	5.7
Progression Factor		1.00	1.00		1.00		1.00	1.00		1.00	1.00	1.00
Incremental Delay, d2		3.7	93.9		0.6		1.2	0.0		0.0	11.9	0.0
Delay (s)		41.3	126.9		37.6		21.4	1.5		5.6	25.2	5.7
Level of Service		D	F		D		C	A		A	C	A
Approach Delay (s)		120.6			37.6			10.5			24.3	
Approach LOS		F			D			B			C	

Intersection Summary

HCM Average Control Delay	44.4	HCM Level of Service	D
HCM Volume to Capacity ratio	0.96		
Actuated Cycle Length (s)	82.3	Sum of lost time (s)	13.0
Intersection Capacity Utilization	92.6%	ICU Level of Service	F
Analysis Period (min)	15		

c Critical Lane Group

Movement	EBL	EBT	EBR	WBL	WBT	WBR	NBL	NBT	NBR	SBL	SBT	SBR
Lane Configurations												
Volume (vph)	105	610	125	140	508	136	113	281	148	381	906	239
Ideal Flow (vphpl)	1900	1900	1900	1900	1900	1900	1900	1900	1900	1900	1900	1900
Total Lost time (s)	5.0	5.0	5.0	5.0	5.0	5.0	4.0	5.0	5.0	4.0	5.0	5.0
Lane Util. Factor	1.00	0.95	1.00	0.91	0.91	1.00	1.00	0.95	1.00	1.00	0.95	1.00
Frt	1.00	1.00	0.85	1.00	1.00	0.85	1.00	1.00	0.85	1.00	1.00	0.85
Flt Protected	0.95	1.00	1.00	0.95	1.00	1.00	0.95	1.00	1.00	0.95	1.00	1.00
Satd. Flow (prot)	1770	3539	1583	1610	3386	1583	1770	3539	1583	1770	3539	1583
Flt Permitted	0.95	1.00	1.00	0.95	1.00	1.00	0.18	1.00	1.00	0.44	1.00	1.00
Satd. Flow (perm)	1770	3539	1583	1610	3386	1583	329	3539	1583	827	3539	1583
Peak-hour factor, PHF	0.92	0.92	0.92	0.92	0.92	0.92	0.92	0.92	0.92	0.92	0.92	0.92
Adj. Flow (vph)	114	663	136	152	552	148	123	305	161	414	985	260
RTOR Reduction (vph)	0	0	115	0	0	114	0	0	119	0	0	163
Lane Group Flow (vph)	114	663	21	137	567	34	123	305	42	414	985	97
Turn Type	Split		Perm	Split		Perm	pm+pt		Perm	pm+pt		Perm
Protected Phases	2	2		6	6		3	8		7	4	
Permitted Phases			2			6	8		8	4		4
Actuated Green, G (s)	18.9	18.9	18.9	27.3	27.3	27.3	41.7	31.5	31.5	58.8	44.6	44.6
Effective Green, g (s)	18.9	18.9	18.9	27.3	27.3	27.3	41.7	31.5	31.5	58.8	44.6	44.6
Actuated g/C Ratio	0.16	0.16	0.16	0.23	0.23	0.23	0.35	0.26	0.26	0.49	0.37	0.37
Clearance Time (s)	5.0	5.0	5.0	5.0	5.0	5.0	4.0	5.0	5.0	4.0	5.0	5.0
Vehicle Extension (s)	3.0	3.0	3.0	3.0	3.0	3.0	3.0	3.0	3.0	3.0	3.0	3.0
Lane Grp Cap (vph)	279	557	249	366	770	360	237	929	416	588	1315	588
v/s Ratio Prot	0.06	c0.19		0.09	c0.17		0.04	0.09		c0.14	c0.28	
v/s Ratio Perm			0.01			0.02	0.14		0.03	0.21		0.06
v/c Ratio	0.41	1.19	0.09	0.37	0.74	0.09	0.52	0.33	0.10	0.70	0.75	0.16
Uniform Delay, d1	45.5	50.6	43.2	39.1	43.0	36.6	28.3	35.7	33.5	20.8	32.8	25.2
Progression Factor	1.00	1.00	1.00	1.00	1.00	1.00	1.00	1.00	1.00	0.88	0.93	1.03
Incremental Delay, d2	4.4	102.5	0.7	0.6	3.7	0.1	1.9	0.9	0.5	3.3	2.1	0.1
Delay (s)	49.9	153.1	43.9	39.8	46.7	36.7	30.2	36.7	34.0	21.6	32.7	26.1
Level of Service	D	F	D	D	D	D	C	D	C	C	C	C
Approach Delay (s)		123.9			43.8			34.6			28.9	
Approach LOS		F			D			C			C	

Intersection Summary

HCM Average Control Delay	54.5	HCM Level of Service	D
HCM Volume to Capacity ratio	0.80		
Actuated Cycle Length (s)	120.0	Sum of lost time (s)	14.0
Intersection Capacity Utilization	78.0%	ICU Level of Service	D
Analysis Period (min)	15		

c Critical Lane Group

Movement	EBL	EBT	EBR	WBL	WBT	WBR	NBL	NBT	NBR	SBL	SBT	SBR
Lane Configurations												
Volume (vph)	133	435	103	152	155	42	38	123	106	186	479	158
Ideal Flow (vphpl)	1900	1900	1900	1900	1900	1900	1900	1900	1900	1900	1900	1900
Total Lost time (s)	4.0	5.0		4.0	4.0	4.0	6.0	6.0		4.0	6.0	
Lane Util. Factor	1.00	1.00		1.00	1.00	1.00	1.00	0.95		1.00	0.95	
Frt	1.00	0.97		1.00	1.00	0.85	1.00	0.93		1.00	0.96	
Flt Protected	0.95	1.00		0.95	1.00	1.00	0.95	1.00		0.95	1.00	
Satd. Flow (prot)	1770	1809		1770	1863	1583	1770	3294		1770	3407	
Flt Permitted	0.60	1.00		0.10	1.00	1.00	0.39	1.00		0.53	1.00	
Satd. Flow (perm)	1117	1809		191	1863	1583	723	3294		985	3407	
Peak-hour factor, PHF	0.92	0.92	0.92	0.92	0.92	0.92	0.92	0.92	0.92	0.92	0.92	0.92
Adj. Flow (vph)	145	473	112	165	168	46	41	134	115	202	521	172
RTOR Reduction (vph)	0	7	0	0	0	29	0	80	0	0	25	0
Lane Group Flow (vph)	145	578	0	165	168	17	41	169	0	202	668	0
Turn Type	pm+pt			custom		custom	Perm			pm+pt		
Protected Phases	7	4		3				2		1	6	
Permitted Phases	4			8	8	8	2			6		
Actuated Green, G (s)	52.6	41.7		54.8	43.3	43.3	36.1	36.1		51.8	51.8	
Effective Green, g (s)	52.6	41.7		54.8	43.3	43.3	36.1	36.1		51.8	51.8	
Actuated g/C Ratio	0.44	0.35		0.46	0.36	0.36	0.30	0.30		0.43	0.43	
Clearance Time (s)	4.0	5.0		4.0	4.0	4.0	6.0	6.0		4.0	6.0	
Vehicle Extension (s)	3.0	3.0		3.0	3.0	3.0	3.0	3.0		3.0	3.0	
Lane Grp Cap (vph)	549	629		239	672	571	218	991		502	1471	
v/s Ratio Prot	0.02	c0.32		c0.07				0.05		0.04	c0.20	
v/s Ratio Perm	0.09			0.25	0.09	0.01	0.06			0.13		
v/c Ratio	0.26	0.92		0.69	0.25	0.03	0.19	0.17		0.40	0.45	
Uniform Delay, d1	20.7	37.5		25.3	26.9	24.8	31.1	30.9		22.0	24.1	
Progression Factor	1.00	1.00		1.32	0.92	0.78	1.00	1.00		1.00	1.00	
Incremental Delay, d2	0.3	18.4		8.3	0.2	0.0	1.9	0.4		0.5	1.0	
Delay (s)	20.9	55.9		41.6	24.9	19.2	33.0	31.3		22.5	25.1	
Level of Service	C	E		D	C	B	C	C		C	C	
Approach Delay (s)		49.0			31.5			31.5			24.5	
Approach LOS		D			C			C			C	

Intersection Summary

HCM Average Control Delay	34.3	HCM Level of Service	C
HCM Volume to Capacity ratio	0.66		
Actuated Cycle Length (s)	120.0	Sum of lost time (s)	15.0
Intersection Capacity Utilization	79.2%	ICU Level of Service	D
Analysis Period (min)	15		

c Critical Lane Group

Movement	EBL	EBT	EBR	WBL	WBT	WBR	NBL	NBT	NBR	SBL	SBT	SBR
Lane Configurations												
Volume (vph)	20	0	47	308	1	103	5	161	33	19	723	8
Ideal Flow (vphpl)	1900	1900	1900	1900	1900	1900	1900	1900	1900	1900	1900	1900
Total Lost time (s)		5.0			5.0	5.0		5.0	5.0		5.0	5.0
Lane Util. Factor		1.00			1.00	1.00		1.00	1.00		1.00	1.00
Frt		0.91			1.00	0.85		1.00	0.85		1.00	0.85
Flt Protected		0.99			0.95	1.00		1.00	1.00		1.00	1.00
Satd. Flow (prot)		1662			1774	1583		1860	1583		1860	1583
Flt Permitted		0.61			0.69	1.00		0.98	1.00		0.99	1.00
Satd. Flow (perm)		1036			1284	1583		1832	1583		1845	1583
Peak-hour factor, PHF	0.92	0.92	0.92	0.92	0.92	0.92	0.92	0.92	0.92	0.92	0.92	0.92
Adj. Flow (vph)	22	0	51	335	1	112	5	175	36	21	786	9
RTOR Reduction (vph)	0	40	0	0	0	87	0	0	11	0	0	2
Lane Group Flow (vph)	0	33	0	0	336	25	0	180	25	0	807	7
Turn Type	Perm			Perm		Perm	Perm		Perm	Perm		Perm
Protected Phases		4			8			2			6	
Permitted Phases	4			8		8	2		2	6		6
Actuated Green, G (s)		27.0			27.0	27.0		83.0	83.0		83.0	83.0
Effective Green, g (s)		27.0			27.0	27.0		83.0	83.0		83.0	83.0
Actuated g/C Ratio		0.22			0.22	0.22		0.69	0.69		0.69	0.69
Clearance Time (s)		5.0			5.0	5.0		5.0	5.0		5.0	5.0
Vehicle Extension (s)		3.0			3.0	3.0		3.0	3.0		3.0	3.0
Lane Grp Cap (vph)		233			289	356		1267	1095		1276	1095
v/s Ratio Prot												
v/s Ratio Perm		0.03			c0.26	0.02		0.10	0.02		c0.44	0.00
v/c Ratio		0.14			1.16	0.07		0.14	0.02		0.63	0.01
Uniform Delay, d1		37.2			46.5	36.6		6.3	5.8		10.1	5.7
Progression Factor		1.00			1.00	1.00		1.00	1.00		2.14	1.98
Incremental Delay, d2		0.3			104.4	0.1		0.2	0.0		0.8	0.0
Delay (s)		37.5			150.9	36.7		6.6	5.8		22.5	11.3
Level of Service		D			F	D		A	A		C	B
Approach Delay (s)		37.5			122.3			6.4			22.4	
Approach LOS		D			F			A			C	

Intersection Summary

HCM Average Control Delay	49.7	HCM Level of Service	D
HCM Volume to Capacity ratio	0.76		
Actuated Cycle Length (s)	120.0	Sum of lost time (s)	10.0
Intersection Capacity Utilization	84.1%	ICU Level of Service	E
Analysis Period (min)	15		

c Critical Lane Group

Movement	EBL	EBR	NBL	NBT	SBT	SBR
Lane Configurations						
Volume (veh/h)	10	48	7	176	1075	20
Sign Control	Stop			Free	Free	
Grade	0%			0%	0%	
Peak Hour Factor	0.92	0.92	0.92	0.92	0.92	0.92
Hourly flow rate (vph)	11	52	8	191	1168	22
Pedestrians				45	9	
Lane Width (ft)				12.0	12.0	
Walking Speed (ft/s)				4.0	4.0	
Percent Blockage				4	1	
Right turn flare (veh)						
Median type				None	None	
Median storage veh)						
Upstream signal (ft)						
pX, platoon unblocked						
vC, conflicting volume	1384	1213	1190			
vC1, stage 1 conf vol						
vC2, stage 2 conf vol						
vCu, unblocked vol	1384	1213	1190			
tC, single (s)	6.4	6.2	4.1			
tC, 2 stage (s)						
tF (s)	3.5	3.3	2.2			
p0 queue free %	93	76	99			
cM capacity (veh/h)	155	213	587			

Direction, Lane #	EB 1	NB 1	SB 1	SB 2
Volume Total	63	199	1168	22
Volume Left	11	8	0	0
Volume Right	52	0	0	22
cSH	200	587	1700	1700
Volume to Capacity	0.31	0.01	0.69	0.01
Queue Length 95th (ft)	32	1	0	0
Control Delay (s)	31.0	0.6	0.0	0.0
Lane LOS	D	A		
Approach Delay (s)	31.0	0.6	0.0	
Approach LOS	D			

Intersection Summary			
Average Delay	1.4		
Intersection Capacity Utilization	75.1%	ICU Level of Service	D
Analysis Period (min)	15		

Movement	EBL	EBT	EBR	WBL	WBT	WBR	NBL	NBT	NBR	SBL	SBT	SBR
Lane Configurations												
Volume (vph)	5	4	35	70	2	7	6	378	110	35	1476	10
Ideal Flow (vphpl)	1900	1900	1900	1900	1900	1900	1900	1900	1900	1900	1900	1900
Total Lost time (s)		5.0		5.0	5.0		5.0	5.0		5.0	5.0	
Lane Util. Factor		1.00		1.00	1.00		1.00	0.95		1.00	0.95	
Frt		0.89		1.00	0.88		1.00	0.97		1.00	1.00	
Flt Protected		0.99		0.95	1.00		0.95	1.00		0.95	1.00	
Satd. Flow (prot)		1651		1770	1639		1770	3419		1770	3536	
Flt Permitted		0.97		0.82	1.00		0.15	1.00		0.43	1.00	
Satd. Flow (perm)		1611		1535	1639		274	3419		800	3536	
Peak-hour factor, PHF	0.92	0.92	0.92	0.92	0.92	0.92	0.92	0.92	0.92	0.92	0.92	0.92
Adj. Flow (vph)	5	4	38	76	2	8	7	411	120	38	1604	11
RTOR Reduction (vph)	0	35	0	0	7	0	0	12	0	0	0	0
Lane Group Flow (vph)	0	12	0	76	3	0	7	519	0	38	1615	0
Turn Type	Perm			Perm			Perm			pm+pt		
Protected Phases		4			8			2		1	6	
Permitted Phases	4			8			2			6		
Actuated Green, G (s)		10.2		10.2	10.2		91.0	91.0		99.8	99.8	
Effective Green, g (s)		10.2		10.2	10.2		91.0	91.0		99.8	99.8	
Actuated g/C Ratio		0.08		0.08	0.08		0.76	0.76		0.83	0.83	
Clearance Time (s)		5.0		5.0	5.0		5.0	5.0		5.0	5.0	
Vehicle Extension (s)		3.0		3.0	3.0		3.0	3.0		3.0	3.0	
Lane Grp Cap (vph)		137		130	139		208	2593		696	2941	
v/s Ratio Prot					0.00			0.15		0.00	c0.46	
v/s Ratio Perm		0.01		c0.05			0.03			0.04		
v/c Ratio		0.09		0.58	0.02		0.03	0.20		0.05	0.55	
Uniform Delay, d1		50.6		52.9	50.3		3.6	4.1		1.9	3.1	
Progression Factor		1.00		1.00	1.00		2.36	2.84		1.00	1.00	
Incremental Delay, d2		0.3		6.6	0.1		0.3	0.2		0.0	0.7	
Delay (s)		50.9		59.4	50.4		8.8	11.9		1.9	3.9	
Level of Service		D		E	D		A	B		A	A	
Approach Delay (s)		50.9			58.4			11.9			3.8	
Approach LOS		D			E			B			A	

Intersection Summary

HCM Average Control Delay	8.7	HCM Level of Service	A
HCM Volume to Capacity ratio	0.55		
Actuated Cycle Length (s)	120.0	Sum of lost time (s)	10.0
Intersection Capacity Utilization	60.0%	ICU Level of Service	B
Analysis Period (min)	15		

c Critical Lane Group

Movement	EBL	EBT	EBR	WBL	WBT	WBR	NBL	NBT	NBR	SBL	SBT	SBR
Lane Configurations												
Volume (vph)	31	98	55	246	124	81	76	949	234	70	426	23
Ideal Flow (vphpl)	1900	1900	1900	1900	1900	1900	1900	1900	1900	1900	1900	1900
Total Lost time (s)		7.0		7.0	7.0		7.0	7.0		7.0	7.0	7.0
Lane Util. Factor		0.95		0.91	0.91		1.00	0.95		1.00	0.91	0.91
Frt		0.96		1.00	0.96		1.00	0.97		1.00	1.00	0.85
Flt Protected		0.99		0.95	0.98		0.95	1.00		0.95	1.00	1.00
Satd. Flow (prot)		3352		1610	3202		1770	3434		1770	3387	1441
Flt Permitted		0.99		0.95	0.98		0.46	1.00		0.14	1.00	1.00
Satd. Flow (perm)		3352		1610	3202		863	3434		257	3387	1441
Peak-hour factor, PHF	0.92	0.92	0.92	0.92	0.92	0.92	0.92	0.92	0.92	0.92	0.92	0.92
Adj. Flow (vph)	34	107	60	267	135	88	83	1032	254	76	463	25
RTOR Reduction (vph)	0	46	0	0	28	0	0	14	0	0	0	10
Lane Group Flow (vph)	0	155	0	166	296	0	83	1272	0	76	466	12
Turn Type	Split			Split			Perm			Perm		Perm
Protected Phases	4	4		8	8			2			6	
Permitted Phases							2			6		6
Actuated Green, G (s)		13.9		17.2	17.2		67.9	67.9		67.9	67.9	67.9
Effective Green, g (s)		13.9		17.2	17.2		67.9	67.9		67.9	67.9	67.9
Actuated g/C Ratio		0.12		0.14	0.14		0.57	0.57		0.57	0.57	0.57
Clearance Time (s)		7.0		7.0	7.0		7.0	7.0		7.0	7.0	7.0
Vehicle Extension (s)		3.0		3.0	3.0		3.0	3.0		3.0	3.0	3.0
Lane Grp Cap (vph)		388		231	459		488	1943		145	1916	815
v/s Ratio Prot		c0.05		c0.10	0.09			c0.37			0.14	
v/s Ratio Perm							0.10			0.30		0.01
v/c Ratio		0.40		0.72	0.64		0.17	0.65		0.52	0.24	0.02
Uniform Delay, d1		49.2		49.1	48.5		12.5	18.0		16.1	13.1	11.4
Progression Factor		1.00		1.00	1.00		1.00	1.00		1.00	1.00	1.00
Incremental Delay, d2		0.7		10.2	3.1		0.8	1.7		12.9	0.3	0.0
Delay (s)		49.9		59.3	51.6		13.3	19.7		29.0	13.4	11.4
Level of Service		D		E	D		B	B		C	B	B
Approach Delay (s)		49.9			54.2			19.3			15.4	
Approach LOS		D			D			B			B	

Intersection Summary

HCM Average Control Delay	27.3	HCM Level of Service	C
HCM Volume to Capacity ratio	0.63		
Actuated Cycle Length (s)	120.0	Sum of lost time (s)	21.0
Intersection Capacity Utilization	79.5%	ICU Level of Service	D
Analysis Period (min)	15		

c Critical Lane Group

Movement	EBL	EBT	EBR	WBL	WBT	WBR	NBL	NBT	NBR	SBL	SBT	SBR
Lane Configurations												
Volume (vph)	87	274	120	67	358	62	184	670	105	38	344	88
Ideal Flow (vphpl)	1900	1900	1900	1900	1900	1900	1900	1900	1900	1900	1900	1900
Total Lost time (s)	5.0	5.0	5.0	5.0	5.0		5.0	5.0		5.0	5.0	
Lane Util. Factor	1.00	1.00	1.00	1.00	0.95		1.00	1.00		1.00	1.00	
Frt	1.00	1.00	0.85	1.00	0.98		1.00	0.98		1.00	0.97	
Flt Protected	0.95	1.00	1.00	0.95	1.00		0.95	1.00		0.95	1.00	
Satd. Flow (prot)	1770	1863	1583	1770	3461		1770	1825		1770	1806	
Flt Permitted	0.33	1.00	1.00	0.30	1.00		0.35	1.00		0.30	1.00	
Satd. Flow (perm)	617	1863	1583	557	3461		659	1825		553	1806	
Peak-hour factor, PHF	0.92	0.92	0.92	0.92	0.92	0.92	0.92	0.92	0.92	0.92	0.92	0.92
Adj. Flow (vph)	95	298	130	73	389	67	200	728	114	41	374	96
RTOR Reduction (vph)	0	0	102	0	16	0	0	4	0	0	7	0
Lane Group Flow (vph)	95	298	28	73	440	0	200	838	0	41	463	0
Turn Type	Perm		Perm	Perm			pm+pt			Perm		
Protected Phases		4			8		5	2			6	
Permitted Phases	4		4	8			2			6		
Actuated Green, G (s)	21.8	21.8	21.8	21.8	21.8		68.2	68.2		53.3	53.3	
Effective Green, g (s)	21.8	21.8	21.8	21.8	21.8		68.2	68.2		53.3	53.3	
Actuated g/C Ratio	0.22	0.22	0.22	0.22	0.22		0.68	0.68		0.53	0.53	
Clearance Time (s)	5.0	5.0	5.0	5.0	5.0		5.0	5.0		5.0	5.0	
Vehicle Extension (s)	3.0	3.0	3.0	3.0	3.0		3.0	3.0		3.0	3.0	
Lane Grp Cap (vph)	135	406	345	121	754		559	1245		295	963	
v/s Ratio Prot		c0.16			0.13		0.04	c0.46			0.26	
v/s Ratio Perm	0.15		0.02	0.13			0.21			0.07		
v/c Ratio	0.70	0.73	0.08	0.60	0.58		0.36	0.67		0.14	0.48	
Uniform Delay, d1	36.1	36.4	31.1	35.2	35.0		7.4	9.3		11.8	14.7	
Progression Factor	1.00	1.00	1.00	1.00	1.00		1.00	1.00		1.00	1.00	
Incremental Delay, d2	15.3	6.7	0.1	8.2	1.2		0.4	2.9		1.0	1.7	
Delay (s)	51.5	43.1	31.2	43.4	36.2		7.8	12.3		12.8	16.4	
Level of Service	D	D	C	D	D		A	B		B	B	
Approach Delay (s)		41.7			37.2			11.4			16.1	
Approach LOS		D			D			B			B	

Intersection Summary

HCM Average Control Delay	23.6	HCM Level of Service	C
HCM Volume to Capacity ratio	0.69		
Actuated Cycle Length (s)	100.0	Sum of lost time (s)	10.0
Intersection Capacity Utilization	85.2%	ICU Level of Service	E
Analysis Period (min)	15		

c Critical Lane Group

Movement	EBL	EBT	EBR	WBL	WBT	WBR	NBL	NBT	NBR	SBL	SBT	SBR
Lane Configurations												
Volume (vph)	84	6	334	6	7	4	464	812	7	4	386	70
Ideal Flow (vphpl)	1900	1900	1900	1900	1900	1900	1900	1900	1900	1900	1900	1900
Total Lost time (s)		5.0	4.0		4.0		4.0	5.0		5.0	5.0	5.0
Lane Util. Factor		1.00	1.00		1.00		1.00	1.00		1.00	1.00	1.00
Frt		1.00	0.85		0.97		1.00	1.00		1.00	1.00	0.85
Flt Protected		0.96	1.00		0.98		0.95	1.00		0.95	1.00	1.00
Satd. Flow (prot)		1780	1583		1777		1770	1860		1770	1863	1583
Flt Permitted		0.73	1.00		0.90		0.31	1.00		0.33	1.00	1.00
Satd. Flow (perm)		1355	1583		1628		571	1860		622	1863	1583
Peak-hour factor, PHF	0.92	0.92	0.92	0.92	0.92	0.92	0.92	0.92	0.92	0.92	0.92	0.92
Adj. Flow (vph)	91	7	363	7	8	4	504	883	8	4	420	76
RTOR Reduction (vph)	0	0	223	0	3	0	0	0	0	0	0	49
Lane Group Flow (vph)	0	98	140	0	16	0	504	891	0	4	420	27
Turn Type	Perm		pm+ov	Perm			pm+pt			Perm		Perm
Protected Phases		4	5		8		5	2			6	
Permitted Phases	4		4	8			2			6		6
Actuated Green, G (s)		8.4	21.5		9.4		37.2	37.2		20.1	20.1	20.1
Effective Green, g (s)		8.4	21.5		9.4		37.2	37.2		20.1	20.1	20.1
Actuated g/C Ratio		0.15	0.39		0.17		0.67	0.67		0.36	0.36	0.36
Clearance Time (s)		5.0	4.0		4.0		4.0	5.0		5.0	5.0	5.0
Vehicle Extension (s)		3.0	3.0		3.0		3.0	3.0		3.0	3.0	3.0
Lane Grp Cap (vph)		205	612		275		665	1244		225	673	572
v/s Ratio Prot			0.05				0.18	c0.48			0.23	
v/s Ratio Perm		c0.07	0.03		0.01		c0.33			0.01		0.02
v/c Ratio		0.48	0.23		0.06		0.76	0.72		0.02	0.62	0.05
Uniform Delay, d1		21.6	11.5		19.4		6.1	5.8		11.4	14.6	11.5
Progression Factor		1.00	1.00		1.00		1.00	1.00		1.00	1.00	1.00
Incremental Delay, d2		1.8	0.2		0.1		4.9	2.0		0.0	1.8	0.0
Delay (s)		23.4	11.7		19.5		11.0	7.8		11.4	16.4	11.6
Level of Service		C	B		B		B	A		B	B	B
Approach Delay (s)		14.2			19.5			9.0			15.7	
Approach LOS		B			B			A			B	

Intersection Summary

HCM Average Control Delay	11.5	HCM Level of Service	B
HCM Volume to Capacity ratio	0.69		
Actuated Cycle Length (s)	55.6	Sum of lost time (s)	10.0
Intersection Capacity Utilization	72.8%	ICU Level of Service	C
Analysis Period (min)	15		

c Critical Lane Group

Movement	EBL	EBT	EBR	WBL	WBT	WBR	NBL	NBT	NBR	SBL	SBT	SBR
Lane Configurations												
Volume (vph)	218	663	165	171	722	416	194	778	143	200	344	195
Ideal Flow (vphpl)	1900	1900	1900	1900	1900	1900	1900	1900	1900	1900	1900	1900
Total Lost time (s)	5.0	5.0	5.0	5.0	5.0	5.0	4.0	5.0	5.0	4.0	5.0	5.0
Lane Util. Factor	1.00	0.95	1.00	0.91	0.91	1.00	1.00	0.95	1.00	1.00	0.95	1.00
Frt	1.00	1.00	0.85	1.00	1.00	0.85	1.00	1.00	0.85	1.00	1.00	0.85
Flt Protected	0.95	1.00	1.00	0.95	1.00	1.00	0.95	1.00	1.00	0.95	1.00	1.00
Satd. Flow (prot)	1770	3539	1583	1610	3386	1583	1770	3539	1583	1770	3539	1583
Flt Permitted	0.95	1.00	1.00	0.95	1.00	1.00	0.47	1.00	1.00	0.15	1.00	1.00
Satd. Flow (perm)	1770	3539	1583	1610	3386	1583	876	3539	1583	289	3539	1583
Peak-hour factor, PHF	0.92	0.92	0.92	0.92	0.92	0.92	0.92	0.92	0.92	0.92	0.92	0.92
Adj. Flow (vph)	237	721	179	186	785	452	211	846	155	217	374	212
RTOR Reduction (vph)	0	0	142	0	0	204	0	0	103	0	0	141
Lane Group Flow (vph)	237	721	37	167	804	248	211	846	52	217	374	71
Turn Type	Split		Perm	Split		Perm	pm+pt		Perm	pm+pt		Perm
Protected Phases	2	2		6	6		3	8		7	4	
Permitted Phases			2			6	8		8	4		4
Actuated Green, G (s)	25.0	25.0	25.0	25.0	25.0	25.0	50.7	40.0	40.0	51.3	40.3	40.3
Effective Green, g (s)	25.0	25.0	25.0	25.0	25.0	25.0	50.7	40.0	40.0	51.3	40.3	40.3
Actuated g/C Ratio	0.21	0.21	0.21	0.21	0.21	0.21	0.42	0.33	0.33	0.43	0.34	0.34
Clearance Time (s)	5.0	5.0	5.0	5.0	5.0	5.0	4.0	5.0	5.0	4.0	5.0	5.0
Vehicle Extension (s)	3.0	3.0	3.0	3.0	3.0	3.0	3.0	3.0	3.0	3.0	3.0	3.0
Lane Grp Cap (vph)	369	737	330	335	705	330	450	1180	528	259	1189	532
v/s Ratio Prot	0.13	c0.20		0.10	c0.24		0.04	0.24		c0.08	0.11	
v/s Ratio Perm			0.02			0.16	0.16		0.03	c0.28		0.04
v/c Ratio	0.64	0.98	0.11	0.50	1.14	0.75	0.47	0.72	0.10	0.84	0.31	0.13
Uniform Delay, d1	43.4	47.2	38.5	42.0	47.5	44.6	22.8	35.0	27.6	25.4	29.6	27.7
Progression Factor	1.00	1.00	1.00	1.00	1.00	1.00	1.00	1.00	1.00	1.00	1.00	1.00
Incremental Delay, d2	8.3	28.3	0.7	1.2	79.6	9.3	0.8	3.8	0.4	20.4	0.2	0.1
Delay (s)	51.7	75.5	39.2	43.1	127.1	53.8	23.6	38.8	27.9	45.8	29.7	27.8
Level of Service	D	E	D	D	F	D	C	D	C	D	C	C
Approach Delay (s)		64.8			94.0			34.8			33.6	
Approach LOS		E			F			C			C	

Intersection Summary

HCM Average Control Delay	60.5	HCM Level of Service	E
HCM Volume to Capacity ratio	0.90		
Actuated Cycle Length (s)	120.0	Sum of lost time (s)	14.0
Intersection Capacity Utilization	86.7%	ICU Level of Service	E
Analysis Period (min)	15		

c Critical Lane Group

Movement	EBL	EBT	EBR	WBL	WBT	WBR	NBL	NBT	NBR	SBL	SBT	SBR
Lane Configurations												
Volume (vph)	264	272	85	268	453	81	106	388	161	57	226	141
Ideal Flow (vphpl)	1900	1900	1900	1900	1900	1900	1900	1900	1900	1900	1900	1900
Total Lost time (s)	4.0	5.0		4.0	4.0	4.0	6.0	6.0		4.0	6.0	
Lane Util. Factor	1.00	1.00		1.00	1.00	1.00	1.00	0.95		1.00	0.95	
Frt	1.00	0.96		1.00	1.00	0.85	1.00	0.96		1.00	0.94	
Flt Protected	0.95	1.00		0.95	1.00	1.00	0.95	1.00		0.95	1.00	
Satd. Flow (prot)	1770	1796		1770	1863	1583	1770	3384		1770	3336	
Flt Permitted	0.11	1.00		0.29	1.00	1.00	0.52	1.00		0.30	1.00	
Satd. Flow (perm)	212	1796		536	1863	1583	963	3384		556	3336	
Peak-hour factor, PHF	0.92	0.92	0.92	0.92	0.92	0.92	0.92	0.92	0.92	0.92	0.92	0.92
Adj. Flow (vph)	287	296	92	291	492	88	115	422	175	62	246	153
RTOR Reduction (vph)	0	10	0	0	0	61	0	33	0	0	72	0
Lane Group Flow (vph)	287	378	0	291	492	27	115	564	0	62	327	0
Turn Type	pm+pt			custom		custom	Perm			pm+pt		
Protected Phases	7	4		3				2		1	6	
Permitted Phases	4			8	8	8	2			6		
Actuated Green, G (s)	51.7	36.8		50.9	36.9	36.9	43.4	43.4		54.2	54.2	
Effective Green, g (s)	51.7	36.8		50.9	36.9	36.9	43.4	43.4		54.2	54.2	
Actuated g/C Ratio	0.43	0.31		0.42	0.31	0.31	0.36	0.36		0.45	0.45	
Clearance Time (s)	4.0	5.0		4.0	4.0	4.0	6.0	6.0		4.0	6.0	
Vehicle Extension (s)	3.0	3.0		3.0	3.0	3.0	3.0	3.0		3.0	3.0	
Lane Grp Cap (vph)	285	551		371	573	487	348	1224		320	1507	
v/s Ratio Prot	c0.13	0.21		0.09				c0.17		0.01	c0.10	
v/s Ratio Perm	c0.31			0.24	0.26	0.02	0.12			0.08		
v/c Ratio	1.01	0.69		0.78	0.86	0.06	0.33	0.46		0.19	0.22	
Uniform Delay, d1	34.3	36.5		25.5	39.1	29.3	27.8	29.3		19.6	20.0	
Progression Factor	1.00	1.00		1.00	0.94	0.72	1.00	1.00		1.00	1.00	
Incremental Delay, d2	55.1	3.5		10.0	11.8	0.0	2.5	1.3		0.3	0.3	
Delay (s)	89.4	40.0		35.6	48.6	21.0	30.3	30.6		19.9	20.3	
Level of Service	F	D		D	D	C	C	C		B	C	
Approach Delay (s)		61.0			41.5			30.5			20.3	
Approach LOS		E			D			C			C	

Intersection Summary

HCM Average Control Delay	39.9	HCM Level of Service	D
HCM Volume to Capacity ratio	0.71		
Actuated Cycle Length (s)	120.0	Sum of lost time (s)	16.0
Intersection Capacity Utilization	72.7%	ICU Level of Service	C
Analysis Period (min)	15		

c Critical Lane Group

Movement	EBL	EBT	EBR	WBL	WBT	WBR	NBL	NBT	NBR	SBL	SBT	SBR
Lane Configurations												
Volume (vph)	19	0	19	88	1	111	34	514	184	79	255	33
Ideal Flow (vphpl)	1900	1900	1900	1900	1900	1900	1900	1900	1900	1900	1900	1900
Total Lost time (s)		5.0			5.0	5.0		5.0	5.0		5.0	5.0
Lane Util. Factor		1.00			1.00	1.00		1.00	1.00		1.00	1.00
Frt		0.93			1.00	0.85		1.00	0.85		1.00	0.85
Flt Protected		0.98			0.95	1.00		1.00	1.00		0.99	1.00
Satd. Flow (prot)		1695			1775	1583		1857	1583		1841	1583
Flt Permitted		0.82			0.78	1.00		0.96	1.00		0.77	1.00
Satd. Flow (perm)		1421			1459	1583		1789	1583		1436	1583
Peak-hour factor, PHF	0.92	0.92	0.92	0.92	0.92	0.92	0.92	0.92	0.92	0.92	0.92	0.92
Adj. Flow (vph)	21	0	21	96	1	121	37	559	200	86	277	36
RTOR Reduction (vph)	0	19	0	0	0	108	0	0	39	0	0	7
Lane Group Flow (vph)	0	23	0	0	97	13	0	596	161	0	363	29
Turn Type	Perm			Perm		Perm	Perm		Perm	Perm		Perm
Protected Phases		4			8			2			6	
Permitted Phases	4			8		8	2		2	6		6
Actuated Green, G (s)		13.2			13.2	13.2		96.8	96.8		96.8	96.8
Effective Green, g (s)		13.2			13.2	13.2		96.8	96.8		96.8	96.8
Actuated g/C Ratio		0.11			0.11	0.11		0.81	0.81		0.81	0.81
Clearance Time (s)		5.0			5.0	5.0		5.0	5.0		5.0	5.0
Vehicle Extension (s)		3.0			3.0	3.0		3.0	3.0		3.0	3.0
Lane Grp Cap (vph)		156			160	174		1443	1277		1158	1277
v/s Ratio Prot												
v/s Ratio Perm		0.02			c0.07	0.01		c0.33	0.10		0.25	0.02
v/c Ratio		0.15			0.61	0.08		0.41	0.13		0.31	0.02
Uniform Delay, d1		48.3			50.9	47.9		3.4	2.5		3.0	2.3
Progression Factor		1.00			1.00	1.00		1.00	1.00		1.46	2.65
Incremental Delay, d2		0.4			6.4	0.2		0.9	0.2		0.1	0.0
Delay (s)		48.8			57.3	48.1		4.2	2.7		4.5	6.1
Level of Service		D			E	D		A	A		A	A
Approach Delay (s)		48.8			52.2			3.9			4.6	
Approach LOS		D			D			A			A	

Intersection Summary

HCM Average Control Delay	12.6	HCM Level of Service	B
HCM Volume to Capacity ratio	0.44		
Actuated Cycle Length (s)	120.0	Sum of lost time (s)	10.0
Intersection Capacity Utilization	68.1%	ICU Level of Service	C
Analysis Period (min)	15		

c Critical Lane Group

Movement	EBL	EBR	NBL	NBT	SBT	SBR
Lane Configurations						
Volume (veh/h)	13	36	38	813	373	11
Sign Control	Stop			Free	Free	
Grade	0%			0%	0%	
Peak Hour Factor	0.92	0.92	0.92	0.92	0.92	0.92
Hourly flow rate (vph)	14	39	41	884	405	12
Pedestrians				45	9	
Lane Width (ft)				12.0	12.0	
Walking Speed (ft/s)				4.0	4.0	
Percent Blockage				4	1	
Right turn flare (veh)						
Median type				None	None	
Median storage veh)						
Upstream signal (ft)						
pX, platoon unblocked						
vC, conflicting volume	1381	450	417			
vC1, stage 1 conf vol						
vC2, stage 2 conf vol						
vCu, unblocked vol	1381	450	417			
tC, single (s)	6.4	6.2	4.1			
tC, 2 stage (s)						
tF (s)	3.5	3.3	2.2			
p0 queue free %	91	93	96			
cM capacity (veh/h)	152	586	1142			

Direction, Lane #	EB 1	NB 1	SB 1	SB 2
Volume Total	53	925	405	12
Volume Left	14	41	0	0
Volume Right	39	0	0	12
cSH	333	1142	1700	1700
Volume to Capacity	0.16	0.04	0.24	0.01
Queue Length 95th (ft)	14	3	0	0
Control Delay (s)	17.8	1.0	0.0	0.0
Lane LOS	C	A		
Approach Delay (s)	17.8	1.0	0.0	
Approach LOS	C			

Intersection Summary			
Average Delay	1.3		
Intersection Capacity Utilization	86.1%	ICU Level of Service	E
Analysis Period (min)	15		

Movement	EBL	EBT	EBR	WBL	WBT	WBR	NBL	NBT	NBR	SBL	SBT	SBR
Lane Configurations												
Volume (vph)	10	0	22	117	5	51	34	1254	57	15	644	13
Ideal Flow (vphpl)	1900	1900	1900	1900	1900	1900	1900	1900	1900	1900	1900	1900
Total Lost time (s)		5.0		5.0	5.0		5.0	5.0		5.0	5.0	
Lane Util. Factor		1.00		1.00	1.00		1.00	0.95		1.00	0.95	
Frt		0.91		1.00	0.86		1.00	0.99		1.00	1.00	
Flt Protected		0.98		0.95	1.00		0.95	1.00		0.95	1.00	
Satd. Flow (prot)		1664		1770	1607		1770	3516		1770	3529	
Flt Permitted		0.91		0.73	1.00		0.38	1.00		0.14	1.00	
Satd. Flow (perm)		1540		1368	1607		708	3516		262	3529	
Peak-hour factor, PHF	0.92	0.92	0.92	0.92	0.92	0.92	0.92	0.92	0.92	0.92	0.92	0.92
Adj. Flow (vph)	11	0	24	127	5	55	37	1363	62	16	700	14
RTOR Reduction (vph)	0	21	0	0	48	0	0	2	0	0	1	0
Lane Group Flow (vph)	0	14	0	127	12	0	37	1423	0	16	713	0
Turn Type	Perm			Perm			Perm			pm+pt		
Protected Phases		4			8			2		1	6	
Permitted Phases	4			8			2			6		
Actuated Green, G (s)		15.2		15.2	15.2		88.4	88.4		95.8	95.8	
Effective Green, g (s)		15.2		15.2	15.2		88.4	88.4		95.8	95.8	
Actuated g/C Ratio		0.13		0.13	0.13		0.73	0.73		0.79	0.79	
Clearance Time (s)		5.0		5.0	5.0		5.0	5.0		5.0	5.0	
Vehicle Extension (s)		3.0		3.0	3.0		3.0	3.0		3.0	3.0	
Lane Grp Cap (vph)		193		172	202		517	2569		237	2794	
v/s Ratio Prot					0.01			c0.40		0.00	c0.20	
v/s Ratio Perm		0.01		c0.09			0.05			0.05		
v/c Ratio		0.07		0.74	0.06		0.07	0.55		0.07	0.26	
Uniform Delay, d1		46.7		51.0	46.6		4.6	7.4		5.0	3.3	
Progression Factor		1.00		1.00	1.00		1.00	1.00		1.00	1.00	
Incremental Delay, d2		0.2		15.2	0.1		0.3	0.9		0.1	0.2	
Delay (s)		46.8		66.2	46.7		4.9	8.2		5.1	3.5	
Level of Service		D		E	D		A	A		A	A	
Approach Delay (s)		46.8			60.0			8.2			3.5	
Approach LOS		D			E			A			A	

Intersection Summary

HCM Average Control Delay	11.3	HCM Level of Service	B
HCM Volume to Capacity ratio	0.58		
Actuated Cycle Length (s)	121.0	Sum of lost time (s)	15.0
Intersection Capacity Utilization	58.0%	ICU Level of Service	B
Analysis Period (min)	15		

c Critical Lane Group

APPENDIX

G

Site Trip Data

Montgomery County Public School and Montgomery County National Park and Planning Commission Traffic Flow in Webb Tract East

MCPS Division of Maintenance -- Daily Traffic Flow Estimates (Mon-Fri) **3/12/2009**

(Prepared by: Roy Higgins, Director, Division of Maintenance, 301-840-8107)

TIME	3:00	3:30	4:00	4:30	5:00	5:30	6:00	6:30	7:00	7:30	8:00	8:30	9:00	9:30	10:00	10:30	11:00	11:30	12:00	12:30	13:00	13:30	14:00	14:30	15:00	15:30	16:00	16:30	17:00	17:30	18:00	18:30	19:00	19:30	20:00	20:30	21:00	21:30	22:00	22:30	23:00	23:30	Total
Employee Vehs						4	40	15	40	6								2		3			25	45	20	30	5													25			**260**
MCPS Maint Vehs							2	25	15	4	2	4	3	5		2	3	2	1	2	4	20	14	7	5												4	8				**132**
Vendor Vehs													1	2		1		1			1																					**6**
Visitors											1	1	1	2	2	2	2				1																					**12**
																																											0
Total	**0**	**0**	**0**	**0**	**0**	**4**	**42**	**40**	**55**	**10**	**3**	**5**	**5**	**9**	**2**	**5**	**5**	**5**	**1**	**5**	**6**	**20**	**39**	**52**	**25**	**30**	**5**	**0**	**0**	**0**	**0**	**0**	**0**	**0**	**0**	**0**	**0**	**4**	**8**	**25**	**0**	**0**	**410**

NOTES:
Employee Vehicles = Typically Less than 1-Ton Capacity
MCPS Maint Vehs = 70-85% 1-Ton Capacity or Less; 15-30% Larger than 1-Ton Capacity (Typically up to 2-1/2-Ton)
Vendor Vehs = Typically 1/2-Ton to 5-Ton Capacity
Visitors = Typically Less than 1-Ton Capacity

Traffic Flow for MCPS Food Nutrition Services

	3:00	3:30	4:00	4:30	5:00	5:30	6:00	6:30	7:00	7:30	8:00	8:30	9:00	9:30	10:00	10:30	11:00	11:30	12:00	12:30	13:00	13:30	14:00	14:30	15:00	15:30	16:00	16:30	17:00	17:30	18:00	18:30	19:00	19:30	20:00	20:30	21:00	21:30	0:00	22:30	23:00	23:30	0
Employee	7				4	54	10	31	7	11	6	2	3				7				4	1	45	40	11	7	6	6	2														**264**
MCPS FS Trucks						1		17				1								1		8	8																				**36**
Vendor Trucks						1	1		2	2	1	1	1	1	1	1	1	1	1	1	1		1																				**18**
Service Trucks												**1**				**1**																											**2**
Traffic Flow For Webb Tract Site																																											**0**
																																											0
Total	**7**	**0**	**0**	**0**	**4**	**56**	**11**	**48**	**9**	**13**	**7**	**5**	**4**	**1**	**1**	**2**	**8**	**1**	**1**	**2**	**5**	**9**	**54**	**40**	**11**	**7**	**6**	**6**	**2**	**0**	**0**	**0**	**0**	**0**	**0**	**0**	**0**	**0**	**0**	**0**	**0**	**0**	**320**

NOTES:
MCPS Trucks = 28 feet
Vendor Trucks = 28 feet or semi-trailers
Service Trucks = Maintenance vehicles
Vendor trucks arrive at the facility, are offloaded (we allow 1 hour) and then leave. Receiving is scheduled between the hours of 7:00 a.m. and 1:30 p.m. On average, there are 10 vendor trucks a day. This number fluctuates depending on the time of year, with more trucks in August and September. The departure of the vendor trucks is identified in yellow.

MNCPPC Shady Grove Central Maintenance Division

MNCPPC - Central Maintenance Division Daily Traffic Flow Estimates (Mon-Fri)

(Prepared by: Al Astorga-Central Maintenance Division Chief)

TIME	3:00	3:30	4:00	4:30	5:00	5:30	6:00	6:30	7:00	7:30	8:00	8:30	9:00	9:30	10:00	10:30	11:00	11:30	12:00	12:30	13:00	13:30	14:00	14:30	15:00	15:30	16:00	16:30	17:00	17:30	18:00	18:30	19:00	19:30	20:00	20:30	21:00	21:30	22:00	22:30	23:00	23:30	Total
Emp. Vehs						5	120																		120		5																**250**
MNCPPC Maint. Vehs								19	16	12	7	9	8	3	15	17	13	11	10	14	22	14	28	31	18																		**267**
Vendor Vehs											2	4	0		3		5	1	4	1	2	1	4	1																			**28**
Visitors																1																											**1**
Total	**0**	**0**	**0**	**0**	**0**	**5**	**120**	**19**	**16**	**12**	**9**	**13**	**8**	**3**	**18**	**18**	**18**	**12**	**14**	**15**	**24**	**15**	**32**	**32**	**138**	**0**	**5**	**0**	**0**	**0**	**0**	**0**	**0**	**0**	**0**	**0**	**0**	**0**	**0**	**0**	**0**	**0**	**546**

NOTES:
Employee Vehicles = Typically Less than 1-Ton Capacity
MNCPPC Maint Vehs = 50 - 60% 1-Ton Capacity or Less; 30-40% Larger than 1-Ton Capacity (Typically up to 2-1/2-Ton)
Vendor Vehs = Typically 1/2 - Ton to 5 - Ton Capacity
Visitors = Typically Less than 1 - Ton Capacity

	3:00	3:30	4:00	4:30	5:00	5:30	6:00	6:30	7:00	7:30	8:00	8:30	9:00	9:30	10:00	10:30	11:00	11:30	12:00	12:30	13:00	13:30	14:00	14:30	15:00	15:30	16:00	16:30	17:00	17:30	18:00	18:30	19:00	19:30	20:00	20:30	21:00	21:30	22:00	22:30	23:00	23:30	Total
Traffic Flow For Webb Tract East	**7**	**0**	**0**	**0**	**4**	**65**	**173**	**107**	**80**	**35**	**19**	**23**	**17**	**13**	**21**	**25**	**31**	**18**	**16**	**22**	**35**	**44**	**125**	**124**	**174**	**37**	**16**	**6**	**2**	**0**	**0**	**0**	**0**	**0**	**0**	**0**	**0**	**4**	**8**	**25**	**0**	**0**	**1276**

Montgomery County Public Safety Training Academy Traffic Flow in Webb Tract West

Traffic Flow For PSTA																																											
																																											Total
Time	**3:00**	**3:30**	**4:00**	**4:30**	**5:00**	**5:30**	**6:00**	**6:30**	**7:00**	**7:30**	**8:00**	**8:30**	**9:00**	**9:30**	**10:00**	**10:30**	**11:00**	**11:30**	**12:00**	**12:30**	**13:00**	**13:30**	**14:00**	**14:30**	**15:00**	**15:30**	**16:00**	**16:30**	**17:00**	**17:30**	**18:00**	**18:30**	**19:00**	**19:30**	**20:00**	**20:30**	**21:00**	**21:30**	**22:00**	**22:30**	**23:00**	**23:30**	
Employee					5		44	6	41		10							10		10				8	30	42	10		16		10									7		3	**252**
Visitor/Student							20	50	40	102		30	1				1		170		130			20			130		42	50	40		210					40	220		30		**1326**
Delivery Trucks													5	2	2	3	2			4																							**18**
Fire Trucks											4		2					4	4	1				2					5			10								10			**42**
School Bus																14	14				14	14																					**56**
Ride On Bus							5																	5																			**10**
Total	**0**	**0**	**0**	**0**	**5**	**0**	**69**	**56**	**81**	**102**	**14**	**30**	**8**	**2**	**2**	**17**	**17**	**14**	**174**	**15**	**144**	**14**	**0**	**35**	**30**	**42**	**140**	**0**	**63**	**50**	**50**	**10**	**210**	**0**	**0**	**0**	**0**	**40**	**220**	**17**	**30**	**3**	**1704**
Delivery Trucks = 28 feet																																											
Fire Trucks = 54 feet																																											
School Bus = 40 feet																																											
Ride On Bus = 40 feet																																											
Yellow highlight defines departure																																											
Orange highlight defines arrival and departure																																											
	3:00	**3:30**	**4:00**	**4:30**	**5:00**	**5:30**	**6:00**	**6:30**	**7:00**	**7:30**	**8:00**	**8:30**	**9:00**	**9:30**	**10:00**	**10:30**	**11:00**	**11:30**	**12:00**	**12:30**	**13:00**	**13:30**	**14:00**	**14:30**	**15:00**	**15:30**	**16:00**	**16:30**	**17:00**	**17:30**	**18:00**	**18:30**	**19:00**	**19:30**	**20:00**	**20:30**	**21:00**	**21:30**	**22:00**	**22:30**	**23:00**	**23:30**	**Total**
Traffic Flow For Webb Tract West	**0**	**0**	**0**	**0**	**5**	**0**	**69**	**56**	**81**	**102**	**14**	**30**	**8**	**2**	**2**	**17**	**17**	**14**	**174**	**15**	**144**	**14**	**0**	**35**	**30**	**42**	**140**	**0**	**63**	**50**	**50**	**10**	**210**	**0**	**0**	**0**	**0**	**40**	**220**	**17**	**30**	**3**	**1704**
Time	**3:00**	**3:30**	**4:00**	**4:30**	**5:00**	**5:30**	**6:00**	**6:30**	**7:00**	**7:30**	**8:00**	**8:30**	**9:00**	**9:30**	**10:00**	**10:30**	**11:00**	**11:30**	**12:00**	**12:30**	**13:00**	**13:30**	**14:00**	**14:30**	**15:00**	**15:30**	**16:00**	**16:30**	**17:00**	**17:30**	**18:00**	**18:30**	**19:00**	**19:30**	**20:00**	**20:30**	**21:00**	**21:30**	**22:00**	**22:30**	**23:00**	**23:30**	**Total**
Traffic Flow For Webb Tract Site	**7**	**0**	**0**	**0**	**9**	**65**	**242**	**163**	**161**	**137**	**33**	**53**	**25**	**15**	**23**	**42**	**48**	**32**	**190**	**37**	**179**	**58**	**125**	**159**	**204**	**79**	**156**	**6**	**65**	**50**	**50**	**10**	**210**	**0**	**0**	**0**	**0**	**44**	**228**	**42**	**30**	**3**	**2980**

Route Protocol
Purpose and Definition

1. As the County moves ahead with the Smart Growth Initiative and the Shady Grove Metro area development, numerous dislocations and relocations of County facilities will be necessary. The County plans include taking over the Webb Tract adjacent to Montgomery Village to accommodate some of these relocations including the Public Safety Training Academy, the MCPS Food Distribution Warehouse, the County Parks Department Facility Maintenance Complex, and the School System's Maintenance Operation.

2. The "no drive zones" would serve to insulate the community from the effects of these traffic impacts by specifying the streets to be avoided by delivery trucks and other vehicles coming and going from the Webb Tract. The streets to avoid include Centerway Road, Goshen Road, Montgomery Village Avenue, Wightman Road, Lewisberry Road, and East Village Avenue.

3. The Route Protocol would implement the "no drive zones" by providing explicit shipping and receiving instructions including route instructions for arrivals and departures at the Webb Tract. The Route Protocol for arrivals would instruct trucks destined for the Webb Tract to take I-270 or Route 355 to Shady Grove and then to Snouffer School Road. The Route Protocol for departures would instruct the driver to exit left on Snouffer School Road, proceed past Centerway to Route 124 and then to Shady Grove Road.[1]

4 Two specific exceptions from complying with the Route Protocol Policy are identified as Personal Patrol Vehicles (PPV) and Fire Trucks on call.

---

[1] Source of arrival and departure routes: Bob Hydorn's President's Message, "Webb Tract traffic concerns", Montgomery Village News, July 10, 2009.

APPENDIX

H

Future CLV Analysis Worksheets
Future Synchro/SimTraffic Analysis Worksheets

Critical Lane Volume Methodology
Turning Movement Summary and Level of Service

Prepared by: **STV Inc.**

Count Date: 3/31/2009
Conditions: Future
Design Year: 2012

Location: Snouffer School Road at MD 124 (Woodfield Road)
Computed by: ADB
Date 11/17/2009

Morning Peak Hour: 7:30-8:30 AM

Evening Peak Hour: 4:45-5:45 PM

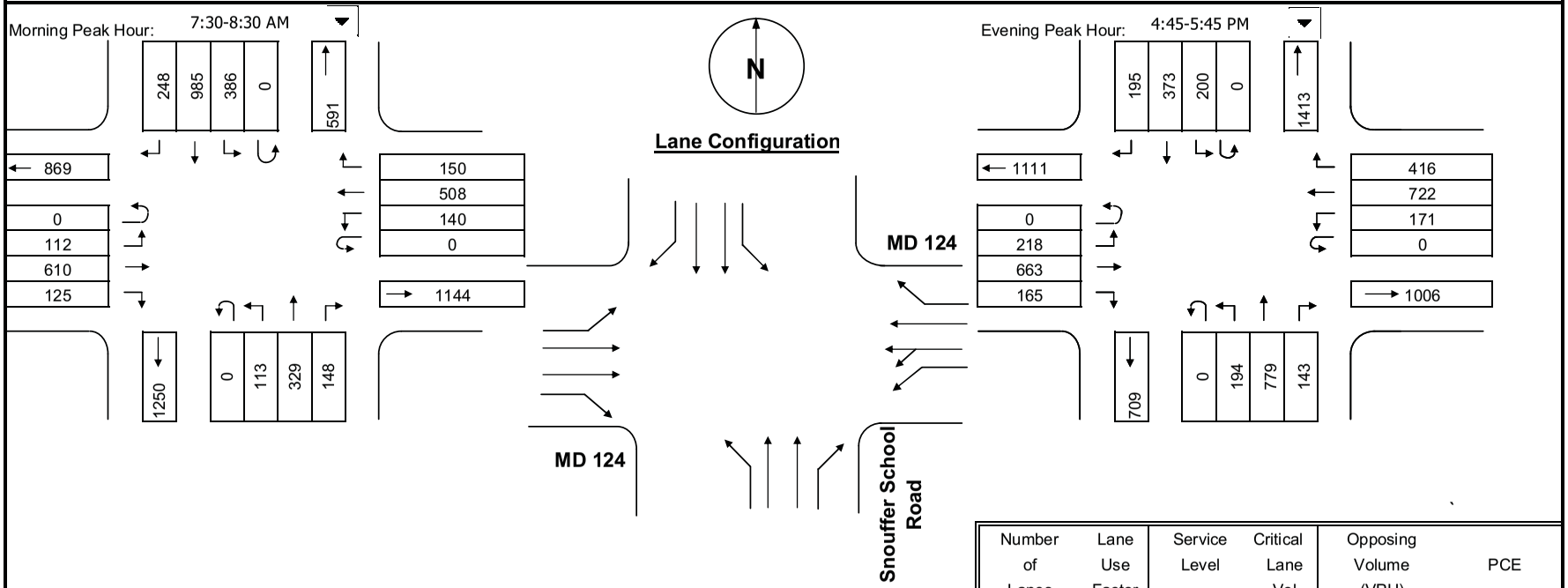

Number of Lanes	Lane Use Factor	Service Level	Critical Lane Vol	Opposing Volume (VPH)	PCE
1 =	1.00	A	<= 1000	<= 199	1.1
2 =	0.53	B	<= 1150	<= 599	2.0
3 =	0.37	C	<= 1300	<= 799	3.0
4 =	0.30	D	<= 1450	<= 999	4.0
5 =	0.25	E	<= 1600	> 1000	5.0
		F	> 1600		

Phasing

RTOR/Overlap
- ☐ Northbound
- ☐ Southbound
- ☐ Eastbound
- ☐ Westbound

Split Phasing
- ◉ East/West
- ○ North/South
- ○ None

Inx. Control
- ◉ Signal
- ○ Stop

Phase	Movement	Volume 1	Lane Use Factor - 2	Lane volume 1 X 2	Opposing Movement	Critical In. volume	*	Phase	Movement	Volume 1	Lane Use Factor - 2	Lane volume 1 X 2	Opposing Movement	Critical In. Volume	*
	NB	329	0.53	174	386	560			NB	779	0.53	413	200	613	*
	SB	985	0.53	522	113	635	*		SB	373	0.53	198	194	392	
	EB	610	0.53	323	0	323	*		EB	663	0.53	351	0	351	*
	WB	648	0.40	259	0	259	*		WB	893	0.40	357	0	357	*
Remarks:			* Critical volume		Total	**1218**		Remarks:			* Critical volume		Total	**1321**	
						0.76	**C**							**0.83**	**D**

Critical Lane Volume Methodology
Turning Movement Summary and Level of Service

Prepared by: **STV Inc.**

Count Date: 10/1/2009
Conditions: Future
Design Year: 2012

Location: Snouffer School Road at Mooney Drive
Computed by: ADB
Date 11/17/2009

Morning Peak Hour: 7:15-8:15 AM

Evening Peak Hour: 4:45-5:45 PM

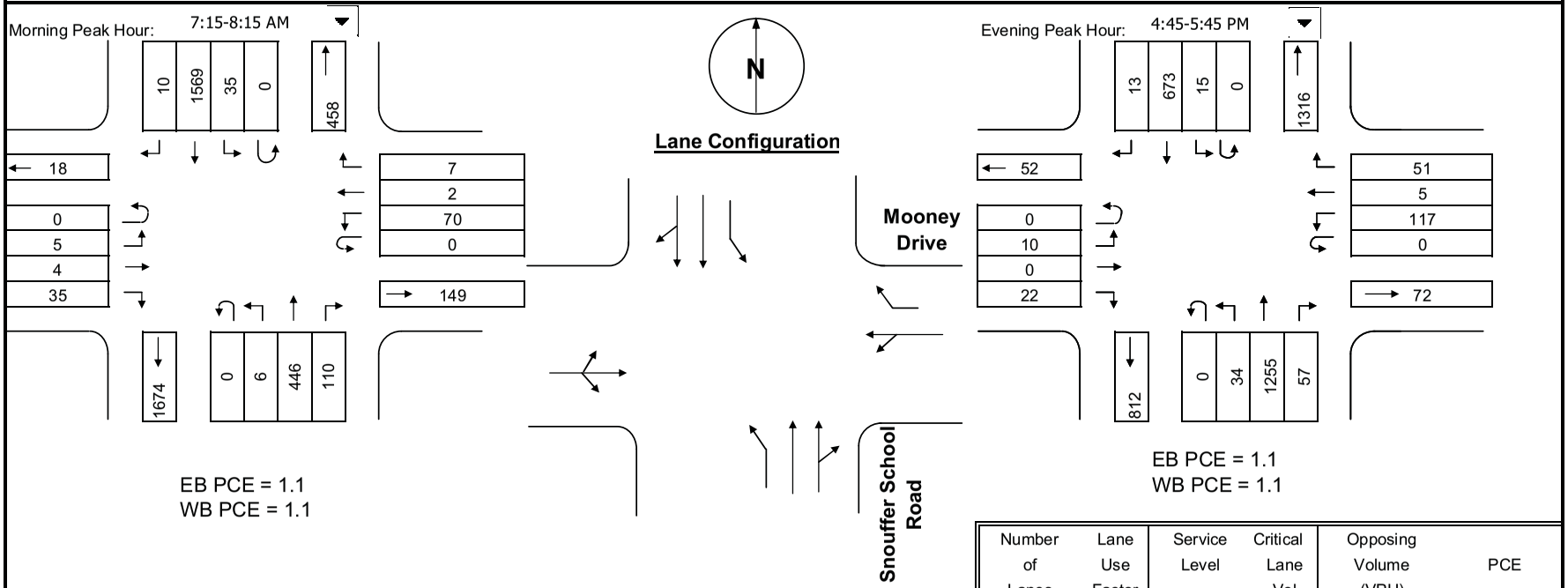

Number of Lanes	Lane Use Factor	Service Level	Critical Lane Vol	Opposing Volume (VPH)	PCE
1 = 1.00		A <= 1000		<= 199	1.1
2 = 0.53		B <= 1150		<= 599	2.0
3 = 0.37		C <= 1300		<= 799	3.0
4 = 0.30		D <= 1450		<= 999	4.0
5 = 0.25		E <= 1600		> 1000	5.0
		F > 1600			

Phasing

RTOR/Overlap
- ☐ Northbound
- ☐ Southbound
- ☐ Eastbound
- ☐ Westbound

Split Phasing
- ○ East/West
- ○ North/South
- ◉ None

Inx. Control
- ◉ Signal
- ○ Stop

Phase	Movement	Volume 1	Lane Use Factor - 2	Lane volume 1 X 2	Opposing Movement	Critical In. volume	*	Phase	Movement	Volume 1	Lane Use Factor - 2	Lane volume 1 X 2	Opposing Movement	Critical In. Volume	*
	NB	556	0.53	295	35	330			NB	1312	0.53	695	15	710	*
	SB	1579	0.53	837	6	843	*		SB	686	0.53	364	34	398	
	EB	45	1.00	45	70	115	*		EB	33	1.00	33	117	150	*
	WB	79	1.00	79	5	84			WB	134	1.00	134	10	144	
Remarks:			* Critical volume		Total	**957**		Remarks:			* Critical volume		Total	**860**	
						0.60	**A**							**0.54**	**A**

Critical Lane Volume Methodology
Turning Movement Summary and Level of Service

Prepared by: **STV Inc.**

Count Date: 2/26/2009
Conditions: Future
Design Year: 2012

Location: Snouffer School Road at Centerway Road
Computed by: ADB
Date 11/17/2009

Morning Peak Hour: 7:00-8:00 AM

Evening Peak Hour: 5:00-6:00 PM

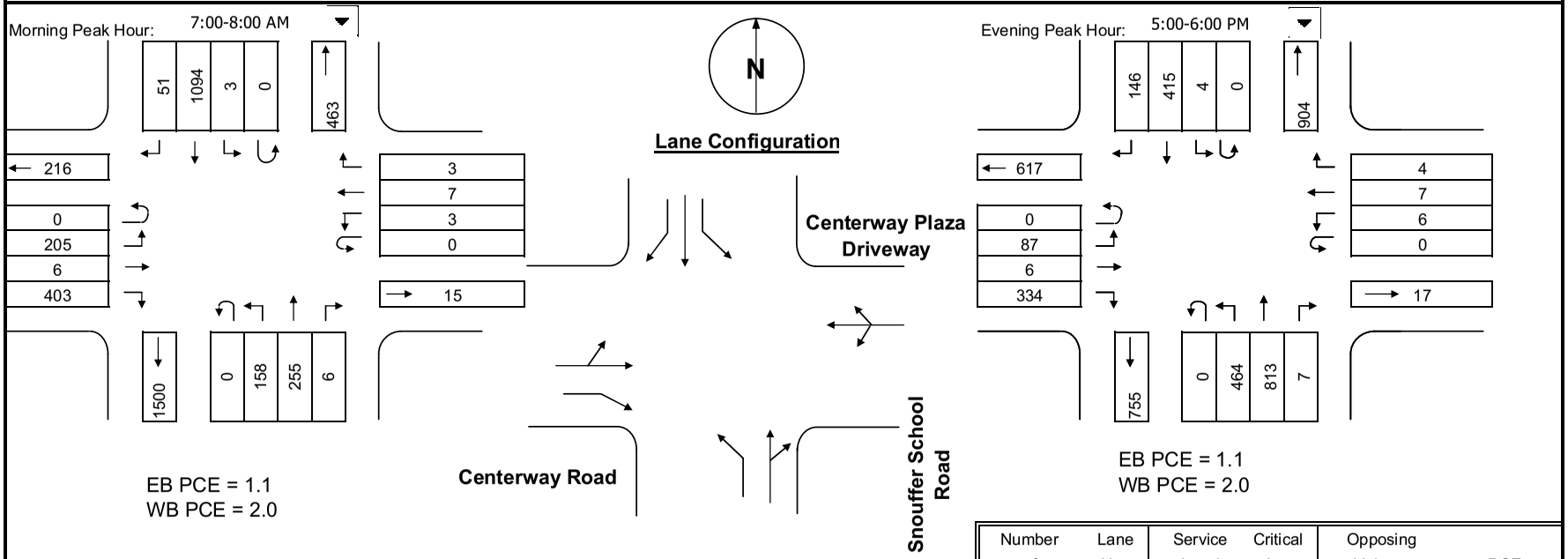

Number of Lanes	Lane Use Factor	Service Level	Critical Lane Vol	Opposing Volume (VPH)	PCE
1 = 1.00		A <= 1000		<= 199	1.1
2 = 0.53		B <= 1150		<= 599	2.0
3 = 0.37		C <= 1300		<= 799	3.0
4 = 0.30		D <= 1450		<= 999	4.0
5 = 0.25		E <= 1600		> 1000	5.0
		F > 1600			

Phasing

RTOR/Overlap
- ☐ Northbound
- ☐ Southbound
- ☑ Eastbound
- ☐ Westbound

Split Phasing
- ○ East/West
- ○ North/South
- ◉ None

Inx. Control
- ◉ Signal
- ○ Stop

Phase	Movement	Volume 1	Lane Use Factor - 2	Lane volume 1 X 2	Opposing Movement	Critical In. volume	*	Phase	Movement	Volume 1	Lane Use Factor - 2	Lane volume 1 X 2	Opposing Movement	Critical In. Volume	*
	NB	261	1.00	261	3	264			NB	820	1.00	820	4	824	
	SB	1094	1.00	1094	158	1252	*		SB	415	1.00	415	464	879	*
	EB	245	1.00	245	3	248	*		EB	102	1.00	102	6	108	*
	WB	16	1.00	16	205	221			WB	18	1.00	18	87	105	
Remarks:			* Critical volume		Total	**1500**		Remarks:			* Critical volume		Total	**987**	
						0.94	**E**							**0.62**	**A**

Critical Lane Volume Methodology
Turning Movement Summary and Level of Service

Prepared by: **STV Inc.**

Count Date: 10/6/2009
Conditions: Future
Design Year: 2012

Location: Snouffer School Road at Alliston Hollow Way
Computed by: ADB
Date 11/17/2009

Morning Peak Hour: 6:45-7:45 AM

Evening Peak Hour: 5:00-6:00 PM

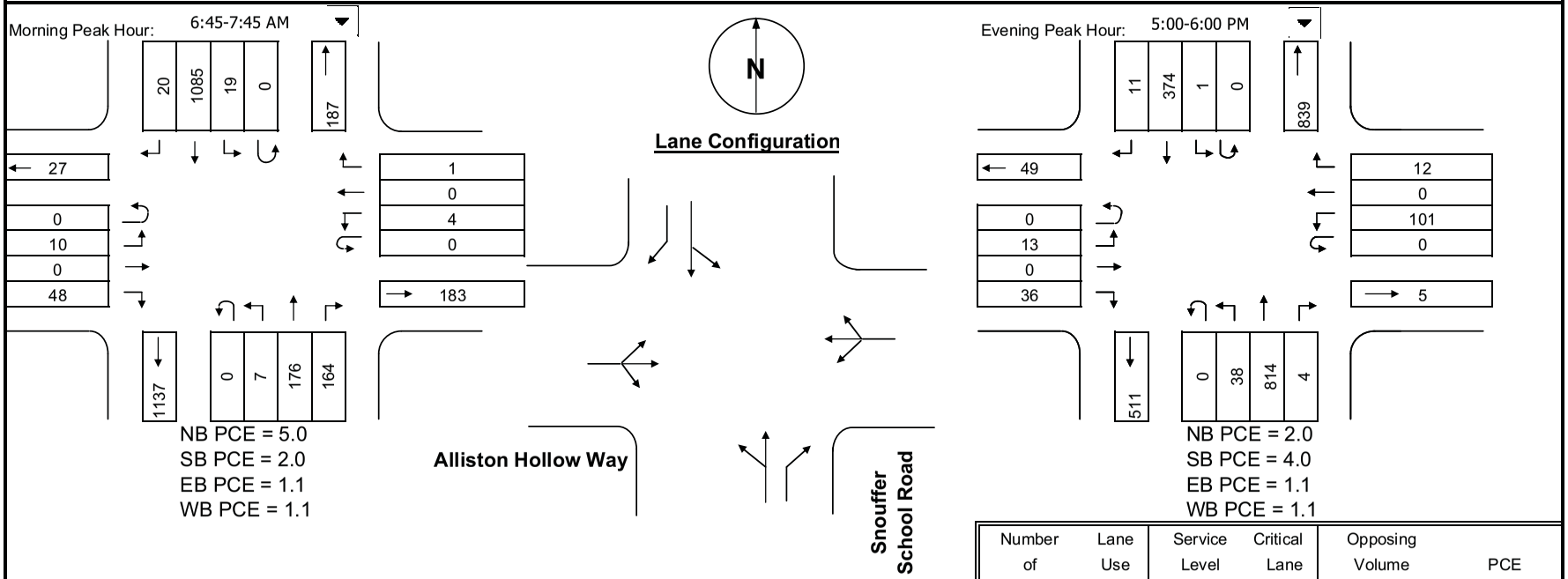

NB PCE = 5.0
SB PCE = 2.0
EB PCE = 1.1
WB PCE = 1.1

NB PCE = 2.0
SB PCE = 4.0
EB PCE = 1.1
WB PCE = 1.1

Number of Lanes	Lane Use Factor	Service Level	Critical Lane Vol	Opposing Volume (VPH)	PCE
1 = 1.00		A <= 1000		<= 199	1.1
2 = 0.53		B <= 1150		<= 599	2.0
3 = 0.37		C <= 1300		<= 799	3.0
4 = 0.30		D <= 1450		<= 999	4.0
5 = 0.25		E <= 1600		> 1000	5.0
		F > 1600			

Phasing

RTOR/Overlap
- ☐ Northbound
- ☐ Southbound
- ☐ Eastbound
- ☐ Westbound

Split Phasing
- ○ East/West
- ○ North/South
- ◉ None

Inx. Control
- ○ Signal
- ◉ Stop

Phase	Movement	Volume 1	Lane Use Factor - 2	Lane volume 1 X 2	Opposing Movement	Critical In. volume	*	Phase	Movement	Volume 1	Lane Use Factor - 2	Lane volume 1 X 2	Opposing Movement	Critical In. Volume	*
	NB	211	1.00	211	19	230			NB	890	1.00	890	1	891	*
	SB	1123	1.00	1123	7	1130	*		SB	378	1.00	378	38	416	
	EB	59	1.00	59	4	63	*		EB	50	1.00	50	101	151	*
	WB	5	1.00	5	10	15			WB	123	1.00	123	13	136	
Remarks:			* Critical volume		Total	**1193**		Remarks:			* Critical volume		Total	**1042**	
						0.75	**C**							**0.65**	**B**

Critical Lane Volume Methodology
Turning Movement Summary and Level of Service

Prepared by: **STV Inc.**

Count Date: 10/6/2009
Conditions: Future
Design Year: 2012

Location: Snouffer School Road at Turkey Thicket Drive/Site Driveway

Computed by: ADB

Date 11/17/2009

Morning Peak Hour: 6:45-7:45 AM

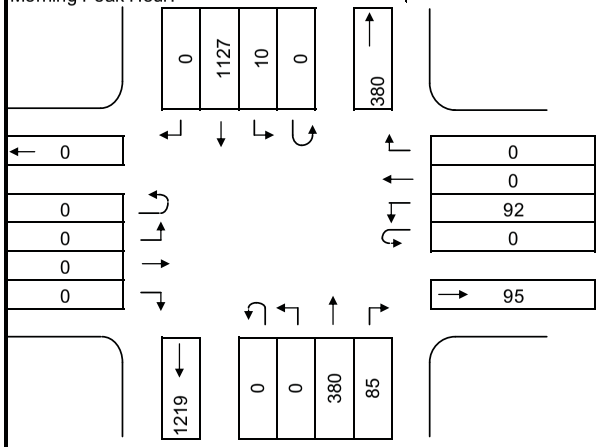

SB PCE = 2.0

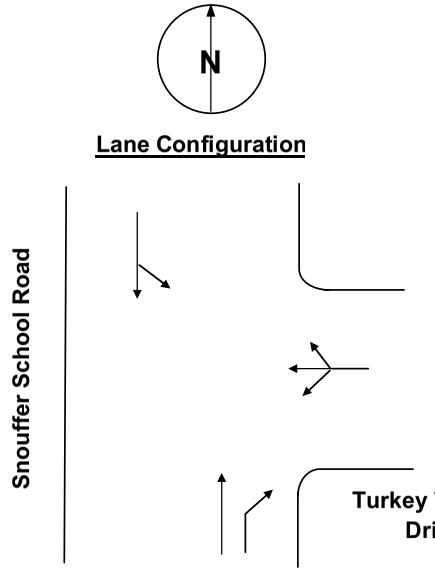

Evening Peak Hour: 5:00-6:00 PM

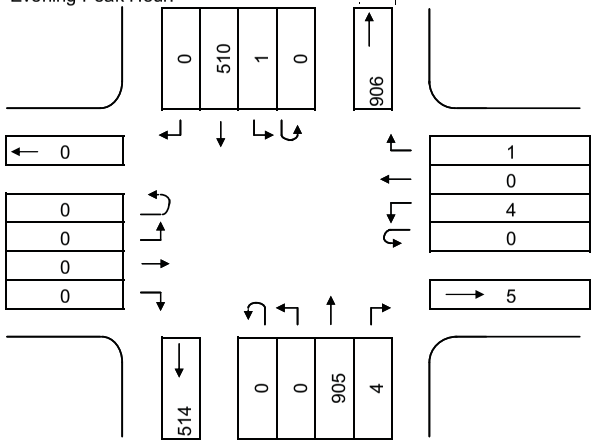

SB PCE = 4.0

Number of Lanes	Lane Use Factor	Service Level	Critical Lane Vol	Opposing Volume (VPH)	PCE
1 =	1.00	A	<= 1000	<= 199	1.1
2 =	0.53	B	<= 1150	<= 599	2.0
3 =	0.37	C	<= 1300	<= 799	3.0
4 =	0.30	D	<= 1450	<= 999	4.0
5 =	0.25	E	<= 1600	> 1000	5.0
		F	> 1600		

Phasing

RTOR/Overlap
- ☐ Northbound
- ☐ Southbound
- ☐ Eastbound
- ☐ Westbound

Split Phasing
- ○ East/West
- ○ North/South
- ◉ None

Inx. Control
- ○ Signal
- ◉ Stop

Phase	Movement	Volume 1	Lane Use Factor - 2	Lane volume 1 X 2	Opposing Movement	Critical In. volume	*	Phase	Movement	Volume 1	Lane Use Factor - 2	Lane volume 1 X 2	Opposing Movement	Critical In. Volume	*
	NB	380	1.00	380	10	390			NB	905	1.00	905	1	906	*
	SB	1147	1.00	1147	0	1147	*		SB	514	1.00	514	0	514	
	WB	92	1.00	92	0	92	*		WB	5	1.00	5	0	5	*
Remarks:			* Critical volume		Total	**1239**		Remarks:			* Critical volume		Total	**911**	
						0.77	**C**							**0.57**	**A**

Critical Lane Volume Methodology
Turning Movement Summary and Level of Service

Prepared by: **STV Inc.**

Count Date: 10/6/2009
Conditions: Future
Design Year: 2012

Location: Snouffer School Road at Lewisberry Drive
Computed by: ADB
Date 11/17/2009

Morning Peak Hour: 7:00-8:00 AM

Evening Peak Hour: 5:00-6:00 PM

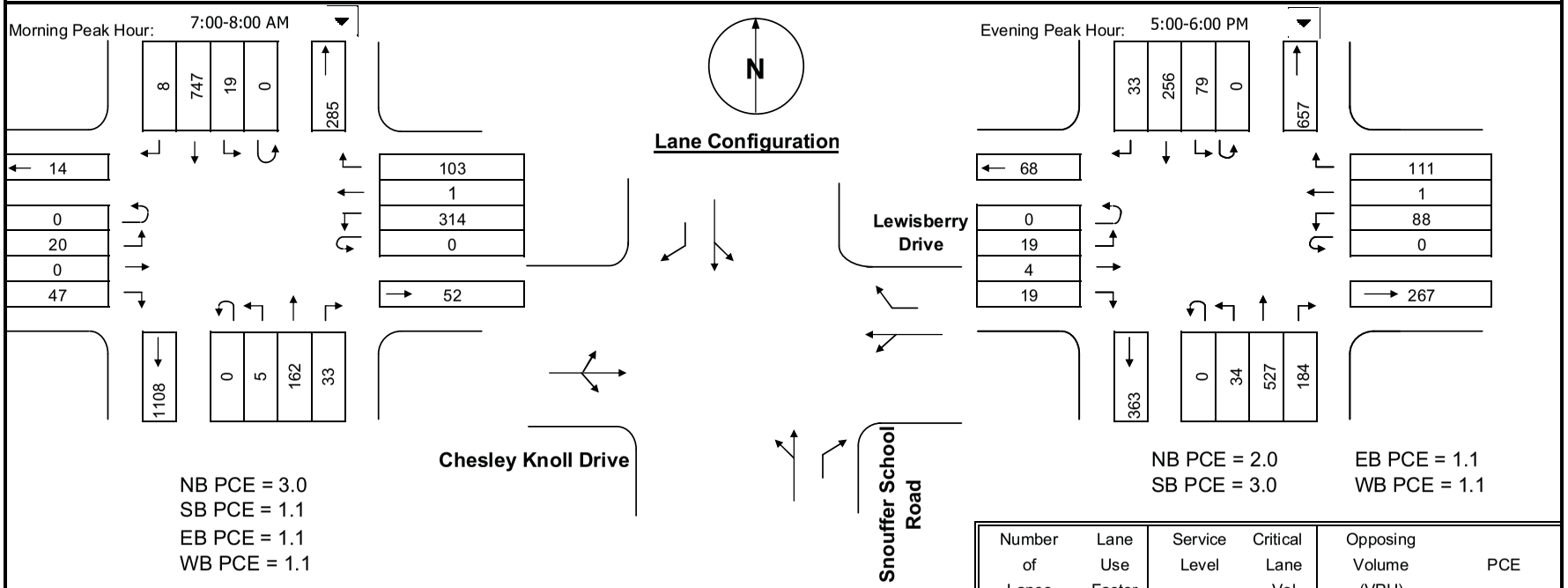

Number of Lanes	Lane Use Factor	Service Level	Critical Lane Vol	Opposing Volume (VPH)	PCE
1 = 1.00		A <= 1000		<= 199	1.1
2 = 0.53		B <= 1150		<= 599	2.0
3 = 0.37		C <= 1300		<= 799	3.0
4 = 0.30		D <= 1450		<= 999	4.0
5 = 0.25		E <= 1600		> 1000	5.0
		F > 1600			

Phasing

RTOR/Overlap
- ☐ Northbound
- ☐ Southbound
- ☐ Eastbound
- ☐ Westbound

Split Phasing
- ○ East/West
- ○ North/South
- ◉ None

Inx. Control
- ◉ Signal
- ○ Stop

Phase	Movement	Volume 1	Lane Use Factor - 2	Lane volume 1 X 2	Opposing Movement	Critical In. volume	*	Phase	Movement	Volume 1	Lane Use Factor - 2	Lane volume 1 X 2	Opposing Movement	Critical In. Volume	*
	NB	177	1.00	177	19	196			NB	595	1.00	595	79	674	*
	SB	768	1.00	768	5	773	*		SB	493	1.00	493	34	527	
	EB	69	1.00	69	314	383	*		EB	44	1.00	44	88	132	*
	WB	346	1.00	346	20	366			WB	98	1.00	98	19	117	
Remarks:			* Critical volume		Total	**1156**		Remarks:			* Critical volume		Total	**806**	
						0.72	**C**							**0.50**	**A**

Critical Lane Volume Methodology
Turning Movement Summary and Level of Service

Prepared by: **STV Inc.**

Count Date: 10/1/2009
Conditions: Future
Design Year: 2012

Location: Snouffer School Road at Goshen Road
Computed by: ADB
Date 11/17/2009

Morning Peak Hour: 6:45-7:45 AM

Evening Peak Hour: 5:00-6:00 PM

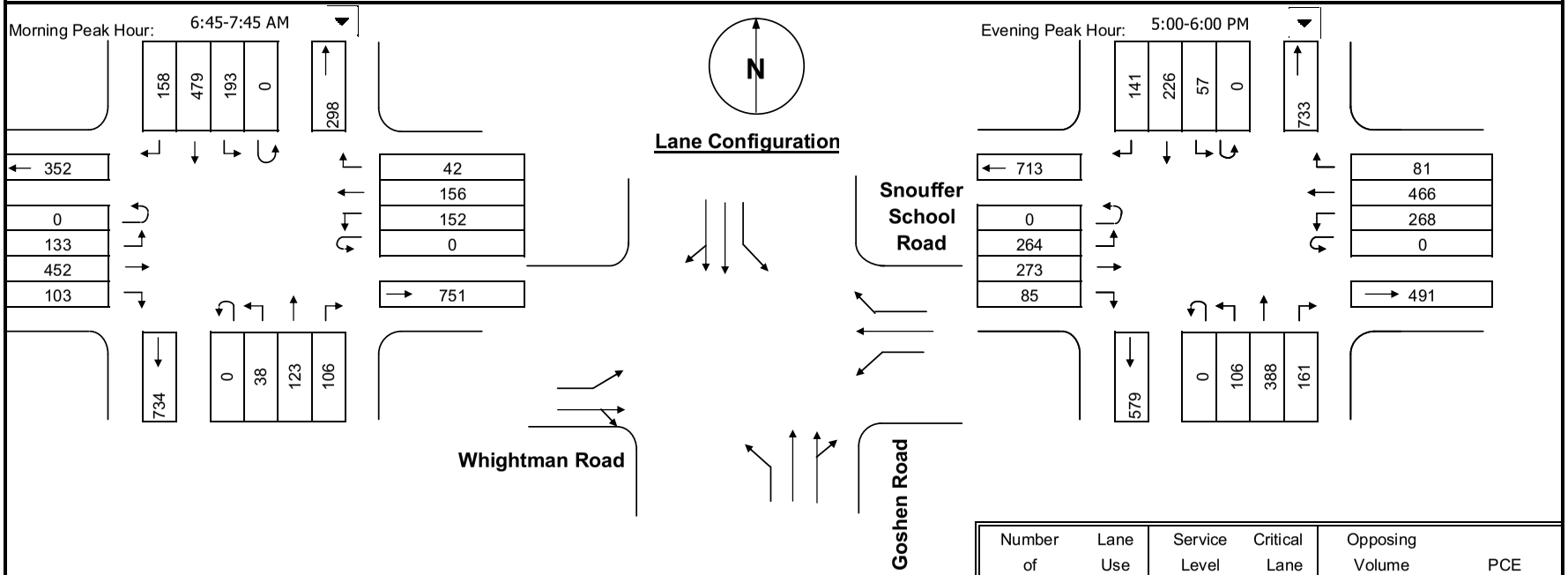

Number of Lanes	Lane Use Factor	Service Level	Critical Lane Vol	Opposing Volume (VPH)	PCE
1 = 1.00		A <= 1000		<= 199	1.1
2 = 0.53		B <= 1150		<= 599	2.0
3 = 0.37		C <= 1300		<= 799	3.0
4 = 0.30		D <= 1450		<= 999	4.0
5 = 0.25		E <= 1600		> 1000	5.0
		F > 1600			

Phasing

RTOR/Overlap
- ☐ Northbound
- ☐ Southbound
- ☐ Eastbound
- ☐ Westbound

Split Phasing
- ○ East/West
- ○ North/South
- ◉ None

Inx. Control
- ◉ Signal
- ○ Stop

Phase	Movement	Volume 1	Lane Use Factor - 2	Lane volume 1 X 2	Opposing Movement	Critical In. volume	*	Phase	Movement	Volume 1	Lane Use Factor - 2	Lane volume 1 X 2	Opposing Movement	Critical In. Volume	*
	NB	229	0.53	121	193	314			NB	549	0.53	291	57	348	*
	SB	637	0.53	338	38	376	*		SB	367	0.53	195	106	301	
	EB	555	1.00	555	152	707	*		EB	358	1.00	358	268	626	
	WB	156	1.00	156	133	289			WB	466	1.00	466	264	730	*
Remarks:			* Critical volume		Total	**1083**		Remarks:			* Critical volume		Total	**1078**	
						0.68	**B**							**0.67**	**B**

Critical Lane Volume Methodology
Turning Movement Summary and Level of Service

Prepared by: **STV Inc.**

Count Date: 9/30/2009
Conditions: Future
Design Year: 2012

Location: Centerway Road at Goshen Road
Computed by: MMO
Date 11/17/2009

Morning Peak Hour: 7:30-8:30 AM

Evening Peak Hour: 5:00-6:00 PM

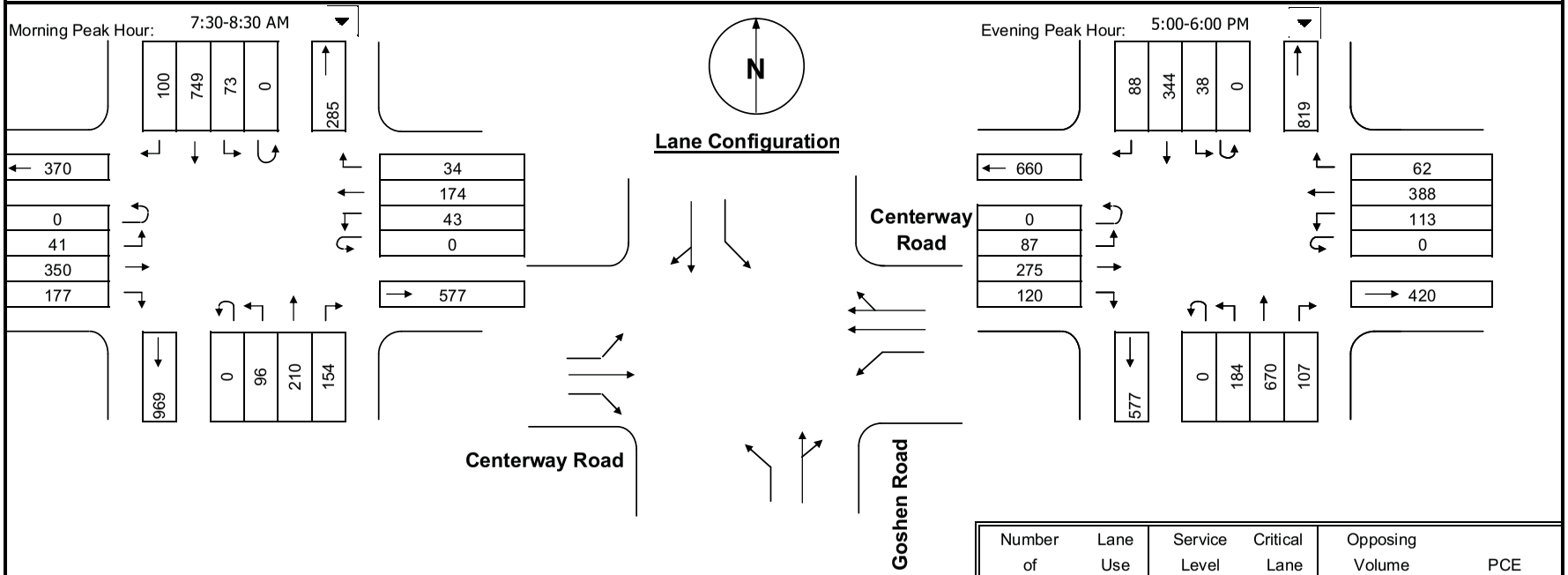

Number of Lanes	Lane Use Factor	Service Level	Critical Lane Vol	Opposing Volume (VPH)	PCE
1 = 1.00		A <= 1000		<= 199	1.1
2 = 0.53		B <= 1150		<= 599	2.0
3 = 0.37		C <= 1300		<= 799	3.0
4 = 0.30		D <= 1450		<= 999	4.0
5 = 0.25		E <= 1600		> 1000	5.0
		F > 1600			

Phasing

RTOR/Overlap
- ☐ Northbound
- ☐ Southbound
- ☐ Eastbound
- ☐ Westbound

Split Phasing
- ○ East/West
- ○ North/South
- ◉ None

Inx. Control
- ◉ Signal
- ○ Stop

Phase	Movement	Volume 1	Lane Use Factor - 2	Lane volume 1 X 2	Opposing Movement	Critical In. volume	*	Phase	Movement	Volume 1	Lane Use Factor - 2	Lane volume 1 X 2	Opposing Movement	Critical In. Volume	*
	NB	364	1.00	364	73	437			NB	777	1.00	777	38	815	*
	SB	849	1.00	849	96	945	*		SB	432	1.00	432	184	616	
	EB	350	1.00	350	43	393	*		EB	275	1.00	275	113	388	*
	WB	208	0.53	110	41	151			WB	450	0.53	239	87	326	
Remarks:			* Critical volume		Total	**1338**		Remarks:			* Critical volume		Total	**1203**	
						0.84	**D**							**0.75**	**C**

Critical Lane Volume Methodology
Turning Movement Summary and Level of Service

Prepared by: **STV Inc.**

Count Date: 9/30/2009
Conditions: Future
Design Year: 2012

Location: Centerway Road at Montgomery Village Avenue
Computed by: MMO
Date 11/17/2009

Morning Peak Hour: 7:30-8:30 AM

Evening Peak Hour: 5:00-6:00 PM

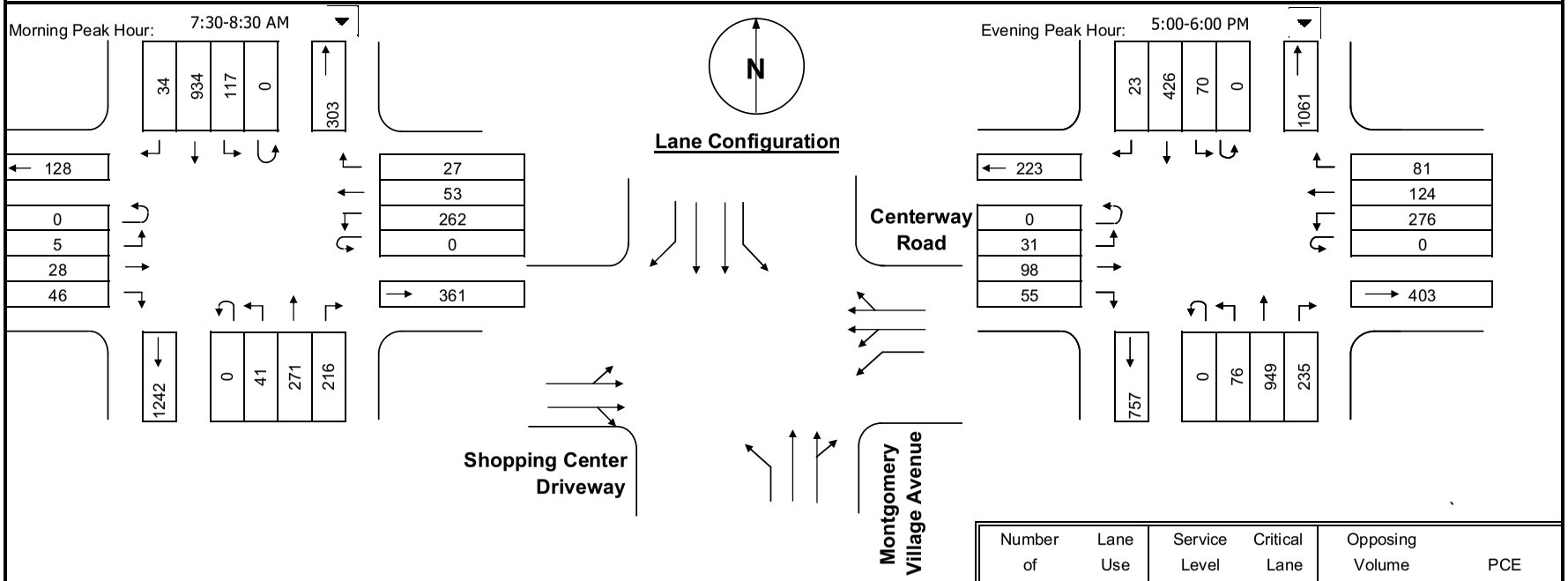

Number of Lanes	Lane Use Factor	Service Level	Critical Lane Vol	Opposing Volume (VPH)	PCE
1 =	1.00	A	<= 1000	<= 199	1.1
2 =	0.53	B	<= 1150	<= 599	2.0
3 =	0.37	C	<= 1300	<= 799	3.0
4 =	0.30	D	<= 1450	<= 999	4.0
5 =	0.25	E	<= 1600	> 1000	5.0
		F	> 1600		

Phasing

RTOR/Overlap
- ☐ Northbound
- ☐ Southbound
- ☐ Eastbound
- ☐ Westbound

Split Phasing
- ◉ East/West
- ○ North/South
- ○ None

Inx. Control
- ◉ Signal
- ○ Stop

Phase	Movement	Volume 1	Lane Use Factor - 2	Lane volume 1 X 2	Opposing Movement	Critical In. volume	*	Phase	Movement	Volume 1	Lane Use Factor - 2	Lane volume 1 X 2	Opposing Movement	Critical In. Volume	*
	NB	487	0.53	258	117	375			NB	1184	0.53	628	70	698	*
	SB	934	0.53	495	41	536	*		SB	426	0.53	226	76	302	
	EB	79	0.53	42	0	42	*		EB	184	0.53	98	0	98	*
	WB	342	0.40	137	0	137	*		WB	481	0.40	192	0	192	*
Remarks:			* Critical volume		Total	**715**		Remarks:			* Critical volume		Total	**987**	
						0.45	**A**							**0.62**	**A**

Movement	EBL	EBT	EBR	WBL	WBT	WBR	NBL	NBT	NBR	SBL	SBT	SBR
Lane Configurations												
Volume (vph)	5	28	46	262	53	27	41	271	216	117	934	34
Ideal Flow (vphpl)	1900	1900	1900	1900	1900	1900	1900	1900	1900	1900	1900	1900
Total Lost time (s)		7.0		7.0	7.0		7.0	7.0		7.0	7.0	7.0
Lane Util. Factor		0.95		0.91	0.91		1.00	0.95		1.00	0.91	0.91
Frt		0.91		1.00	0.98		1.00	0.93		1.00	1.00	0.85
Flt Protected		1.00		0.95	0.97		0.95	1.00		0.95	1.00	1.00
Satd. Flow (prot)		3217		1610	3226		1770	3304		1770	3388	1441
Flt Permitted		1.00		0.95	0.97		0.22	1.00		0.45	1.00	1.00
Satd. Flow (perm)		3217		1610	3226		407	3304		831	3388	1441
Peak-hour factor, PHF	0.92	0.92	0.92	0.92	0.92	0.92	0.92	0.92	0.92	0.92	0.92	0.92
Adj. Flow (vph)	5	30	50	285	58	29	45	295	235	127	1015	37
RTOR Reduction (vph)	0	46	0	0	10	0	0	79	0	0	0	13
Lane Group Flow (vph)	0	39	0	142	220	0	45	451	0	127	1019	20
Turn Type	Split			Split			Perm			Perm		Perm
Protected Phases	4	4		8	8			2			6	
Permitted Phases							2			6		6
Actuated Green, G (s)		10.0		15.2	15.2		73.8	73.8		73.8	73.8	73.8
Effective Green, g (s)		10.0		15.2	15.2		73.8	73.8		73.8	73.8	73.8
Actuated g/C Ratio		0.08		0.13	0.13		0.62	0.62		0.62	0.62	0.62
Clearance Time (s)		7.0		7.0	7.0		7.0	7.0		7.0	7.0	7.0
Vehicle Extension (s)		3.0		3.0	3.0		3.0	3.0		3.0	3.0	3.0
Lane Grp Cap (vph)		268		204	409		250	2032		511	2084	886
v/s Ratio Prot		c0.01		c0.09	0.07			0.14			c0.30	
v/s Ratio Perm							0.11			0.15		0.01
v/c Ratio		0.15		0.70	0.54		0.18	0.22		0.25	0.49	0.02
Uniform Delay, d1		51.0		50.2	49.1		10.0	10.3		10.5	12.7	9.0
Progression Factor		1.00		1.00	1.00		1.00	1.00		1.00	1.00	1.00
Incremental Delay, d2		0.3		9.9	1.4		1.6	0.3		1.2	0.8	0.0
Delay (s)		51.3		60.1	50.5		11.6	10.6		11.7	13.5	9.1
Level of Service		D		E	D		B	B		B	B	A
Approach Delay (s)		51.3			54.1			10.6			13.2	
Approach LOS		D			D			B			B	

Intersection Summary

HCM Average Control Delay	20.9	HCM Level of Service	C
HCM Volume to Capacity ratio	0.49		
Actuated Cycle Length (s)	120.0	Sum of lost time (s)	21.0
Intersection Capacity Utilization	65.9%	ICU Level of Service	C
Analysis Period (min)	15		

c Critical Lane Group

Movement	EBL	EBT	EBR	WBL	WBT	WBR	NBL	NBT	NBR	SBL	SBT	SBR
Lane Configurations												
Volume (vph)	41	350	177	43	174	34	96	210	154	73	749	100
Ideal Flow (vphpl)	1900	1900	1900	1900	1900	1900	1900	1900	1900	1900	1900	1900
Total Lost time (s)	5.0	5.0	5.0	5.0	5.0		5.0	5.0		5.0	5.0	
Lane Util. Factor	1.00	1.00	1.00	1.00	0.95		1.00	1.00		1.00	1.00	
Frt	1.00	1.00	0.85	1.00	0.98		1.00	0.94		1.00	0.98	
Flt Protected	0.95	1.00	1.00	0.95	1.00		0.95	1.00		0.95	1.00	
Satd. Flow (prot)	1770	1863	1583	1770	3452		1770	1745		1770	1830	
Flt Permitted	0.59	1.00	1.00	0.21	1.00		0.11	1.00		0.53	1.00	
Satd. Flow (perm)	1094	1863	1583	392	3452		206	1745		985	1830	
Peak-hour factor, PHF	0.92	0.92	0.92	0.92	0.92	0.92	0.92	0.92	0.92	0.92	0.92	0.92
Adj. Flow (vph)	45	380	192	47	189	37	104	228	167	79	814	109
RTOR Reduction (vph)	0	0	156	0	16	0	0	22	0	0	4	0
Lane Group Flow (vph)	45	380	36	47	210	0	104	373	0	79	919	0
Turn Type	Perm		Perm	Perm			pm+pt			Perm		
Protected Phases		4			8		5	2			6	
Permitted Phases	4		4	8			2			6		
Actuated Green, G (s)	19.0	19.0	19.0	19.0	19.0		71.0	71.0		59.6	59.6	
Effective Green, g (s)	19.0	19.0	19.0	19.0	19.0		71.0	71.0		59.6	59.6	
Actuated g/C Ratio	0.19	0.19	0.19	0.19	0.19		0.71	0.71		0.60	0.60	
Clearance Time (s)	5.0	5.0	5.0	5.0	5.0		5.0	5.0		5.0	5.0	
Vehicle Extension (s)	3.0	3.0	3.0	3.0	3.0		3.0	3.0		3.0	3.0	
Lane Grp Cap (vph)	208	354	301	74	656		246	1239		587	1091	
v/s Ratio Prot		c0.20			0.06		c0.03	0.21			c0.50	
v/s Ratio Perm	0.04		0.02	0.12			0.27			0.08		
v/c Ratio	0.22	1.07	0.12	0.64	0.32		0.42	0.30		0.13	0.84	
Uniform Delay, d1	34.2	40.5	33.6	37.3	34.9		15.4	5.3		8.9	16.4	
Progression Factor	1.00	1.00	1.00	1.00	1.00		1.00	1.00		1.00	1.00	
Incremental Delay, d2	0.5	68.8	0.2	16.5	0.3		1.2	0.6		0.5	7.9	
Delay (s)	34.7	109.3	33.8	53.8	35.2		16.6	6.0		9.3	24.3	
Level of Service	C	F	C	D	D		B	A		A	C	
Approach Delay (s)		80.3			38.4			8.2			23.1	
Approach LOS		F			D			A			C	

Intersection Summary

HCM Average Control Delay	36.5	HCM Level of Service	D
HCM Volume to Capacity ratio	0.86		
Actuated Cycle Length (s)	100.0	Sum of lost time (s)	15.0
Intersection Capacity Utilization	90.1%	ICU Level of Service	E
Analysis Period (min)	15		

c Critical Lane Group

Movement	EBL	EBT	EBR	WBL	WBT	WBR	NBL	NBT	NBR	SBL	SBT	SBR
Lane Configurations												
Volume (vph)	205	6	403	3	7	3	158	255	6	3	1094	51
Ideal Flow (vphpl)	1900	1900	1900	1900	1900	1900	1900	1900	1900	1900	1900	1900
Total Lost time (s)		5.0	4.0		5.0		4.0	5.0		5.0	5.0	5.0
Lane Util. Factor		1.00	1.00		1.00		1.00	1.00		1.00	1.00	1.00
Frt		1.00	0.85		0.97		1.00	1.00		1.00	1.00	0.85
Flt Protected		0.95	1.00		0.99		0.95	1.00		0.95	1.00	1.00
Satd. Flow (prot)		1777	1583		1790		1770	1856		1770	1863	1583
Flt Permitted		0.72	1.00		0.94		0.07	1.00		0.59	1.00	1.00
Satd. Flow (perm)		1346	1583		1694		122	1856		1091	1863	1583
Peak-hour factor, PHF	0.92	0.92	0.92	0.92	0.92	0.92	0.92	0.92	0.92	0.92	0.92	0.92
Adj. Flow (vph)	223	7	438	3	8	3	172	277	7	3	1189	55
RTOR Reduction (vph)	0	0	48	0	2	0	0	1	0	0	0	12
Lane Group Flow (vph)	0	230	390	0	12	0	172	283	0	3	1189	43
Turn Type	Perm		pm+ov	Perm			pm+pt			Perm		Perm
Protected Phases		4	5		8		5	2			6	
Permitted Phases	4		4	8			2			6		6
Actuated Green, G (s)		17.0	28.4		17.0		72.4	72.4		57.0	57.0	57.0
Effective Green, g (s)		17.0	28.4		17.0		72.4	72.4		57.0	57.0	57.0
Actuated g/C Ratio		0.17	0.29		0.17		0.73	0.73		0.57	0.57	0.57
Clearance Time (s)		5.0	4.0		5.0		4.0	5.0		5.0	5.0	5.0
Vehicle Extension (s)		3.0	3.0		3.0		3.0	3.0		3.0	3.0	3.0
Lane Grp Cap (vph)		230	452		290		278	1352		626	1068	908
v/s Ratio Prot			c0.10				0.07	0.15			c0.64	
v/s Ratio Perm		c0.17	0.15		0.01		0.38			0.00		0.03
v/c Ratio		1.00	0.86		0.04		0.62	0.21		0.00	1.11	0.05
Uniform Delay, d1		41.2	33.7		34.4		27.4	4.3		9.1	21.2	9.3
Progression Factor		1.00	1.00		1.00		1.00	1.00		1.00	1.00	1.00
Incremental Delay, d2		59.3	15.6		0.1		4.1	0.1		0.0	64.1	0.0
Delay (s)		100.5	49.2		34.4		31.5	4.4		9.1	85.3	9.3
Level of Service		F	D		C		C	A		A	F	A
Approach Delay (s)		66.9			34.4			14.6			81.8	
Approach LOS		E			C			B			F	

Intersection Summary

HCM Average Control Delay	64.5	HCM Level of Service	E
HCM Volume to Capacity ratio	1.06		
Actuated Cycle Length (s)	99.4	Sum of lost time (s)	14.0
Intersection Capacity Utilization	97.5%	ICU Level of Service	F
Analysis Period (min)	15		

c Critical Lane Group

Movement	EBL	EBT	EBR	WBL	WBT	WBR	NBL	NBT	NBR	SBL	SBT	SBR
Lane Configurations												
Volume (vph)	112	610	125	140	508	150	113	329	148	386	985	248
Ideal Flow (vphpl)	1900	1900	1900	1900	1900	1900	1900	1900	1900	1900	1900	1900
Total Lost time (s)	5.0	5.0	5.0	5.0	5.0	5.0	4.0	5.0	5.0	4.0	5.0	5.0
Lane Util. Factor	1.00	0.95	1.00	0.91	0.91	1.00	1.00	0.95	1.00	1.00	0.95	1.00
Frt	1.00	1.00	0.85	1.00	1.00	0.85	1.00	1.00	0.85	1.00	1.00	0.85
Flt Protected	0.95	1.00	1.00	0.95	1.00	1.00	0.95	1.00	1.00	0.95	1.00	1.00
Satd. Flow (prot)	1770	3539	1583	1610	3386	1583	1770	3539	1583	1770	3539	1583
Flt Permitted	0.95	1.00	1.00	0.95	1.00	1.00	0.13	1.00	1.00	0.39	1.00	1.00
Satd. Flow (perm)	1770	3539	1583	1610	3386	1583	240	3539	1583	734	3539	1583
Peak-hour factor, PHF	0.92	0.92	0.92	0.92	0.92	0.92	0.92	0.92	0.92	0.92	0.92	0.92
Adj. Flow (vph)	122	663	136	152	552	163	123	358	161	420	1071	270
RTOR Reduction (vph)	0	0	115	0	0	126	0	0	119	0	0	170
Lane Group Flow (vph)	122	663	21	137	567	37	123	358	42	420	1071	100
Turn Type	Split		Perm	Split		Perm	pm+pt		Perm	pm+pt		Perm
Protected Phases	2	2		6	6		3	8		7	4	
Permitted Phases			2			6	8		8	4		4
Actuated Green, G (s)	18.9	18.9	18.9	27.5	27.5	27.5	41.4	31.1	31.1	58.6	44.3	44.3
Effective Green, g (s)	18.9	18.9	18.9	27.5	27.5	27.5	41.4	31.1	31.1	58.6	44.3	44.3
Actuated g/C Ratio	0.16	0.16	0.16	0.23	0.23	0.23	0.34	0.26	0.26	0.49	0.37	0.37
Clearance Time (s)	5.0	5.0	5.0	5.0	5.0	5.0	4.0	5.0	5.0	4.0	5.0	5.0
Vehicle Extension (s)	3.0	3.0	3.0	3.0	3.0	3.0	3.0	3.0	3.0	3.0	3.0	3.0
Lane Grp Cap (vph)	279	557	249	369	776	363	214	917	410	561	1306	584
v/s Ratio Prot	0.07	c0.19		0.09	c0.17		0.05	0.10		c0.15	c0.30	
v/s Ratio Perm			0.01			0.02	0.15		0.03	0.22		0.06
v/c Ratio	0.44	1.19	0.09	0.37	0.73	0.10	0.57	0.39	0.10	0.75	0.82	0.17
Uniform Delay, d1	45.7	50.6	43.2	39.0	42.8	36.5	29.1	36.6	33.8	21.2	34.2	25.5
Progression Factor	1.00	1.00	1.00	1.00	1.00	1.00	1.00	1.00	1.00	0.87	0.93	0.99
Incremental Delay, d2	4.9	102.5	0.7	0.6	3.6	0.1	3.7	1.3	0.5	4.6	3.6	0.1
Delay (s)	50.7	153.1	43.9	39.6	46.4	36.6	32.8	37.9	34.3	23.1	35.4	25.5
Level of Service	D	F	D	D	D	D	C	D	C	C	D	C
Approach Delay (s)		123.4			43.5			36.0			30.9	
Approach LOS		F			D			D			C	

Intersection Summary

HCM Average Control Delay	54.6	HCM Level of Service	D
HCM Volume to Capacity ratio	0.83		
Actuated Cycle Length (s)	120.0	Sum of lost time (s)	14.0
Intersection Capacity Utilization	80.2%	ICU Level of Service	D
Analysis Period (min)	15		

c Critical Lane Group

Movement	EBL	EBT	EBR	WBL	WBT	WBR	NBL	NBT	NBR	SBL	SBT	SBR
Lane Configurations												
Volume (vph)	133	452	103	152	156	42	38	123	106	193	479	158
Ideal Flow (vphpl)	1900	1900	1900	1900	1900	1900	1900	1900	1900	1900	1900	1900
Total Lost time (s)	4.0	5.0		4.0	4.0	4.0	6.0	6.0		4.0	6.0	
Lane Util. Factor	1.00	1.00		1.00	1.00	1.00	1.00	0.95		1.00	0.95	
Frt	1.00	0.97		1.00	1.00	0.85	1.00	0.93		1.00	0.96	
Flt Protected	0.95	1.00		0.95	1.00	1.00	0.95	1.00		0.95	1.00	
Satd. Flow (prot)	1770	1811		1770	1863	1583	1770	3294		1770	3407	
Flt Permitted	0.60	1.00		0.10	1.00	1.00	0.39	1.00		0.53	1.00	
Satd. Flow (perm)	1120	1811		181	1863	1583	723	3294		981	3407	
Peak-hour factor, PHF	0.92	0.92	0.92	0.92	0.92	0.92	0.92	0.92	0.92	0.92	0.92	0.92
Adj. Flow (vph)	145	491	112	165	170	46	41	134	115	210	521	172
RTOR Reduction (vph)	0	7	0	0	0	29	0	81	0	0	25	0
Lane Group Flow (vph)	145	596	0	165	170	17	41	168	0	210	668	0
Turn Type	pm+pt			custom		custom	Perm			pm+pt		
Protected Phases	7	4		3				2		1	6	
Permitted Phases	4			8	8	8	2			6		
Actuated Green, G (s)	53.6	42.8		56.0	44.5	44.5	35.2	35.2		50.7	50.7	
Effective Green, g (s)	53.6	42.8		56.0	44.5	44.5	35.2	35.2		50.7	50.7	
Actuated g/C Ratio	0.45	0.36		0.47	0.37	0.37	0.29	0.29		0.42	0.42	
Clearance Time (s)	4.0	5.0		4.0	4.0	4.0	6.0	6.0		4.0	6.0	
Vehicle Extension (s)	3.0	3.0		3.0	3.0	3.0	3.0	3.0		3.0	3.0	
Lane Grp Cap (vph)	559	646		237	691	587	212	966		490	1439	
v/s Ratio Prot	0.02	c0.33		c0.07				0.05		0.04	c0.20	
v/s Ratio Perm	0.09			0.26	0.09	0.01	0.06			0.14		
v/c Ratio	0.26	0.92		0.70	0.25	0.03	0.19	0.17		0.43	0.46	
Uniform Delay, d1	20.1	37.0		25.1	26.1	24.0	31.8	31.6		22.8	24.9	
Progression Factor	1.00	1.00		1.34	0.91	0.80	1.00	1.00		1.00	1.00	
Incremental Delay, d2	0.2	18.8		8.5	0.2	0.0	2.0	0.4		0.6	1.1	
Delay (s)	20.3	55.8		42.1	24.1	19.1	33.8	32.0		23.4	26.0	
Level of Service	C	E		D	C	B	C	C		C	C	
Approach Delay (s)		48.9			31.3			32.2			25.4	
Approach LOS		D			C			C			C	

Intersection Summary

HCM Average Control Delay	34.8	HCM Level of Service	C
HCM Volume to Capacity ratio	0.68		
Actuated Cycle Length (s)	120.0	Sum of lost time (s)	15.0
Intersection Capacity Utilization	80.1%	ICU Level of Service	D
Analysis Period (min)	15		

c Critical Lane Group

Movement	EBL	EBT	EBR	WBL	WBT	WBR	NBL	NBT	NBR	SBL	SBT	SBR
Lane Configurations												
Volume (vph)	20	0	47	314	1	103	5	162	33	19	747	8
Ideal Flow (vphpl)	1900	1900	1900	1900	1900	1900	1900	1900	1900	1900	1900	1900
Total Lost time (s)		5.0			5.0	5.0		5.0	5.0		5.0	5.0
Lane Util. Factor		1.00			1.00	1.00		1.00	1.00		1.00	1.00
Frt		0.91			1.00	0.85		1.00	0.85		1.00	0.85
Flt Protected		0.99			0.95	1.00		1.00	1.00		1.00	1.00
Satd. Flow (prot)		1662			1774	1583		1860	1583		1860	1583
Flt Permitted		0.60			0.69	1.00		0.98	1.00		0.99	1.00
Satd. Flow (perm)		1012			1284	1583		1831	1583		1846	1583
Peak-hour factor, PHF	0.92	0.92	0.92	0.92	0.92	0.92	0.92	0.92	0.92	0.92	0.92	0.92
Adj. Flow (vph)	22	0	51	341	1	112	5	176	36	21	812	9
RTOR Reduction (vph)	0	40	0	0	0	87	0	0	11	0	0	2
Lane Group Flow (vph)	0	33	0	0	342	25	0	181	25	0	833	7
Turn Type	Perm			Perm		Perm	Perm		Perm	Perm		Perm
Protected Phases		4			8			2			6	
Permitted Phases	4			8		8	2		2	6		6
Actuated Green, G (s)		27.0			27.0	27.0		83.0	83.0		83.0	83.0
Effective Green, g (s)		27.0			27.0	27.0		83.0	83.0		83.0	83.0
Actuated g/C Ratio		0.22			0.22	0.22		0.69	0.69		0.69	0.69
Clearance Time (s)		5.0			5.0	5.0		5.0	5.0		5.0	5.0
Vehicle Extension (s)		3.0			3.0	3.0		3.0	3.0		3.0	3.0
Lane Grp Cap (vph)		228			289	356		1266	1095		1277	1095
v/s Ratio Prot												
v/s Ratio Perm		0.03			c0.27	0.02		0.10	0.02		c0.45	0.00
v/c Ratio		0.15			1.18	0.07		0.14	0.02		0.65	0.01
Uniform Delay, d1		37.3			46.5	36.6		6.3	5.8		10.4	5.7
Progression Factor		1.00			1.00	1.00		1.00	1.00		2.13	1.96
Incremental Delay, d2		0.3			112.1	0.1		0.2	0.0		0.9	0.0
Delay (s)		37.6			158.6	36.7		6.6	5.8		23.0	11.2
Level of Service		D			F	D		A	A		C	B
Approach Delay (s)		37.6			128.5			6.4			22.9	
Approach LOS		D			F			A			C	

Intersection Summary

HCM Average Control Delay	51.6	HCM Level of Service	D
HCM Volume to Capacity ratio	0.78		
Actuated Cycle Length (s)	120.0	Sum of lost time (s)	10.0
Intersection Capacity Utilization	85.8%	ICU Level of Service	E
Analysis Period (min)	15		

c Critical Lane Group

Movement	EBL	EBT	EBR	WBL	WBT	WBR	NBL	NBT	NBR	SBL	SBT	SBR
Lane Configurations												
Volume (veh/h)	10	0	48	4	0	1	7	176	164	19	1085	20
Sign Control		Stop			Stop			Free			Free	
Grade		0%			0%			0%			0%	
Peak Hour Factor	0.92	0.92	0.92	0.92	0.92	0.92	0.92	0.92	0.92	0.92	0.92	0.92
Hourly flow rate (vph)	11	0	52	4	0	1	8	191	178	21	1179	22
Pedestrians								45			9	
Lane Width (ft)								12.0			12.0	
Walking Speed (ft/s)								4.0			4.0	
Percent Blockage								4			1	
Right turn flare (veh)												
Median type								None			None	
Median storage veh)												
Upstream signal (ft)												
pX, platoon unblocked												
vC, conflicting volume	1437	1605	1224	1524	1449	200	1201			370		
vC1, stage 1 conf vol												
vC2, stage 2 conf vol												
vCu, unblocked vol	1437	1605	1224	1524	1449	200	1201			370		
tC, single (s)	7.1	6.5	6.2	7.1	6.5	6.2	4.1			4.1		
tC, 2 stage (s)												
tF (s)	3.5	4.0	3.3	3.5	4.0	3.3	2.2			2.2		
p0 queue free %	90	100	75	94	100	100	99			98		
cM capacity (veh/h)	107	102	210	68	127	834	581			1189		

Direction, Lane #	EB 1	WB 1	NB 1	NB 2	SB 1	SB 2
Volume Total	63	5	199	178	1200	22
Volume Left	11	4	8	0	21	0
Volume Right	52	1	0	178	0	22
cSH	180	84	581	1700	1189	1700
Volume to Capacity	0.35	0.07	0.01	0.10	0.02	0.01
Queue Length 95th (ft)	37	5	1	0	1	0
Control Delay (s)	35.3	51.0	0.6	0.0	0.6	0.0
Lane LOS	E	F	A		A	
Approach Delay (s)	35.3	51.0	0.3		0.6	
Approach LOS	E	F				

Intersection Summary			
Average Delay	2.0		
Intersection Capacity Utilization	90.1%	ICU Level of Service	E
Analysis Period (min)	15		

Movement	EBL	EBT	EBR	WBL	WBT	WBR	NBL	NBT	NBR	SBL	SBT	SBR
Lane Configurations												
Volume (vph)	5	4	35	70	2	7	6	446	110	35	1569	10
Ideal Flow (vphpl)	1900	1900	1900	1900	1900	1900	1900	1900	1900	1900	1900	1900
Total Lost time (s)		5.0		5.0	5.0		5.0	5.0		5.0	5.0	
Lane Util. Factor		1.00		1.00	1.00		1.00	0.95		1.00	0.95	
Frt		0.89		1.00	0.88		1.00	0.97		1.00	1.00	
Flt Protected		0.99		0.95	1.00		0.95	1.00		0.95	1.00	
Satd. Flow (prot)		1651		1770	1639		1770	3434		1770	3536	
Flt Permitted		0.97		0.82	1.00		0.13	1.00		0.40	1.00	
Satd. Flow (perm)		1611		1535	1639		240	3434		737	3536	
Peak-hour factor, PHF	0.92	0.92	0.92	0.92	0.92	0.92	0.92	0.92	0.92	0.92	0.92	0.92
Adj. Flow (vph)	5	4	38	76	2	8	7	485	120	38	1705	11
RTOR Reduction (vph)	0	33	0	0	7	0	0	10	0	0	0	0
Lane Group Flow (vph)	0	14	0	76	3	0	7	595	0	38	1716	0
Turn Type	Perm			Perm			Perm			pm+pt		
Protected Phases		4			8			2		1	6	
Permitted Phases	4			8			2			6		
Actuated Green, G (s)		10.2		10.2	10.2		91.0	91.0		99.8	99.8	
Effective Green, g (s)		10.2		10.2	10.2		91.0	91.0		99.8	99.8	
Actuated g/C Ratio		0.08		0.08	0.08		0.76	0.76		0.83	0.83	
Clearance Time (s)		5.0		5.0	5.0		5.0	5.0		5.0	5.0	
Vehicle Extension (s)		3.0		3.0	3.0		3.0	3.0		3.0	3.0	
Lane Grp Cap (vph)		137		130	139		182	2604		646	2941	
v/s Ratio Prot					0.00			0.17		0.00	c0.49	
v/s Ratio Perm		0.01		c0.05			0.03			0.05		
v/c Ratio		0.10		0.58	0.02		0.04	0.23		0.06	0.58	
Uniform Delay, d1		50.7		52.9	50.3		3.6	4.2		1.9	3.3	
Progression Factor		1.00		1.00	1.00		2.40	2.89		1.00	1.00	
Incremental Delay, d2		0.3		6.6	0.1		0.4	0.2		0.0	0.9	
Delay (s)		51.0		59.4	50.4		9.0	12.5		1.9	4.2	
Level of Service		D		E	D		A	B		A	A	
Approach Delay (s)		51.0			58.4			12.4			4.1	
Approach LOS		D			E			B			A	

Intersection Summary

HCM Average Control Delay	8.9	HCM Level of Service	A
HCM Volume to Capacity ratio	0.58		
Actuated Cycle Length (s)	120.0	Sum of lost time (s)	10.0
Intersection Capacity Utilization	62.6%	ICU Level of Service	B
Analysis Period (min)	15		

c Critical Lane Group

Movement	WBL	WBR	NBT	NBR	SBL	SBT
Lane Configurations						
Volume (veh/h)	92	0	380	85	10	1127
Sign Control	Stop		Free			Free
Grade	0%		0%			0%
Peak Hour Factor	0.92	0.92	0.92	0.92	0.92	0.92
Hourly flow rate (vph)	100	0	413	92	11	1225
Pedestrians						
Lane Width (ft)						
Walking Speed (ft/s)						
Percent Blockage						
Right turn flare (veh)						
Median type			None			None
Median storage veh)						
Upstream signal (ft)			861			
pX, platoon unblocked						
vC, conflicting volume	1660	413			505	
vC1, stage 1 conf vol						
vC2, stage 2 conf vol						
vCu, unblocked vol	1660	413			505	
tC, single (s)	6.4	6.2			4.1	
tC, 2 stage (s)						
tF (s)	3.5	3.3			2.2	
p0 queue free %	6	100			99	
cM capacity (veh/h)	106	639			1059	

Direction, Lane #	WB 1	NB 1	NB 2	SB 1
Volume Total	100	413	92	1236
Volume Left	100	0	0	11
Volume Right	0	0	92	0
cSH	106	1700	1700	1059
Volume to Capacity	0.94	0.24	0.05	0.01
Queue Length 95th (ft)	144	0	0	1
Control Delay (s)	146.7	0.0	0.0	0.4
Lane LOS	F			A
Approach Delay (s)	146.7	0.0		0.4
Approach LOS	F			

Intersection Summary			
Average Delay	8.2		
Intersection Capacity Utilization	79.0%	ICU Level of Service	D
Analysis Period (min)	15		

Movement	EBL	EBT	EBR	WBL	WBT	WBR	NBL	NBT	NBR	SBL	SBT	SBR
Lane Configurations												
Volume (vph)	31	98	55	276	124	81	76	949	235	70	426	23
Ideal Flow (vphpl)	1900	1900	1900	1900	1900	1900	1900	1900	1900	1900	1900	1900
Total Lost time (s)		7.0		7.0	7.0		7.0	7.0		7.0	7.0	7.0
Lane Util. Factor		0.95		0.91	0.91		1.00	0.95		1.00	0.91	0.91
Frt		0.96		1.00	0.96		1.00	0.97		1.00	1.00	0.85
Flt Protected		0.99		0.95	0.98		0.95	1.00		0.95	1.00	1.00
Satd. Flow (prot)		3352		1610	3204		1770	3434		1770	3387	1441
Flt Permitted		0.99		0.95	0.98		0.46	1.00		0.13	1.00	1.00
Satd. Flow (perm)		3352		1610	3204		859	3434		248	3387	1441
Peak-hour factor, PHF	0.92	0.92	0.92	0.92	0.92	0.92	0.92	0.92	0.92	0.92	0.92	0.92
Adj. Flow (vph)	34	107	60	300	135	88	83	1032	255	76	463	25
RTOR Reduction (vph)	0	46	0	0	24	0	0	15	0	0	0	10
Lane Group Flow (vph)	0	155	0	177	322	0	83	1272	0	76	466	12
Turn Type	Split			Split			Perm			Perm		Perm
Protected Phases	4	4		8	8			2			6	
Permitted Phases							2			6		6
Actuated Green, G (s)		13.9		18.7	18.7		66.4	66.4		66.4	66.4	66.4
Effective Green, g (s)		13.9		18.7	18.7		66.4	66.4		66.4	66.4	66.4
Actuated g/C Ratio		0.12		0.16	0.16		0.55	0.55		0.55	0.55	0.55
Clearance Time (s)		7.0		7.0	7.0		7.0	7.0		7.0	7.0	7.0
Vehicle Extension (s)		3.0		3.0	3.0		3.0	3.0		3.0	3.0	3.0
Lane Grp Cap (vph)		388		251	499		475	1900		137	1874	797
v/s Ratio Prot		c0.05		c0.11	0.10			c0.37			0.14	
v/s Ratio Perm							0.10			0.31		0.01
v/c Ratio		0.40		0.71	0.64		0.17	0.67		0.55	0.25	0.02
Uniform Delay, d1		49.2		48.0	47.5		13.3	19.0		17.3	13.9	12.1
Progression Factor		1.00		1.00	1.00		1.00	1.00		1.00	1.00	1.00
Incremental Delay, d2		0.7		8.7	2.9		0.8	1.9		15.2	0.3	0.0
Delay (s)		49.9		56.7	50.4		14.1	20.9		32.5	14.2	12.1
Level of Service		D		E	D		B	C		C	B	B
Approach Delay (s)		49.9			52.5			20.5			16.6	
Approach LOS		D			D			C			B	

Intersection Summary

HCM Average Control Delay	28.2	HCM Level of Service	C
HCM Volume to Capacity ratio	0.64		
Actuated Cycle Length (s)	120.0	Sum of lost time (s)	21.0
Intersection Capacity Utilization	80.1%	ICU Level of Service	D
Analysis Period (min)	15		

c Critical Lane Group

Movement	EBL	EBT	EBR	WBL	WBT	WBR	NBL	NBT	NBR	SBL	SBT	SBR
Lane Configurations												
Volume (vph)	87	275	120	113	388	62	184	670	107	38	344	88
Ideal Flow (vphpl)	1900	1900	1900	1900	1900	1900	1900	1900	1900	1900	1900	1900
Total Lost time (s)	5.0	5.0	5.0	5.0	5.0		5.0	5.0		5.0	5.0	
Lane Util. Factor	1.00	1.00	1.00	1.00	0.95		1.00	1.00		1.00	1.00	
Frt	1.00	1.00	0.85	1.00	0.98		1.00	0.98		1.00	0.97	
Flt Protected	0.95	1.00	1.00	0.95	1.00		0.95	1.00		0.95	1.00	
Satd. Flow (prot)	1770	1863	1583	1770	3466		1770	1824		1770	1806	
Flt Permitted	0.31	1.00	1.00	0.31	1.00		0.35	1.00		0.29	1.00	
Satd. Flow (perm)	571	1863	1583	577	3466		651	1824		542	1806	
Peak-hour factor, PHF	0.92	0.92	0.92	0.92	0.92	0.92	0.92	0.92	0.92	0.92	0.92	0.92
Adj. Flow (vph)	95	299	130	123	422	67	200	728	116	41	374	96
RTOR Reduction (vph)	0	0	101	0	14	0	0	5	0	0	7	0
Lane Group Flow (vph)	95	299	29	123	475	0	200	839	0	41	463	0
Turn Type	Perm		Perm	Perm			pm+pt			Perm		
Protected Phases		4			8		5	2			6	
Permitted Phases	4		4	8			2			6		
Actuated Green, G (s)	22.5	22.5	22.5	22.5	22.5		67.5	67.5		52.5	52.5	
Effective Green, g (s)	22.5	22.5	22.5	22.5	22.5		67.5	67.5		52.5	52.5	
Actuated g/C Ratio	0.22	0.22	0.22	0.22	0.22		0.68	0.68		0.52	0.52	
Clearance Time (s)	5.0	5.0	5.0	5.0	5.0		5.0	5.0		5.0	5.0	
Vehicle Extension (s)	3.0	3.0	3.0	3.0	3.0		3.0	3.0		3.0	3.0	
Lane Grp Cap (vph)	128	419	356	130	780		551	1231		285	948	
v/s Ratio Prot		0.16			0.14		0.04	c0.46			0.26	
v/s Ratio Perm	0.17		0.02	c0.21			0.21			0.08		
v/c Ratio	0.74	0.71	0.08	0.95	0.61		0.36	0.68		0.14	0.49	
Uniform Delay, d1	36.1	35.8	30.6	38.2	34.8		7.8	9.8		12.2	15.2	
Progression Factor	1.00	1.00	1.00	1.00	1.00		1.00	1.00		1.00	1.00	
Incremental Delay, d2	20.5	5.7	0.1	61.9	1.4		0.4	3.1		1.1	1.8	
Delay (s)	56.6	41.5	30.7	100.0	36.2		8.2	12.9		13.3	17.0	
Level of Service	E	D	C	F	D		A	B		B	B	
Approach Delay (s)		41.5			49.0			12.0			16.7	
Approach LOS		D			D			B			B	

Intersection Summary

HCM Average Control Delay	27.0	HCM Level of Service	C
HCM Volume to Capacity ratio	0.75		
Actuated Cycle Length (s)	100.0	Sum of lost time (s)	10.0
Intersection Capacity Utilization	87.5%	ICU Level of Service	E
Analysis Period (min)	15		

c Critical Lane Group

Movement	EBL	EBT	EBR	WBL	WBT	WBR	NBL	NBT	NBR	SBL	SBT	SBR
Lane Configurations												
Volume (vph)	87	6	334	6	7	4	464	813	7	4	415	146
Ideal Flow (vphpl)	1900	1900	1900	1900	1900	1900	1900	1900	1900	1900	1900	1900
Total Lost time (s)		5.0	4.0		4.0		4.0	5.0		5.0	5.0	5.0
Lane Util. Factor		1.00	1.00		1.00		1.00	1.00		1.00	1.00	1.00
Frt		1.00	0.85		0.97		1.00	1.00		1.00	1.00	0.85
Flt Protected		0.96	1.00		0.98		0.95	1.00		0.95	1.00	1.00
Satd. Flow (prot)		1780	1583		1777		1770	1860		1770	1863	1583
Flt Permitted		0.73	1.00		0.90		0.28	1.00		0.33	1.00	1.00
Satd. Flow (perm)		1354	1583		1629		526	1860		621	1863	1583
Peak-hour factor, PHF	0.92	0.92	0.92	0.92	0.92	0.92	0.92	0.92	0.92	0.92	0.92	0.92
Adj. Flow (vph)	95	7	363	7	8	4	504	884	8	4	451	159
RTOR Reduction (vph)	0	0	224	0	3	0	0	0	0	0	0	100
Lane Group Flow (vph)	0	102	139	0	16	0	504	892	0	4	451	59
Turn Type	Perm		pm+ov	Perm			pm+pt			Perm		Perm
Protected Phases		4	5		8		5	2			6	
Permitted Phases	4		4	8			2			6		6
Actuated Green, G (s)		8.6	21.7		9.6		38.1	38.1		21.0	21.0	21.0
Effective Green, g (s)		8.6	21.7		9.6		38.1	38.1		21.0	21.0	21.0
Actuated g/C Ratio		0.15	0.38		0.17		0.67	0.67		0.37	0.37	0.37
Clearance Time (s)		5.0	4.0		4.0		4.0	5.0		5.0	5.0	5.0
Vehicle Extension (s)		3.0	3.0		3.0		3.0	3.0		3.0	3.0	3.0
Lane Grp Cap (vph)		205	606		276		641	1250		230	690	586
v/s Ratio Prot			0.05				c0.18	0.48			0.24	
v/s Ratio Perm		c0.08	0.03		0.01		c0.35			0.01		0.04
v/c Ratio		0.50	0.23		0.06		0.79	0.71		0.02	0.65	0.10
Uniform Delay, d1		22.1	11.8		19.8		6.6	5.9		11.3	14.8	11.7
Progression Factor		1.00	1.00		1.00		1.00	1.00		1.00	1.00	1.00
Incremental Delay, d2		1.9	0.2		0.1		6.3	2.0		0.0	2.2	0.1
Delay (s)		24.0	12.0		19.8		12.9	7.8		11.3	17.1	11.7
Level of Service		C	B		B		B	A		B	B	B
Approach Delay (s)		14.7			19.8			9.6			15.6	
Approach LOS		B			B			A			B	

Intersection Summary

HCM Average Control Delay	12.1	HCM Level of Service	B
HCM Volume to Capacity ratio	0.70		
Actuated Cycle Length (s)	56.7	Sum of lost time (s)	9.0
Intersection Capacity Utilization	73.2%	ICU Level of Service	D
Analysis Period (min)	15		

c Critical Lane Group

Movement	EBL	EBT	EBR	WBL	WBT	WBR	NBL	NBT	NBR	SBL	SBT	SBR
Lane Configurations												
Volume (vph)	218	663	165	171	722	416	194	779	143	200	373	195
Ideal Flow (vphpl)	1900	1900	1900	1900	1900	1900	1900	1900	1900	1900	1900	1900
Total Lost time (s)	5.0	5.0	5.0	5.0	5.0	5.0	4.0	5.0	5.0	4.0	5.0	5.0
Lane Util. Factor	1.00	0.95	1.00	0.91	0.91	1.00	1.00	0.95	1.00	1.00	0.95	1.00
Frt	1.00	1.00	0.85	1.00	1.00	0.85	1.00	1.00	0.85	1.00	1.00	0.85
Flt Protected	0.95	1.00	1.00	0.95	1.00	1.00	0.95	1.00	1.00	0.95	1.00	1.00
Satd. Flow (prot)	1770	3539	1583	1610	3386	1583	1770	3539	1583	1770	3539	1583
Flt Permitted	0.95	1.00	1.00	0.95	1.00	1.00	0.44	1.00	1.00	0.15	1.00	1.00
Satd. Flow (perm)	1770	3539	1583	1610	3386	1583	828	3539	1583	288	3539	1583
Peak-hour factor, PHF	0.92	0.92	0.92	0.92	0.92	0.92	0.92	0.92	0.92	0.92	0.92	0.92
Adj. Flow (vph)	237	721	179	186	785	452	211	847	155	217	405	212
RTOR Reduction (vph)	0	0	142	0	0	204	0	0	103	0	0	141
Lane Group Flow (vph)	237	721	37	167	804	248	211	847	52	217	405	71
Turn Type	Split		Perm	Split		Perm	pm+pt		Perm	pm+pt		Perm
Protected Phases	2	2		6	6		3	8		7	4	
Permitted Phases			2			6	8		8	4		4
Actuated Green, G (s)	25.0	25.0	25.0	25.0	25.0	25.0	50.7	40.0	40.0	51.3	40.3	40.3
Effective Green, g (s)	25.0	25.0	25.0	25.0	25.0	25.0	50.7	40.0	40.0	51.3	40.3	40.3
Actuated g/C Ratio	0.21	0.21	0.21	0.21	0.21	0.21	0.42	0.33	0.33	0.43	0.34	0.34
Clearance Time (s)	5.0	5.0	5.0	5.0	5.0	5.0	4.0	5.0	5.0	4.0	5.0	5.0
Vehicle Extension (s)	3.0	3.0	3.0	3.0	3.0	3.0	3.0	3.0	3.0	3.0	3.0	3.0
Lane Grp Cap (vph)	369	737	330	335	705	330	434	1180	528	259	1189	532
v/s Ratio Prot	0.13	c0.20		0.10	c0.24		0.04	0.24		c0.08	0.11	
v/s Ratio Perm			0.02			0.16	0.16		0.03	c0.28		0.04
v/c Ratio	0.64	0.98	0.11	0.50	1.14	0.75	0.49	0.72	0.10	0.84	0.34	0.13
Uniform Delay, d1	43.4	47.2	38.5	42.0	47.5	44.6	22.9	35.1	27.6	25.4	29.9	27.7
Progression Factor	1.00	1.00	1.00	1.00	1.00	1.00	1.00	1.00	1.00	1.00	1.00	1.00
Incremental Delay, d2	8.3	28.3	0.7	1.2	79.6	9.3	0.9	3.8	0.4	20.4	0.2	0.1
Delay (s)	51.7	75.5	39.2	43.1	127.1	53.8	23.7	38.8	27.9	45.8	30.1	27.8
Level of Service	D	E	D	D	F	D	C	D	C	D	C	C
Approach Delay (s)		64.8			94.0			34.8			33.6	
Approach LOS		E			F			C			C	

Intersection Summary

HCM Average Control Delay	60.3	HCM Level of Service	E
HCM Volume to Capacity ratio	0.90		
Actuated Cycle Length (s)	120.0	Sum of lost time (s)	14.0
Intersection Capacity Utilization	86.7%	ICU Level of Service	E
Analysis Period (min)	15		

c Critical Lane Group

Movement	EBL	EBT	EBR	WBL	WBT	WBR	NBL	NBT	NBR	SBL	SBT	SBR
Lane Configurations												
Volume (vph)	264	273	85	268	466	81	106	388	161	57	226	141
Ideal Flow (vphpl)	1900	1900	1900	1900	1900	1900	1900	1900	1900	1900	1900	1900
Total Lost time (s)	4.0	5.0		4.0	4.0	4.0	6.0	6.0		4.0	6.0	
Lane Util. Factor	1.00	1.00		1.00	1.00	1.00	1.00	0.95		1.00	0.95	
Frt	1.00	0.96		1.00	1.00	0.85	1.00	0.96		1.00	0.94	
Flt Protected	0.95	1.00		0.95	1.00	1.00	0.95	1.00		0.95	1.00	
Satd. Flow (prot)	1770	1797		1770	1863	1583	1770	3384		1770	3336	
Flt Permitted	0.11	1.00		0.30	1.00	1.00	0.52	1.00		0.29	1.00	
Satd. Flow (perm)	198	1797		550	1863	1583	963	3384		549	3336	
Peak-hour factor, PHF	0.92	0.92	0.92	0.92	0.92	0.92	0.92	0.92	0.92	0.92	0.92	0.92
Adj. Flow (vph)	287	297	92	291	507	88	115	422	175	62	246	153
RTOR Reduction (vph)	0	10	0	0	0	60	0	33	0	0	73	0
Lane Group Flow (vph)	287	379	0	291	507	28	115	564	0	62	326	0
Turn Type	pm+pt			custom		custom	Perm			pm+pt		
Protected Phases	7	4		3				2		1	6	
Permitted Phases	4			8	8	8	2			6		
Actuated Green, G (s)	52.6	37.6		51.6	37.6	37.6	42.6	42.6		53.4	53.4	
Effective Green, g (s)	52.6	37.6		51.6	37.6	37.6	42.6	42.6		53.4	53.4	
Actuated g/C Ratio	0.44	0.31		0.43	0.31	0.31	0.36	0.36		0.44	0.44	
Clearance Time (s)	4.0	5.0		4.0	4.0	4.0	6.0	6.0		4.0	6.0	
Vehicle Extension (s)	3.0	3.0		3.0	3.0	3.0	3.0	3.0		3.0	3.0	
Lane Grp Cap (vph)	283	563		379	584	496	342	1201		313	1485	
v/s Ratio Prot	c0.13	0.21		0.09				c0.17		0.01	c0.10	
v/s Ratio Perm	c0.32			0.24	0.27	0.02	0.12			0.08		
v/c Ratio	1.01	0.67		0.77	0.87	0.06	0.34	0.47		0.20	0.22	
Uniform Delay, d1	35.1	35.8		25.0	38.9	28.8	28.3	30.0		20.1	20.5	
Progression Factor	1.00	1.00		0.99	0.94	0.71	1.00	1.00		1.00	1.00	
Incremental Delay, d2	57.2	3.2		8.7	12.5	0.0	2.6	1.3		0.3	0.3	
Delay (s)	92.3	39.0		33.4	49.0	20.4	31.0	31.3		20.4	20.8	
Level of Service	F	D		C	D	C	C	C		C	C	
Approach Delay (s)		61.6			41.1			31.2			20.8	
Approach LOS		E			D			C			C	

Intersection Summary

HCM Average Control Delay	40.2	HCM Level of Service	D
HCM Volume to Capacity ratio	0.72		
Actuated Cycle Length (s)	120.0	Sum of lost time (s)	16.0
Intersection Capacity Utilization	73.4%	ICU Level of Service	D
Analysis Period (min)	15		

c Critical Lane Group

Movement	EBL	EBT	EBR	WBL	WBT	WBR	NBL	NBT	NBR	SBL	SBT	SBR
Lane Configurations												
Volume (vph)	19	0	19	88	1	111	34	527	184	79	256	33
Ideal Flow (vphpl)	1900	1900	1900	1900	1900	1900	1900	1900	1900	1900	1900	1900
Total Lost time (s)		5.0			5.0	5.0		5.0	5.0		5.0	5.0
Lane Util. Factor		1.00			1.00	1.00		1.00	1.00		1.00	1.00
Frt		0.93			1.00	0.85		1.00	0.85		1.00	0.85
Flt Protected		0.98			0.95	1.00		1.00	1.00		0.99	1.00
Satd. Flow (prot)		1695			1775	1583		1857	1583		1841	1583
Flt Permitted		0.82			0.78	1.00		0.96	1.00		0.77	1.00
Satd. Flow (perm)		1421			1459	1583		1790	1583		1429	1583
Peak-hour factor, PHF	0.92	0.92	0.92	0.92	0.92	0.92	0.92	0.92	0.92	0.92	0.92	0.92
Adj. Flow (vph)	21	0	21	96	1	121	37	573	200	86	278	36
RTOR Reduction (vph)	0	19	0	0	0	108	0	0	39	0	0	7
Lane Group Flow (vph)	0	23	0	0	97	13	0	610	161	0	364	29
Turn Type	Perm			Perm		Perm	Perm		Perm	Perm		Perm
Protected Phases		4			8			2			6	
Permitted Phases	4			8		8	2		2	6		6
Actuated Green, G (s)		13.2			13.2	13.2		96.8	96.8		96.8	96.8
Effective Green, g (s)		13.2			13.2	13.2		96.8	96.8		96.8	96.8
Actuated g/C Ratio		0.11			0.11	0.11		0.81	0.81		0.81	0.81
Clearance Time (s)		5.0			5.0	5.0		5.0	5.0		5.0	5.0
Vehicle Extension (s)		3.0			3.0	3.0		3.0	3.0		3.0	3.0
Lane Grp Cap (vph)		156			160	174		1444	1277		1153	1277
v/s Ratio Prot												
v/s Ratio Perm		0.02			c0.07	0.01		c0.34	0.10		0.25	0.02
v/c Ratio		0.15			0.61	0.08		0.42	0.13		0.32	0.02
Uniform Delay, d1		48.3			50.9	47.9		3.4	2.5		3.0	2.3
Progression Factor		1.00			1.00	1.00		1.00	1.00		1.44	2.63
Incremental Delay, d2		0.4			6.4	0.2		0.9	0.2		0.1	0.0
Delay (s)		48.8			57.3	48.1		4.3	2.7		4.5	6.0
Level of Service		D			E	D		A	A		A	A
Approach Delay (s)		48.8			52.2			3.9			4.6	
Approach LOS		D			D			A			A	

Intersection Summary

HCM Average Control Delay	12.5	HCM Level of Service	B
HCM Volume to Capacity ratio	0.44		
Actuated Cycle Length (s)	120.0	Sum of lost time (s)	10.0
Intersection Capacity Utilization	68.8%	ICU Level of Service	C
Analysis Period (min)	15		

c Critical Lane Group

Movement	EBL	EBT	EBR	WBL	WBT	WBR	NBL	NBT	NBR	SBL	SBT	SBR
Lane Configurations												
Volume (veh/h)	13	0	36	101	0	12	38	814	4	79	374	11
Sign Control		Stop			Stop			Free			Free	
Grade		0%			0%			0%			0%	
Peak Hour Factor	0.92	0.92	0.92	0.92	0.92	0.92	0.92	0.92	0.92	0.92	0.92	0.92
Hourly flow rate (vph)	14	0	39	110	0	13	41	885	4	86	407	12
Pedestrians								45			9	
Lane Width (ft)								12.0			12.0	
Walking Speed (ft/s)								4.0			4.0	
Percent Blockage								4			1	
Right turn flare (veh)												
Median type								None			None	
Median storage veh)												
Upstream signal (ft)												
pX, platoon unblocked												
vC, conflicting volume	1568	1550	452	1630	1558	894	418			889		
vC1, stage 1 conf vol												
vC2, stage 2 conf vol												
vCu, unblocked vol	1568	1550	452	1630	1558	894	418			889		
tC, single (s)	7.1	6.5	6.2	7.1	6.5	6.2	4.1			4.1		
tC, 2 stage (s)												
tF (s)	3.5	4.0	3.3	3.5	4.0	3.3	2.2			2.2		
p0 queue free %	81	100	93	0	100	96	96			89		
cM capacity (veh/h)	76	97	585	65	96	337	1141			762		

Direction, Lane #	EB 1	WB 1	NB 1	NB 2	SB 1	SB 2
Volume Total	53	123	926	4	492	12
Volume Left	14	110	41	0	86	0
Volume Right	39	13	0	4	0	12
cSH	211	71	1141	1700	762	1700
Volume to Capacity	0.25	1.73	0.04	0.00	0.11	0.01
Queue Length 95th (ft)	24	269	3	0	9	0
Control Delay (s)	27.7	476.1	1.0	0.0	3.1	0.0
Lane LOS	D	F	A		A	
Approach Delay (s)	27.7	476.1	1.0		3.0	
Approach LOS	D	F				

Intersection Summary				
Average Delay		38.7		
Intersection Capacity Utilization		92.0%	ICU Level of Service	F
Analysis Period (min)		15		

Movement	EBL	EBT	EBR	WBL	WBT	WBR	NBL	NBT	NBR	SBL	SBT	SBR
Lane Configurations												
Volume (vph)	10	0	22	117	5	51	34	1255	57	15	673	13
Ideal Flow (vphpl)	1900	1900	1900	1900	1900	1900	1900	1900	1900	1900	1900	1900
Total Lost time (s)		5.0		5.0	5.0		5.0	5.0		5.0	5.0	
Lane Util. Factor		1.00		1.00	1.00		1.00	0.95		1.00	0.95	
Frt		0.91		1.00	0.86		1.00	0.99		1.00	1.00	
Flt Protected		0.98		0.95	1.00		0.95	1.00		0.95	1.00	
Satd. Flow (prot)		1664		1770	1607		1770	3516		1770	3529	
Flt Permitted		0.91		0.73	1.00		0.37	1.00		0.14	1.00	
Satd. Flow (perm)		1540		1368	1607		686	3516		261	3529	
Peak-hour factor, PHF	0.92	0.92	0.92	0.92	0.92	0.92	0.92	0.92	0.92	0.92	0.92	0.92
Adj. Flow (vph)	11	0	24	127	5	55	37	1364	62	16	732	14
RTOR Reduction (vph)	0	21	0	0	48	0	0	2	0	0	1	0
Lane Group Flow (vph)	0	14	0	127	12	0	37	1424	0	16	745	0
Turn Type	Perm			Perm			Perm			pm+pt		
Protected Phases		4			8			2		1	6	
Permitted Phases	4			8			2			6		
Actuated Green, G (s)		15.2		15.2	15.2		88.4	88.4		95.8	95.8	
Effective Green, g (s)		15.2		15.2	15.2		88.4	88.4		95.8	95.8	
Actuated g/C Ratio		0.13		0.13	0.13		0.73	0.73		0.79	0.79	
Clearance Time (s)		5.0		5.0	5.0		5.0	5.0		5.0	5.0	
Vehicle Extension (s)		3.0		3.0	3.0		3.0	3.0		3.0	3.0	
Lane Grp Cap (vph)		193		172	202		501	2569		237	2794	
v/s Ratio Prot					0.01			c0.40		0.00	c0.21	
v/s Ratio Perm		0.01		c0.09			0.05			0.05		
v/c Ratio		0.07		0.74	0.06		0.07	0.55		0.07	0.27	
Uniform Delay, d1		46.7		51.0	46.6		4.6	7.4		5.0	3.3	
Progression Factor		1.00		1.00	1.00		1.00	1.00		1.00	1.00	
Incremental Delay, d2		0.2		15.2	0.1		0.3	0.9		0.1	0.2	
Delay (s)		46.8		66.2	46.7		4.9	8.2		5.1	3.6	
Level of Service		D		E	D		A	A		A	A	
Approach Delay (s)		46.8			60.0			8.2			3.6	
Approach LOS		D			E			A			A	

Intersection Summary

HCM Average Control Delay	11.3	HCM Level of Service	B
HCM Volume to Capacity ratio	0.58		
Actuated Cycle Length (s)	121.0	Sum of lost time (s)	15.0
Intersection Capacity Utilization	58.0%	ICU Level of Service	B
Analysis Period (min)	15		

c Critical Lane Group

Movement	WBL	WBR	NBT	NBR	SBL	SBT
Lane Configurations						
Volume (veh/h)	4	1	905	4	1	510
Sign Control	Stop		Free			Free
Grade	0%		0%			0%
Peak Hour Factor	0.92	0.92	0.92	0.92	0.92	0.92
Hourly flow rate (vph)	4	1	984	4	1	554
Pedestrians						
Lane Width (ft)						
Walking Speed (ft/s)						
Percent Blockage						
Right turn flare (veh)						
Median type			None			None
Median storage veh)						
Upstream signal (ft)			925			
pX, platoon unblocked	0.57	0.57			0.57	
vC, conflicting volume	1542	986			988	
vC1, stage 1 conf vol						
vC2, stage 2 conf vol						
vCu, unblocked vol	1575	595			599	
tC, single (s)	6.4	6.2			4.1	
tC, 2 stage (s)						
tF (s)	3.5	3.3			2.2	
p0 queue free %	94	100			100	
cM capacity (veh/h)	69	286			556	

Direction, Lane #	WB 1	NB 1	SB 1
Volume Total	5	988	555
Volume Left	4	0	1
Volume Right	1	4	0
cSH	81	1700	556
Volume to Capacity	0.07	0.58	0.00
Queue Length 95th (ft)	5	0	0
Control Delay (s)	52.7	0.0	0.1
Lane LOS	F		A
Approach Delay (s)	52.7	0.0	0.1
Approach LOS	F		

Intersection Summary			
Average Delay		0.2	
Intersection Capacity Utilization		57.9%	ICU Level of Service B
Analysis Period (min)		15	

APPENDIX

I

Traffic Signal Warrant Analysis

Traffic Signal Warrant Analysis

A traffic signal warrant analysis was performed based on standards provided in the 2006 ***Md-MUTCD***. Per the methodology, the warrant analysis is based on the combined volume of both approaches of the mainline and the highest approach of either side street. The 85th Percentile speed limit along Snouffer School Road is expected to exceed 40 mph; therefore the 70 percent reduction applies for this location.

A summary of the traffic volumes used for the signal warrant analysis is presented below in Table D-1. Findings of the other warrants are discussed below.

Table D-1: Traffic Signal Warrant Analysis Volumes

Time Period	From East North Driveway	From West Alliston Hollow Way	Maximum of Both Approaches	From North Snouffers School Road	From South Snouffers School Road	Total of Both Approaches
6:00 - 7:00	0	48	48	870	265	1,135
7:00 - 8:00	0	48	48	1032	1197	2,229
8:00 - 9:00	0	49	49	768	812	1,580
9:00 - 10:00	2	27	27	704	761	1,465
10:00 - 11:00	3	13	13	470	507	977
11:00 - 12:00	31	22	31	369	387	756
12:00 - 1:00	87	10	87	398	509	906
1:00 - 2:00	14	8	14	390	539	930
2:00 - 3:00	35	22	35	375	394	769
3:00 - 4:00	72	19	72	409	429	838
4:00 - 5:00	140	38	140	292	304	596
5:00 - 6:00	113	34	113	307	318	625
6:00 - 7:00	0	22	22	270	330	600

Warrant 1 – Eight-Hour Vehicular Volume

Two conditions are provided as part of this warrant: Condition A and B. Condition A applies when the volume of intersecting traffic is the principal reason for consideration of a traffic signal. Condition B applies to operating conditions where the traffic volume on the major street is so heavy that traffic on the minor street suffers excessive delays and/or hazards in entering the major street. There are two standards that are considered to justify a traffic signal under this warrant. The two standards are described below:

Standard 1:

The need for a traffic control signal shall be considered if an engineering study finds that one of the following conditions for each of any eight (8) hours of an average day:

A. The vehicles per hour given in both of the 100 percent columns of Condition A in Table 4C-1 (See Attached Analysis) exist on the major street and on the higher volume minor-street approaches, respectively, to the intersection; ***OR***

B. The vehicles per hour given in both of the 100 percent columns of Condition B in Table 4C-1 (See Attached Analysis) exist on the major street and on the higher volume minor-street approaches, respectively, to the intersection.

These major street and minor street volumes shall be the same eight (8) hours for each condition; however, the eight (8) hours satisfied in Condition A shall not be required to be the same hours satisfied in Condition B. On the minor street, the higher volume shall not be required to be on the same approach during each of these eight (8) hours.

If the posted or statutory speed limit or the 85th-percentile speed on the major street exceeds 70 km/h or exceeds 40 mph, or if the intersection lies within the built-up area of an isolated community having a population of less than 10,000, the traffic volumes in the 70 percent columns in Table 4C-1 may be used in place of the 100 percent columns.

It can be seen from the Traffic Signal Warrant Analysis Summary that **two (2) hours of Condition A and four (4) hours of Condition B** are met. This standard is not met.

Standard 2:

The need for a traffic control *signal shall be considered if an engineering study finds that both of the following conditions for each of any eight (8) hours of an average day:*

A. The vehicles per hour given in both of the 80 percent columns of Condition A in Table 4C-1 (See Attached Analysis) exist on the major street and on the higher volume minor-street approaches, respectively, to the intersection; ***AND***

B. The vehicles per hour given in both of the 80 percent columns of Condition B in Table 4C-1 (See Attached Analysis) exist on the major street and on the higher volume minor-street approaches, respectively, to the intersection.

These major street and minor street volumes shall be the same eight (8) hours for each condition; however, the eight (8) hours satisfied in Condition A shall not be required to be the same hours satisfied in Condition B. On the minor street, the higher volume shall not be required to be on the same approach during each of these eight (8) hours.

If the posted or statutory speed limit or the 85th-percentile speed on the major street exceeds 70 km/h or exceeds 40 mph, or if the intersection lies within the built-up area of an isolated community having a population of less than 10,000, the traffic volumes in the 56 percent columns in Table 4C-1 may be used in place of the 80 percent columns.

Standard 2 (Combination of Conditions A and B) should be applied only after an adequate trial of other alternatives that could cause less delay and inconvenience to traffic have failed to solve the traffic problems.

It can be seen from the Traffic Signal Warrant Analysis that **three (3) hours of Condition A and seven (7) hours of Condition B** are met. Therefore this standard is not met.

The conditions for Standard 1 and 2 are not satisfied, so this warrant is not met.

Warrant 2 – Four-Hour Vehicular Volume
This warrant is considered to be satisfied where the volume of intersecting traffic is the principal reason to consider installing a traffic control signal.

> *The need for a traffic control signal shall be considered if an engineering study finds that for each of any four (4) hours of an average day, the plotted points representing the vehicles per hour on the major street (total of both approaches) and the corresponding vehicles per hour on the higher volume minor street approach (one direction only) all fall above the applicable curve in Figure 4C-1 for the existing combination of approach lanes. On the minor street, the higher volume shall not be required to be on the same approach during each of these four (4) hours.*

There is an option to use the traffic volume plots in Figure 4C-2 when the intersection lies within the built-up area of an isolated community having a population of less than 10,000 or when the predominant travel speed on the major roadway exceeds 40 mph. The 85th Percentile speed limit along Snouffer School Road is expected to exceed 40 mph, therefore traffic volume plots in Figure 4C-2 are used.

It can be seen from the Traffic Signal Warrant Analysis that four (4) hour meets the criteria. Therefore, this warrant is met.

Warrant 3 – Peak Hour
The Peak Hour signal warrant is intended for use at a location where traffic conditions are such that for a minimum of one (1) hour of an average day, the minor street suffers undue delay when entering or crossing the major street.

This warrant is not applicable.

Major Street?	**North-South:**	Yes	**East-West:**	No	
Right Turns Removed?	**North:**	No	**East:**	No	
	South:	No	**West:**	No	

Time Period	Traffic From East On: *North Driveway*	Traffic From West On: *Alliston Hollow Way*	Max	Traffic From North On: *Snouffers School Road*	Traffic From South On: *Snouffers School Road*	*Snouffers School Road*	Total All Approaches
6:00 - 7:00	0	48	48	870	265	1,135	1,183
7:00 - 8:00	0	48	48	1,032	1,197	2,229	2,277
8:00 - 9:00	0	49	49	768	812	1,580	1,629
9:00 - 10:00	2	27	27	704	761	1,465	1,494
10:00 - 11:00	3	13	13	470	507	977	994
11:00 - 12:00	31	22	31	369	387	756	810
12:00 - 1:00	87	10	87	398	509	906	1,003
1:00 - 2:00	14	8	14	390	539	930	951
2:00 - 3:00	35	22	35	375	394	769	826
3:00 - 4:00	72	19	72	409	429	838	929
4:00 - 5:00	140	38	140	292	304	596	774
5:00 - 6:00	113	34	113	307	318	625	772
6:00 - 7:00	0	22	22	270	330	600	622
Total	**497**	**361**	**699**	**6,653**	**6,753**	**13,406**	**14,264**

Effect of Right Turn

Time	Traffic From East On: North Driveway All Traffic	Rights	Lefts & Thrus	Traffic from West On: Alliston Hollow Way All Traffic	Rights	Lefts & Thrus
6:00 - 7:00	0	0	0	48	46	2
7:00 - 8:00	0	0	0	48	36	12
8:00 - 9:00	0	0	0	49	27	22
9:00 - 10:00	2	0	2	27	18	9
10:00 - 11:00	3	3	0	13	9	4
11:00 - 12:00	31	3	28	22	15	7
12:00 - 1:00	87	8	79	10	7	3
1:00 - 2:00	14	2	12	8	5	3
2:00 - 3:00	35	4	31	22	15	7
3:00 - 4:00	72	7	65	19	13	6
4:00 - 5:00	140	14	126	38	23	15
5:00 - 6:00	113	11	102	34	23	11
6:00 - 7:00	0	0	0	22	18	4
TOTAL	**497**	**52**	**445**	**361**	**255**	**106**

Effect of Right Turn

Time	Traffic From North On: Snouffers School Road All Traffic	Rights	Lefts & Thrus	Traffic From South On: Snouffers School Road All Traffic	Rights	Lefts & Thrus
6:00 - 7:00	870	42	828	265	113	152
7:00 - 8:00	1,032	0	1,032	1,197	165	1,032
8:00 - 9:00	768	5	763	812	39	773
9:00 - 10:00	704	53	651	761	5	756
10:00 - 11:00	470	23	447	507	14	493
11:00 - 12:00	369	18	351	387	0	387
12:00 - 1:00	398	19	378	509	92	417
1:00 - 2:00	390	19	372	539	130	409
2:00 - 3:00	375	19	356	394	0	394
3:00 - 4:00	409	20	388	429	0	429
4:00 - 5:00	292	12	280	304	0	304
5:00 - 6:00	307	11	296	318	0	318
6:00 - 7:00	270	6	264	330	54	276
TOTAL	**6,653**	**248**	**6,406**	**6,753**	**612**	**6,141**

INTERSECTION GEOMETRY		COMMUNITY/MAJOR STREET SPEED CHARACTERISTICS
Number of Lanes for moving traffic on each approach		CONDITION C
Major Street	Minor Street	*A - Basic minimum hourly volume*
1	1	*B - Used for combination of Conditions A and B after trial of other remedial measures*
		C - May be used when the major street speed exceeds 70 km/h (40 mph) or in an isolated community with a population of less than 10,000
		D - May be used for combination of Conditions A and B after adequate trial of other remedial measures when the major-street speed exceeds 70 km/h (40 mph) or in an isolated community with a population of less than 10,000

CONDITION A - MINIMUM VEHICULAR VOLUME

Number of lanes for moving traffic on each approach		Vehicles per hour on major street (total of both approaches)				Vehicles per hour on higher-volume minor-street approach			
Major Street	Minor Street	100%	80%	70%	56%	100%	80%	70%	56%
1	1	500	400	350	280	150	120	105	84
2 or more	1	600	480	420	336	150	120	105	84
2 or more	2 or more	600	480	420	336	200	160	140	112
1	2 or more	500	400	350	280	200	160	140	112

	MAJOR SREET	MINOR STREET
MINIMUM CRITERIA:	350	105

CONDITION B - INTERRUPTION OF CONTINUOUS TRAFFIC

Number of lanes for moving traffic on each approach		Vehicles per hour on major street (total of both approaches)				Vehicles per hour on higher-volume minor-street approach			
Major Street	Minor Street	100%	80%	70%	56%	100%	80%	70%	56%
1	1	750	600	525	420	75	60	53	42
2 or more	1	900	720	630	504	75	60	53	42
2 or more	2 or more	900	720	630	504	100	80	70	56
1	2 or more	750	600	525	420	100	80	70	56

	MAJOR SREET	MINOR STREET
MINIMUM CRITERIA:	525	53

SUMMARY OF HOURS MET

HOUR	CONDITION A	
	MAJOR STEET	MINOR STREET
6:00 - 7:00	YES	NO
7:00 - 8:00	YES	NO
8:00 - 9:00	YES	NO
9:00 - 10:00	YES	NO
10:00 - 11:00	YES	NO
11:00 - 12:00	YES	NO
12:00 - 1:00	YES	NO
1:00 - 2:00	YES	NO
2:00 - 3:00	YES	NO
3:00 - 4:00	YES	NO
4:00 - 5:00	YES	YES
5:00 - 6:00	YES	YES
6:00 - 7:00	YES	NO
Hours Met	**13**	**2**

HOUR	CONDITION B	
	MAJOR STEET	MINOR STREET
6:00 - 7:00	YES	NO
7:00 - 8:00	YES	NO
8:00 - 9:00	YES	NO
9:00 - 10:00	YES	NO
10:00 - 11:00	YES	NO
11:00 - 12:00	YES	NO
12:00 - 1:00	YES	YES
1:00 - 2:00	YES	NO
2:00 - 3:00	YES	NO
3:00 - 4:00	YES	YES
4:00 - 5:00	YES	YES
5:00 - 6:00	YES	YES
6:00 - 7:00	YES	NO
Hours Met	**13**	**4**

INTERSECTION GEOMETRY		COMMUNITY/MAJOR STREET SPEED CHARACTERISTICS
Number of Lanes for moving traffic on each approach		CONDITION D
Major Street	Minor Street	*A - Basic minimum hourly volume*
1	1	*B - Used for combination of Conditions A and B after trial of other remedial measures*
		C - May be used when the major street speed exceeds 70 km/h (40 mph) or in an isolated community with a population of less than 10,000
		D - May be used for combination of Conditions A and B after adequate trial of other remedial measures when the major-street speed exceeds 70 km/h (40 mph) or in an isolated community with a population of less than 10,000

CONDITION A - MINIMUM VEHICULAR VOLUME

Number of lanes for moving traffic on each approach		Vehicles per hour on major street (total of both approaches)				Vehicles per hour on higher-volume minor-street approach			
Major Street	Minor Street	100%	80%	70%	56%	100%	80%	70%	56%
1	1	500	400	350	280	150	120	105	84
2 or more	1	600	480	420	336	150	120	105	84
2 or more	2 or more	600	480	420	336	200	160	140	112
1	2 or more	500	400	350	280	200	160	140	112

	MAJOR SREET	MINOR STREET
MINIMUM CRITERIA:	280	84

CONDITION B - INTERRUPTION OF CONTINUOUS TRAFFIC

Number of lanes for moving traffic on each approach		Vehicles per hour on major street (total of both approaches)				Vehicles per hour on higher-volume minor-street approach			
Major Street	Minor Street	100%	80%	70%	56%	100%	80%	70%	56%
1	1	750	600	525	420	75	60	53	42
2 or more	1	900	720	630	504	75	60	53	42
2 or more	2 or more	900	720	630	504	100	80	70	56
1	2 or more	750	600	525	420	100	80	70	56

	MAJOR SREET	MINOR STREET
MINIMUM CRITERIA:	420	42

SUMMARY OF HOURS MET

HOUR	CONDITION A	
	MAJOR STEET	MINOR STREET
6:00 - 7:00	YES	NO
7:00 - 8:00	YES	NO
8:00 - 9:00	YES	NO
9:00 - 10:00	YES	NO
10:00 - 11:00	YES	NO
11:00 - 12:00	YES	NO
12:00 - 1:00	YES	YES
1:00 - 2:00	YES	NO
2:00 - 3:00	YES	NO
3:00 - 4:00	YES	NO
4:00 - 5:00	YES	YES
5:00 - 6:00	YES	YES
6:00 - 7:00	YES	NO
Hours Met	**13**	**3**

HOUR	CONDITION B	
	MAJOR STEET	MINOR STREET
6:00 - 7:00	YES	YES
7:00 - 8:00	YES	YES
8:00 - 9:00	YES	YES
9:00 - 10:00	YES	NO
10:00 - 11:00	YES	NO
11:00 - 12:00	YES	NO
12:00 - 1:00	YES	YES
1:00 - 2:00	YES	NO
2:00 - 3:00	YES	NO
3:00 - 4:00	YES	YES
4:00 - 5:00	YES	YES
5:00 - 6:00	YES	YES
6:00 - 7:00	YES	NO
Hours Met	**13**	**7**

COMMUNITY/MAJOR STREET SPEED CHARACTERISTICS

CONDITION **B**

A - Basic minimum hourly volume
B - May be used when the major street speed exceeds 70 km/h (40 mph) or in an isolated community with a population of less than 10,000

12-HOUR VOLUME SUMMARY

Time	Snouffers School Road	North Driveway	Alliston Hollow Way
6:00 - 7:00	1,135	0	48
7:00 - 8:00	2,229	0	48
8:00 - 9:00	1,580	0	49
9:00 - 10:00	1,465	2	27
10:00 - 11:00	977	3	13
11:00 - 12:00	756	31	22
12:00 - 1:00	906	87	10
1:00 -2:00	930	14	8
2:00 - 3:00	769	35	22
3:00 - 4:00	838	72	19
4:00 - 5:00	596	140	38
5:00 - 6:00	625	113	34
6:00 - 7:00	600	0	22

GRAPHIC SUMMARY

Figure 4C-2. Warrant 2 - Four-Hour Vehicular Volume (70% Factor)

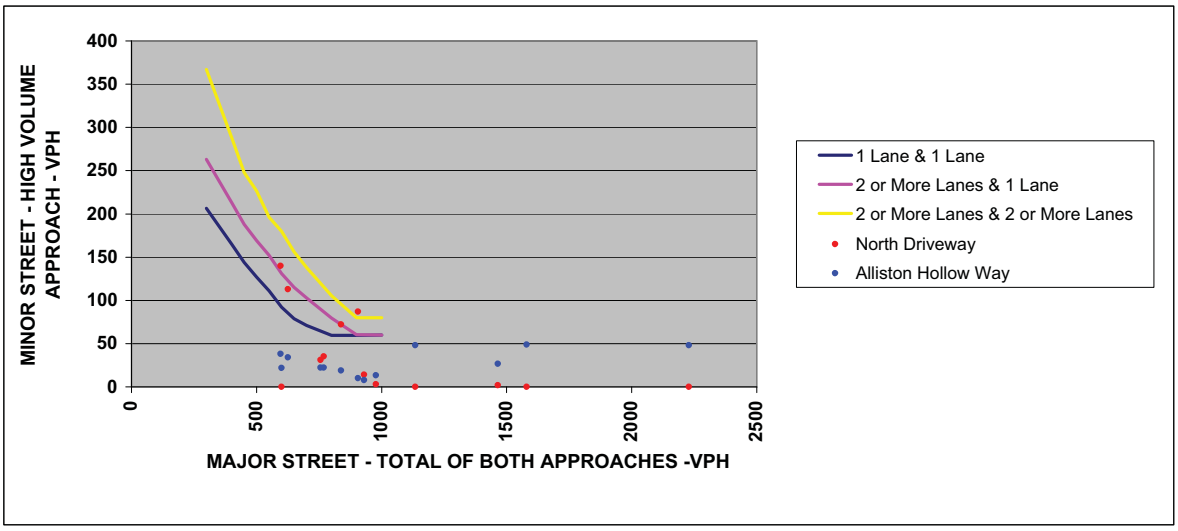

* NOTE: 80 vph applies as the lower threshold volume for a minor street approach with two or more lanes and 60 vph applies as the lower threshold volume for a minor street approach with one lane

WARRANT 2 SUMMARY

Sidestreet	Hours Met
North Driveway	4
Alliston Hollow Way	0

APPENDIX

J

Recommended Improvements CLV Analysis Worksheets
Recommended Improvements Synchro/SimTraffic Analysis Worksheets

Critical Lane Volume Methodology
Turning Movement Summary and Level of Service

Prepared by: **STV Inc.**

Count Date: 2/26/2009 | Location: Snouffer School Road at Centerway Road
Conditions: Future with Recommended Improvements
Design Year: 2012 | Computed by: MMO | Date 11/17/2009

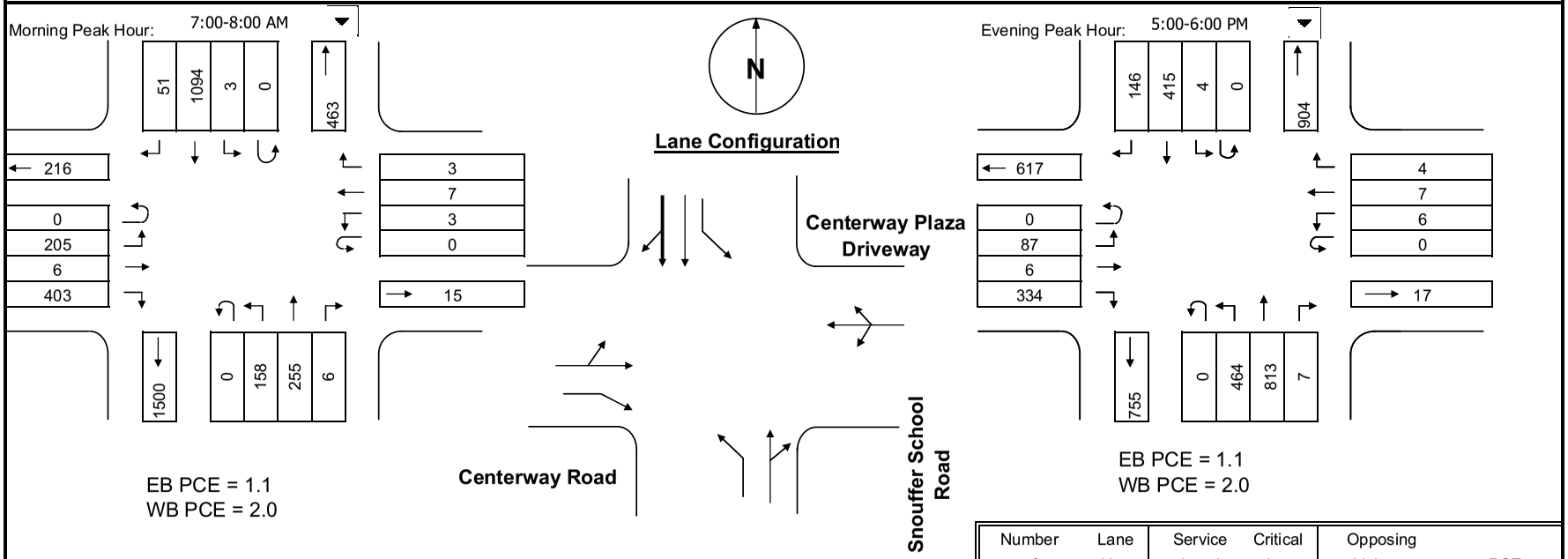

Number of Lanes	Lane Use Factor	Service Level	Critical Lane Vol	Opposing Volume (VPH)	PCE
1 = 1.00		A <= 1000		<= 199	1.1
2 = 0.53		B <= 1150		<= 599	2.0
3 = 0.37		C <= 1300		<= 799	3.0
4 = 0.30		D <= 1450		<= 999	4.0
5 = 0.25		E <= 1600		> 1000	5.0
		F > 1600			

Phasing

RTOR/Overlap
- ☐ Northbound
- ☐ Southbound
- ☑ Eastbound
- ☐ Westbound

Split Phasing
- ○ East/West
- ○ North/South
- ◉ None

Inx. Control
- ◉ Signal
- ○ Stop

Phase	Movement	Volume 1	Lane Use Factor - 2	Lane volume 1 X 2	Opposing Movement	Critical In. volume	*	Phase	Movement	Volume 1	Lane Use Factor - 2	Lane volume 1 X 2	Opposing Movement	Critical In. Volume	*
	NB	261	1.00	261	3	264			NB	820	1.00	820	4	824	
	SB	607	1.00	607	158	765	*		SB	415	1.00	415	464	879	*
	EB	245	1.00	245	3	248	*		EB	102	1.00	102	6	108	*
	WB	16	1.00	16	205	221			WB	18	1.00	18	87	105	
Remarks:			* Critical volume		Total	**1013**		Remarks:			* Critical volume		Total	**987**	
						0.63	**B**							**0.62**	**A**

Movement	EBL	EBT	EBR	WBL	WBT	WBR	NBL	NBT	NBR	SBL	SBT	SBR
Lane Configurations												
Volume (vph)	205	6	403	3	7	3	158	255	6	3	1094	51
Ideal Flow (vphpl)	1900	1900	1900	1900	1900	1900	1900	1900	1900	1900	1900	1900
Total Lost time (s)		5.0	4.0		5.0		4.0	5.0		5.0	5.0	
Lane Util. Factor		1.00	1.00		1.00		1.00	1.00		1.00	0.95	
Frt		1.00	0.85		0.97		1.00	1.00		1.00	0.99	
Flt Protected		0.95	1.00		0.99		0.95	1.00		0.95	1.00	
Satd. Flow (prot)		1776	1583		1784		1770	1856		1770	3516	
Flt Permitted		0.72	1.00		0.94		0.11	1.00		0.60	1.00	
Satd. Flow (perm)		1347	1583		1691		209	1856		1114	3516	
Peak-hour factor, PHF	1.00	1.00	1.00	1.00	1.00	1.00	1.00	1.00	1.00	1.00	1.00	1.00
Adj. Flow (vph)	205	6	403	3	7	3	158	255	6	3	1094	51
RTOR Reduction (vph)	0	0	39	0	2	0	0	1	0	0	4	0
Lane Group Flow (vph)	0	211	364	0	11	0	158	260	0	3	1141	0
Turn Type	Perm		pm+ov	Perm			pm+pt			Perm		
Protected Phases		4	5		8		5	2			6	
Permitted Phases	4		4	8			2			6		
Actuated Green, G (s)		16.4	27.0		16.4		46.2	46.2		31.6	31.6	
Effective Green, g (s)		16.4	27.0		16.4		46.2	46.2		31.6	31.6	
Actuated g/C Ratio		0.23	0.37		0.23		0.64	0.64		0.44	0.44	
Clearance Time (s)		5.0	4.0		5.0		4.0	5.0		5.0	5.0	
Vehicle Extension (s)		3.0	3.0		3.0		3.0	3.0		3.0	3.0	
Lane Grp Cap (vph)		304	589		382		361	1181		485	1530	
v/s Ratio Prot			c0.09				0.06	0.14			c0.32	
v/s Ratio Perm		c0.16	0.14		0.01		0.21			0.00		
v/c Ratio		0.69	0.62		0.03		0.44	0.22		0.01	0.75	
Uniform Delay, d1		25.8	18.6		21.9		9.3	5.6		11.6	17.1	
Progression Factor		1.00	1.00		1.00		1.00	1.00		1.00	1.00	
Incremental Delay, d2		6.7	1.9		0.0		0.9	0.1		0.0	2.0	
Delay (s)		32.5	20.5		21.9		10.1	5.7		11.6	19.2	
Level of Service		C	C		C		B	A		B	B	
Approach Delay (s)		24.6			21.9			7.4			19.1	
Approach LOS		C			C			A			B	

Intersection Summary

HCM Average Control Delay	18.4	HCM Level of Service	B
HCM Volume to Capacity ratio	0.71		
Actuated Cycle Length (s)	72.6	Sum of lost time (s)	14.0
Intersection Capacity Utilization	71.8%	ICU Level of Service	C
Analysis Period (min)	15		

c Critical Lane Group

Movement	EBL	EBT	EBR	WBL	WBT	WBR	NBL	NBT	NBR	SBL	SBT	SBR
Lane Configurations												
Volume (vph)	10	0	48	4	0	1	7	176	164	19	1085	20
Ideal Flow (vphpl)	1900	1900	1900	1900	1900	1900	1900	1900	1900	1900	1900	1900
Total Lost time (s)		4.5			4.5			6.5	6.5		6.5	6.5
Lane Util. Factor		1.00			1.00			1.00	1.00		1.00	1.00
Frpb, ped/bikes		0.87			1.00			1.00	1.00		1.00	1.00
Flpb, ped/bikes		1.00			1.00			1.00	1.00		1.00	1.00
Frt		0.89			0.97			1.00	0.85		1.00	0.85
Flt Protected		0.99			0.96			1.00	1.00		1.00	1.00
Satd. Flow (prot)		1418			1743			1859	1583		1861	1583
Flt Permitted		0.94			0.85			0.96	1.00		0.99	1.00
Satd. Flow (perm)		1342			1533			1795	1583		1852	1583
Peak-hour factor, PHF	1.00	1.00	1.00	1.00	1.00	1.00	1.00	1.00	1.00	1.00	1.00	1.00
Adj. Flow (vph)	10	0	48	4	0	1	7	176	164	19	1085	20
RTOR Reduction (vph)	0	45	0	0	1	0	0	0	28	0	0	2
Lane Group Flow (vph)	0	13	0	0	4	0	0	183	136	0	1104	18
Confl. Peds. (#/hr)	9		45									
Turn Type	Perm			Perm			Perm		Perm	Perm		Perm
Protected Phases		4			8			2			6	
Permitted Phases	4			8			2		2	6		6
Actuated Green, G (s)		6.0			6.0			83.5	83.5		83.5	83.5
Effective Green, g (s)		6.0			6.0			83.5	83.5		83.5	83.5
Actuated g/C Ratio		0.06			0.06			0.83	0.83		0.83	0.83
Clearance Time (s)		4.5			4.5			6.5	6.5		6.5	6.5
Vehicle Extension (s)		3.0			3.0			3.0	3.0		3.0	3.0
Lane Grp Cap (vph)		80			92			1491	1315		1539	1315
v/s Ratio Prot												
v/s Ratio Perm		c0.01			0.00			0.10	0.09		c0.60	0.01
v/c Ratio		0.16			0.04			0.12	0.10		0.72	0.01
Uniform Delay, d1		44.9			44.5			1.6	1.6		3.6	1.5
Progression Factor		1.00			1.00			1.00	1.00		1.00	1.00
Incremental Delay, d2		0.9			0.2			0.2	0.2		2.9	0.0
Delay (s)		45.8			44.7			1.8	1.7		6.5	1.5
Level of Service		D			D			A	A		A	A
Approach Delay (s)		45.8			44.7			1.8			6.4	
Approach LOS		D			D			A			A	

Intersection Summary			
HCM Average Control Delay	6.9	HCM Level of Service	A
HCM Volume to Capacity ratio	0.68		
Actuated Cycle Length (s)	100.5	Sum of lost time (s)	11.0
Intersection Capacity Utilization	94.7%	ICU Level of Service	F
Analysis Period (min)	15		

c Critical Lane Group

Movement	WBL	WBR	NBT	NBR	SBL	SBT
Lane Configurations						
Volume (veh/h)	92	0	380	85	10	1127
Sign Control	Stop		Free			Free
Grade	0%		0%			0%
Peak Hour Factor	1.00	1.00	1.00	1.00	1.00	1.00
Hourly flow rate (vph)	92	0	380	85	10	1127
Pedestrians						
Lane Width (ft)						
Walking Speed (ft/s)						
Percent Blockage						
Right turn flare (veh)						
Median type			None			None
Median storage veh)						
Upstream signal (ft)			861			
pX, platoon unblocked						
vC, conflicting volume	1527	380			465	
vC1, stage 1 conf vol						
vC2, stage 2 conf vol						
vCu, unblocked vol	1527	380			465	
tC, single (s)	*4.5	6.2			4.1	
tC, 2 stage (s)						
tF (s)	*2.0	3.3			2.2	
p0 queue free %	77	100			99	
cM capacity (veh/h)	392	667			1096	

Direction, Lane #	WB 1	NB 1	NB 2	SB 1
Volume Total	92	380	85	1137
Volume Left	92	0	0	10
Volume Right	0	0	85	0
cSH	392	1700	1700	1096
Volume to Capacity	0.23	0.22	0.05	0.01
Queue Length 95th (ft)	22	0	0	1
Control Delay (s)	17.0	0.0	0.0	0.3
Lane LOS	C			A
Approach Delay (s)	17.0	0.0		0.3
Approach LOS	C			

Intersection Summary			
Average Delay	1.1		
Intersection Capacity Utilization	79.0%	ICU Level of Service	D
Analysis Period (min)	15		

* User Entered Value

Movement	EBL	EBT	EBR	WBL	WBT	WBR	NBL	NBT	NBR	SBL	SBT	SBR
Lane Configurations												
Volume (vph)	218	663	165	171	722	416	194	779	143	200	373	195
Ideal Flow (vphpl)	1900	1900	1900	1900	1900	1900	1900	1900	1900	1900	1900	1900
Total Lost time (s)	5.0	5.0	5.0	5.0	5.0	5.0	4.0	5.0	5.0	4.0	5.0	5.0
Lane Util. Factor	1.00	0.95	1.00	0.91	0.91	1.00	1.00	0.95	1.00	1.00	0.95	1.00
Frt	1.00	1.00	0.85	1.00	1.00	0.85	1.00	1.00	0.85	1.00	1.00	0.85
Flt Protected	0.95	1.00	1.00	0.95	1.00	1.00	0.95	1.00	1.00	0.95	1.00	1.00
Satd. Flow (prot)	1770	3539	1583	1610	3386	1583	1770	3539	1583	1770	3539	1583
Flt Permitted	0.95	1.00	1.00	0.95	1.00	1.00	0.36	1.00	1.00	0.14	1.00	1.00
Satd. Flow (perm)	1770	3539	1583	1610	3386	1583	669	3539	1583	258	3539	1583
Peak-hour factor, PHF	0.92	0.92	0.92	0.92	0.92	0.92	0.92	0.92	0.92	0.92	0.92	0.92
Adj. Flow (vph)	237	721	179	186	785	452	211	847	155	217	405	212
RTOR Reduction (vph)	0	0	136	0	0	234	0	0	115	0	0	161
Lane Group Flow (vph)	237	721	43	167	804	218	211	847	40	217	405	51
Turn Type	Split		Perm	Split		Perm	pm+pt		Perm	pm+pt		Perm
Protected Phases	2	2		6	6		3	8		7	4	
Permitted Phases			2			6	8		8	4		4
Actuated Green, G (s)	29.0	29.0	29.0	30.0	30.0	30.0	44.1	31.0	31.0	39.9	28.9	28.9
Effective Green, g (s)	29.0	29.0	29.0	30.0	30.0	30.0	44.1	31.0	31.0	39.9	28.9	28.9
Actuated g/C Ratio	0.24	0.24	0.24	0.25	0.25	0.25	0.37	0.26	0.26	0.33	0.24	0.24
Clearance Time (s)	5.0	5.0	5.0	5.0	5.0	5.0	4.0	5.0	5.0	4.0	5.0	5.0
Vehicle Extension (s)	3.0	3.0	3.0	3.0	3.0	3.0	3.0	3.0	3.0	3.0	3.0	3.0
Lane Grp Cap (vph)	428	855	383	403	847	396	366	914	409	224	852	381
v/s Ratio Prot	0.13	c0.20		0.10	c0.24		c0.06	c0.24		c0.09	0.11	
v/s Ratio Perm			0.03			0.14	0.15		0.03	0.23		0.03
v/c Ratio	0.55	0.84	0.11	0.41	0.95	0.55	0.58	0.93	0.10	0.97	0.48	0.13
Uniform Delay, d1	39.8	43.3	35.5	37.7	44.3	39.1	27.7	43.4	33.9	33.3	39.1	35.7
Progression Factor	1.00	1.00	1.00	1.00	1.00	1.00	1.00	1.00	1.00	1.00	1.00	1.00
Incremental Delay, d2	5.1	9.9	0.6	0.7	19.4	1.7	2.2	16.6	0.5	50.7	0.4	0.2
Delay (s)	44.9	53.3	36.1	38.3	63.7	40.8	29.9	60.0	34.3	84.0	39.5	35.9
Level of Service	D	D	D	D	E	D	C	E	C	F	D	D
Approach Delay (s)		48.8			53.4			51.5			50.1	
Approach LOS		D			D			D			D	

Intersection Summary

HCM Average Control Delay	51.2	HCM Level of Service	D
HCM Volume to Capacity ratio	0.91		
Actuated Cycle Length (s)	120.0	Sum of lost time (s)	18.0
Intersection Capacity Utilization	86.7%	ICU Level of Service	E
Analysis Period (min)	15		

c Critical Lane Group

Movement	EBL	EBT	EBR	WBL	WBT	WBR	NBL	NBT	NBR	SBL	SBT	SBR
Lane Configurations												
Volume (vph)	87	6	334	6	7	4	464	813	7	4	415	146
Ideal Flow (vphpl)	1900	1900	1900	1900	1900	1900	1900	1900	1900	1900	1900	1900
Total Lost time (s)		5.0	4.0		4.0		4.0	5.0		5.0	5.0	
Lane Util. Factor		1.00	1.00		1.00		1.00	1.00		1.00	0.95	
Frt		1.00	0.85		0.97		1.00	1.00		1.00	0.96	
Flt Protected		0.96	1.00		0.98		0.95	1.00		0.95	1.00	
Satd. Flow (prot)		1780	1583		1777		1770	1860		1770	3401	
Flt Permitted		0.73	1.00		0.90		0.25	1.00		0.33	1.00	
Satd. Flow (perm)		1354	1583		1621		473	1860		621	3401	
Peak-hour factor, PHF	0.92	0.92	0.92	0.92	0.92	0.92	0.92	0.92	0.92	0.92	0.92	0.92
Adj. Flow (vph)	95	7	363	7	8	4	504	884	8	4	451	159
RTOR Reduction (vph)	0	0	83	0	3	0	0	0	0	0	37	0
Lane Group Flow (vph)	0	102	280	0	16	0	504	892	0	4	573	0
Turn Type	Perm		pm+ov	Perm			pm+pt			Perm		
Protected Phases		4	5		8		5	2			6	
Permitted Phases	4		4	8			2			6		
Actuated Green, G (s)		8.2	29.4		9.2		42.4	42.4		17.2	17.2	
Effective Green, g (s)		8.2	29.4		9.2		42.4	42.4		17.2	17.2	
Actuated g/C Ratio		0.14	0.49		0.15		0.70	0.70		0.28	0.28	
Clearance Time (s)		5.0	4.0		4.0		4.0	5.0		5.0	5.0	
Vehicle Extension (s)		3.0	3.0		3.0		3.0	3.0		3.0	3.0	
Lane Grp Cap (vph)		183	768		246		785	1301		176	965	
v/s Ratio Prot			0.13				0.22	c0.48			0.17	
v/s Ratio Perm		c0.08	0.05		0.01		0.22			0.01		
v/c Ratio		0.56	0.36		0.06		0.64	0.69		0.02	0.59	
Uniform Delay, d1		24.5	9.8		22.0		6.0	5.3		15.6	18.7	
Progression Factor		1.00	1.00		1.00		1.00	1.00		1.00	1.00	
Incremental Delay, d2		3.6	0.3		0.1		1.8	1.5		0.1	1.0	
Delay (s)		28.2	10.1		22.1		7.8	6.8		15.7	19.7	
Level of Service		C	B		C		A	A		B	B	
Approach Delay (s)		14.0			22.1			7.1			19.7	
Approach LOS		B			C			A			B	

Intersection Summary

HCM Average Control Delay	11.6	HCM Level of Service	B
HCM Volume to Capacity ratio	0.66		
Actuated Cycle Length (s)	60.6	Sum of lost time (s)	10.0
Intersection Capacity Utilization	73.2%	ICU Level of Service	D
Analysis Period (min)	15		

c Critical Lane Group

Movement	EBL	EBT	EBR	WBL	WBT	WBR	NBL	NBT	NBR	SBL	SBT	SBR
Lane Configurations												
Volume (vph)	13	0	36	101	0	12	38	814	4	79	374	11
Ideal Flow (vphpl)	1900	1900	1900	1900	1900	1900	1900	1900	1900	1900	1900	1900
Total Lost time (s)		4.0			4.0			4.0	4.0		4.0	4.0
Lane Util. Factor		1.00			1.00			1.00	1.00		1.00	1.00
Frpb, ped/bikes		0.88			1.00			1.00	1.00		1.00	1.00
Flpb, ped/bikes		1.00			1.00			1.00	1.00		1.00	1.00
Frt		0.90			0.99			1.00	0.85		1.00	0.85
Flt Protected		0.99			0.96			1.00	1.00		0.99	1.00
Satd. Flow (prot)		1456			1758			1859	1583		1847	1583
Flt Permitted		0.93			0.76			0.96	1.00		0.71	1.00
Satd. Flow (perm)		1379			1405			1797	1583		1327	1583
Peak-hour factor, PHF	0.92	0.92	0.92	0.92	0.92	0.92	0.92	0.92	0.92	0.92	0.92	0.92
Adj. Flow (vph)	14	0	39	110	0	13	41	885	4	86	407	12
RTOR Reduction (vph)	0	34	0	0	4	0	0	0	1	0	0	3
Lane Group Flow (vph)	0	19	0	0	119	0	0	926	3	0	493	9
Confl. Peds. (#/hr)	9		45									
Turn Type	Perm			Perm			Perm		Perm	Perm		Perm
Protected Phases		4			8			2			6	
Permitted Phases	4			8			2		2	6		6
Actuated Green, G (s)		13.0			13.0			79.0	79.0		79.0	79.0
Effective Green, g (s)		13.0			13.0			79.0	79.0		79.0	79.0
Actuated g/C Ratio		0.13			0.13			0.79	0.79		0.79	0.79
Clearance Time (s)		4.0			4.0			4.0	4.0		4.0	4.0
Vehicle Extension (s)		3.0			3.0			3.0	3.0		3.0	3.0
Lane Grp Cap (vph)		179			183			1420	1251		1048	1251
v/s Ratio Prot												
v/s Ratio Perm		0.01			c0.08			c0.52	0.00		0.37	0.01
v/c Ratio		0.11			0.65			0.65	0.00		0.47	0.01
Uniform Delay, d1		38.4			41.3			4.5	2.2		3.5	2.2
Progression Factor		1.00			1.00			1.00	1.00		1.00	1.00
Incremental Delay, d2		0.3			7.7			2.3	0.0		1.5	0.0
Delay (s)		38.6			49.0			6.9	2.2		5.0	2.2
Level of Service		D			D			A	A		A	A
Approach Delay (s)		38.6			49.0			6.9			5.0	
Approach LOS		D			D			A			A	

Intersection Summary			
HCM Average Control Delay	10.5	HCM Level of Service	B
HCM Volume to Capacity ratio	0.65		
Actuated Cycle Length (s)	100.0	Sum of lost time (s)	8.0
Intersection Capacity Utilization	92.0%	ICU Level of Service	F
Analysis Period (min)	15		

c Critical Lane Group

Movement	WBL	WBR	NBT	NBR	SBL	SBT
Lane Configurations						
Volume (veh/h)	4	1	905	4	1	510
Sign Control	Stop		Free			Free
Grade	0%		0%			0%
Peak Hour Factor	0.92	0.92	0.92	0.92	0.92	0.92
Hourly flow rate (vph)	4	1	984	4	1	554
Pedestrians						
Lane Width (ft)						
Walking Speed (ft/s)						
Percent Blockage						
Right turn flare (veh)						
Median type			None			None
Median storage veh)						
Upstream signal (ft)			923			
pX, platoon unblocked	0.60	0.60			0.60	
vC, conflicting volume	1542	986			988	
vC1, stage 1 conf vol						
vC2, stage 2 conf vol						
vCu, unblocked vol	1570	648			651	
tC, single (s)	6.4	6.2			4.1	
tC, 2 stage (s)						
tF (s)	3.5	3.3			2.2	
p0 queue free %	94	100			100	
cM capacity (veh/h)	73	284			564	

Direction, Lane #	WB 1	NB 1	SB 1
Volume Total	5	988	555
Volume Left	4	0	1
Volume Right	1	4	0
cSH	86	1700	564
Volume to Capacity	0.06	0.58	0.00
Queue Length 95th (ft)	5	0	0
Control Delay (s)	49.6	0.0	0.1
Lane LOS	E		A
Approach Delay (s)	49.6	0.0	0.1
Approach LOS	E		

Intersection Summary			
Average Delay		0.2	
Intersection Capacity Utilization		57.9%	ICU Level of Service B
Analysis Period (min)		15	