White Flint
Traffic Operations Analysis

White Flint Sector Plan

Prepared for:
Montgomery county Department of Public Works and Transportation

Prepared by:
Stantec Consulting Services Inc.

April 7, 2014

Previous Draft:
March 24, 2014

Table of Contents

EXECUTIVE SUMMARY I

1.0 INTRODUCTION 1
1.1 HISTORY 1
1.2 SCOPE 1

2.0 EXISTING CONDITIONS 4
2.1 EXISTING TRAFFIC VOLUMES 4
2.2 EXISTING TRAFFIC OPERATIONS 7

3.0 BACKGROUND TRAFFIC CONDITIONS 10
3.1 PLANNED ROAD IMPROVEMENTS 10
3.2 BACKGROUND THROUGH TRIPS AND GROWTH 11
3.3 PIPELINE DEVELOPMENTS 12

4.0 2022 FUTURE CONDITIONS 15
4.1 2022 TRIP GENERATION 15
4.2 2022 ROADWAY NETWORK 19
4.3 2022 TRIP DISTRIBUTION AND TRAFFIC ASSIGNMENTS 20
4.4 2022 TRAFFIC OPERATIONS 23

5.0 2042 FULL BUILD OUT CONDITIONS 26
5.1 2042 FULL BUILDOUT TRIP GENERATION 26
5.2 2042 FULL BUILDOUT ROADWAY NETWORK 28
5.3 2042 TRIP DISTRIBUTION AND TRAFFIC ASSIGNMENTS 28
5.4 2042 TRAFFIC OPERATIONS 31
5.4.1 2042 No Growth Scenario Test 34

6.0 CONCLUSION AND POTENTIAL MITIGATION 36

LIST OF TABLES

Table 1: Existing CLV Level of Service 7
Table 2: AADT Growth on MD 355 12
Table 3: Pipeline Developments 12
Table 4: Trip Generation Rates and Equations 17
Table 5: 2022 Block by Block Trip Generation 17
Table 6: 2022 CLV Analysis Results 24
Table 7: 2042 Block by Block Trip Generation 26
Table 8: 2042 Full Build Out CLV Analysis 32
Table 9: 2042 No Growth Selected Intersection CLV Analysis 34
Table 10: 2042 CLV Analysis with Mitigation 36

LIST OF FIGURES

Figure 1: Vicinity Map 2
Figure 2: Existing Road Network 4
Figure 3: Existing Traffic Volumes 5
Figure 4: Existing Road Network and Lane Use 6
Figure 5: Existing PM Level of Service Results 9
Figure 6: Planned Road Network 11
Figure 7: 2022 Regional Through Trips 13
Figure 8: 2042 Regional Through Trips 14
Figure 9: Block Number Map 15
Figure 10: Sector Plan Area Trip Assignments - 2022 21
Figure 11: Traffic Volume Forecasts - 2022 22
Figure 12 - 2022 PM CLV Level of Service Results 25
Figure 13: Sector Plan Area Trip Assignments - Full Build Out 29
Figure 14: Traffic Volume Forecasts - 2042 Full Build Out 30
Figure 15: 2042 PM CLV Level of Service Results 33
Figure 16: 2042 No Growth Traffic Forecast Volumes 35
Figure 17: Potential Mitigation Lane Use 37

APPENDICES

Appendix A – Count Data, Sector Plan Road Excepts
Appendix B – Existing CLV and HCM Analysis Worksheets
Appendix C – STV O-D and VISSIM Data and Analysis
Appendix D – 2022 CLV and HCM Analysis Worksheets
Appendix E – 2042 – Full Build Out CLV and HCM Analysis Worksheets

Executive Summary

Stantec (formerly Greenhorne & O'Mara) has been retained by the Montgomery County Department of Transportation (MCDOT) to provide Traffic Impact Analysis services for the White Flint Transportation Project located in Montgomery County, Maryland. The purpose of this study is to evaluate the potential traffic impacts associated with the development plan outlined in the White Flint Sector plan, approved April 2010 by the Montgomery County Council. The Maryland State Highway Administration (MD SHA) requested this study from MCDOT to serve as a technical tool in evaluating both the near and long term needs of the network as development occurs within the sector planning area.

While this traffic study has been prepared in accordance with the general standards and procedures of the Local Area Review study (MNCPPC Guidelines) it is important to view the results of the analysis in light of the 30+ year projected build-out. A number of key assumptions are required in order to prepare the analysis including: the actual absorption of development, land use splits, directional distributions, trip generation characteristics, and through trip growth rates. Changes in these assumptions can have a dramatic impact on the final results. While this study represents an operational review of traffic conditions within the Sector Planning area, rather than a planning overview as initially conducted by the MNCPPC, it still must be viewed as a planning tool in its projection of long term traffic conditions.

As noted within the M-NCPPC Sector Plan documents, the White Flint Sector Plan covers over 430 acres and is bounded by the CSX tracks to the east, Montrose Parkway to the north, Old Georgetown Road to the west and White Flint Mall to the south. The total build-out envisioned for the sector plan could potentially add 17.6 million square feet of new development, staged in three phases. Each phase has an associated non – auto driver mode share requirement and an identified series of transportation network improvements, including but not limited to highway network changes, pedestrian and bike amenities, and streetscape improvements. Specific mode share splits and network upgrades are detailed within the analysis section for each specific phase.

This traffic study was conducted following the criteria for a Montgomery County Local Area Traffic Review Study in that it reviewed traffic conditions in layers, beginning with existing conditions, adding background traffic (approved pipeline development and growth on major arterials), and then reviewing the incremental impact of the Sector Plan at the design years of 2022 and 2042.

Stantec, MCDOT, MNCPPC, and MD SHA worked together to establish the scope of the study. The study area for the project was expanded beyond the defined bounds of the sector plan area to ensure that the analysis identified not only the direct impacts within the Sector Planning Area but also those roadways and intersections on the perimeter that would be impacted by development activity within the sector.

The study area for the traffic analysis includes 40 intersections in and around the White Flint Sector Plan area. Intersection capacity analyses were conducted using the Critical Lane Volume technique (CLV) and Synchro HCM methodologies. The results of the capacity analyses are summarized in the main body of

the report, focusing on the CLV results. The HCM results, as calculated in the SYNCHRO analysis are included in the applicable appendix for each study period.

As noted, the sector plan calls for several changes to the existing roadway network. These changes would provide for a more efficient grid network, with short block lengths for pedestrians and more routing choices for vehicular movements. The planned changes include the realignment of Executive Blvd and MD 187 (Old Georgetown Road), the extension of Hoya Street south to MD 187, the construction of Montrose Parkway East, the construction of Main/Market Street between MD 187 and MD 355 (Rockville Pike), and the extension of Nebel Street south and west to MD 355.

In order to analyze the future condition with these planned network improvements, an origin-destination (O-D) study was conducted by STV, Inc. as part of their analysis for the White Flint Partnership, and the resulting data provided to Stantec. This O-D information was combined with Stantec / MD SHA volume data to produce base regional through traffic volumes. Stantec conducted a full review of the information provided and concurred that it represented a valid procedure to estimate the base condition for the future traffic analysis.

Because this traffic study focused on only the future development activity for sites located within the White Flint Sector Planning area, the MD SHA requested that a growth rate be applied to the key corridors to account for projected development activity outside the Sector Plan. Therefore compound growth was applied to MD 355, MD 187 and Montrose Parkway through the 2022 and 2042 design years.

The future White Flint development trip component is based on the development quantities defined in the White Flint Sector Plan, as approved by MNCPPC, and further refined by the development community (with MNCPPC review and concurrence) to reflect the current expectations and visions of the future development under both an interim 2022 design year as well as the 2042 build out year. The Non-Auto Driver Mode Share (NADMS) of 34 percent was applied to the 2022 development quantities and the full-build out NADMS of 50 percent for commercial development and 51 percent for residential development was then applied to all peak hour trips for the 2042 analysis, consistent with the approved White Flint Sector Plan. MCDOT is in the process of developing a TDM program for the White Flint Sector Planning Area with the purpose to detail current mode splits, evaluate the effectiveness of current programs and develop / enhance future programs to meet and exceed the goals of the Sector Plan. For the purpose of this study, it was assumed that the NADMS percentages will be achieved.

The remaining auto driver trips were then assigned to the planned roadway network for each scenario based on the distribution as outlined by M-NCPPC in their original analysis of the sector plan traffic impact.

The 2042 traffic volumes were analyzed using CLV and HCM methodologies. Under the 2042 conditions, fifteen of the study intersections are projected to operate above their policy area threshold during at least one (1) peak hour based on CLV analysis. Ten of these intersections exceed their policy area threshold by more than 10 percent, five of which are located within the Sector Plan area.

Physical mitigation opportunities that would increase the capacity of the intersections have been identified for the five intersections in the White Flint Policy area that exceed the threshold by more than

10 percent. If future monitoring of traffic conditions in this area indicate that actual congestion levels are approaching those forecast for full build out, these mitigation measures can be considered, along with additional TDM opportunities, to address the projected intersection capacity deficiencies. Because the intersections located outside the Sector Plan will continue to be the subject of future LATR studies associated with new development activity, the information provided by this study will assist in the development of those reviews, and individual mitigation plans will be required to address any potential deficiencies. These intersections outside of the sector plan area will also be addressed by an ongoing county CIP project.

ADDITIONAL STUDIES

It is important to understand that the results of this traffic analysis represent one alternative of the projected traffic conditions thirty years into the future, and should be viewed accordingly. This report has also tested the identified critical intersections without a growth rate on the main arterials to determine the potential difference in traffic conditions. The results of this test indicate that, while the projected conditions improve, the critical intersections are still projected to operate in excess of the acceptable standards for the policy area.

In addition to HCM and CLV methodologies conducted by Stantec, STV Inc., under the direction of the White Flint Partnership, has conducted a separate study of the White Flint Sector Plan area using VISSIM. STV shared the resulting initial information with Stantec for comparison. STV's VISSIM model was developed using the same base through traffic, growth rates, and trip generation information as Stantec's model, and included both the AM and PM peak hours of the 2042 scenario. The two models differ in that VISSIM's model includes more of the internal block roadways and access points, allowing for a finer-grained traffic assignment. Traffic traveling within the White Flint area is assigned more aggressively to the business level roadways.

Regardless of the method of analysis chosen, it is important to recognize the limitations associated with conducting an operational traffic analysis, on such a large network, spanning a long range planning period, in this case in excess of thirty years.

These limitations and assumptions, which can each dramatically impact the results of the analysis include:

<u>Growth Rates on the Main Corridors</u>

The growth rate on the main roadways is based on the assumption that through traffic in this area will continue to grow; however, with additional ridership on both the Metro and future bus service expansion, such as the proposed Bus Rapid Transit service on MD 355, some models have shown a decrease in area through trips. While there is substantial regional planned development in this area, it is possible that background traffic will not increase in this area to the degree reflected in the assumed growth rates.

Trip Generation Characteristics

Trip generation rates are assumed to be constant. It is possible that standard ITE trip generation rates as applied in these studies could change in the future or that the trip generation characteristics of this area will not be reflected by the ITE rates, which are based on a wide range of study locations. Additionally, no separate reductions were taken from the trip generation calculations to account for internal trips within individual developments, or within the sector plan area. All trips remaining after the NADMS reduction were assumed to end or begin outside the study area, which may overestimate the trips on the main roadways.

Development Build-Out

The development quantities and trip generation used in this area assume full build out would occur in a relatively short time frame given the volume of development contemplated. Estimates of market absorption rate as performed for Montgomery County TDM planning efforts indicate that the sector plan area is unlikely to reach the plan cap by 2042. Given market demands, it is possible that 100% build-out would not be achieved in the plan lifetime.

Conclusion

The results of this traffic analysis should therefore be viewed as one planning tool for the review of traffic conditions within the White Flint Sector Plan roadway network as it develops in the future. The conditions reviewed represent a worst case analysis of the potential traffic conditions, developed based on traditional Local Area Transportation Review procedures.

Based on all of the studies conducted, it can be concluded that the roadway network within the White Flint Sector Plan can accommodate the full build-out, based on the Policy Area standards established by the County Council. Ongoing monitoring programs of the highway network and TDM programs will each be critical elements of the long term success of the White Flint Sector Plan. Future traffic and highway conditions can adapt to the traffic demands through a series of physical mitigation improvements, changes in the actual TDM characteristics both inside and outside the Planning Area, and possible changes in the actual development configuration and density of White Flint as it evolves in the future.

1.0 Introduction

1.1 HISTORY

Stantec (formerly Greenhorne & O'Mara) has been retained by the Montgomery County Department of Transportation (MCDOT) to provide Traffic Impact Analysis services for the White Flint Transportation Project located in Montgomery County, Maryland. The purpose of this study is to determine the traffic impact of the development plan outlined in the White Flint Sector plan, approved April 2010 by the Montgomery County Council. The Maryland State Highway Administration (MD SHA) requested this study from MCDOT. The study will examine the existing conditions in the sector plan study area and the M-NCPPC projections, and then it will perform a block-by-block trip generation and assignment analysis to build a bottom-up look at the future traffic in the area. The study intersections have been evaluated using Critical Lane Volume (CLV) as well as Synchro (HCM) analyses. This study identifies intersections that would exceed the policy area limits. A previous draft of this study was submitted to Montgomery County and MD SHA for comment. This study incorporates changes as per those comments, as well as additional information provided by the White Flint Partnership and their traffic consultants.

1.2 SCOPE

The White Flint sector plan updates the Sub-Area master plan for the White Flint Mall area (**Figure 1**). It includes an increase in allowable density for the majority of the sector plan area, which could lead to a significant increase in area traffic as the properties are redeveloped. The sector plan outlines several roadway network improvements, as well as ambitious goals for increasing Non-Auto Driver Mode Share (NADMS).

This study analyzes three scenarios which are as follows:

- Existing Conditions
- 2022 Intermediate Development
- 2042 Full Build out

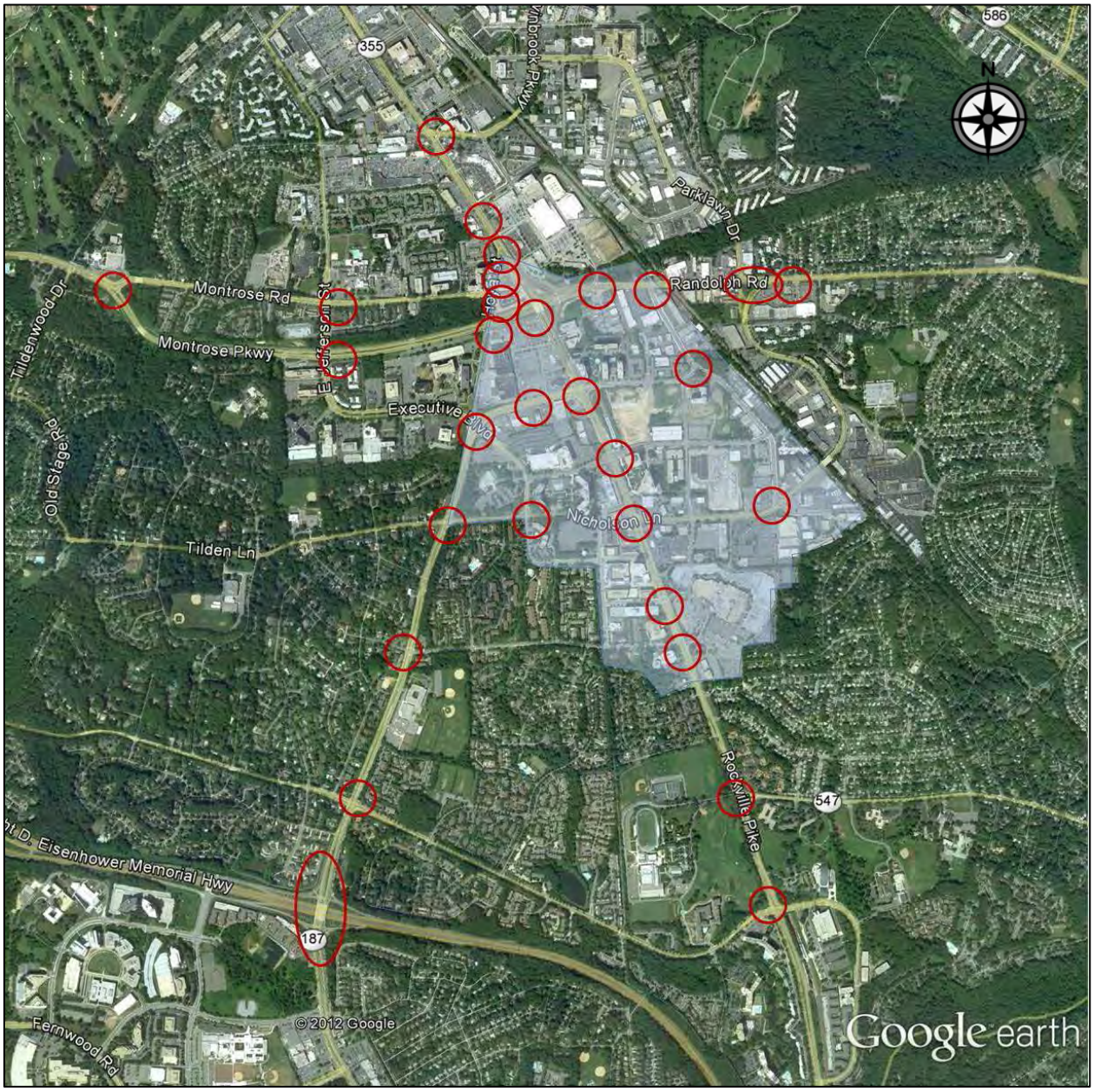

Figure 1: Vicinity Map

The following intersections have been analyzed in this study:

1. MD 355/Twinbrook Parkway
2. MD 355/Bou Avenue
3. MD 355/Hubbard Shopping Center
4. MD 355/Hoya Street "Onramp"
5. MD 355/Montrose Parkway Ramps
6. MD 355/MD 187
7. MD 355/Marinelli Road
8. MD 355/Nicholson Lane
9. MD 355/Security Blvd
10. MD 355/Edson Lane
11. MD 355/MD 547
12. MD 355/Tuckerman Lane
13. Montrose Parkway/Montrose Road
14. Montrose Road/E. Jefferson Street
15. MD 355/Hoya "OffRamp"
16. Montrose Road/Hoya Street
17. Montrose Parkway/E. Jefferson Street
18. Montrose Parkway/Hoya Street
19. Montrose Parkway/Chapman Avenue/Maple Avenue
20. Randolph Road/Nebel Street
21. Randolph Road/Parklawn Drive
22. Randolph Road/Lauderdale Drive
23. MD 187/Hoya Street/ Exeuctive Blvd
24. MD 187/MidPike Entrance/Executive Realigned
25. Old Georgetown Road/Nebel Street
26. MD 187/Nicholson Lane/Tilden Lane
27. Nicholson Lane/Executive Blvd
28. Nicholson Lane/Nebel Street
29. MD 187/Edson Lane
30. MD 187/Tuckerman Lane
31. MD 187/I-270 Northbound Ramps
32. MD 187/I-279 Southbound Ramps
33. Hoya Street/MidPike E/W Access
34. MD 355/MidPike E/W Access
35. MD 187/Main Street/Market Street
36. MD 355/Main Street/Market Street
37. Marinelli Street/Citadel Avenue
38. Nicholson Lane/Citadel Avenue
39. MD 355/Executive Blvd
40. Montrose Parkway/Parklawn Drive

2.0 Existing Conditions

2.1 EXISTING TRAFFIC VOLUMES

Traffic counts were conducted between September 13, 2011 and September 29, 2011 from 6:45 AM to 9:45 AM and from 4:00 PM to 7:00 PM at the following intersections:

- MD 355 @ Hubbard Shopping Center Entrance
- MD 355 @ Strathmore Avenue (MD 547)
- MD 355 @ Tuckerman Lane
- MD 187 @ Edson Lane/Poindexter Lane
- MD 187 @ Tuckerman Lane
- MD 355 @ Hoya Street
- MD 355 @ Twinbrook Parkway/Rollins Avenue

The existing count data for the remaining study intersections were provided by Maryland State Highway Administration (MD SHA). MD SHA performed a traffic analysis of the Montrose Parkway Phase 1 and Phase 2 traffic impacts using Synchro software. These Synchro files were provided to Stantec to use as a base for this study. Traffic counts were also conducted at all the study intersections on Saturdays between September 10, 2011 and October 22, 2011 between 10:00 AM and 2:00 PM.

Figure 2: Existing Road Network

The existing road network is shown in **Figure 2**, the turning movement counts are shown in **Figure 3,** and detailed lane use and traffic control is shown in **Figure 4**. The raw traffic count data is included in **Appendix A**.

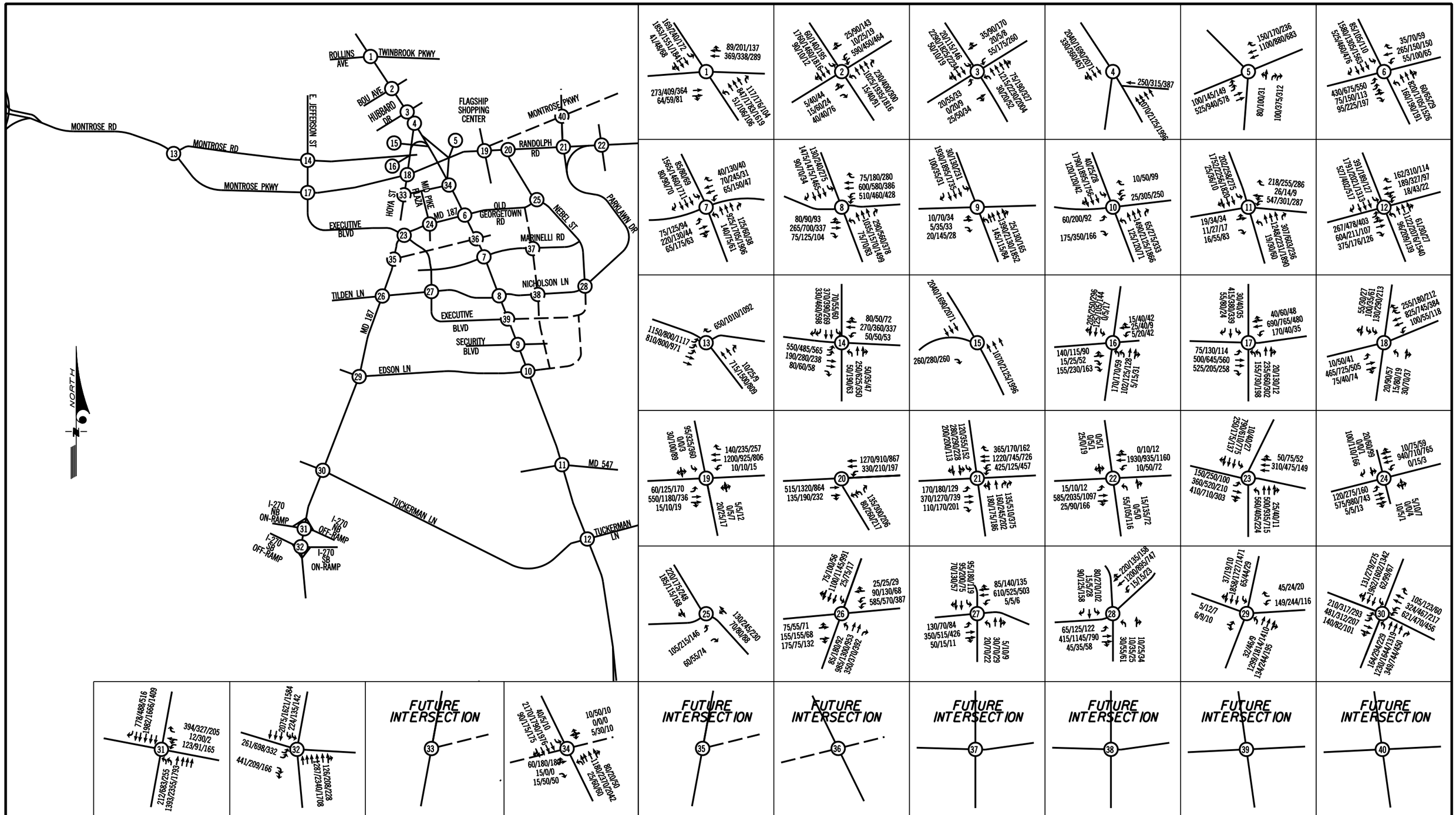

LEGEND: AM/PM/SATURDAY

Stantec

6110 Frost Place
Laurel, MD 20707
301-982-2800
www.stantec.com

WHITE FLINT SECTOR PLAN - TRAFFIC IMPACT STUDY

EXISTING TRAFFIC VOLUMES

MONTGOMERY COUNTY, MARYLAND

FIGURE 3

11/16/12

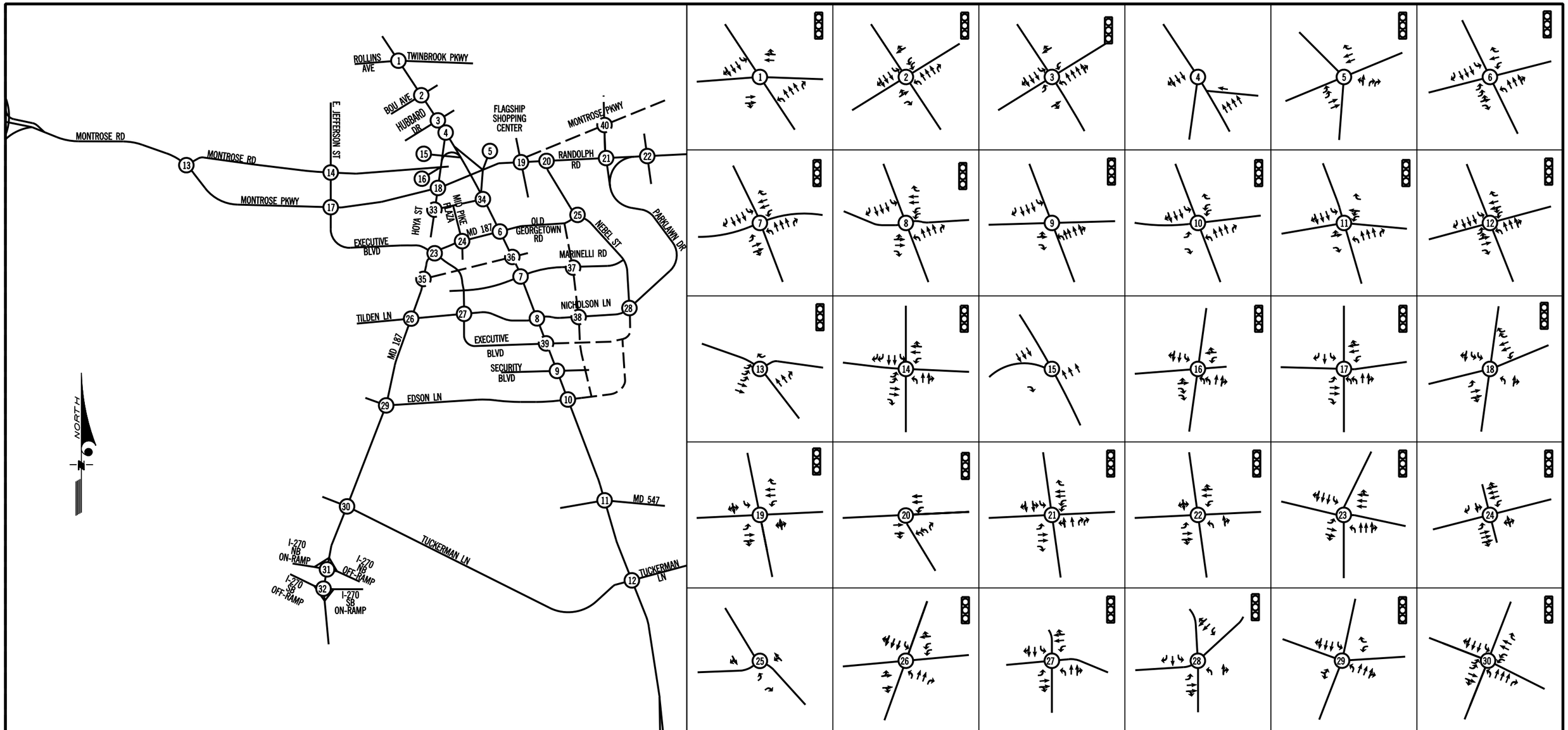

LEGEND: AM/PM/SATURDAY

SIGNALIZED INTERSECTION → SINGLE TRAVEL LANE

Stantec

6110 Frost Place
Laurel, MD 20707
301-982-2800
www.stantec.com

WHITE FLINT SECTOR PLAN - TRAFFIC IMPACT STUDY

EXISTING ROAD NETWORK AND LANE USE

MONTGOMERY COUNTY, MARYLAND

FIGURE 4

11/16/12

2.2 EXISTING TRAFFIC OPERATIONS

The existing weekday and Saturday peak hour volumes were analyzed using CLV methodology with the existing lane configurations and traffic control as shown in **Figure 4**. The CLV results for existing conditions are shown in **Table 1** and the PM peak hour results are shown graphically in **Figure 5**. CLV worksheets are contained in **Appendix B** and summarized in **Table 1**.

Critical lane volume is the standard planning level intersection evaluation method for Montgomery County, as well as MD SHA. It provides a numerical measure of intersection congestion based on the traffic volumes, lane configuration, and signal phasing. In the *Local Area Transportation Review and Policy Area Review Guidelines*, M-NCPPC divides the county into policy areas, and each of these policy areas is assigned a congestion standard for LATR analysis. These congestion standards are based on CLV analyses and provide a threshold for acceptable CLV between 1,350 and 1,800 based on availability of transit and other factors. The study area for this report includes intersections across three policy areas. These policy areas are Grosvenor, North Bethesda and White Flint. The Grosvenor and White Flint policy areas have a CLV threshold of 1,800, and the North Bethesda Policy Area has a threshold of 1,550. The policy area and threshold for each intersection are noted in **Table 1**.

Under existing conditions, the intersection MD 187/Tuckerman Lane intersection exceeds the area threshold. All other intersections operate at CLV's below the area threshold.

Table 1: Existing CLV Level of Service

	Intersection			
	White Flint Policy Area 1800 CLV	**AM**	**PM**	**Sat**
5	Montrose Parkway @ MD 355 Ramps	723	752	616
6	Old Georgetown Rd @ MD 355	1,182	1,415	1,283
7	MD 355 @ Marinelli Rd	935	1,036	884
8	MD 355 @ Nicholson Ln	1,110	1,516	1,315
9	MD 355 @ Security Blvd	874	921	903
10	MD 355@ Edson Lane	902	1279	981
16	Hoya Street @ Montrose Road	440	442	392
18	Hoya Street @ Montrose Pkwy	622	784	609
19	Montrose Parkway @ Chapman Ave/Maple Ave	791	921	885
20	Randolph Road @ Nebel St	723	1,166	908
23	MD 187 @ Executive Blvd./Hoya St	1,355	1,405	864
24	MD 187 @ Mid Pike/New Executive *(FUTURE)*	587	690	643
25	MD 187 @ Nebel St	580	585	650
26	MD 187 @ Nicholson Ln/Tilden Ln	1,117	1,260	901
27	Nicholson Ln @ Executive Blvd.	612	667	561
28	Nicholson Ln @ Nebel St	938	1001	763

Table 1: Existing CLV Level of Service

	Intersection			
	White Flint Policy Area 1800 CLV	**AM**	**PM**	**Sat**
33	Hoya St @ Mid Pike East-West *(FUTURE)*	N/A	N/A	N/A
34	MD 355 @ Mid Pike East-West	783	982	905
35	Old Georgetown @ Main St/Market St *(FUTURE)*	N/A	N/A	N/A
36	MD 355 @ Main Street/Market St *(FUTURE)*	N/A	N/A	N/A
37	Marinelli Rd @ Citadel Ave [1]	N/A	N/A	N/A
38	Nicholson Ln @ Citadel Ave [1]	N/A	N/A	N/A
39	MD 355 @ Executive Extended [1]	N/A	N/A	N/A
	Grosvenor Policy Area 1800 CLV			
11	MD 355 @ MD 547	1,072	1,328	1,229
12	MD 355 @ Tuckerman Ln	1,268	1,700	1,230
	North Bethesda Policy Area 1550 CLV			
1	MD 355 @ Twinbrook Parkway	995	1,186	1,048
2	MD 355 @ Bou Avenue	1,079	1,230	1,221
3	MD 355 @ Hubbard Shopping Center	976	1,086	1,189
13	Montrose Road @ Montrose Parkway	839	1,115	876
14	E. Jefferson Street @ Montrose Road	762	913	826
17	E. Jefferson Street @ Montrose Parkway	970	1,385	852
21	Randolph Road @ Parklawn Ave	1,251	1,209	902
22	Randolph Road @ Lauderdale Drive	1,118	1,321	878
29	Old Georgetown Rd @ Poindexter Ln/Edson Lane	894	1,071	757
30	Old Georgetown Rd @ Tuckerman Ln	1,640	1,481	1,264
31	Old Georgetown @ I 270 NB Ramps	1,299	1,225	874
32	Old Georgetown @ I 270 SB Ramps	1,002	1,137	785
40	Montrose Parkway @ Parklawn Drive *(FUTURE)*	N/A	N/A	N/A

*1: Existing turning movement data was not collected for these intersections.

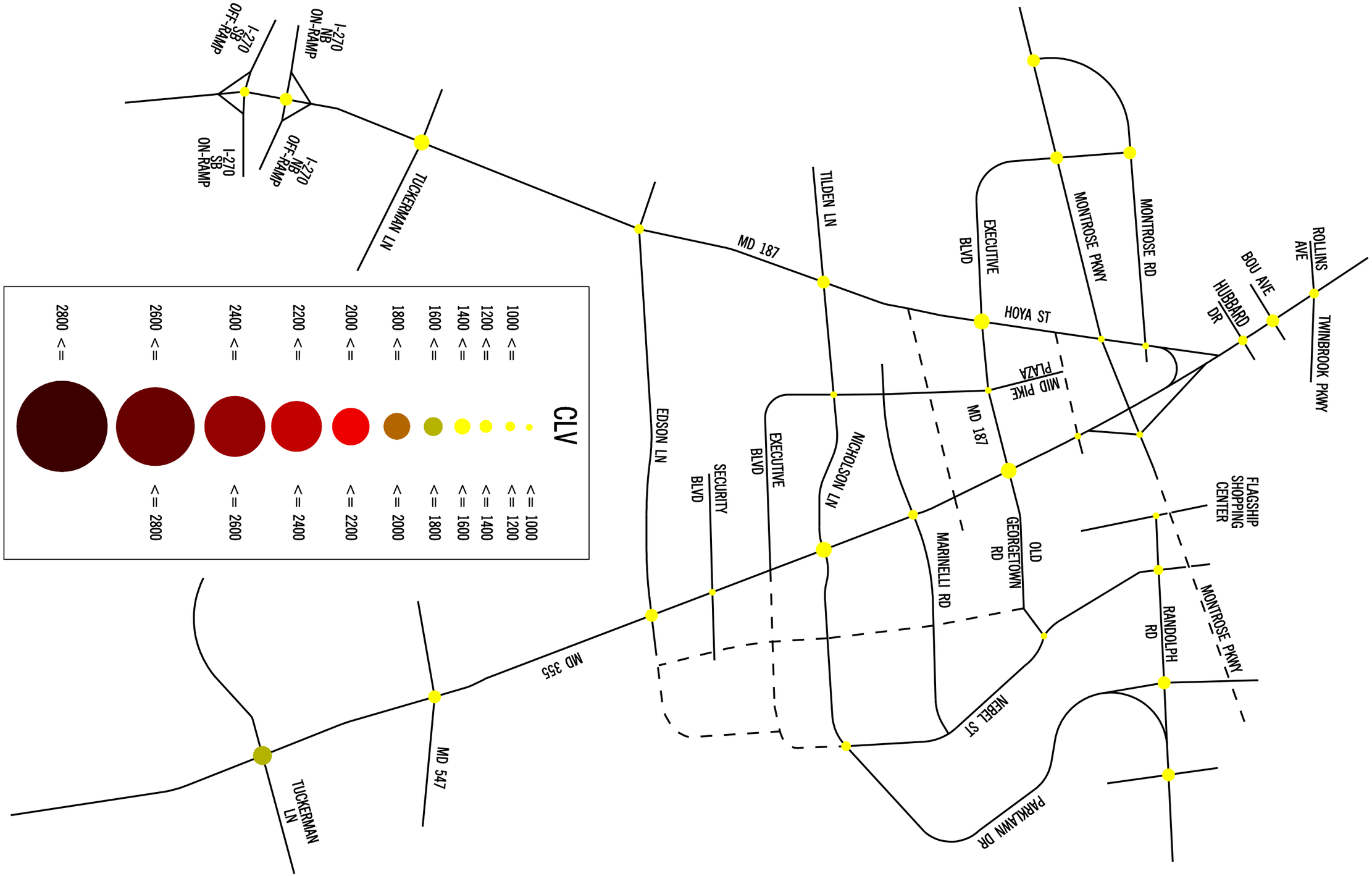

No.	REVISION	DATE	BY

Stantec

6110 Frost Place
Laurel, MD 20707
301-982-2800
www.stantec.com

WHITE FLINT SECTOR PLAN - TRAFFIC IMPACT STUDY

EXISTING PM LOS RESULTS

MONTGOMERY COUNTY, MARYLAND

FIGURE 5

3.0 Background Traffic Conditions

3.1 PLANNED ROAD IMPROVEMENTS

The sector plan calls for several changes to the existing roadway network. These changes would provide for a more efficient grid network, with short block lengths for pedestrians and more choices for vehicular movements. It would also realign several roads to result in more regular block shapes which are more conducive to redevelopment. The planned roadway layout is shown on **Figure 6** and the major changes are described below:

- **Montrose Parkway East** – this is a project currently in the county CIP that is independent of the White Flint sector plan, but will have a strong impact on the area. Montrose Parkway, a four lane facility, will be extended from the current intersection with Maple Avenue east to Veers Mill Road. Nebel Street will not intersect with Montrose Parkway. A single point urban interchange will be provided at Parklawn Drive. The existing connection between Nebel Street and Maple Avenue/Chapman Avenue on Randolph Road will be removed. More information on this improvement is provided in **Appendix A**.

- **MD 187/Executive Boulevard Realignment** – the intersection of MD 187 at Executive Boulevard is currently aligned with MD 187 headed southwest to northeast and Executive Boulevard headed northwest to southeast. Both roadways will be realigned to produce two orthogonal intersections. MD 187 will be realigned to travel north-south until the current intersection location, where it will turn 90 degrees and travel east-west until the intersection with MD 355. In the sector plan, this east-west section is planned be reduced from a six lane cross-section to four-lanes. Hoya Street will be constructed as the southbound leg of this intersection. Executive Boulevard will be realigned to travel directly north-south and will intersect the east-west portion of MD 187 between the original intersection location and MD 355, across from the Mid Pike Plaza access road.

- **Construction of Main Street/Market Street** – a new 2 lane roadway will be constructed between MD 187 and MD 355. It will run parallel to the newly realigned east-west section of MD 187 to the south. During the early phases of this project, the final section connecting to MD 355 may not be completed, as it is dependent on developer dedication.

- **Executive Boulevard** – the section of Executive Boulevard that connects to MD 355 on the western side was recently constructed by a developer. In the future, Executive Boulevard will continue to the east across MD 355 and intersect with Nebel Street (Extended) along the northern border of the White Flint Mall property.

- **Nebel Extended** – Nebel Street will be extended as a two lane facility to the south and turn toward the west to intersect with MD 355 at Edson Lane.

- **Various Local Level Streets** – there are several local level streets that will be constructed by developers as each property is redeveloped. Some of the roadways that have known alignments are

shown on **Figure 6**. More information from the sector plan on the potential road network is contained in **Appendix A**.

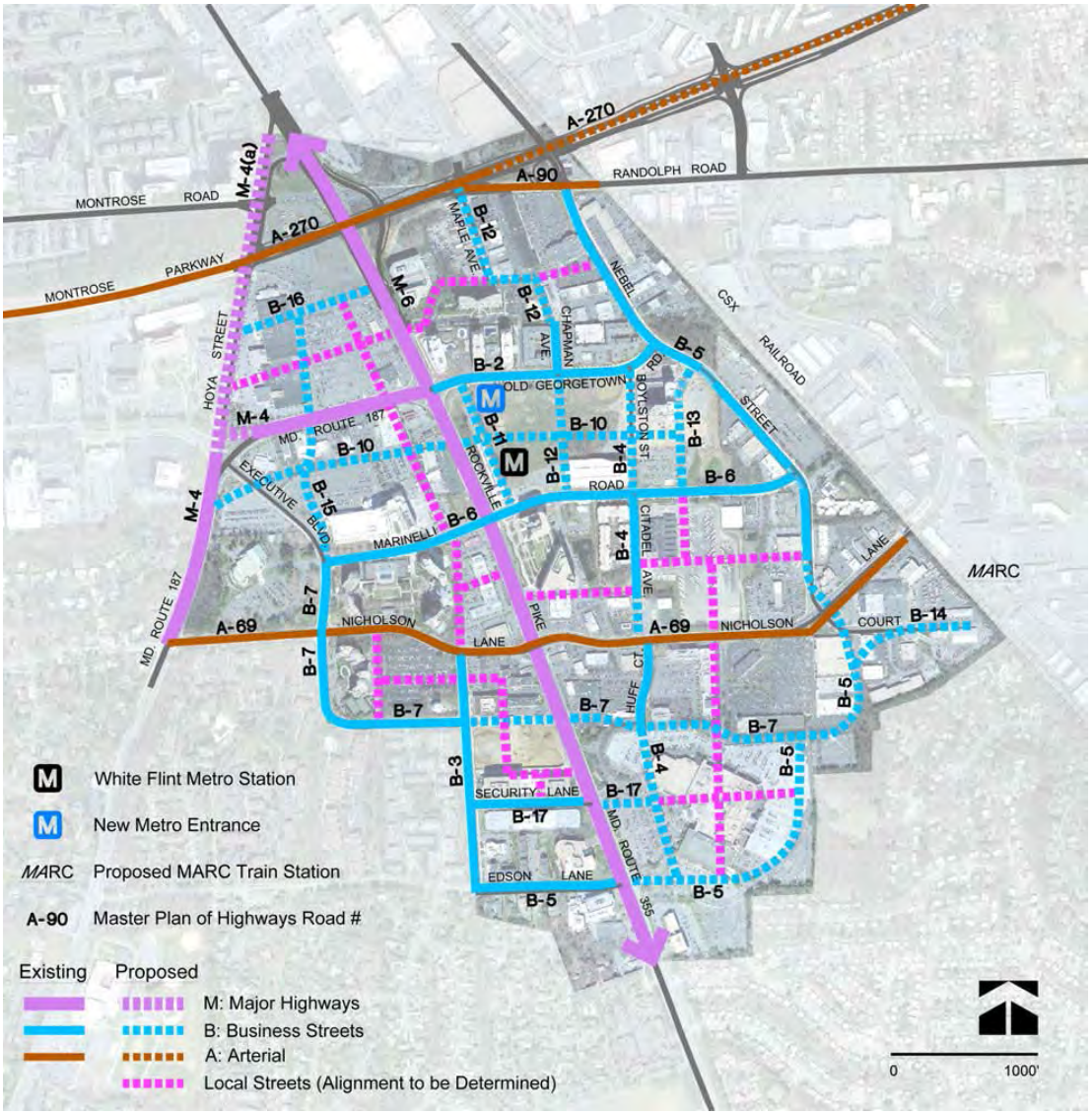

Figure 6: Planned Road Network

3.2 BACKGROUND THROUGH TRIPS AND GROWTH

In order to analyze the future condition with the planned network improvements, an origin-destination (O-D) study was conducted by STV, Inc. for the White Flint Partnership. STV used the O-D data to determine the proportions of traffic entering each network entry point, and the destination of that traffic either to a location inside the white flint area, or to another network entry/exit point. The traffic that was found to travel directly from a network entry point through the white flint area and exit at another point was considered to be the base regional through traffic. This O-D percentage information was combined with MD SHA volume data to produce base regional through traffic volumes. These volumes were

provided to Stantec by STV, Inc. to serve as a collaborative base point for future traffic analysis (see **Appendix C**).

Table 2: AADT Growth on MD 355

Year	AADT	Change in Volume Increase /(Decrease)
2004	57,750	-
2005	56,625	(1,125)
2006	53,590	(3,035)
2007	53,591	1
2008	51,982	(1,609)
2009	52,828	838
2010	53,141	321

In order to account for traffic increases from outside of the study area, MD SHA requested that a growth rate be applied to the north-south through movements on MD 355 and MD 187, and the east-west through movements on Montrose Parkway/Montrose Road. MD SHA provided average annual daily traffic (AADT) volumes on MD 355 one tenth of a mile north of Montrose Parkway. As shown in **Table 2,** the AADT volumes indicate that MD 355 in this area has shown an overall decrease in traffic between the years 2004 and 2010. There has been a modest increase over the two most recent data points, resulting in an average growth of one (1) percent per year.

There are several large projects that are currently approved in the areas surrounding White Flint. In order to fully account for the future growth due to these nearby projects, as well as regional growth, a one (1) percent growth rate, compounded to the study year, was added to the north-south through volumes on MD 355, 0.5 percent growth was applied to Montrose Road/Montrose Parkway, and 0.25 percent growth was applied to MD 187. The future road network was analyzed under an intermediate 2022 scenario, as well as full build out. The full build-out scenario was assumed to take place in 2042 for the purposes of growth calculations. The growth was applied to STV's O-D data for both the 2022 and 2042 scenarios, and the resulting 2022 and 2042 regional through trips with growth are shown in **Figure 7** and **Figure 8**, respectively. Additional information from STV is contained in **Appendix C**.

3.3 PIPELINE DEVELOPMENTS

Several developments were approved prior to the sector plan (see **Table 3**). The sector plan, as approved, requires that the overall sector plan area also reduce the trips to achieve a non-auto driver mode split (NADMS) of 50 percent for commercial development and 51 percent for residential under full build-out. These NADMS requirements apply to the entire sector plan area, including existing development that will not redevelop and the developments which have already achieved approval. Therefore, at each stage of development analyzed, the pipeline developments are assumed to have the same NADMS as the rest of the sector plan development, and are included in the overall sector plan trip generation.

Table 3: Pipeline Developments

Property/Use	Quantity	Unit
North Bethesda Center (LCOR)		
Multi-Family Residential	1,350	DU
Office	1,140,0000	SF
Commercial	Retail	SF
North Bethesda Market		
Dwelling Units	440	DU
Commercial	223,000	SF
White Flint View		
Dwelling Units	183	DU
Commercial	29,500	SF
Metro Pike Holladay		
Dwelling Units	247	DU
Commercial	201,822	SF

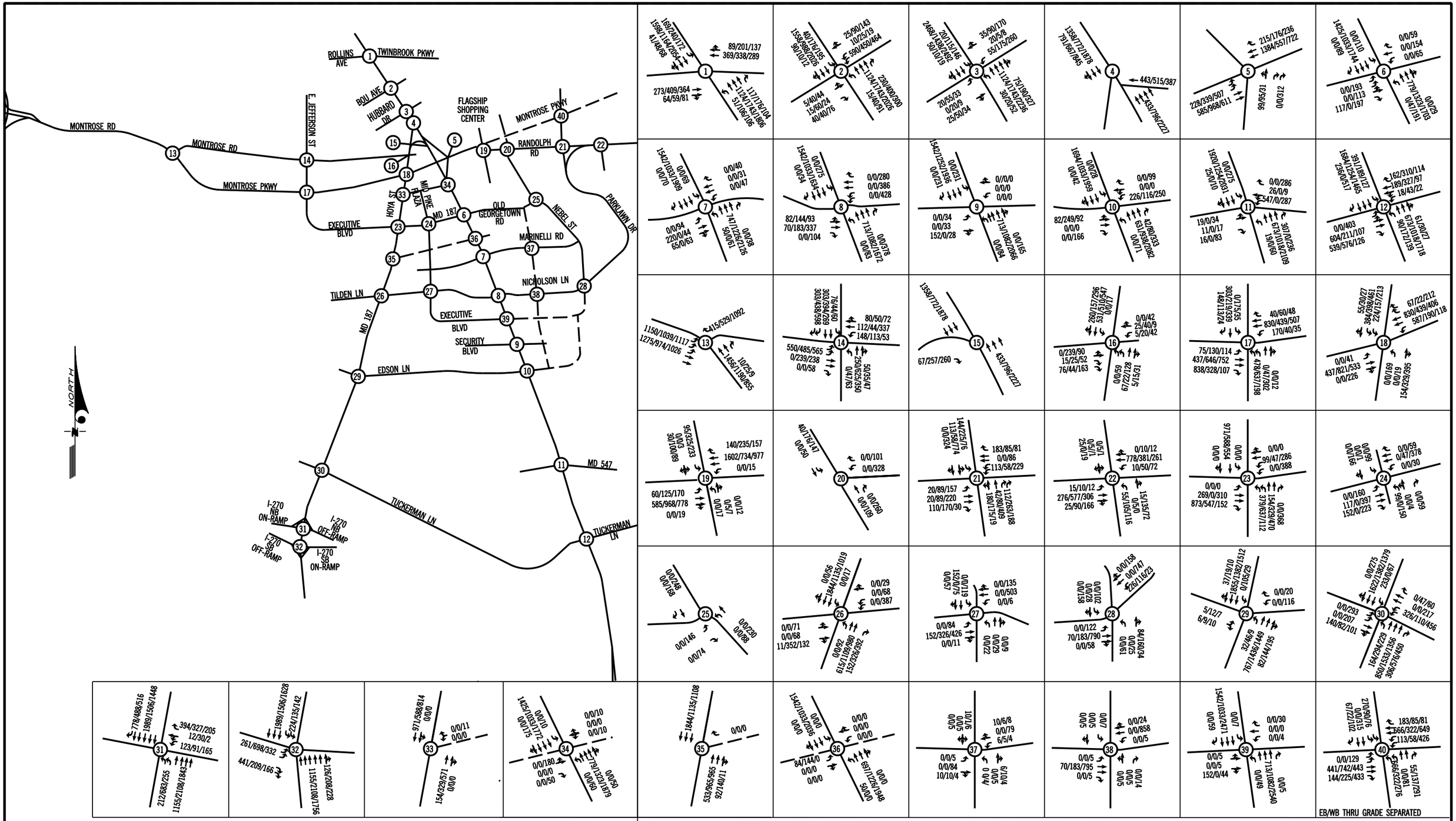

LEGEND: AM/PM/SATURDAY

Stantec

6110 Frost Place
Laurel, MD 20707
301-982-2800
www.stantec.com

WHITE FLINT SECTOR PLAN - TRAFFIC IMPACT STUDY

2022 REGIONAL THROUGH TRIPS

MONTGOMERY COUNTY, MARYLAND

FIGURE 7

11/16/12

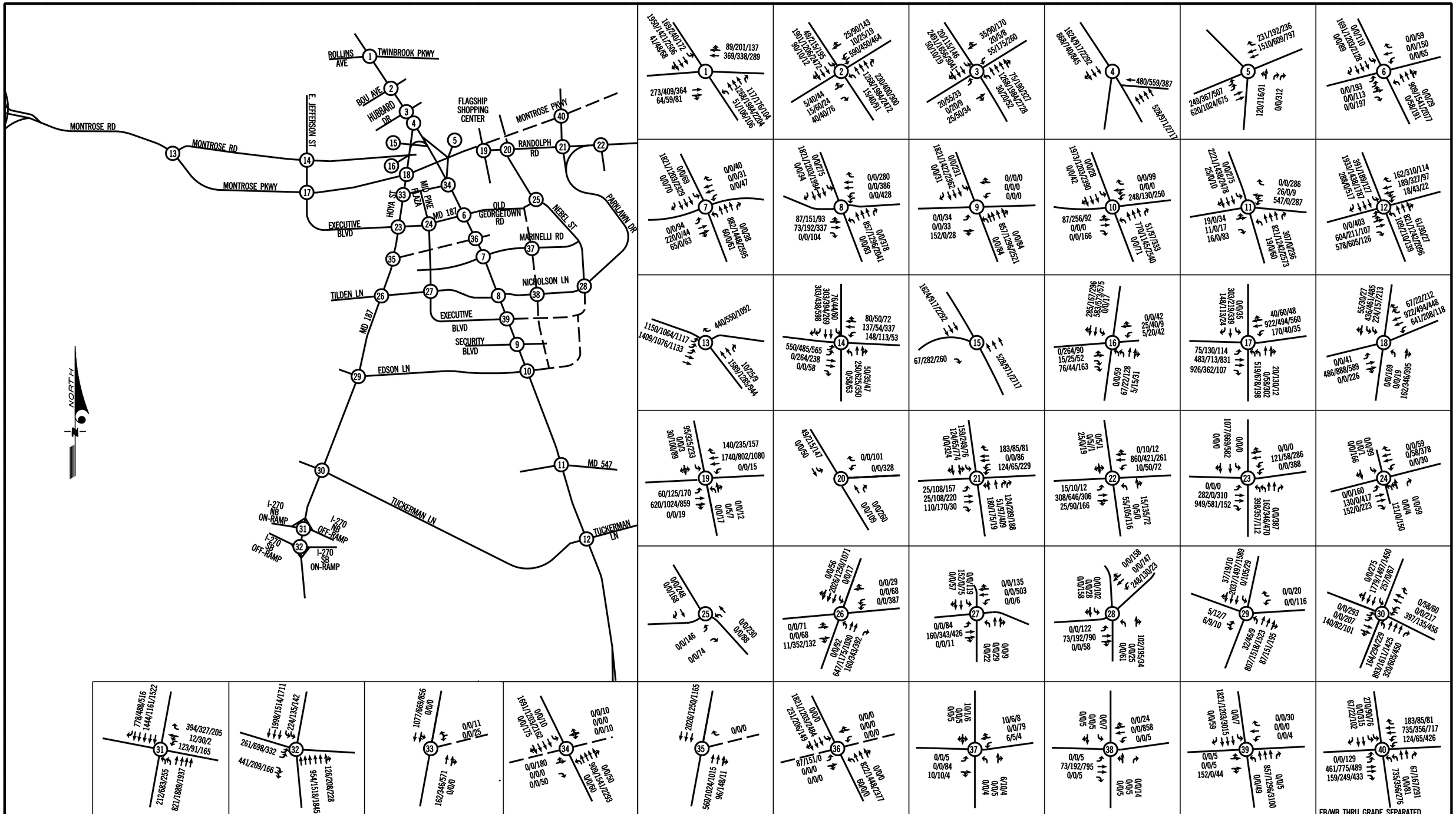

LEGEND: AM/PM/SATURDAY

Stantec
6110 Frost Place
Laurel, MD 20707
301-982-2800
www.stantec.com

WHITE FLINT SECTOR PLAN - TRAFFIC IMPACT STUDY

2042 REGIONAL THROUGH TRIPS

MONTGOMERY COUNTY, MARYLAND

FIGURE 8

11/16/12

4.0 2022 Future Conditions

4.1 2022 TRIP GENERATION

The sector plan area is divided into 20 blocks, as shown on the map in **Figure 9**. Future development, by use, was examined for each block. The future development is based on the development quantities planned by the land owners and development community as per information provided by the White Flint Partnership/STV Inc. These quantities include the pipeline developments already approved, the developments that are currently underway or have submitted sketch plans, and future development that is anticipated by the property owners to occur under the sector plan. These desired quantities were then adjusted to reflect the development caps imposed by the White Flint Sector Plan and were approved by MNCPPC. This collaborative process ensured that there is consensus on the assumed future trip generation in the sector plan area. For the 2022 analysis, the sector plan area is assumed to approach the end of Stage 1.

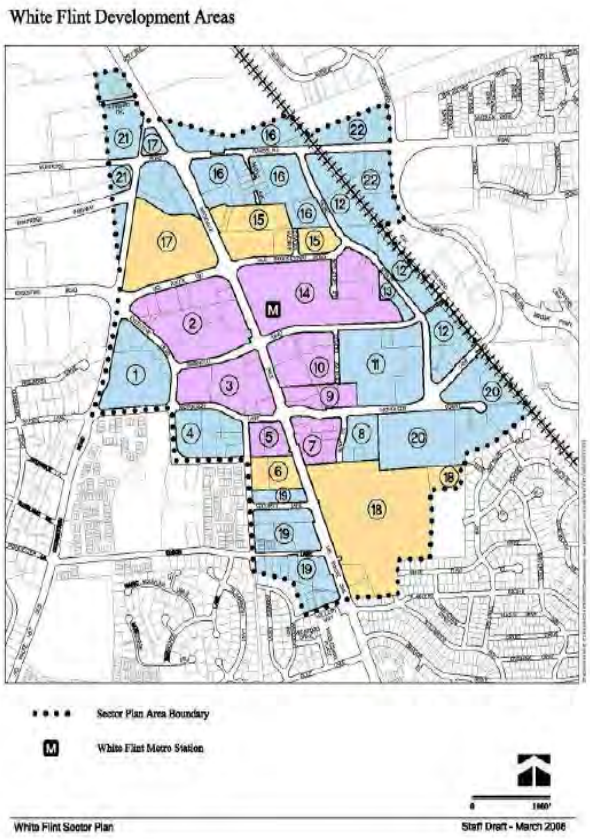

Figure 9: Block Number Map

The sector plan breaks the total development into three stages. Each stage increases the development available for approval allocation. Moving from each stage is triggered by achieving the non-auto driver mode split (NADMS) goals set by the sector plan.

The stages are as follows:

- **Stage 1** – Releases 2,000 dwelling units and 2.0 Million SF of non-residential development for approval. NADMS goal for the overall sector plan area (required to move to Stage 2) is 34%.
- **Stage 2** – Releases an additional 2,000 dwelling units and 2.0 Million SF of non-residential development for approval. NADMS goal for the overall sector plan area (required to move to Stage 3) is 42%.
- **Stage 3** – Releases final 3,800 dwelling units and 1.69 million SF of non-residential development. NADMS goal for the overall sector plan area is 50% for non-residential development and 51% for residential development.

These substantial levels of development would be built-out over many years. For the purposes of this analysis, Stantec has attempted to estimate a reasonable amount of development that could be approved and constructed by 2022. This quantity of development approaches the end of Stage 1, as outlined in the

sector plan, and includes 970,878 SF of non-residential development and 781 residential units in the pipeline development, as well as 1,171,641 SF of non-residential development and 2,671 residential units in new approvals.

The developments included in this 10-year build out were based on the current sketch plans submitted to M-NCPPC. This includes redevelopment of the White Flint Mall, Mid Pike Plaza, North Bethesda Market II and North Bethesda Gateway. For the pipeline developments, this analysis assumes partial build out of the North Bethesda Center (LCOR) development and full build out of the Metro Pike, White Flint View and North Bethesda Market I developments.

The trips generated by this proposed development were calculated using ITE trip generation rates. Montgomery County has county-specific trip generation rates that are typically used for LATR traffic impact studies; however, these rates do not include Saturday peak hours. The ITE Trip Generation Manual provides Saturday peak hour trip generation rates and equations. Therefore, in order to maintain a consistent source of trip generation information across the peak hour studied, ITE rates were used for all peak hours. The rates and equations used in this study are shown in **Table 4**.

The rates and equations were applied to the development quantities approved by MNCPPC to produce the 2022 future trip generation for the entire sector plan area as shown in **Table 5**. The full-build out NADMS of 34 percent for commercial and residential development was then applied to all peak hour trips. The remaining auto driver trips to be assigned to the roadway network are shown in the three right-hand columns of **Table 5**.

Table 4: Trip Generation Rates and Equations

Use	ITE Code	Unit (X)	Peak Hour	In/Out Split	Rate/Equation
Office	710	SF	AM	88/12	ln(Trips) = 0.8*ln(X)+1.55
			PM	17/83	Trips = 1.12*(X/1000)+78.81
			SAT	54/46	Trips = 0.41*(X/1000)
Retail	820, 814, 931, 932	SF	AM	61/39	Trips = (1/3)*(EXP(0.59*ln(X)+2.32))+(1/3)*(EXP(0.59*ln(X)+2.32))+(1/6)*(11.52*X)+(1/6)*(0.81*X)
			PM	49/51	Trips = (1/3)*(EXP(0.67*ln(X)+3.37))+(1/3)*(2.4*X+21.48)+(1/6)*(7.49*X)+(1/6)*(11.15*X)
			SAT	52/48	Trips = (1/3)*(EXP(0.65*ln(X)+3.76))+(1/3)*(42.04*0.1*X)+(1/6)*(10.82*X)+(1/6)*(14.07*X)
Industrial	130	SF	AM	82/18	ln(Trips) = 0.77*ln(X)+1.09
			PM	21/79	Trips = 0.77*(X/1000)+42.11
			SAT	32/68	Trips = 0.35*X/1000
Residential	232	DU	AM	19/81	Trips = 0.29*X+28.86
			PM	62/38	Trips = 0.34*X+15.47
			SAT	43/57	Trips = 0.30*X+28.85
Hotel	312	Room	AM	59/41	Trips = .58*X
			PM	60/40	Trips = 0.62*X
			SAT	56/44	Trips = 0.69*X+4.32

Table 5: 2022 Block by Block Trip Generation

Block	Land Use	MNCPPC Approved Development - 2022 Future	Future Trips			Future Trips with NADMS		
			AM Trips	PM Trips	SAT Trips	AM Trips	PM Trips	SAT Trips
1	County Rec Center	44,000	55	76	185	36	50	122
2	Office	23,280	58	105	13	39	69	8
	Retail	116,360	351	696	961	232	460	634
	Hotel/Conference Center	268,000	155	166	189	103	110	125
3	Office	85,963	166	175	36	110	116	24

Table 5: 2022 Block by Block Trip Generation

Block	Land Use	MNCPPC Approved Development - 2022 Future	Future Trips			Future Trips with NADMS		
			AM Trips	PM Trips	SAT Trips	AM Trips	PM Trips	SAT Trips
	Retail	115,886	350	694	958	231	458	632
	Residential	1,074	340	381	351	225	251	260
4	Residential	186	83	79	85	55	52	63
5	Office	291,500	441	405	98	291	267	65
	Retail	78,474	250	494	680	165	326	448
	Residential	339	127	131	131	84	86	97
6	Residential	397	144	150	148	95	99	109
	Industrial	223,000	191	214	78	126	141	52
7	Retail	80,586	256	505	695	169	334	459
8	Office	124,789	224	219	49	148	144	33
	Retail	41,400	146	286	391	96	189	258
	Residential	441	157	165	161	103	109	119
9	Office	21,289	54	103	12	36	68	8
	Retail	50,112	171	336	460	113	222	304
	Residential	183	82	78	84	54	51	62
10	Office	744,452	935	913	209	617	602	138
	Residential	202	87	84	89	58	56	66
11	Office	41,410	93	125	20	61	83	13
	Retail	30,720	114	223	303	75	147	200
	Specialty Retail	23,227	34	60	98	22	40	64
12	Retail	146,773	430	855	1,181	284	564	780
	Industrial	97,920	101	118	34	67	78	23
	Specialty Retail	58,718	68	87	247	45	58	163
13	Office	11,242	33	91	7	22	60	5
	Industrial	25,662	36	62	9	24	41	6
14	Office	795,378	985	970	221	650	640	146
	Retail	140,791	415	824	1,138	274	544	751
	Residential	653	218	237	225	144	157	166
15	Office	61,450	127	148	28	84	97	18
	Residential	946	303	337	313	200	222	231
16	Office	124,429	223	218	49	147	144	32
	Retail	164,467	476	946	1,307	314	624	863
	Industrial	129,283	126	142	45	83	93	30
17	Office	475,150	653	611	146	431	403	96
	Retail	281,205	767	1,530	2,120	506	1,010	1,399
	Residential	898	289	321	298	191	212	221

Table 5: 2022 Block by Block Trip Generation

Block	Land Use	MNCPPC Approved Development - 2022 Future	Future Trips			Future Trips with NADMS		
			AM Trips	PM Trips	SAT Trips	AM Trips	PM Trips	SAT Trips
	Hotel	300,000	174	186	211	115	123	139
18	Office	570,195	755	717	169	498	474	111
	Retail	983,617	2,417	4,831	6,721	1,595	3,188	4,436
	Residential	469	165	175	170	109	115	125
19	Office	900,052	1,088	1,087	244	718	717	161
	Retail	32,568	120	234	319	79	155	210
	Residential	57	45	35	46	30	23	34
20	Office	19,800	51	101	11	34	67	7
	Retail	277,331	757	1,511	2,093	500	997	1,382
	Industrial	222,835	191	214	78	126	141	51
Office Subtotal		4,290,379	5,887	5,987	1,312	3,886	3,951	865
Retail Subtotal		2,540,290	7,022	13,966	19,327	4,633	9,218	12,756
Hotel Subtotal		568,000	329	352	401	218	233	264
Industrial Subtotal		824,645	802	972	774	529	642	511
Total Commercial		**8,223,314**	**14,040**	**21,277**	**21,814**	**9,266**	**14,044**	**14,396**
Total Residential		**5,845**	**2,041**	**2,173**	**2,100**	**1,348**	**1,433**	**1,553**
Total Peak Hour Trips			**16,082**	**23,450**	**23,914**	**10,614**	**15,477**	**15,949**

4.2 2022 ROADWAY NETWORK

The road network for this scenario is assumed to include the following changes:

- **Montrose Parkway East** – this is a project currently in the county CIP that is independent of the White Flint sector plan, but will have a strong impact on the area. Montrose Parkway, a four lane facility, will be extended from the current intersection with Maple Avenue to the east. Nebel Street will not intersect with Montrose Parkway. A single point urban interchange will be provided at Parklawn Drive. The existing connection between Nebel Street and Maple Avenue/Chapman Avenue on Randolph Road will be removed. More information on this improvement is provided in **Appendix A**.

- **MD 187/Executive Boulevard Realignment** – The intersection of MD 187 at Executive Boulevard is currently aligned with MD 187 headed southwest to northeast and Executive Boulevard headed northwest to southeast. Both roadways will be realigned to produce two orthogonal intersections. MD 187 will be realigned to travel north-south until the current intersection location, where it will turn 90 degrees and travel east-west until the intersection with MD 355. MD 187 will

remain a six-lane section. Hoya Street will be constructed as the southbound leg of this intersection. Executive Boulevard will be realigned to travel directly north-south and will intersect the east-west portion of MD 187 between the original intersection location and MD 355, across from the Mid Pike Plaza access road. Significant traffic, which is currently assumed to travel southbound on MD 355 and make a right at MD 187, is assumed to use this new southbound connection, taking the right fork at Hoya Street from MD 355 and continuing south to MD 187.

- **Construction of Main Street/Market Street** – a new 2 lane roadway will be constructed between MD 187 and MD 355. It will run parallel to the newly realigned east-west section of MD 187 to the south. It is assumed for the purposes of this study that the intersection of Main/Market with MD 355 will be a full movement signalized intersection. However, the intersection of Main/Market with MD 187 is assumed to operate as a right-in/right-out intersection.

- **Various Local Level Streets** – Several local level streets will be constructed by developers as each property is redeveloped. More information from the sector plan on the potential road network is contained in **Appendix A**.

This scenario is not assumed to include the Nebel Street extension. However, the planned changes to the White Flint Mall access points are incorporated, including the addition of east-west through movements at Edson Lane.

4.3 2022 TRIP DISTRIBUTION AND TRAFFIC ASSIGNMENTS

The total White Flint Sector Plan area 2022 trip generation with the 34% NADMS as shown in **Table 5**, was assigned to the area roadway network as described above. The distribution for the future trips was based on the distribution as outlined by M-NCPPC in their analysis of the sector plan impact. The majority of the available transit options serve the north-south corridor; therefore, in the future with heavier transit use, the vehicular traffic would be more heavily weighted to the east and west. The distribution used for the future trips reflects this change. The assigned trips for the overall sector plan area trip generation are shown on **Figure 10**, with average distribution noted. The sector plan area trips were added to the 2022 Regional Through trips as shown on **Figure 7**, to produce the future traffic assignments for the 2022 scenario as shown on **Figure 11**.

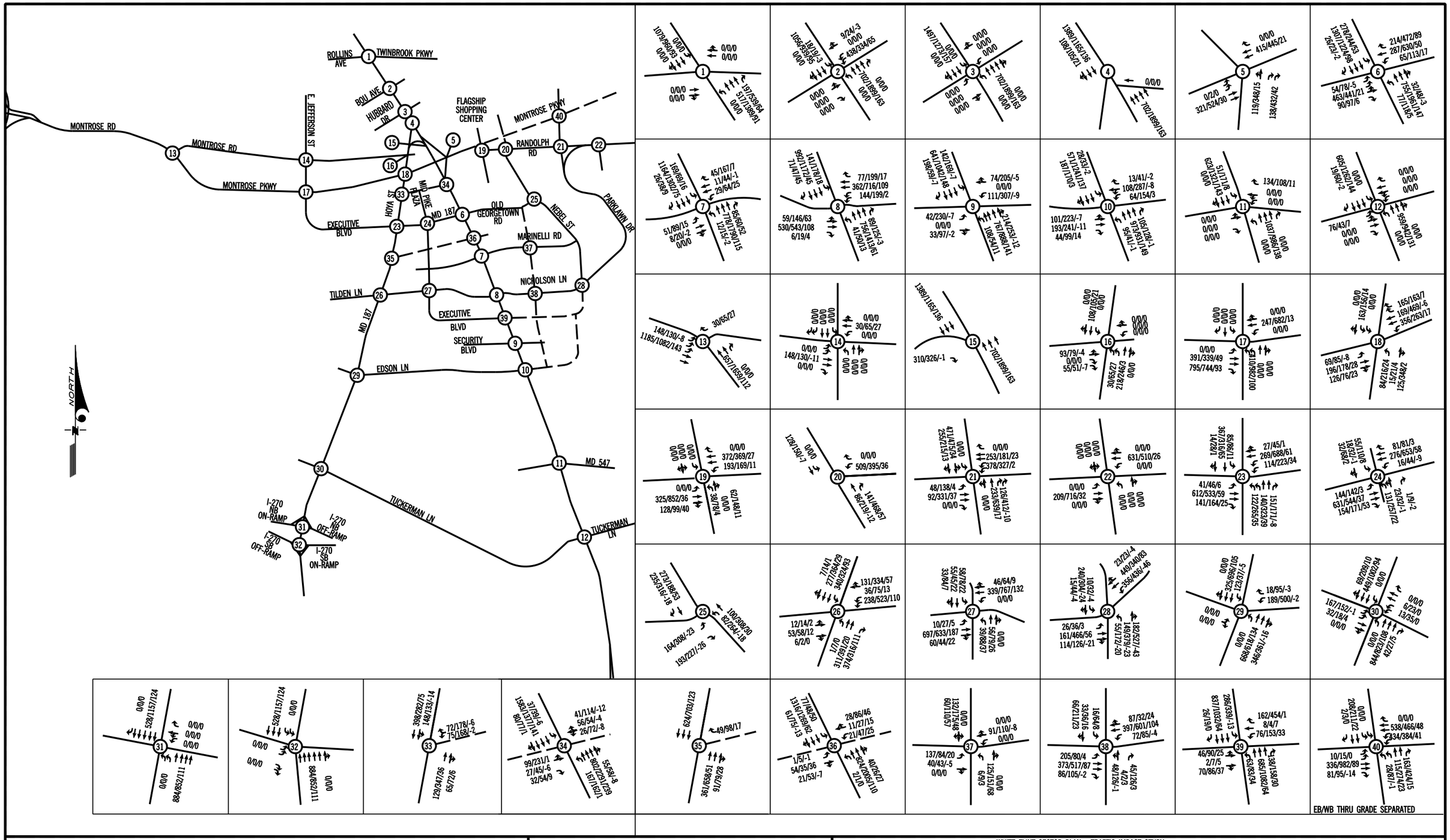

LEGEND: AM/PM/SATURDAY

Stantec

6110 Frost Place
Laurel, MD 20707
301-982-2800
www.stantec.com

WHITE FLINT SECTOR PLAN - TRAFFIC IMPACT STUDY

SECTOR PLAN AREA TRIP ASSIGNMENTS 2022

MONTGOMERY COUNTY, MARYLAND

FIGURE 10

11/16/12

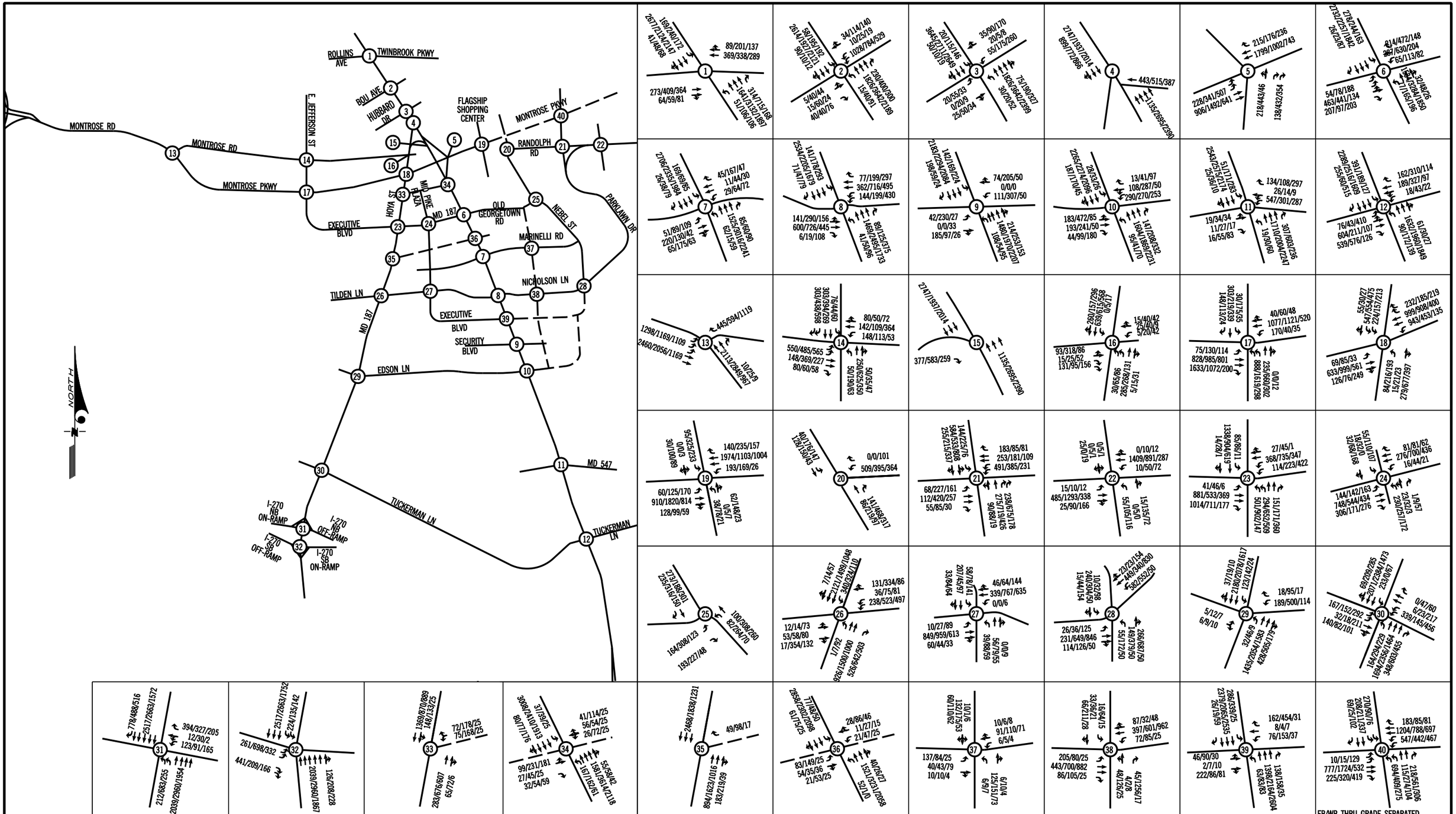

LEGEND: AM/PM/SATURDAY

Stantec
6110 Frost Place
Laurel, MD 20707
301-982-2800
www.stantec.com

WHITE FLINT SECTOR PLAN - TRAFFIC IMPACT STUDY

TOTAL TRAFFIC VOLUME FORECASTS 2022

MONTGOMERY COUNTY, MARYLAND

FIGURE 11

4.4 2022 TRAFFIC OPERATIONS

The 2022 traffic volumes shown in **Figure 11** were analyzed using CLV methodology. The CLV analysis worksheets are contained in **Appendix D** and are summarized in **Table 6**. The PM level of service results are also shown graphically in **Figure 12**. CLV results which exceed the policy are threshold by less than 10 percent are shown in orange. CLV results which exceed the policy area threshold by more than 10 percent are shown in red.

Ten of the study intersections are projected to operate above their policy area threshold during at least one (1) peak hour based on CLV analysis. Seven of those intersections would exceed their policy area thresholds by more than 10 percent.

The following intersections fail to meet the policy area standards based on the CLV analysis:

White Flint Policy Area

- MD 355 @ MD 187 – PM*
- MD 355 @ Nicholson Lane – PM*
- Hoya Street @ Montrose Parkway – AM*, PM*
- MD 187 @ Nicholson Ln/Tilden Ln – PM
- Nicholson Ln @ Nebel Street – PM*

North Bethesda Policy Area

- MD 355 @ Twinbrook Parkway – PM
- MD 355 @ Bou Avenue – AM, PM*
- Montrose Road @ Montrose Parkway – AM, PM*
- E. Jefferson Street @ Montrose Parkway – PM*
- MD 187 @ Poindexter Ln/Edson Ln - PM

* Indicates CLV's that exceed their respective standards by more than 10%

This analysis accounts for only the development planned to occur inside the sector plan area. The growth rates applied to MD 355, MD 187 and Montrose Parkway will account for a portion of regional growth, but it is possible that the intersections outside of the sector plan area will reach higher levels of congestion due to other pending development in the surrounding area.

Table 6: 2022 CLV Analysis Results

	Intersection	AM	PM	SAT
	White Flint Policy Area - 1800 CLV			
5	Montrose Parkway @ MD 355 Ramps	1,308	1,234	886
6	MD 187 @ MD 355	1,566	**2,299**	1,201
7	MD 355 @ Marinelli Rd	1,243	1,424	1,049
8	MD 355 @ Nicholson Ln	1,458	**2,236**	1,511
9	MD 355 @ Security Blvd	1,212	1,338	1,041
10	MD 355@ Edson Lane	1,440	1,751	1,154
16	Hoya Street @ Montrose Road	642	871	699
18	Hoya Street @ Montrose Pkwy	**2,241**	**2,305**	1,486
19	Randolph Road @ Chapman Ave/Maple Ave	1,225	1,534	918
20	Randolph Road @ Nebel St	637	790	608
23	MD 187 @ Executive Blvd./Hoya St	1,799	1,494	866
24	MD 187 @ Mid Pike/New Executive	619	796	667
25	MD 187 @ Nebel St	548	760	494
26	MD 187 @ Nicholson Ln/Tilden Ln	1,041	1,875	1,089
27	Nicholson Ln @ Executive Blvd.	648	677	677
28	Nicholson Ln @ Nebel St	1,190	**2,061**	901
33	Hoya St @ Mid Pike East-West	951	878	534
34	MD 355 @ Mid Pike East-West	1,315	1,612	944
35	MD 187 @ Main St/Market St	9,62	780	472
36	MD 355 @ Main Street/Market St	1,254	1,515	907
37	Marinelli Rd @ Citadel Ave	446	495	232
38	Nicholson Ln @ Citadel Ave	609	829	634
39	MD 355 @ Executive Extended	1,241	1,684	1,105
	Grosvenor Policy Area 1800 CLV			
11	MD 355 @ MD 547	1,343	1,246	1,343
12	MD 355 @ Tuckerman Ln	1,566	1,680	1,118
	North Bethesda Policy Area 1550 CLV			
1	MD 355 @ Twinbrook Parkway	1,300	1,685	1,162
2	MD 355 @ Bou Avenue	1,658	**2,113**	1,387
3	MD 355 @ Hubbard Shopping Center	1,477	1,510	1,342
13	Montrose Road @ Montrose Parkway	1,639	**1,978**	957
14	E. Jefferson Street @ Montrose Road	683	774	840
17	E. Jefferson Street @ Montrose Parkway	1,503	**1,946**	978
21	Randolph Road @ Parklawn Ave	840	1,147	1,062
22	Randolph Road @ Lauderdale Drive	842	928	476
29	MD 187 @ Poindexter Ln/Edson Lane	1,052	1,610	807
30	MD 187 @ Tuckerman Ln	1,197	1,391	1,318
31	MD 187 @ I 270 NB Ramps	1,299	1,403	874
32	MD 187 @ I 270 SB Ramps	1,165	1,404	847
40	Montrose Parkway @ Parklawn Drive	854	697	878

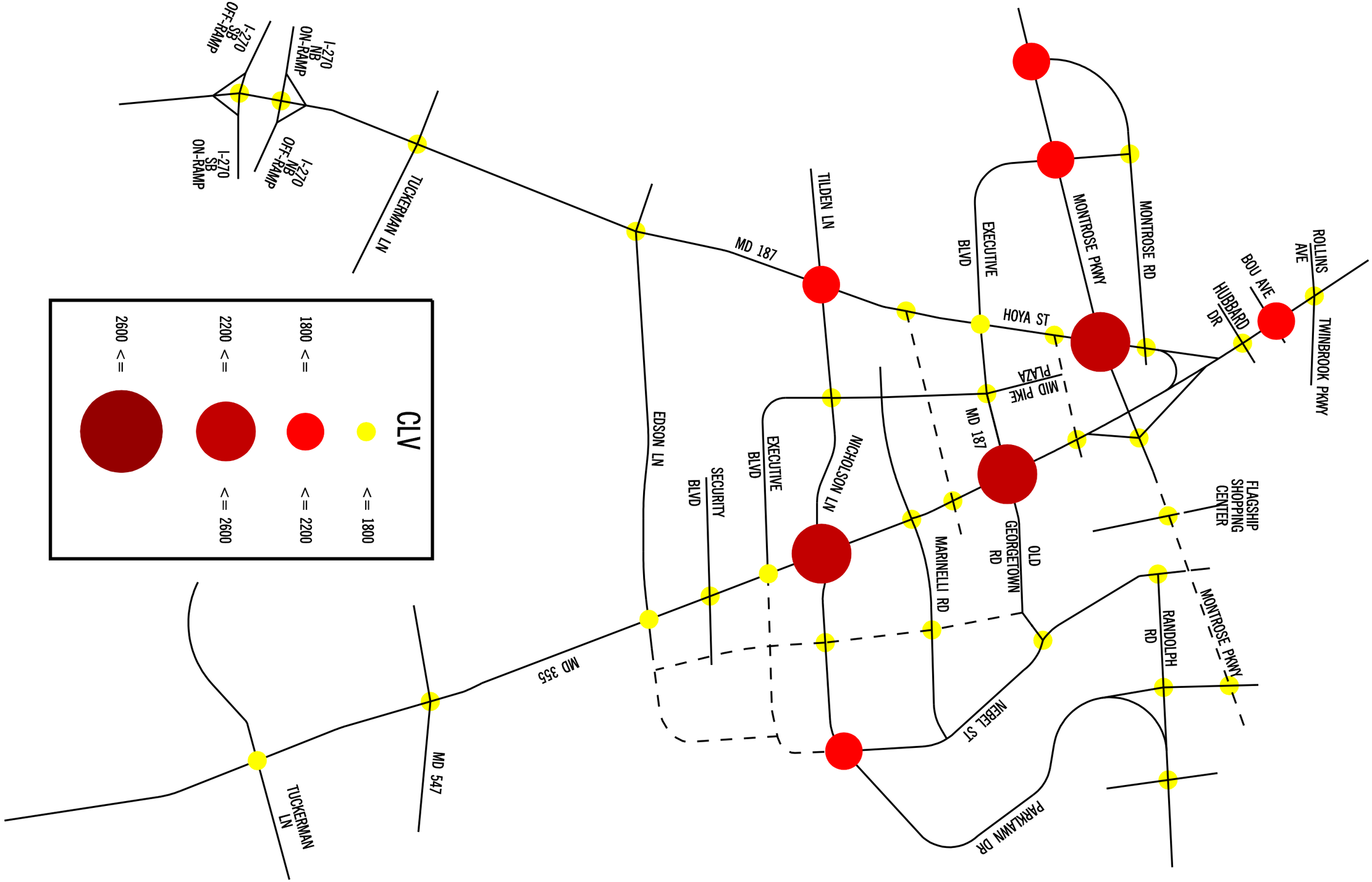

No.	REVISION	DATE	BY

Stantec

6110 Frost Place
Laurel, MD 20707
301-982-2800
www.stantec.com

WHITE FLINT SECTOR PLAN - TRAFFIC IMPACT STUDY

2022 PM LOS RESULTS

MONTGOMERY COUNTY, MARYLAND

FIGURE 12

5.0 2042 Full Build Out Conditions

5.1 2042 FULL BUILDOUT TRIP GENERATION

As outlined under 2022 conditions, the sector plan area is divided into 20 blocks, as shown on the map in **Figure 9**. The future development, by block and by use, was examined utilizing information provided by the White Flint Partnership/STV Inc. and approved by MNCPPC. These quantities include the pipeline developments already approved, the developments which are currently underway or have submitted sketch plans, future development that is anticipated by the property owners to occur under the sector plan under full build out, and existing development to remain.

The trips generated by this proposed development were calculated using ITE trip generation rates as previously discussed. The rates and equations used for the 2042 conditions are the same as discussed under 2022 conditions and were shown in **Table 4.**

The rates and equations were applied to the development quantities approved by MNCPPC to produce the total future trip generation for the entire sector plan area. The full-build out NADMS of 50 percent for commercial development and 51 percent for residential development was then applied to all peak hour trips. The remaining auto driver trips to be assigned to the roadway network are shown in the three right-hand columns of **Table 7**.

Table 7: 2042 Block by Block Trip Generation

Block	Land Use	MNCPPC Approved Development - 2042 Future	Future Trips			Future Trips with NADMS		
			AM Trips	PM Trips	SAT Trips	AM Trips	PM Trips	SAT Trips
1	Retail	33,500	123	240	326	60	118	160
	Residential	425	152	160	156	76	80	78
	County Rec Center	44,000	55	76	185	27	37	91
2	Office	987,514	1,172	1,185	263	574	581	129
	Retail	466,315	1,213	2,424	3,365	594	1,188	1,649
	Residential	1,227	385	433	397	192	216	198
	Hotel/Conference Center	230,885	134	143	164	66	70	80
3	Office	281,822	430	394	95	211	193	47
	Retail	140,000	413	820	1,132	202	402	555
	Residential	1,074	340	381	351	170	190	176
	Specialty Retail	1,200	3	43	5	2	21	2
4	Retail	35,000	127	249	339	62	122	166
	Residential	1,139	359	403	371	180	201	185
5	Office	291,500	441	405	98	216	199	48

Table 7: 2042 Block by Block Trip Generation

Block	Land Use	MNCPPC Approved Development - 2042 Future	Future Trips			Future Trips with NADMS		
			AM Trips	PM Trips	SAT Trips	AM Trips	PM Trips	SAT Trips
	Retail	78,474	250	494	680	123	242	333
	Residential	339	127	131	131	64	65	65
6	Retail	223,600	625	1,244	1,723	306	610	844
	Residential	397	144	150	148	72	75	74
7	Office	622,400	810	776	181	397	380	89
	Retail	49,965	171	336	459	84	164	225
	Residential	165	77	72	78	38	36	39
	Hotel	180,860	105	112	129	51	55	63
8	Office	157,271	269	255	59	132	125	29
	Retail	41,400	146	286	391	72	140	191
	Residential	441	157	165	161	78	83	81
9	Office	172,043	290	271	64	142	133	31
	Retail	80,571	256	505	695	125	248	341
	Residential	183	82	78	84	41	39	42
10	Office	744,452	935	913	209	458	447	103
	Residential	180	81	77	83	41	38	41
11	Office	100,000	188	191	41	92	93	20
12	Retail	103,883	318	631	869	156	309	426
	Residential	577	196	212	202	98	106	101
13	Industrial	36,904	48	71	13	23	35	6
14	Office	1,469,078	1,610	1,724	363	789	845	178
	Retail	196,458	557	1,108	1,533	273	543	751
	Residential	2,098	637	729	658	319	364	329
	Hotel	220,000	128	136	156	63	67	76
15	Residential	891	287	318	296	144	159	148
16	Office	308,000	461	424	102	226	208	50
	Retail	117,356	354	702	968	173	344	474
	Residential	546	187	201	193	94	101	96
	Industrial	33,127	44	68	12	22	33	6
17	Office	890,000	1,078	1,076	242	528	527	119
	Retail	365,200	971	1,939	2,690	476	950	1,318
	Residential	1,604	494	561	510	247	280	255
	Hotel	300,000	174	186	211	85	91	104
18	Office	1,021,800	1,204	1,223	271	590	599	133
	Retail	1,149,000	2,795	5,585	7,773	1,369	2,736	3,809
	Residential	2,205	668	765	690	334	383	345

Table 7: 2042 Block by Block Trip Generation

Block	Land Use	MNCPPC Approved Development - 2042 Future	Future Trips			Future Trips with NADMS		
			AM Trips	PM Trips	SAT Trips	AM Trips	PM Trips	SAT Trips
	Hotel	275,000	160	171	194	78	84	95
19	Office	907,886	1,095	1,096	246	537	537	121
	Retail	65,412	214	422	580	105	207	284
	Residential	65	48	38	48	24	19	24
20	Retail	225,000	628	1,251	1,733	308	613	849
	Residential	785	257	282	264	128	141	132
	Industrial	333,124	260	299	117	128	146	57
Office Subtotal		7,953,766	9,983	9,933	2,236	4,892	4,867	1,097
Retail Subtotal		3,371,134	9,161	18,235	25,256	4,488	8,936	12,375
Hotel Subtotal		1,206,745	700	748	854	343	367	418
Industrial Subtotal		448,355	411	556	331	202	272	162
Total Commercial		**12,980,000**	**20,254**	**29,472**	**28,677**	**9,925**	**14,442**	**14,052**
Total Residential		**14,341**	**4,678**	**5,154**	**4,822**	**2,340**	**2,576**	**2,409**
Total Peak Hour Trips			**24,932**	**34,626**	**33,499**	**12,265**	**17,018**	**16,461**

5.2 2042 FULL BUILDOUT ROADWAY NETWORK

The 2042 full build out roadway network assumes all planned road improvements, as outlined in **Section 3.1 Planned Road Improvements**, would be in place. The model also assumes that all private business-level streets interior to the development blocks will be complete. Generally, study intersections were assumed full-movement, with the exception of Old Georgetown Road at Main/Market Street. For the purposes of this long range study, signalization was generally assumed; however, additional analysis would need to be performed for all future signals to determine if they are warranted.

5.3 2042 TRIP DISTRIBUTION AND TRAFFIC ASSIGNMENTS

The total future trips for 2042 were then assigned to the roadway network as described above. The distribution for the future trips was based on the distribution outlined by M-NCPPC in their original analysis of the sector plan traffic impact. The majority of the available transit options serve the north-south corridor; therefore, in the future with heavier transit use, the vehicular traffic would be more heavily weighted to the east and west. The distribution used for the future trips reflects this change. The assigned trips for the overall sector plan area trip generation are shown on **Figure 13**, with average distribution noted. The assigned future sector plan area trips as shown in **Figure 13** were then added to the background through trips plus growth shown in **Figure 8**, resulting in the 2042 Total Future Trips as shown in **Figure 14**.

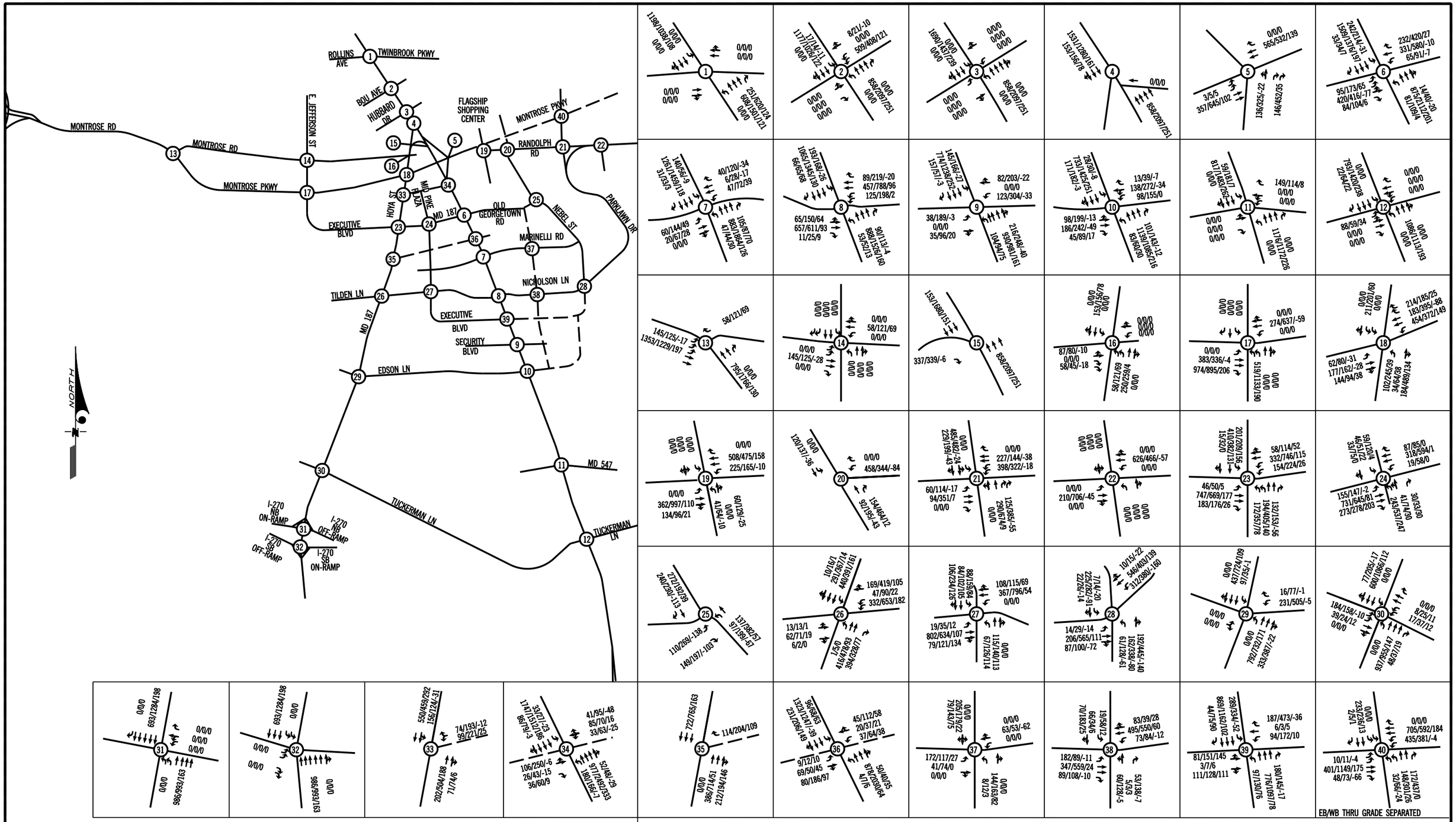

LEGEND: AM/PM/SATURDAY

Stantec

6110 Frost Place
Laurel, MD 20707
301-982-2800
www.stantec.com

WHITE FLINT SECTOR PLAN - TRAFFIC IMPACT STUDY

SECTOR PLAN AREA TRIP ASSIGNMENTS
2042 FULL BUILD OUT

MONTGOMERY COUNTY, MARYLAND

FIGURE 13

EB/WB THRU GRADE SEPARATED

11/16/12

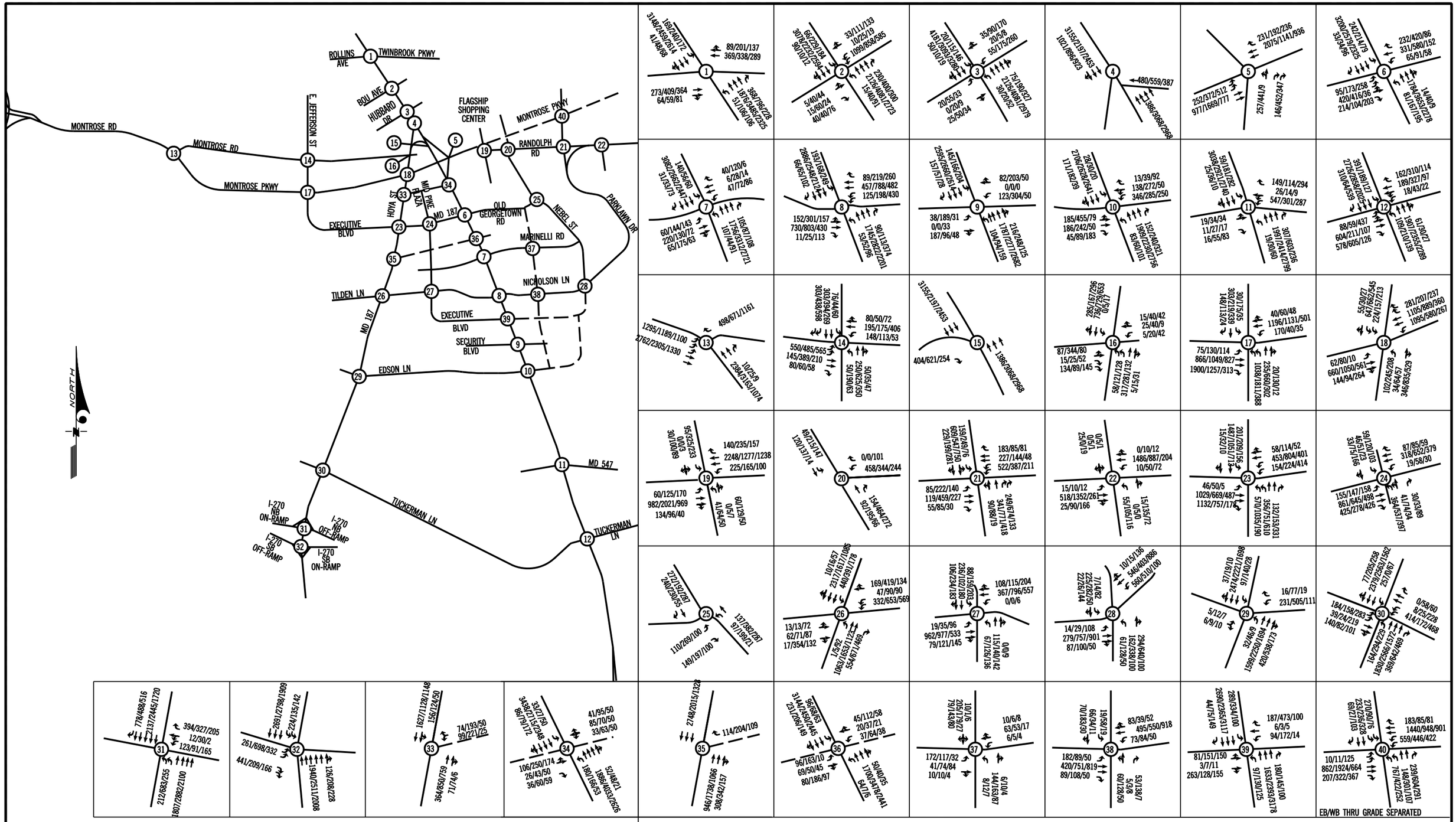

LEGEND: AM/PM/SATURDAY

Stantec

6110 Frost Place
Laurel, MD 20707
301-982-2800
www.stantec.com

WHITE FLINT SECTOR PLAN - TRAFFIC IMPACT STUDY

TOTAL TRAFFIC VOLUME FORECASTS
2042 FULL BUILD OUT

MONTGOMERY COUNTY, MARYLAND

FIGURE 14

11/16/12

5.4 2042 TRAFFIC OPERATIONS

The 2042 traffic volumes shown in **Figure 14** were analyzed using CLV methodology. The CLV analysis worksheets are contained in **Appendix E** and are summarized in **Table 8**. The PM CLV level of service results are also shown graphically on **Figure 15**. CLV results which exceed the policy area threshold by less than 10 percent are shown in orange. CLV results which exceed the policy area threshold by more than 10 percent are shown in red and bold.

Fifteen of the study intersections are projected to operate above their policy area threshold during at least one (1) peak hour based on CLV analysis. Nine of those intersections would exceed their respective thresholds by more than 10 percent.

The following intersections fail to meet the policy area standards based on the CLV analysis:

White Flint Policy Area

- MD 355 @ MD 187 – PM*
- MD 355 @ Nicholson Lane – PM*
- MD 355 @ Edson Lane – PM
- Hoya Street @ Montrose Parkway – AM*, PM* & Saturday
- MD 187 @ Executive Blvd./Hoya St – AM*
- MD 187 @ Nicholson Ln/Tilden Ln – PM*
- Nicholson Ln @ Nebel Street – PM
- MD 355 @ Excecutive Blvd Extended - PM

Grosvenor Policy Area

- MD 355 @ Tuckerman Lane– PM

North Bethesda Policy Area

- MD 355 @ Twinbrook Parkway – PM*
- MD 355 @ Bou Avenue – AM*, PM* & Saturday
- MD 355 @ Hubbard Shopping Center – AM, PM & Saturday
- Montrose Road @ Montrose Parkway – AM*, PM*
- E. Jefferson Street @ Montrose Parkway – AM, PM*
- MD 187 @ Poindexter Lane/Edson Lane – PM

* Indicates CLV's that exceed their respective standards by more than 10%

This analysis accounts for only the development to occur inside the sector plan area. The growth rates applied to MD 355, MD 187 and Montrose Parkway will account for a portion of regional growth, but it is possible that the intersections outside of the sector plan area will reach higher levels of congestion due to other pending development in the surrounding area.

Table 8: 2042 Full Build Out CLV Analysis

	Intersection	AM	PM	SAT
	White Flint Policy Area - 1800 CLV			
5	Montrose Parkway @ MD 355 Ramps	1,508	1,326	987
6	MD 187 @ MD 355	1,787	**2,378**	1,316
7	MD 355 @ Marinelli Rd	1,445	1,528	1,225
8	MD 355 @ Nicholson Ln	1,663	**2,435**	1,632
9	MD 355 @ Security Blvd	1,374	1,478	1,257
10	MD 355@ Edson Lane	1,634	1,889	1,355
16	Hoya Street @ Montrose Road	718	997	763
18	Hoya Street @ Montrose Pkwy	**2,603**	**2,777**	1,862
19	Randolph Road @ Chapman Ave/Maple Ave	1,368	1,616	1,071
20	Randolph Road @ Nebel St	599	754	457
23	MD 187 @ Executive Blvd./Hoya St	**2,064**	1,732	1,003
24	MD 187 @ Mid Pike/New Executive	797	986	807
25	MD 187 @ Nebel St	518	660	408
26	MD 187 @ Nicholson Ln/Tilden Ln	1,268	**2,126**	1,268
27	Nicholson Ln @ Executive Blvd.	800	907	827
28	Nicholson Ln @ Nebel St	1,217	1,956	932
33	Hoya St @ Mid Pike East-West	1,118	1,078	710
34	MD 355 @ Mid Pike East-West	1,502	1,729	1,168
35	MD 187 @ Main St/Market St	1,131	974	600
36	MD 355 @ Main Street/Market St	1,499	1,682	1,159
37	Marinelli Rd @ Citadel Ave	547	511	212
38	Nicholson Ln @ Citadel Ave	684	827	655
39	MD 355 @ Executive Extended	1,449	1,843	1,459
	Grosvenor Policy Area 1800 CLV			
11	MD 355 @ MD 547	1,526	1,374	1,547
12	MD 355 @ Tuckerman Ln	1,688	1,839	1,297
	North Bethesda Policy Area 1550 CLV			
1	MD 355 @ Twinbrook Parkway	1,474	**1,815**	1,334
2	MD 355 @ Bou Avenue	**1,875**	**2,354**	1,611
3	MD 355 @ Hubbard Shopping Center	1,675	1,641	1,576
13	Montrose Road @ Montrose Parkway	**1,782**	**2,152**	1,009
14	E. Jefferson Street @ Montrose Road	711	809	862
17	E. Jefferson Street @ Montrose Parkway	1,656	**2,067**	1,045
21	Randolph Road @ Parklawn Ave	877	1,148	943
22	Randolph Road @ Lauderdale Drive	883	959	435
29	MD 187 @ Poindexter Ln/Edson Lane	1,203	1,698	847
30	MD 187 @ Tuckerman Ln	1,461	1,503	1,353
31	MD 187 @ I 270 NB Ramps	1,299	1,348	874
32	MD 187 @ I 270 SB Ramps	1,230	1,454	905
40	Montrose Parkway @ Parklawn Drive	918	727	794

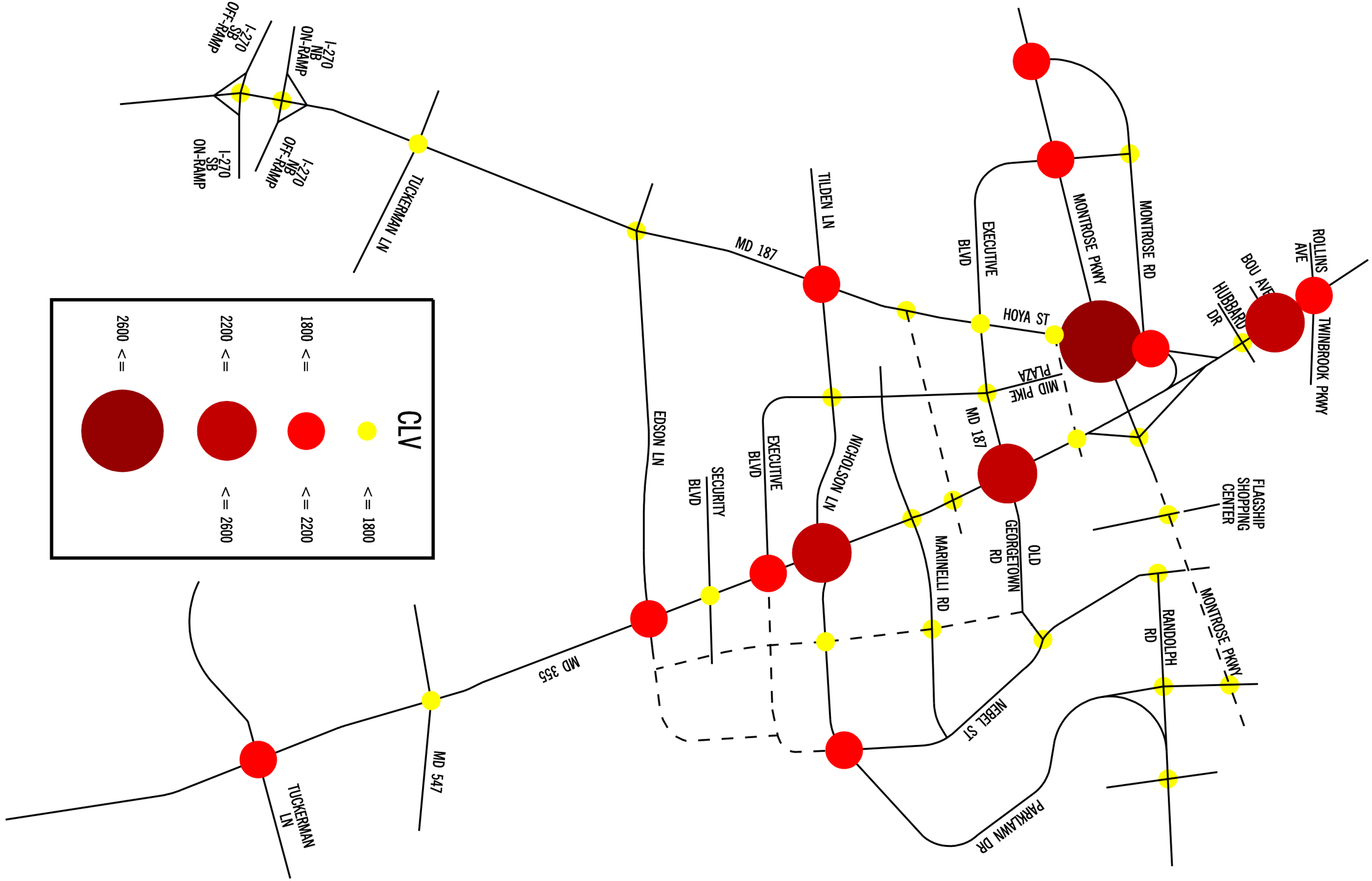

No.	REVISION	DATE	BY

Stantec

6110 Frost Place
Laurel, MD 20707
301-982-2800
www.stantec.com

WHITE FLINT SECTOR PLAN - TRAFFIC IMPACT STUDY

2042 PM LOS RESULTS

MONTGOMERY COUNTY, MARYLAND

FIGURE 15

5.4.1 2042 No Growth Scenario Test

In order to ascertain the impact of the regional growth applied in this analysis, the intersections identified above as exceeding the White Flint Policy Area threshold by more than 10 percent were also analyzed without growth. The trip generation and assignments as previously described were otherwise maintained. The resulting 2042 No-Growth volumes are shown in **Figure 16**. These volumes were analyzed using CLV methodology and the results are shown in **Table 9**. Though the CLV levels are reduced, all five intersections would continue operate more than 10 percent beyond the White Flint threshold, in the no-growth scenario. This indicates that the applied regional growth is not the driving factor in the projections for intersections within the White Flint Sector Plan area exceeding the CLV threshold.

Table 9: 2042 No Growth Selected Intersection CLV Analysis

	Intersection	AM	PM
6	MD 187 @ MD 355	1,646	**2,263**
8	MD 355 @ Nicholson Ln	1,610	**2,297**
18	Hoya Street @ Montrose Pkwy	**2,402**	**2,584**
23	MD 187 @ Executive Blvd./Hoya St	**1,833**	1,627
26	MD 187 @ Nicholson Ln/Tilden Ln	1,243	**2,075**

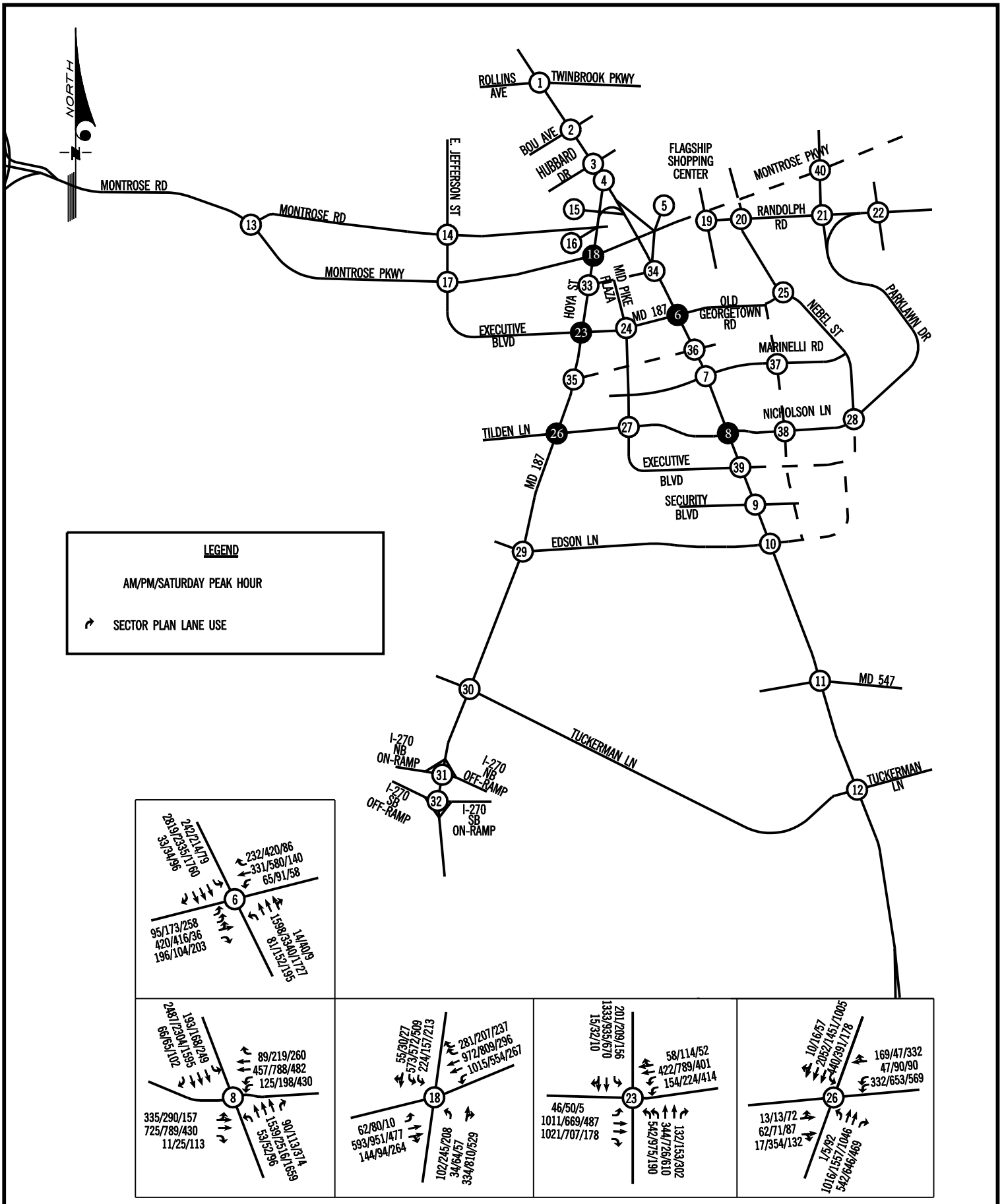

Stantec

6110 Frost Place
Laurel, MD 20707
www.stantec.com

WHITE FLINT SECTOR PLAN - TRAFFIC IMPACT STUDY

FIGURE 16

2042 NO GROWTH TRAFFIC FORECAST VOLUMES

MONTGOMERY COUNTY, MARYLAND

2/28/2014

6.0 Conclusion and Potential Mitigation

Based on the CLV analysis methodology, several intersections are projected to operate beyond the policy area threshold. Given the future transit-oriented, walkable nature of the White Flint Sector Plan area, and the long range of the forecasts in question, it has been suggested by Sabra Wang in a White Paper produced for MD SHA that a forecasted CLV within ten percent of the policy area threshold could be considered acceptable. Based on CLV methodology, nine total intersections are projected to operate more than 10 percent over the policy area standard in 2042. Five of these intersections are inside the White Flint Sector Plan area. Potential mitigation measures for these intersections have been identified. The resulting CLV analysis is summarized in **Table 10**, and the potential lane use changes are shown in **Figure 17**.

The remaining four study intersections outside of the White Flint Sector Plan area will be studied and addressed as part of the ongoing Montgomery County CIP project, based on MNCPPC CLATR review. Additionally, since these intersections are outside of the White Flint Sector plan area, they will also be included in traditional LATR studies performed for any nearby developments, resulting in ongoing analysis and potential mitigation.

CLV results which exceed the policy area threshold by less than 10 percent are shown in orange. CLV results which exceed the policy area threshold by more than 10 percent are shown in red. The intersection of MD 187 at MD 355 would require an additional northbound through lane on MD 355 in order to operate with an acceptable CLV. All other intersection mitigation measures include turn lanes or re-assignment of existing lanes. Additional right-of-way would be required for many of these suggested measures, which may or may not be feasible in the future as additional parcels redevelop. It is recommended that these key intersections in the policy area are monitored, and physical intersection improvements considered at such time that traffic counts indicate that the intersections are approaching high congestions levels, if feasible. Any expansions to planned right-of-way should carefully balance the goals of a transit oriented area with traffic congestion needs.

Table 10: 2042 CLV Analysis with Mitigation

	Intersection	AM	PM
	Potential Mitigation		
6	MD 187 @ MD 355 – No Mitigation	1,787	**2,378**
	with SB 2nd Left, WB 2nd Thru, EB LU Adj.	1,663	**2,021**
	with NB 4th Thru, SB 2nd Left, WB 2nd Thru	1,631	1,761
8	MD 355 @ Nicholson Ln – No Mitigation	1,663	**2,435**
	with Separate EB Left	1,583	1,931
18	Hoya Street @ Montrose Pkwy – No Mitigation	**2,603**	**2,777**
	with NB Right, WB 2nd Left, SB L to TL	1,557	1,810
23	MD 187 @ Executive Blvd./Hoya St – No Mitigation	**2,064**	1,732
	with EB double right or EB Free Right	1,775	1,732

Table 10: 2042 CLV Analysis with Mitigation

	Intersection	AM	PM
	Potential Mitigation		
26	MD 187 @ Nicholson Ln/Tilden Ln – No Mitigation	1,268	**2,126**
	with SB 2nd Left	1,127	1,969

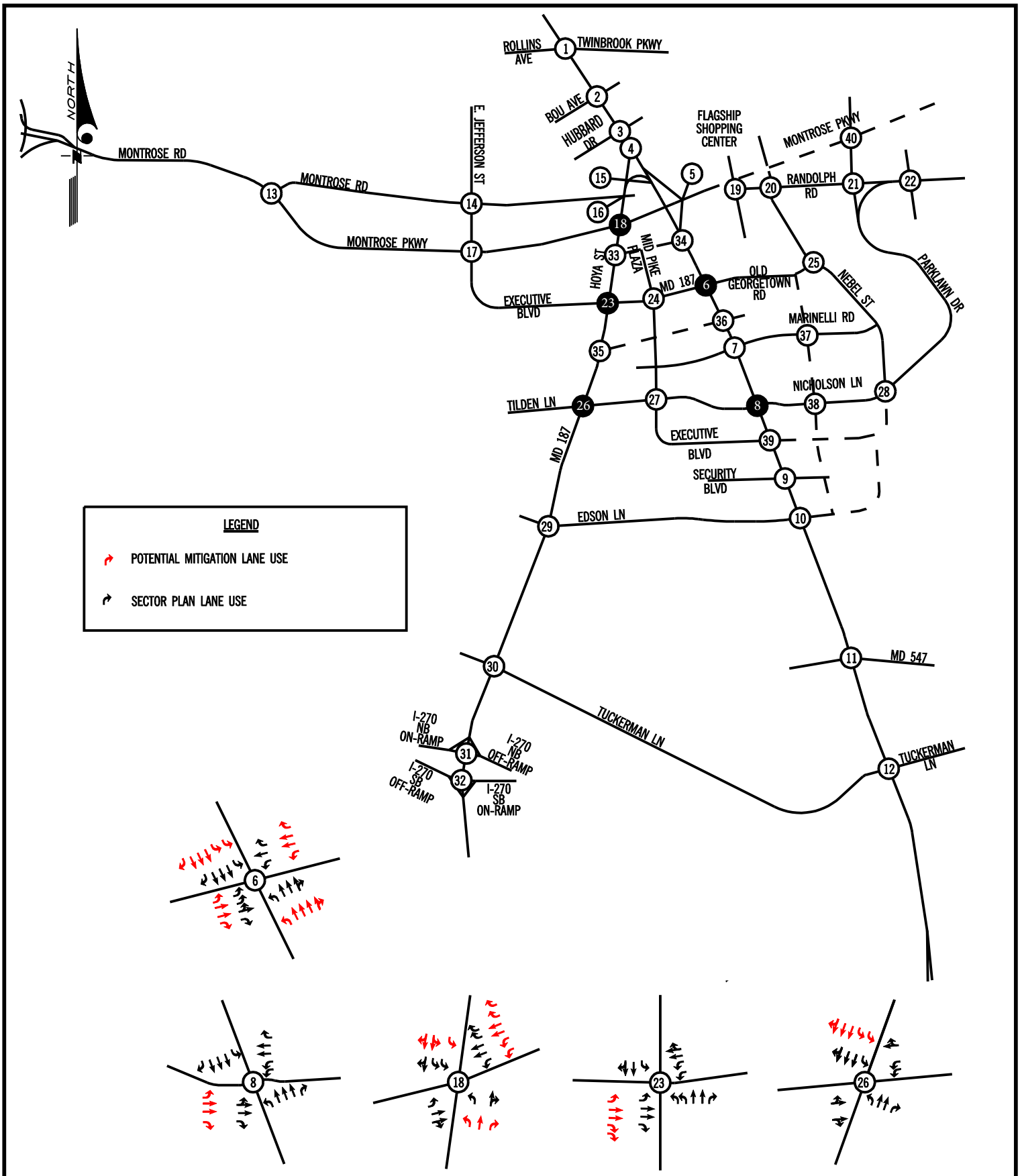

Stantec

6110 Frost Place
Laurel, MD 20707
www.stantec.com

WHITE FLINT SECTOR PLAN - TRAFFIC IMPACT STUDY

FIGURE 17

POTENTIAL MITIGATION LANE USE

MONTGOMERY COUNTY, MARYLAND

2/28/2014

Appendix A

Maryland State Highway Administration
Highway Information Services Division
Turning Counts Study - Field Sheet

Request No.:
Job No.:

Location: MD 187 and I-270 Ramps (South Traffic Light)
Date: 9/27/2011 Tuesday
Recorder: AM/NT
Interval (dd) : 15
(In Minutes)

County: Montgomery
Town: North Bethesda
Weather: Cloudy

PEAK HOURS	AM PERIOD 6:00AM-12:00PM	Start	End	Volume	PM PERIOD 12:00PM-7:00PM	Start	End	Volume
		08:15	09:15	4479		17:00	18:00	5630

Street Name-->	MD 187				MD 187				I-270 Ramps				I-270 Ramps				
HOUR	From North				From South				From East				From West				GRAND
ENDING	L	T	R	TOT	L	T	R	TOT	L	T	R	TOT	L	T	R	TOT	TOTAL
00:15				0				0				0				0	0
00:30				0				0				0				0	0
00:45				0				0				0				0	0
01:00				0				0				0				0	0
01:15				0				0				0				0	0
01:30				0				0				0				0	0
01:45				0				0				0				0	0
02:00				0				0				0				0	0
02:15				0				0				0				0	0
02:30				0				0				0				0	0
02:45				0				0				0				0	0
03:00				0				0				0				0	0
03:15				0				0				0				0	0
03:30				0				0				0				0	0
03:45				0				0				0				0	0
04:00				0				0				0				0	0
04:15				0				0				0				0	0
04:30				0				0				0				0	0
04:45				0				0				0				0	0
05:00				0				0				0				0	0
05:15				0				0				0				0	0
05:30				0				0				0				0	0
05:45				0				0				0				0	0
06:00				0				0				0				0	0
06:15				0				0				0				0	0
06:30				0				0				0				0	0
06:45	21	196		217	0	128	19	147				0	24	2	41	67	431
07:00	51	343		394	0	140	26	166				0	42	6	83	131	691
07:15	60	435		495	0	230	24	254				0	50	0	83	133	882
07:30	52	459		511	0	317	38	355				0	68	0	86	154	1020
07:45	51	493		544	0	288	27	315				0	78	0	113	191	1050
08:00	43	529		572	0	330	29	359				0	74	0	89	163	1094
08:15	54	458		512	0	307	30	337				0	71	0	107	178	1027
08:30	**83**	**543**		**626**	**0**	**337**	**33**	**370**				**0**	**33**	**0**	**111**	**144**	**1140**
08:45	**44**	**545**		**589**	**0**	**313**	**34**	**347**				**0**	**83**	**0**	**134**	**217**	**1153**
09:00	**46**	**526**		**572**	**0**	**329**	**19**	**348**				**0**	**100**	**0**	**124**	**224**	**1144**
09:15	**54**	**460**		**514**	**0**	**310**	**32**	**342**				**0**	**72**	**0**	**114**	**186**	**1042**
09:30	36	356		392	0	296	20	316				0	72	0	113	185	893
09:45				0				0				0				0	0
10:00				0				0				0				0	0
10:15				0				0				0				0	0
10:30				0				0				0				0	0
10:45				0				0				0				0	0
11:00				0				0				0				0	0
11:15				0				0				0				0	0
11:30				0				0				0				0	0
11:45				0				0				0				0	0
12:00				0				0				0				0	0
12:15				0				0				0				0	0
12:30				0				0				0				0	0
12:45				0				0				0				0	0
13:00				0				0				0				0	0
13:15				0				0				0				0	0
13:30				0				0				0				0	0
13:45				0				0				0				0	0
14:00				0				0				0				0	0
14:15				0				0				0				0	0
14:30				0				0				0				0	0
14:45				0				0				0				0	0
15:00				0				0				0				0	0
15:15				0				0				0				0	0
15:30				0				0				0				0	0
15:45				0				0				0				0	0
16:00				0				0				0				0	0
16:15	41	350	0	391	0	604	64	668				0	113	1	23	137	1196
16:30	32	361	0	393	0	634	41	675				0	93	0	39	132	1200
16:45	34	378	0	412	0	638	43	681				0	115	0	30	145	1238
17:00	34	401	0	435	0	667	32	699				0	169	0	40	209	1343
17:15	**33**	**367**	**0**	**400**	**0**	**725**	**63**	**788**				**0**	**169**	**0**	**42**	**211**	**1399**
17:30	**31**	**387**	**0**	**418**	**0**	**773**	**47**	**820**				**0**	**192**	**0**	**54**	**246**	**1484**
17:45	**35**	**373**	**0**	**408**	**0**	**695**	**53**	**748**				**0**	**158**	**0**	**52**	**210**	**1366**
18:00	**36**	**421**	**0**	**457**	**0**	**639**	**45**	**684**				**0**	**179**	**0**	**61**	**240**	**1381**
18:15	44	370	0	414	0	635	46	681				0	160	1	70	231	1326
18:30	22	379	0	401	0	669	31	700				0	141	1	80	222	1323
18:45	41	362	0	403	0	627	41	668				0	118	0	37	155	1226
19:00	28	257	0	285	0	499	39	538				0	108	0	47	155	978
19:15				0				0				0				0	0
19:30				0				0				0				0	0
19:45				0				0				0				0	0
20:00				0				0				0				0	0
20:15				0				0				0				0	0
20:30				0				0				0				0	0
20:45				0				0				0				0	0
21:00				0				0				0				0	0
TOTAL	**1006**	**9749**	**0**	**10755**	**0**	**11130**	**876**	**12006**	**0**	**0**	**0**	**0**	**2482**	**11**	**1773**	**4266**	**27027**
AM Peak Vol	227	2074	0	2301	0	1289	118	1407	0	0	0	0	288	0	483	771	4479
PM Peak Vol	135	1548	0	1683	0	2832	208	3040	0	0	0	0	698	0	209	907	5630

Maryland State Highway Administration
Highway Information Services Division
Turning Counts Study - Field Sheet

Request No.:
Job No.:

Location: MD 187 and I-270 Ramps (South Traffic Light)
Date: 9/27/2011 Tuesday
Recorder: AM/NT
Interval (dd) : 15
(In Minutes)

County: Montgomery
Town: North Bethesda
Weather: Cloudy

PEAK HOURS	AM PERIOD 6:00AM-12:00PM	Start	End	Volume	PM PERIOD 12:00PM-7:00PM	Start	End	Volume
		08:15	09:15	**4479**		17:00	18:00	**5630**

PEDESTRIAN SCHOOL CHILDREN & U-TURN BREAKDOWN

Hour	MD 187			MD 187			I-270 Ramps			I-270 Ramps		
Ending	S.C.	PED.	U.T.	S.C.	PED.	U.T.	S.C.	PED.	U.T.	S.C.	PED.	U.T.
00:15												
00:30												
00:45												
01:00												
01:15												
01:30												
01:45												
02:00												
02:15												
02:30												
02:45												
03:00												
03:15												
03:30												
03:45												
04:00												
04:15												
04:30												
04:45												
05:00												
05:15												
05:30												
05:45												
06:00												
06:15												
06:30												
06:45												
07:00												
07:15												
07:30												
07:45												
08:00												
08:15												
08:30												
08:45												
09:00												
09:15												
09:30												
09:45												
10:00												
10:15												
10:30												
10:45												
11:00												
11:15												
11:30												
11:45												
12:00												
12:15												
12:30												
12:45												
13:00												
13:15												
13:30												
13:45												
14:00												
14:15												
14:30												
14:45												
15:00												
15:15												
15:30												
15:45												
16:00												
16:15												
16:30												
16:45												
17:00												
17:15												
17:30												
17:45												
18:00												
18:15												
18:30												
18:45												
19:00												
19:15												
19:30												
19:45												
20:00												
20:15												
20:30												
20:45												
21:00												
TOTAL	**0**	**0**	**0**	**0**	**0**	**0**	**0**	**0**	**0**	**0**	**0**	**0**
AM Peak Vol	0	0	0	0	0	0	0	0	0	0	0	0
PM Peak Vol	0	0	0	0	0	0	0	0	0	0	0	0

Maryland State Highway Administration
Highway Information Services Division
Turning Counts Study - Field Sheet

Request No.:
Job No.:

Location: MD 187 and I-270 Ramps (South Traffic Light)
Date: 9/27/2011 Tuesday
Recorder: AM/NT
Interval (dd) : 15
(In Minutes)

County: Montgomery
Town: North Bethesda
Weather: Cloudy

PEAK HOURS	AM PERIOD 6:00AM-12:00PM	Start	End	Volume	PM PERIOD 12:00PM-7:00PM	Start	End	Volume
		08:15	09:15	4479		17:00	18:00	5630

Turning Movement Summary:

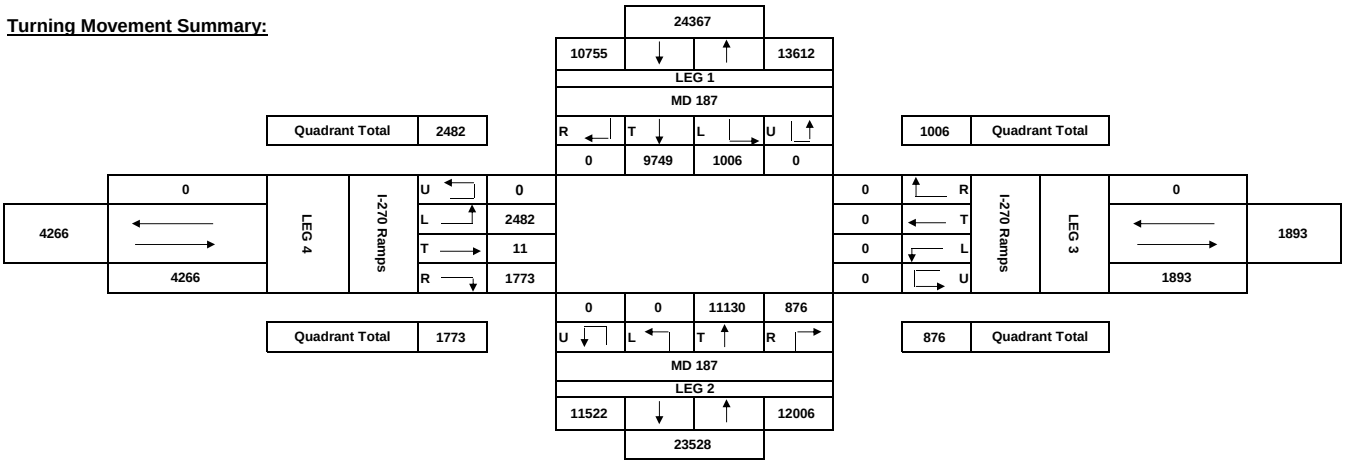

Comments:

AM Peak Hour :

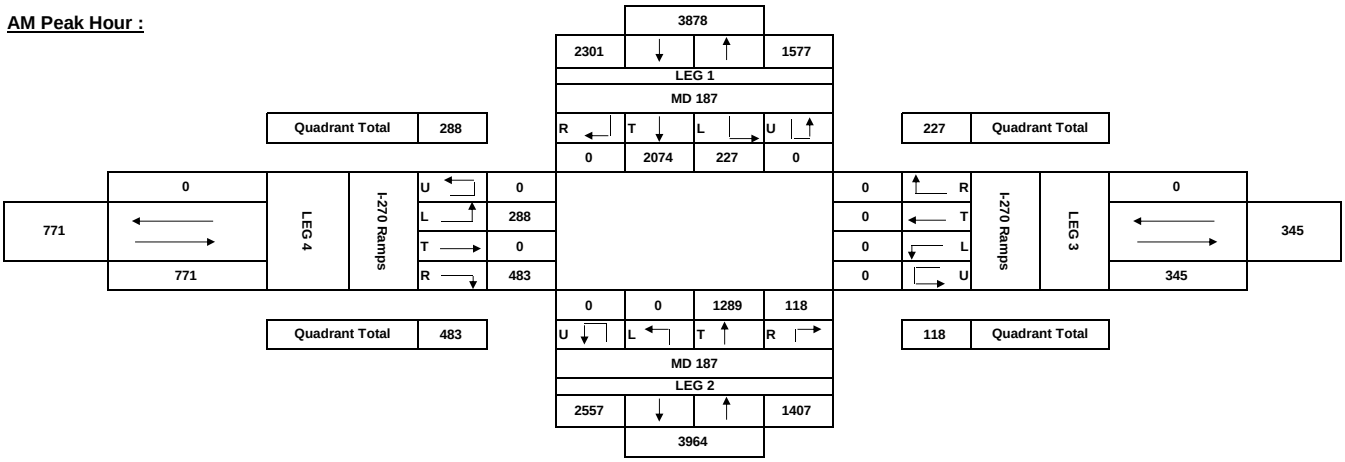

PM Peak Hour :

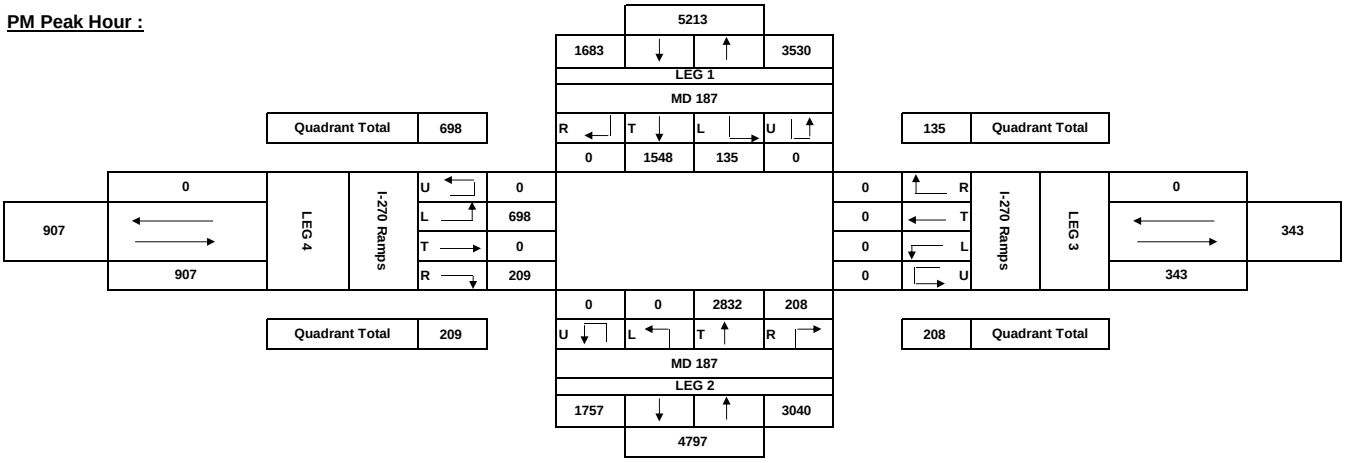

Maryland State Highway Administration
Highway Information Services Division
Turning Counts Study - Field Sheet

Request No.:
Job No.:

Location: MD 187 at I-270 Ramps (North Traffic Light)
Date: 9/27/2011 Tuesday
Recorder: LS/MO
Interval (dd) : 15
(In Minutes)

County: Montgomery
Town: North Bethesda
Weather: Cloudy

PEAK HOURS	AM PERIOD 6:00AM-12:00PM	Start	End	Volume	PM PERIOD 12:00PM-7:00PM	Start	End	Volume
		07:45	08:45	4894		17:00	18:00	6130

Street Name-->	MD 187				MD 187				I-270 Ramps				I-270 Ramps				
HOUR	From North				From South				From East				From West				GRAND
ENDING	L	T	R	TOT	L	T	R	TOT	L	T	R	TOT	L	T	R	TOT	TOTAL
00:15				0				0				0				0	0
00:30				0				0				0				0	0
00:45				0				0				0				0	0
01:00				0				0				0				0	0
01:15				0				0				0				0	0
01:30				0				0				0				0	0
01:45				0				0				0				0	0
02:00				0				0				0				0	0
02:15				0				0				0				0	0
02:30				0				0				0				0	0
02:45				0				0				0				0	0
03:00				0				0				0				0	0
03:15				0				0				0				0	0
03:30				0				0				0				0	0
03:45				0				0				0				0	0
04:00				0				0				0				0	0
04:15				0				0				0				0	0
04:30				0				0				0				0	0
04:45				0				0				0				0	0
05:00				0				0				0				0	0
05:15				0				0				0				0	0
05:30				0				0				0				0	0
05:45				0				0				0				0	0
06:00				0				0				0				0	0
06:15				0				0				0				0	0
06:30				0				0				0				0	0
06:45	0	213	54	267	25	121	0	146	17	2	47	66				0	479
07:00	0	354	97	451	10	166	0	176	23	1	65	89				0	716
07:15	0	447	169	616	21	260	0	281	24	2	59	85				0	982
07:30	0	454	156	610	32	373	0	405	32	5	83	120				0	1135
07:45	0	487	161	648	42	303	0	345	30	3	85	118				0	1111
08:00	**0**	**523**	**175**	**698**	**54**	**368**	**0**	**422**	**30**	**3**	**115**	**148**				**0**	**1268**
08:15	**0**	**453**	**196**	**649**	**53**	**329**	**0**	**382**	**25**	**1**	**107**	**133**				**0**	**1164**
08:30	**0**	**507**	**205**	**712**	**50**	**357**	**0**	**407**	**37**	**3**	**87**	**127**				**0**	**1246**
08:45	**0**	**499**	**202**	**701**	**55**	**339**	**0**	**394**	**31**	**5**	**85**	**121**				**0**	**1216**
09:00	0	475	219	694	58	339	0	397	29	3	88	120				0	1211
09:15	0	445	190	635	48	346	0	394	27	1	73	101				0	1130
09:30	0	356	162	518	59	378	0	437	28	4	81	113				0	1068
09:45				0				0				0				0	0
10:00				0				0				0				0	0
10:15				0				0				0				0	0
10:30				0				0				0				0	0
10:45				0				0				0				0	0
11:00				0				0				0				0	0
11:15				0				0				0				0	0
11:30				0				0				0				0	0
11:45				0				0				0				0	0
12:00				0				0				0				0	0
12:15				0				0				0				0	0
12:30				0				0				0				0	0
12:45				0				0				0				0	0
13:00				0				0				0				0	0
13:15				0				0				0				0	0
13:30				0				0				0				0	0
13:45				0				0				0				0	0
14:00				0				0				0				0	0
14:15				0				0				0				0	0
14:30				0				0				0				0	0
14:45				0				0				0				0	0
15:00				0				0				0				0	0
15:15				0				0				0				0	0
15:30				0				0				0				0	0
15:45				0				0				0				0	0
16:00				0				0				0				0	0
16:15	0	366	107	473	167	528	0	695	12	3	47	62				0	1230
16:30	0	388	127	515	199	558	0	757	17	0	54	71				0	1343
16:45	0	395	106	501	167	589	0	756	17	6	50	73				0	1330
17:00	0	395	137	532	200	651	0	851	20	5	71	96				0	1479
17:15	**0**	**378**	**114**	**492**	**187**	**709**	**0**	**896**	**21**	**5**	**68**	**94**				**0**	**1482**
17:30	**0**	**411**	**135**	**546**	**187**	**816**	**0**	**1003**	**20**	**10**	**86**	**116**				**0**	**1665**
17:45	**0**	**379**	**131**	**510**	**162**	**706**	**0**	**868**	**26**	**10**	**72**	**108**				**0**	**1486**
18:00	**0**	**413**	**108**	**521**	**147**	**699**	**0**	**846**	**24**	**5**	**101**	**130**				**0**	**1497**
18:15	0	385	98	483	132	640	0	772	21	7	81	109				0	1364
18:30	0	387	104	491	167	663	0	830	19	2	54	75				0	1396
18:45	0	346	118	464	144	625	0	769	27	0	82	109				0	1342
19:00	0	301	116	417	121	538	0	659	24	0	74	98				0	1174
19:15				0				0				0				0	0
19:30				0				0				0				0	0
19:45				0				0				0				0	0
20:00				0				0				0				0	0
20:15				0				0				0				0	0
20:30				0				0				0				0	0
20:45				0				0				0				0	0
21:00				0				0				0				0	0
TOTAL	**0**	**9757**	**3387**	**13144**	**2487**	**11401**	**0**	**13888**	**581**	**86**	**1815**	**2482**	**0**	**0**	**0**	**0**	**29514**
AM Peak Vol	0	1982	778	2760	212	1393	0	1605	123	12	394	529	0	0	0	0	4894
PM Peak Vol	0	1581	488	2069	683	2930	0	3613	91	30	327	448	0	0	0	0	6130

Maryland State Highway Administration
Highway Information Services Division
Turning Counts Study - Field Sheet

Request No.:
Job No.:

Location: MD 187 at I-270 Ramps (North Traffic Light)
Date: 9/27/2011 Tuesday
Recorder: LS/MO
Interval (dd) : 15
(In Minutes)

County: Montgomery
Town: North Bethesda
Weather: Cloudy

PEAK HOURS	AM PERIOD 6:00AM-12:00PM	Start	End	Volume	PM PERIOD 12:00PM-7:00PM	Start	End	Volume
		07:45	08:45	**4894**		17:00	18:00	**6130**

PEDESTRIAN SCHOOL CHILDREN & U-TURN BREAKDOWN

Hour	MD 187			MD 187			I-270 Ramps			I-270 Ramps		
Ending	S.C.	PED.	U.T.	S.C.	PED.	U.T.	S.C.	PED.	U.T.	S.C.	PED.	U.T.
00:15												
00:30												
00:45												
01:00												
01:15												
01:30												
01:45												
02:00												
02:15												
02:30												
02:45												
03:00												
03:15												
03:30												
03:45												
04:00												
04:15												
04:30												
04:45												
05:00												
05:15												
05:30												
05:45												
06:00												
06:15												
06:30												
06:45												
07:00												
07:15												
07:30												
07:45												
08:00												
08:15												
08:30												
08:45												
09:00												
09:15												
09:30												
09:45												
10:00												
10:15												
10:30												
10:45												
11:00												
11:15												
11:30												
11:45												
12:00												
12:15												
12:30												
12:45												
13:00												
13:15												
13:30												
13:45												
14:00												
14:15												
14:30												
14:45												
15:00												
15:15												
15:30												
15:45												
16:00												
16:15												
16:30												
16:45												
17:00												
17:15												
17:30												
17:45												
18:00												
18:15												
18:30												
18:45												
19:00												
19:15												
19:30												
19:45												
20:00												
20:15												
20:30												
20:45												
21:00												
TOTAL	**0**	**0**	**0**	**0**	**0**	**0**	**0**	**0**	**0**	**0**	**0**	**0**
AM Peak Vol	0	0	0	0	0	0	0	0	0	0	0	0
PM Peak Vol	0	0	0	0	0	0	0	0	0	0	0	0

Maryland State Highway Administration
Highway Information Services Division
Turning Counts Study - Field Sheet

Request No.:
Job No.:

Location: MD 187 at I-270 Ramps (North Traffic Light)
Date: 9/27/2011 Tuesday
Recorder: LS/MO
Interval (dd) : 15
(In Minutes)

County: Montgomery
Town: North Bethesda
Weather: Cloudy

PEAK HOURS	AM PERIOD 6:00AM-12:00PM	Start	End	Volume	PM PERIOD 12:00PM-7:00PM	Start	End	Volume
		07:45	08:45	4894		17:00	18:00	6130

Turning Movement Summary:

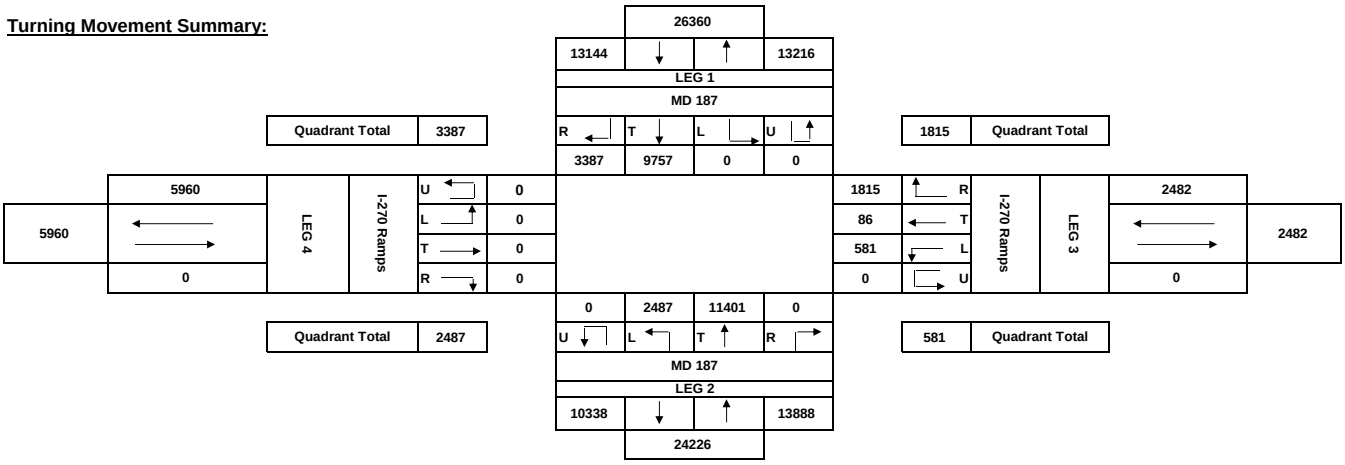

Comments:

AM Peak Hour :

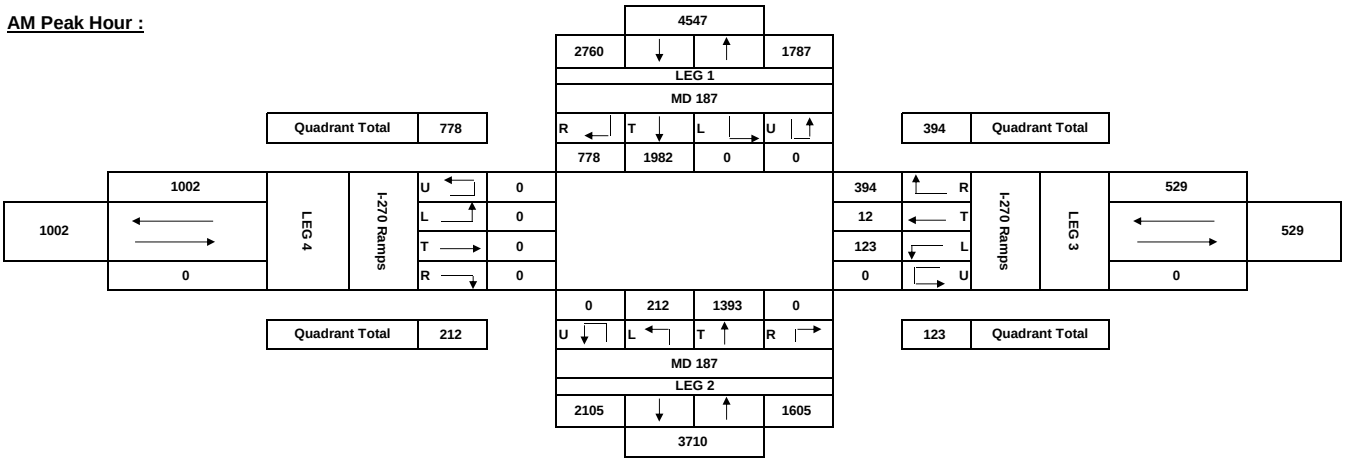

PM Peak Hour :

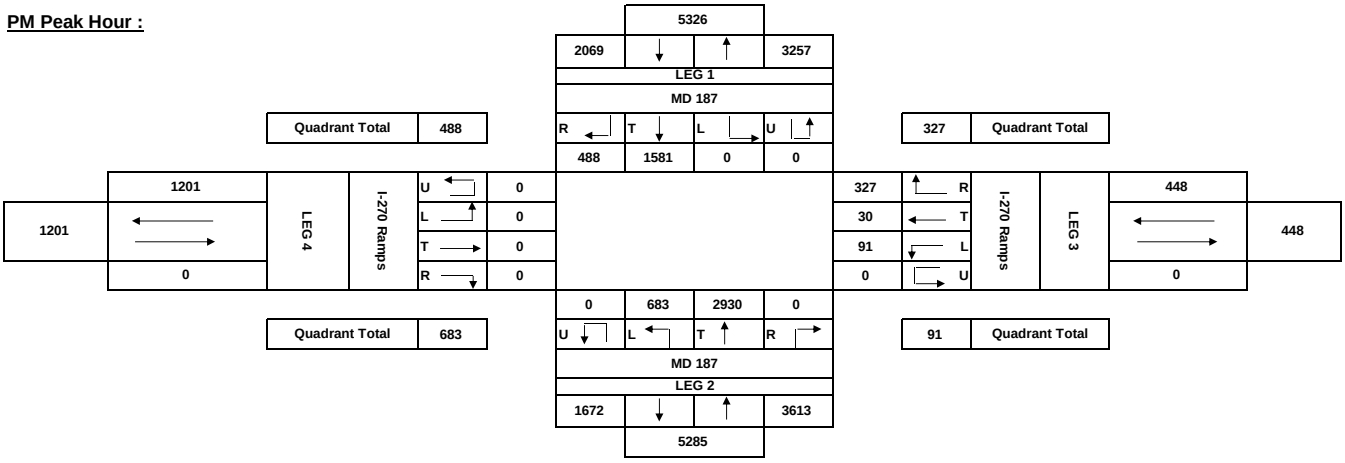

Maryland State Highway Administration
Highway Information Services Division
Turning Counts Study - Field Sheet

Request No.:
Job No.:

Location: MD 187 and Poindexter Ln/Edson Ln
Date: 9/20/2011 Tuesday
Recorder: LS/MO
Interval (dd) : 15
(In Minutes)

County: Montgomery
Town: North Bethesda
Weather: Cloudy

PEAK HOURS	AM PERIOD 6:00AM-12:00PM	Start	End	Volume	PM PERIOD 12:00PM-7:00PM	Start	End	Volume
		07:30	08:30	3631		17:00	18:00	4232

Street Name-->	MD 187				MD 187				Edson Ln				Poindexter Ln				
HOUR	From North				From South				From East				From West				GRAND
ENDING	L	T	R	TOT	L	T	R	TOT	L	T	R	TOT	L	T	R	TOT	TOTAL
00:15				0				0				0				0	0
00:30				0				0				0				0	0
00:45				0				0				0				0	0
01:00				0				0				0				0	0
01:15				0				0				0				0	0
01:30				0				0				0				0	0
01:45				0				0				0				0	0
02:00				0				0				0				0	0
02:15				0				0				0				0	0
02:30				0				0				0				0	0
02:45				0				0				0				0	0
03:00				0				0				0				0	0
03:15				0				0				0				0	0
03:30				0				0				0				0	0
03:45				0				0				0				0	0
04:00				0				0				0				0	0
04:15				0				0				0				0	0
04:30				0				0				0				0	0
04:45				0				0				0				0	0
05:00				0				0				0				0	0
05:15				0				0				0				0	0
05:30				0				0				0				0	0
05:45				0				0				0				0	0
06:00				0				0				0				0	0
06:15				0				0				0				0	0
06:30				0				0				0				0	0
06:45	5	241	1	247	0	118	18	136	21	1	4	26	1	0	1	2	411
07:00	8	418	3	429	3	150	17	170	36	0	4	40	0	0	3	3	642
07:15	7	500	1	508	5	208	20	233	37	0	1	38	2	0	5	7	786
07:30	5	436	3	444	14	267	42	323	44	0	3	47	4	0	9	13	827
07:45	**13**	**499**	**4**	**516**	**23**	**331**	**48**	**402**	**37**	**0**	**9**	**46**	**3**	**0**	**3**	**6**	**970**
08:00	**17**	**464**	**5**	**486**	**10**	**295**	**35**	**340**	**36**	**0**	**11**	**47**	**0**	**0**	**2**	**2**	**875**
08:15	**11**	**502**	**9**	**522**	**6**	**314**	**24**	**344**	**39**	**0**	**11**	**50**	**3**	**0**	**2**	**5**	**921**
08:30	**18**	**436**	**12**	**466**	**4**	**313**	**34**	**351**	**34**	**0**	**14**	**48**	**0**	**0**	**0**	**0**	**865**
08:45	19	456	11	486	12	377	41	430	40	0	9	49	2	0	2	4	969
09:00	16	362	21	399	6	300	51	357	35	1	14	50	9	0	3	12	818
09:15	39	347	12	398	3	309	38	350	25	0	8	33	9	1	5	15	796
09:30	21	387	7	415	3	290	61	354	24	1	5	30	4	0	3	7	806
09:45				0				0				0				0	0
10:00				0				0				0				0	0
10:15				0				0				0				0	0
10:30				0				0				0				0	0
10:45				0				0				0				0	0
11:00				0				0				0				0	0
11:15				0				0				0				0	0
11:30				0				0				0				0	0
11:45				0				0				0				0	0
12:00				0				0				0				0	0
12:15				0				0				0				0	0
12:30				0				0				0				0	0
12:45				0				0				0				0	0
13:00				0				0				0				0	0
13:15				0				0				0				0	0
13:30				0				0				0				0	0
13:45				0				0				0				0	0
14:00				0				0				0				0	0
14:15				0				0				0				0	0
14:30				0				0				0				0	0
14:45				0				0				0				0	0
15:00				0				0				0				0	0
15:15				0				0				0				0	0
15:30				0				0				0				0	0
15:45				0				0				0				0	0
16:00				0				0				0				0	0
16:15	11	405	5	421	6	436	47	489	56	0	7	63	5	0	2	7	980
16:30	13	391	4	408	14	408	51	473	35	0	7	42	4	0	0	4	927
16:45	14	430	4	448	10	444	38	492	49	0	7	56	1	0	3	4	1000
17:00	14	404	7	425	9	504	54	567	36	0	4	40	3	0	1	4	1036
17:15	**13**	**391**	**3**	**407**	**11**	**492**	**47**	**550**	**65**	**0**	**11**	**76**	**3**	**0**	**1**	**4**	**1037**
17:30	**14**	**422**	**4**	**440**	**9**	**531**	**65**	**605**	**67**	**0**	**2**	**69**	**2**	**0**	**6**	**8**	**1122**
17:45	**11**	**389**	**4**	**404**	**20**	**485**	**53**	**558**	**48**	**0**	**5**	**53**	**7**	**0**	**0**	**7**	**1022**
18:00	**6**	**396**	**8**	**410**	**6**	**504**	**59**	**569**	**64**	**0**	**6**	**70**	**0**	**0**	**2**	**2**	**1051**
18:15	12	408	7	427	12	413	52	477	67	0	5	72	1	0	3	4	980
18:30	12	353	2	367	9	414	54	477	44	0	9	53	0	0	3	3	900
18:45	8	319	2	329	12	361	56	429	38	0	6	44	0	0	1	1	803
19:00	9	297	4	310	11	351	62	424	37	0	11	48	1	0	2	3	785
19:15				0				0				0				0	0
19:30				0				0				0				0	0
19:45				0				0				0				0	0
20:00				0				0				0				0	0
20:15				0				0				0				0	0
20:30				0				0				0				0	0
20:45				0				0				0				0	0
21:00				0				0				0				0	0
TOTAL	**316**	**9653**	**143**	**10112**	**218**	**8615**	**1067**	**9900**	**1014**	**3**	**173**	**1190**	**64**	**1**	**62**	**127**	**21329**
AM Peak Vol	59	1901	30	1990	43	1253	141	1437	146	0	45	191	6	0	7	13	3631
PM Peak Vol	44	1598	19	1661	46	2012	224	2282	244	0	24	268	12	0	9	21	4232

Maryland State Highway Administration
Highway Information Services Division
Turning Counts Study - Field Sheet

Request No.:
Job No.:

Location: MD 187 and Poindexter Ln/Edson Ln
Date: 9/20/2011 Tuesday
Recorder: LS/MO
Interval (dd) : 15
(In Minutes)

County: Montgomery
Town: North Bethesda
Weather: Cloudy

PEAK HOURS	AM PERIOD 6:00AM-12:00PM	Start	End	Volume	PM PERIOD 12:00PM-7:00PM	Start	End	Volume
		07:30	08:30	**3631**		17:00	18:00	**4232**

PEDESTRIAN SCHOOL CHILDREN & U-TURN BREAKDOWN

Hour	MD 187			MD 187			Edson Ln			Poindexter Ln		
Ending	S.C.	PED.	U.T.	S.C.	PED.	U.T.	S.C.	PED.	U.T.	S.C.	PED.	U.T.
00:15												
00:30												
00:45												
01:00												
01:15												
01:30												
01:45												
02:00												
02:15												
02:30												
02:45												
03:00												
03:15												
03:30												
03:45												
04:00												
04:15												
04:30												
04:45												
05:00												
05:15												
05:30												
05:45												
06:00												
06:15												
06:30												
06:45												
07:00												
07:15												
07:30												
07:45												
08:00												
08:15												
08:30												
08:45												
09:00												
09:15												
09:30												
09:45												
10:00												
10:15												
10:30												
10:45												
11:00												
11:15												
11:30												
11:45												
12:00												
12:15												
12:30												
12:45												
13:00												
13:15												
13:30												
13:45												
14:00												
14:15												
14:30												
14:45												
15:00												
15:15												
15:30												
15:45												
16:00												
16:15												
16:30												
16:45												
17:00												
17:15												
17:30												
17:45												
18:00												
18:15												
18:30												
18:45												
19:00												
19:15												
19:30												
19:45												
20:00												
20:15												
20:30												
20:45												
21:00												
TOTAL	**0**	**0**	**0**	**0**	**0**	**0**	**0**	**0**	**0**	**0**	**0**	**0**
AM Peak Vol	0	0	0	0	0	0	0	0	0	0	0	0
PM Peak Vol	0	0	0	0	0	0	0	0	0	0	0	0

Maryland State Highway Administration
Highway Information Services Division
Turning Counts Study - Field Sheet

Request No.:
Job No.:

Location: MD 187 and Poindexter Ln/Edson Ln
Date: 9/20/2011 Tuesday
Recorder: LS/MO
Interval (dd) : 15
(In Minutes)

County: Montgomery
Town: North Bethesda
Weather: Cloudy

PEAK HOURS	AM PERIOD 6:00AM-12:00PM	Start	End	Volume	PM PERIOD 12:00PM-7:00PM	Start	End	Volume
		07:30	08:30	3631		17:00	18:00	4232

Turning Movement Summary:

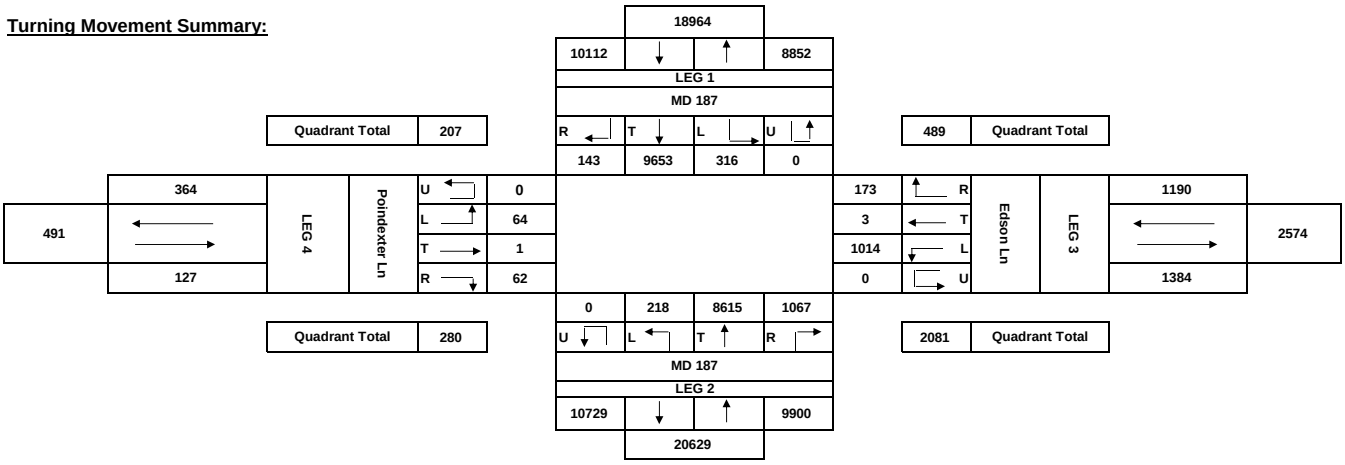

Comments:

AM Peak Hour :

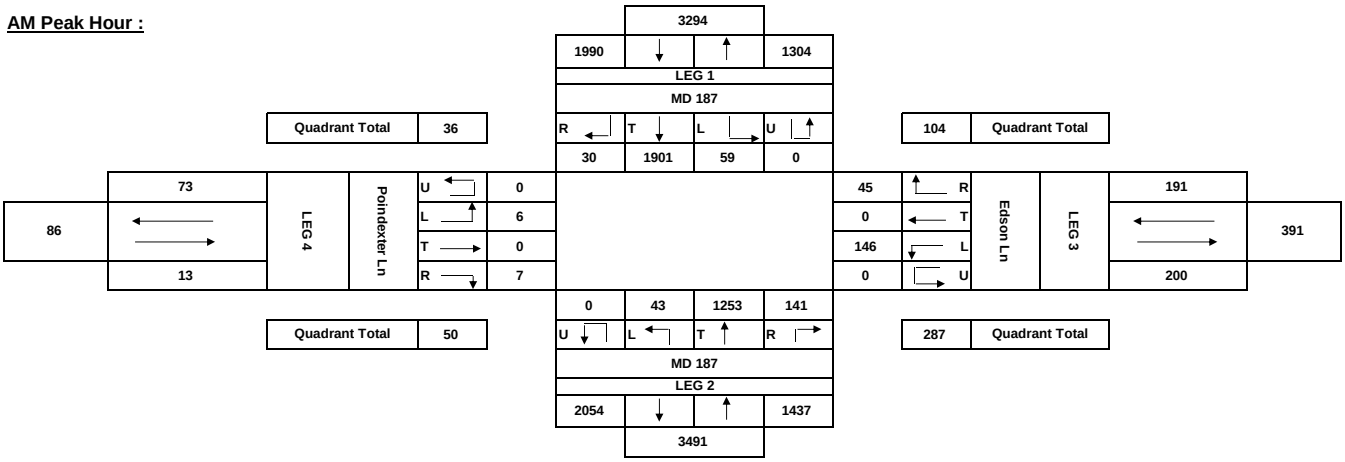

PM Peak Hour :

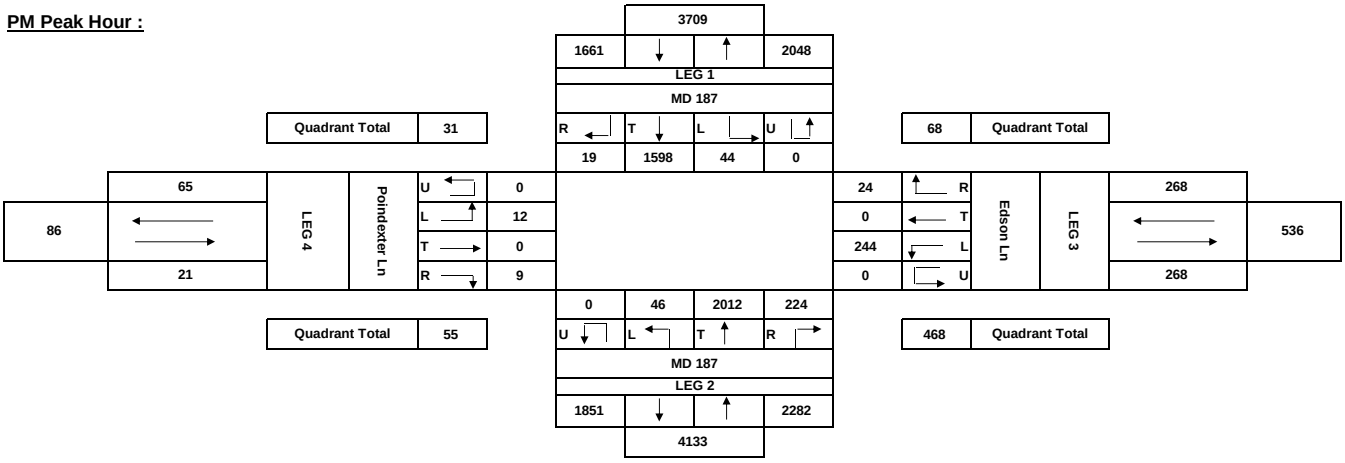

Maryland State Highway Administration
Highway Information Services Division
Turning Counts Study - Field Sheet

Request No.:
Job No.:

Location: MD 187 and Tuckerman Ln
Date: 9/13/2011 Tuesday
Recorder: AM/LS
Interval (dd) : 15
(In Minutes)

County: Montgomery
Town: North Bethesda
Weather: Clear

PEAK HOURS	AM PERIOD 6:00AM-12:00PM	Start	End	Volume	PM PERIOD 12:00PM-7:00PM	Start	End	Volume
		07:30	08:30	5835		17:15	18:15	6713

Street Name-->	MD 187				MD 187				Tuckerman Ln				Tuckerman Ln				
HOUR	From North				From South				From East				From West				GRAND
ENDING	L	T	R	TOT	L	T	R	TOT	L	T	R	TOT	L	T	R	TOT	TOTAL
00:15				0				0				0				0	0
00:30				0				0				0				0	0
00:45				0				0				0				0	0
01:00				0				0				0				0	0
01:15				0				0				0				0	0
01:30				0				0				0				0	0
01:45				0				0				0				0	0
02:00				0				0				0				0	0
02:15				0				0				0				0	0
02:30				0				0				0				0	0
02:45				0				0				0				0	0
03:00				0				0				0				0	0
03:15				0				0				0				0	0
03:30				0				0				0				0	0
03:45				0				0				0				0	0
04:00				0				0				0				0	0
04:15				0				0				0				0	0
04:30				0				0				0				0	0
04:45				0				0				0				0	0
05:00				0				0				0				0	0
05:15				0				0				0				0	0
05:30				0				0				0				0	0
05:45				0				0				0				0	0
06:00				0				0				0				0	0
06:15				0				0				0				0	0
06:30				0				0				0				0	0
06:45	6	206	23	235	22	122	50	194	74	22	6	102	24	45	19	88	619
07:00	4	360	30	394	32	166	52	250	111	31	11	153	11	53	17	81	878
07:15	6	437	29	472	38	222	89	349	151	40	12	203	28	87	45	160	1184
07:30	16	439	27	482	30	302	127	459	143	53	18	214	39	111	37	187	1342
07:45	**15**	**447**	**34**	**496**	**41**	**301**	**97**	**439**	**148**	**78**	**45**	**271**	**59**	**119**	**23**	**201**	**1407**
08:00	**19**	**480**	**31**	**530**	**43**	**281**	**101**	**425**	**154**	**93**	**36**	**283**	**71**	**142**	**35**	**248**	**1486**
08:15	**22**	**484**	**26**	**532**	**47**	**290**	**97**	**434**	**162**	**88**	**22**	**272**	**42**	**142**	**33**	**217**	**1455**
08:30	**12**	**493**	**32**	**537**	**46**	**355**	**75**	**476**	**158**	**85**	**24**	**267**	**45**	**123**	**39**	**207**	**1487**
08:45	9	505	42	556	28	304	76	408	147	58	23	228	52	74	33	159	1351
09:00	13	486	48	547	33	359	68	460	138	51	22	211	55	62	35	152	1370
09:15	14	402	44	460	35	315	60	410	116	52	13	181	52	51	28	131	1182
09:30	8	278	20	306	24	238	52	314	58	21	17	96				0	716
09:45				0				0				0				0	0
10:00				0				0				0				0	0
10:15				0				0				0				0	0
10:30				0				0				0				0	0
10:45				0				0				0				0	0
11:00				0				0				0				0	0
11:15				0				0				0				0	0
11:30				0				0				0				0	0
11:45				0				0				0				0	0
12:00				0				0				0				0	0
12:15				0				0				0				0	0
12:30				0				0				0				0	0
12:45				0				0				0				0	0
13:00				0				0				0				0	0
13:15				0				0				0				0	0
13:30				0				0				0				0	0
13:45				0				0				0				0	0
14:00				0				0				0				0	0
14:15				0				0				0				0	0
14:30				0				0				0				0	0
14:45				0				0				0				0	0
15:00				0				0				0				0	0
15:15				0				0				0				0	0
15:30				0				0				0				0	0
15:45				0				0				0				0	0
16:00				0				0				0				0	0
16:15	13	369	67	449	61	446	127	634	85	54	14	153	74	48	32	154	1390
16:30	20	341	67	428	55	468	120	643	103	75	11	189	72	66	28	166	1426
16:45	20	410	69	499	60	441	133	634	90	81	22	193	71	68	27	166	1492
17:00	24	370	63	457	59	460	120	639	111	116	26	253	100	81	18	199	1548
17:15	24	370	47	441	69	499	157	725	108	98	28	234	80	60	29	169	1569
17:30	**24**	**394**	**57**	**475**	**94**	**601**	**221**	**916**	**123**	**114**	**34**	**271**	**87**	**93**	**27**	**207**	**1869**
17:45	**22**	**399**	**71**	**492**	**57**	**462**	**173**	**692**	**121**	**109**	**34**	**264**	**89**	**69**	**23**	**181**	**1629**
18:00	**26**	**367**	**64**	**457**	**70**	**484**	**180**	**734**	**115**	**129**	**25**	**269**	**74**	**88**	**13**	**175**	**1635**
18:15	**27**	**393**	**87**	**507**	**61**	**438**	**170**	**669**	**111**	**115**	**30**	**256**	**67**	**62**	**19**	**148**	**1580**
18:30	17	319	58	394	76	502	169	747	118	107	30	255	79	69	20	168	1564
18:45	19	295	54	368	80	528	161	769	98	122	29	249	56	55	26	137	1523
19:00	25	298	75	398	67	492	182	741	120	128	28	276	60	63	32	155	1570
19:15				0				0				0				0	0
19:30				0				0				0				0	0
19:45				0				0				0				0	0
20:00				0				0				0				0	0
20:15				0				0				0				0	0
20:30				0				0				0				0	0
20:45				0				0				0				0	0
21:00				0				0				0				0	0
TOTAL	**405**	**9342**	**1165**	**10912**	**1228**	**9076**	**2857**	**13161**	**2863**	**1920**	**560**	**5343**	**1387**	**1831**	**638**	**3856**	**33272**
AM Peak Vol	68	1904	123	2095	177	1227	370	1774	622	344	127	1093	217	526	130	873	5835
PM Peak Vol	99	1553	279	1931	282	1985	744	3011	470	467	123	1060	317	312	82	711	6713

Maryland State Highway Administration
Highway Information Services Division
Turning Counts Study - Field Sheet

Request No.:
Job No.:

Location: MD 187 and Tuckerman Ln
Date: 9/13/2011 Tuesday
Recorder: AM/LS
Interval (dd) : 15
(In Minutes)

County: Montgomery
Town: North Bethesda
Weather: Clear

PEAK HOURS	AM PERIOD 6:00AM-12:00PM	Start	End	Volume	PM PERIOD 12:00PM-7:00PM	Start	End	Volume
		07:30	08:30	**5835**		17:15	18:15	**6713**

PEDESTRIAN SCHOOL CHILDREN & U-TURN BREAKDOWN

Hour	MD 187			MD 187			Tuckerman Ln			Tuckerman Ln		
Ending	S.C.	PED.	U.T.	S.C.	PED.	U.T.	S.C.	PED.	U.T.	S.C.	PED.	U.T.
00:15												
00:30												
00:45												
01:00												
01:15												
01:30												
01:45												
02:00												
02:15												
02:30												
02:45												
03:00												
03:15												
03:30												
03:45												
04:00												
04:15												
04:30												
04:45												
05:00												
05:15												
05:30												
05:45												
06:00												
06:15												
06:30												
06:45						1						
07:00						0						
07:15						0						
07:30						2						
07:45						1						
08:00						1						
08:15						3						
08:30						0						
08:45						2						
09:00						1						
09:15						2						
09:30						2						
09:45												
10:00												
10:15												
10:30												
10:45												
11:00												
11:15												
11:30												
11:45												
12:00												
12:15												
12:30												
12:45												
13:00												
13:15												
13:30												
13:45												
14:00												
14:15												
14:30												
14:45												
15:00												
15:15												
15:30												
15:45												
16:00												
16:15						5						
16:30						2						
16:45						3						
17:00						3						
17:15						4						
17:30						3						
17:45						2						
18:00						3						
18:15						4						
18:30						1						
18:45						5						
19:00												
19:15												
19:30												
19:45												
20:00												
20:15												
20:30												
20:45												
21:00												
TOTAL	**0**	**0**	**0**	**0**	**0**	**50**	**0**	**0**	**0**	**0**	**0**	**0**
AM Peak Vol	0	0	0	0	0	5	0	0	0	0	0	0
PM Peak Vol	0	0	0	0	0	12	0	0	0	0	0	0

Maryland State Highway Administration
Highway Information Services Division
Turning Counts Study - Field Sheet

Request No.:
Job No.:

Location: MD 187 and Tuckerman Ln
Date: 9/13/2011 Tuesday
Recorder: AM/LS
Interval (dd) : 15
(In Minutes)

County: Montgomery
Town: North Bethesda
Weather: Clear

PEAK HOURS	AM PERIOD 6:00AM-12:00PM	Start	End	Volume	PM PERIOD 12:00PM-7:00PM	Start	End	Volume
		07:30	08:30	5835		17:15	18:15	6713

Turning Movement Summary:

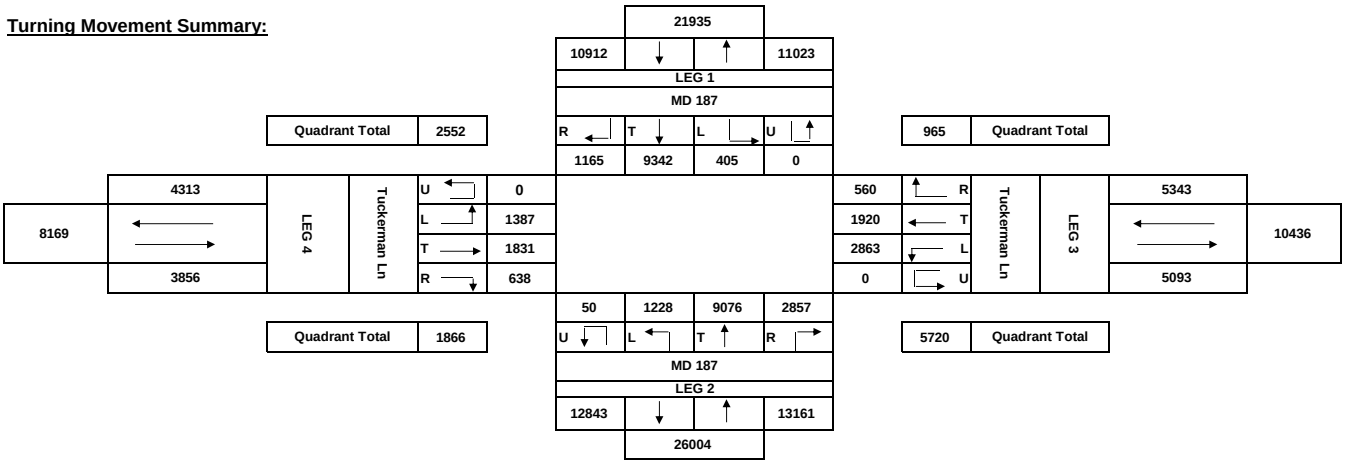

Comments:

AM Peak Hour :

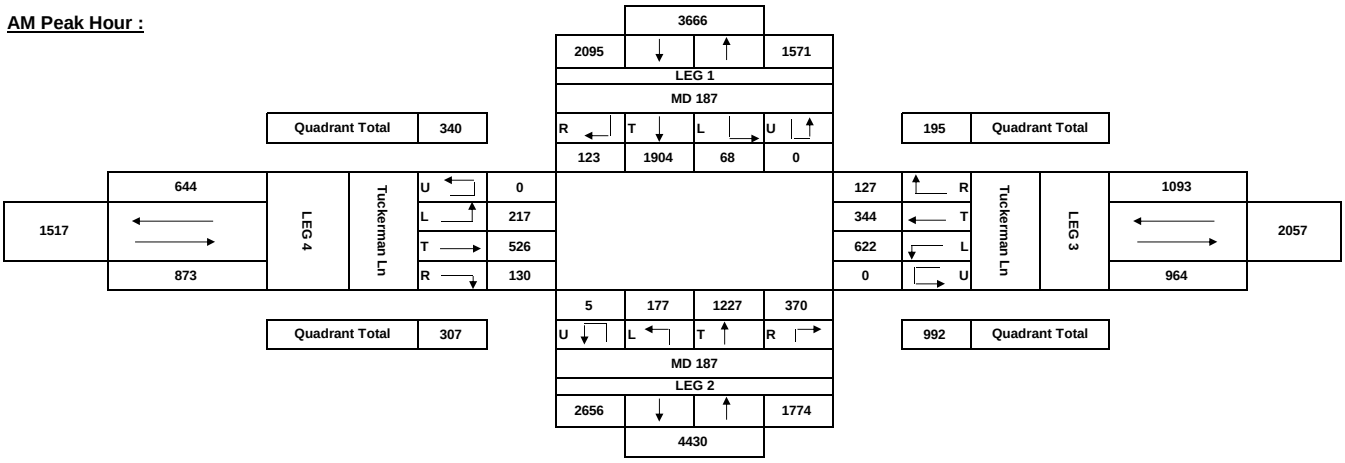

PM Peak Hour :

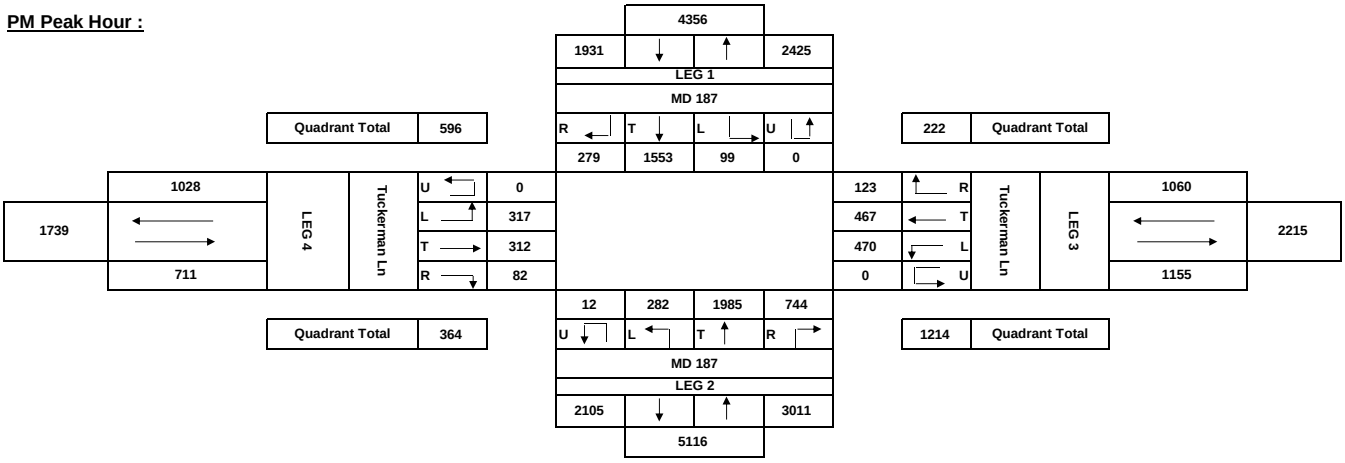

Maryland State Highway Administration
Highway Information Services Division
Turning Counts Study - Field Sheet

Request No.:
Job No.:

Location: MD 355 and Hoya St
Date: 9/28/2011 Wednesday
Recorder: LS/NT
Interval (dd) : 15
(In Minutes)

County: Montgomery
Town: North Bethesda
Weather: Rain/Clear

PEAK HOURS	AM PERIOD 6:00AM-12:00PM	Start	End	Volume	PM PERIOD 12:00PM-7:00PM	Start	End	Volume
		07:45	08:45	4313		17:30	18:30	4819

Street Name-->	MD 355				MD 355				Hoya St				Hoya St				
HOUR	From North				From South				From East				From West				GRAND
ENDING	L	T	R	TOT	L	T	R	TOT	L	T	R	TOT	L	T	R	TOT	TOTAL
00:15				0				0				0				0	0
00:30				0				0				0				0	0
00:45				0				0				0				0	0
01:00				0				0				0				0	0
01:15				0				0				0				0	0
01:30				0				0				0				0	0
01:45				0				0				0				0	0
02:00				0				0				0				0	0
02:15				0				0				0				0	0
02:30				0				0				0				0	0
02:45				0				0				0				0	0
03:00				0				0				0				0	0
03:15				0				0				0				0	0
03:30				0				0				0				0	0
03:45				0				0				0				0	0
04:00				0				0				0				0	0
04:15				0				0				0				0	0
04:30				0				0				0				0	0
04:45				0				0				0				0	0
05:00				0				0				0				0	0
05:15				0				0				0				0	0
05:30				0				0				0				0	0
05:45				0				0				0				0	0
06:00				0				0				0				0	0
06:15				0				0				0				0	0
06:30				0				0				0				0	0
06:45	0	340	27	367	2	107	0	109				0	0	0	24	24	500
07:00	0	385	39	424	3	123	0	126				0	0	0	33	33	583
07:15	0	495	35	530	7	170	0	177				0	0	0	47	47	754
07:30	0	549	41	590	3	187	0	190				0	0	0	44	44	824
07:45	0	582	54	636	10	221	0	231				0	0	0	51	51	918
08:00	**0**	**628**	**55**	**683**	**8**	**248**	**0**	**256**				**0**	**0**	**0**	**69**	**69**	**1008**
08:15	**0**	**664**	**63**	**727**	**7**	**292**	**0**	**299**				**0**	**0**	**0**	**74**	**74**	**1100**
08:30	**0**	**638**	**77**	**715**	**9**	**314**	**0**	**323**				**0**	**0**	**0**	**77**	**77**	**1115**
08:45	**0**	**623**	**68**	**691**	**6**	**321**	**0**	**327**				**0**	**0**	**0**	**72**	**72**	**1090**
09:00	0	527	54	581	7	294	0	301				0	0	0	63	63	945
09:15	0	518	47	565	7	212	0	219				0	0	0	58	58	842
09:30	0	426	38	464	5	157	0	162				0	0	0	51	51	677
09:45				0				0				0				0	0
10:00				0				0				0				0	0
10:15				0				0				0				0	0
10:30				0				0				0				0	0
10:45				0				0				0				0	0
11:00				0				0				0				0	0
11:15				0				0				0				0	0
11:30				0				0				0				0	0
11:45				0				0				0				0	0
12:00				0				0				0				0	0
12:15				0				0				0				0	0
12:30				0				0				0				0	0
12:45				0				0				0				0	0
13:00				0				0				0				0	0
13:15				0				0				0				0	0
13:30				0				0				0				0	0
13:45				0				0				0				0	0
14:00				0				0				0				0	0
14:15				0				0				0				0	0
14:30				0				0				0				0	0
14:45				0				0				0				0	0
15:00				0				0				0				0	0
15:15				0				0				0				0	0
15:30				0				0				0				0	0
15:45				0				0				0				0	0
16:00				0				0				0				0	0
16:15	0	398	81	479	0	658	0	658				0	0	0	41	41	1178
16:30	0	387	78	465	0	639	0	639				0	0	0	43	43	1147
16:45	0	391	86	477	0	616	0	616				0	0	0	39	39	1132
17:00	0	397	84	481	0	601	0	601				0	0	0	38	38	1120
17:15	0	404	78	482	0	626	0	626				0	0	0	42	42	1150
17:30	0	420	78	498	0	647	0	647				0	0	0	66	66	1211
17:45	**0**	**409**	**102**	**511**	**0**	**651**	**0**	**651**				**0**	**0**	**0**	**54**	**54**	**1216**
18:00	**0**	**410**	**86**	**496**	**0**	**666**	**0**	**666**				**0**	**0**	**0**	**34**	**34**	**1196**
18:15	**0**	**412**	**78**	**490**	**0**	**635**	**0**	**635**				**0**	**0**	**0**	**54**	**54**	**1179**
18:30	**0**	**403**	**91**	**494**	**0**	**683**	**0**	**683**				**0**	**0**	**0**	**51**	**51**	**1228**
18:45	0	412	83	495	0	613	0	613				0	0	0	42	42	1150
19:00	0	387	80	467	0	551	0	551				0	0	0	40	40	1058
19:15				0				0				0				0	0
19:30				0				0				0				0	0
19:45				0				0				0				0	0
20:00				0				0				0				0	0
20:15				0				0				0				0	0
20:30				0				0				0				0	0
20:45				0				0				0				0	0
21:00				0				0				0				0	0
TOTAL	**0**	**11205**	**1603**	**12808**	**74**	**10232**	**0**	**10306**	**0**	**0**	**0**	**0**	**0**	**0**	**1207**	**1207**	**24321**
AM Peak Vol	0	2553	263	2816	30	1175	0	1205	0	0	0	0	0	0	292	292	4313
PM Peak Vol	0	1634	357	1991	0	2635	0	2635	0	0	0	0	0	0	193	193	4819

Maryland State Highway Administration
Highway Information Services Division
Turning Counts Study - Field Sheet

Request No.:
Job No.:

Location: MD 355 and Hoya St
Date: 9/28/2011 Wednesday
Recorder: LS/NT
Interval (dd) : 15
(In Minutes)

County: Montgomery
Town: North Bethesda
Weather: Rain/Clear

PEAK HOURS	AM PERIOD 6:00AM-12:00PM	Start	End	Volume	PM PERIOD 12:00PM-7:00PM	Start	End	Volume
		07:45	08:45	**4313**		17:30	18:30	**4819**

PEDESTRIAN SCHOOL CHILDREN & U-TURN BREAKDOWN

Hour	MD 355			MD 355			Hoya St			Hoya St		
Ending	S.C.	PED.	U.T.	S.C.	PED.	U.T.	S.C.	PED.	U.T.	S.C.	PED.	U.T.
00:15												
00:30												
00:45												
01:00												
01:15												
01:30												
01:45												
02:00												
02:15												
02:30												
02:45												
03:00												
03:15												
03:30												
03:45												
04:00												
04:15												
04:30												
04:45												
05:00												
05:15												
05:30												
05:45												
06:00												
06:15												
06:30												
06:45												
07:00												
07:15												
07:30												
07:45												
08:00												
08:15												
08:30												
08:45												
09:00												
09:15												
09:30												
09:45												
10:00												
10:15												
10:30												
10:45												
11:00												
11:15												
11:30												
11:45												
12:00												
12:15												
12:30												
12:45												
13:00												
13:15												
13:30												
13:45												
14:00												
14:15												
14:30												
14:45												
15:00												
15:15												
15:30												
15:45												
16:00												
16:15												
16:30												
16:45												
17:00												
17:15												
17:30												
17:45												
18:00												
18:15												
18:30												
18:45												
19:00												
19:15												
19:30												
19:45												
20:00												
20:15												
20:30												
20:45												
21:00												
TOTAL	**0**	**0**	**0**	**0**	**0**	**0**	**0**	**0**	**0**	**0**	**0**	**0**
AM Peak Vol	0	0	0	0	0	0	0	0	0	0	0	0
PM Peak Vol	0	0	0	0	0	0	0	0	0	0	0	0

Maryland State Highway Administration
Highway Information Services Division
Turning Counts Study - Field Sheet

Request No.:
Job No.:

Location: MD 355 and Hoya St
Date: 9/28/2011 Wednesday
Recorder: LS/NT
Interval (dd) : 15
(In Minutes)

County: Montgomery
Town: North Bethesda
Weather: Rain/Clear

PEAK HOURS	AM PERIOD 6:00AM-12:00PM	Start	End	Volume	PM PERIOD 12:00PM-7:00PM	Start	End	Volume
		07:45	08:45	4313		17:30	18:30	4819

Turning Movement Summary:

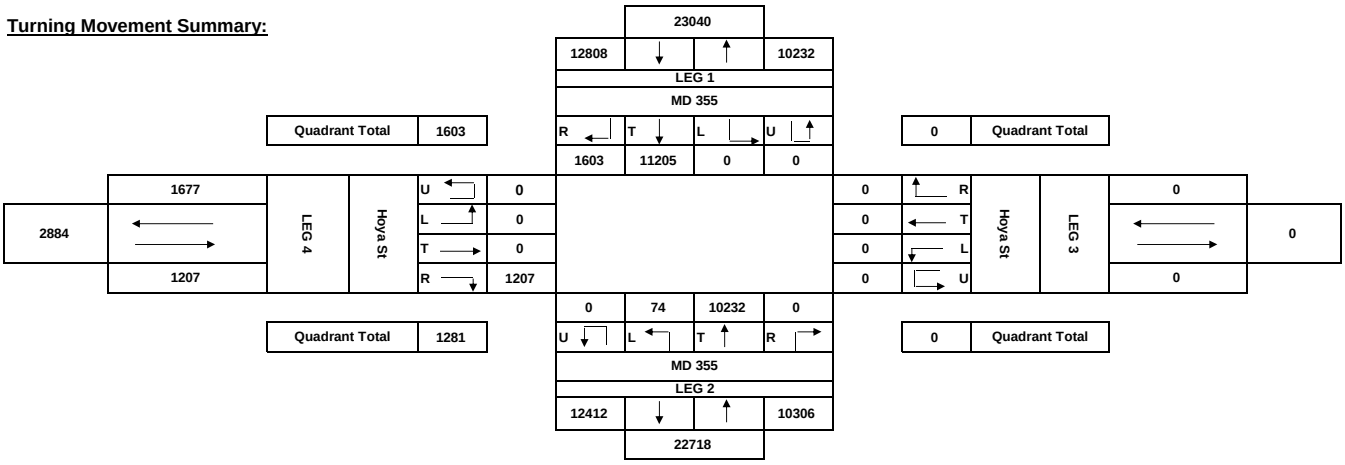

Comments:

AM Peak Hour :

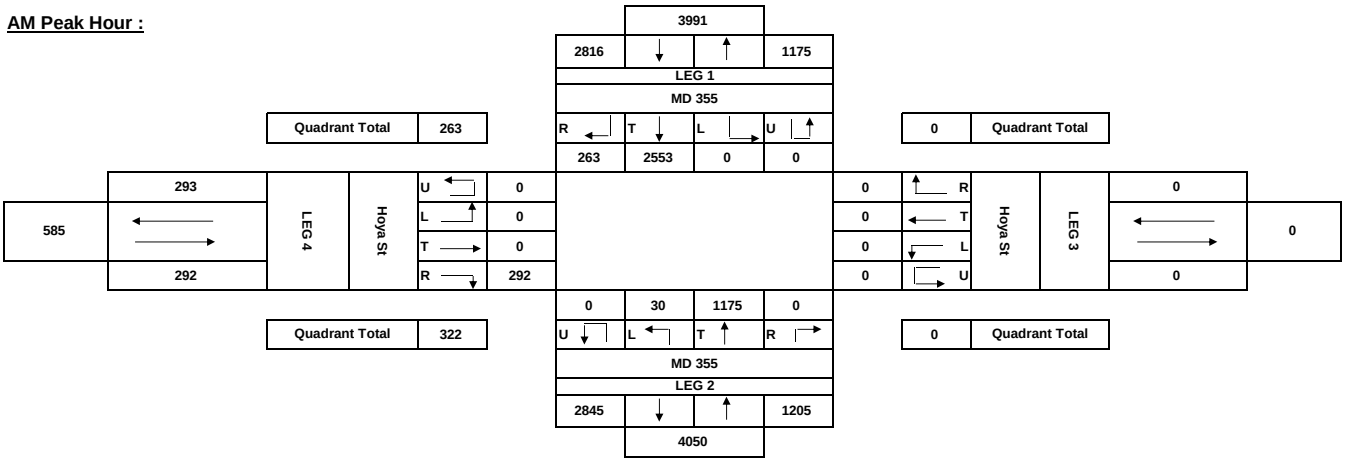

PM Peak Hour :

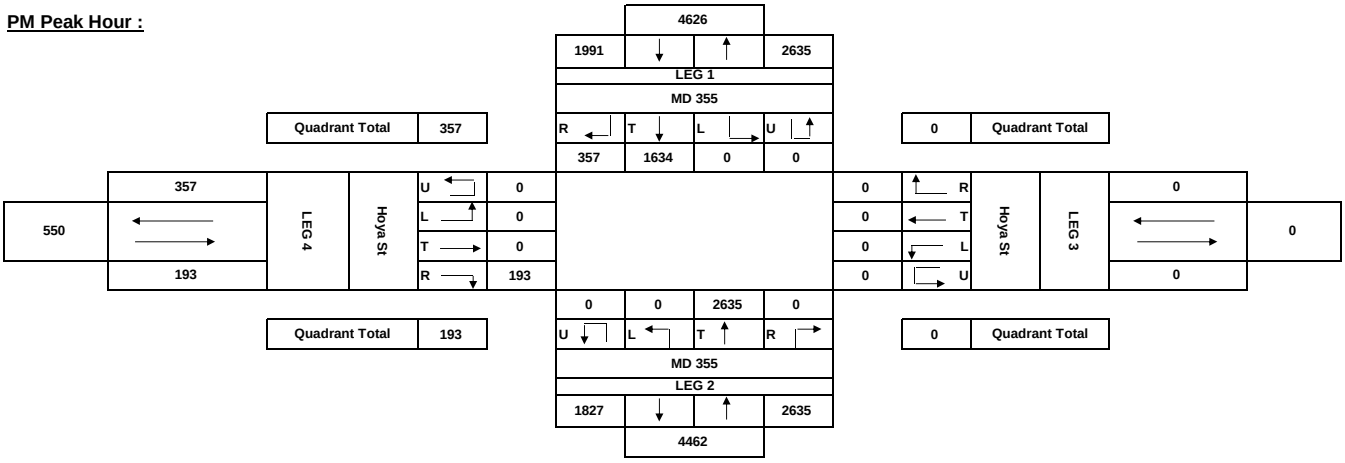

Maryland State Highway Administration
Highway Information Services Division
Turning Counts Study - Field Sheet

Request No.:
Job No.:

Location: MD 355 and Twinbrook Pkwy/Rollins Ave
Date: 9/21/2011 Wednesday
Recorder: AM/LS
Interval (dd) : 15
(In Minutes)

County: Montgomery
Town: North Bethesda
Weather: Cloudy

PEAK HOURS	AM PERIOD 6:00AM-12:00PM	Start	End	Volume	PM PERIOD 12:00PM-7:00PM	Start	End	Volume
		08:00	09:00	3862		17:00	18:00	4804

Street Name-->	MD 355				MD 355				Twinbrook Pkwy				Rollins Ave				
HOUR	From North				From South				From East				From West				GRAND
ENDING	L	T	R	TOT	L	T	R	TOT	L	T	R	TOT	L	T	R	TOT	TOTAL
00:15				0				0				0				0	0
00:30				0				0				0				0	0
00:45				0				0				0				0	0
01:00				0				0				0				0	0
01:15				0				0				0				0	0
01:30				0				0				0				0	0
01:45				0				0				0				0	0
02:00				0				0				0				0	0
02:15				0				0				0				0	0
02:30				0				0				0				0	0
02:45				0				0				0				0	0
03:00				0				0				0				0	0
03:15				0				0				0				0	0
03:30				0				0				0				0	0
03:45				0				0				0				0	0
04:00				0				0				0				0	0
04:15				0				0				0				0	0
04:30				0				0				0				0	0
04:45				0				0				0				0	0
05:00				0				0				0				0	0
05:15				0				0				0				0	0
05:30				0				0				0				0	0
05:45				0				0				0				0	0
06:00				0				0				0				0	0
06:15				0				0				0				0	0
06:30				0				0				0				0	0
06:45	26	253	2	281	2	58	12	72	0	37	6	43	0	27	7	34	430
07:00	46	366	2	414	3	80	14	97	1	48	8	57	1	41	7	49	617
07:15	35	441	9	485	5	101	19	125	0	49	5	54	0	40	10	50	714
07:30	47	457	4	508	3	119	24	146	0	64	8	72	0	52	7	59	785
07:45	56	515	8	579	14	140	10	164	0	62	14	76	0	42	6	48	867
08:00	38	470	12	520	12	179	27	218	0	110	16	126	1	60	9	70	934
08:15	**50**	**456**	**8**	**514**	**13**	**185**	**26**	**224**	**0**	**88**	**19**	**107**	**0**	**79**	**19**	**98**	**943**
08:30	**44**	**468**	**12**	**524**	**10**	**219**	**39**	**268**	**0**	**67**	**22**	**89**	**0**	**75**	**15**	**90**	**971**
08:45	**37**	**459**	**9**	**505**	**16**	**234**	**25**	**275**	**0**	**104**	**32**	**136**	**0**	**59**	**21**	**80**	**996**
09:00	**63**	**435**	**12**	**510**	**6**	**209**	**26**	**241**	**0**	**82**	**26**	**108**	**0**	**79**	**14**	**93**	**952**
09:15	47	396	16	459	19	208	29	256	0	95	20	115	0	88	19	107	937
09:30	51	399	16	466	16	218	32	266	0	86	29	115	1	76	19	96	943
09:45				0				0				0				0	0
10:00				0				0				0				0	0
10:15				0				0				0				0	0
10:30				0				0				0				0	0
10:45				0				0				0				0	0
11:00				0				0				0				0	0
11:15				0				0				0				0	0
11:30				0				0				0				0	0
11:45				0				0				0				0	0
12:00				0				0				0				0	0
12:15				0				0				0				0	0
12:30				0				0				0				0	0
12:45				0				0				0				0	0
13:00				0				0				0				0	0
13:15				0				0				0				0	0
13:30				0				0				0				0	0
13:45				0				0				0				0	0
14:00				0				0				0				0	0
14:15				0				0				0				0	0
14:30				0				0				0				0	0
14:45				0				0				0				0	0
15:00				0				0				0				0	0
15:15				0				0				0				0	0
15:30				0				0				0				0	0
15:45				0				0				0				0	0
16:00				0				0				0				0	0
16:15	35	348	22	405	19	384	29	432	1	79	29	109	0	97	25	122	1068
16:30	51	358	24	433	35	400	47	482	0	106	37	143	0	105	22	127	1185
16:45	51	316	24	391	24	429	43	496	0	103	30	133	0	83	24	107	1127
17:00	40	323	22	385	24	407	45	476	0	112	34	146	1	93	13	107	1114
17:15	**52**	**331**	**12**	**395**	**20**	**487**	**32**	**539**	**1**	**105**	**49**	**155**	**0**	**106**	**24**	**130**	**1219**
17:30	**56**	**385**	**17**	**458**	**28**	**479**	**38**	**545**	**0**	**73**	**49**	**122**	**1**	**111**	**14**	**126**	**1251**
17:45	**56**	**372**	**7**	**435**	**19**	**417**	**51**	**487**	**0**	**81**	**46**	**127**	**0**	**97**	**7**	**104**	**1153**
18:00	**48**	**346**	**12**	**406**	**30**	**445**	**55**	**530**	**0**	**79**	**57**	**136**	**0**	**95**	**14**	**109**	**1181**
18:15	71	345	13	429	36	433	44	513	0	101	47	148	0	91	18	109	1199
18:30	52	342	18	412	30	446	48	524	1	99	32	132	0	88	22	110	1178
18:45	45	362	19	426	17	402	45	464	0	86	38	124	0	98	15	113	1127
19:00	39	321	11	371	21	380	34	435	0	69	23	92	2	78	15	95	993
19:15				0				0				0				0	0
19:30				0				0				0				0	0
19:45				0				0				0				0	0
20:00				0				0				0				0	0
20:15				0				0				0				0	0
20:30				0				0				0				0	0
20:45				0				0				0				0	0
21:00				0				0				0				0	0
TOTAL	**1136**	**9264**	**311**	**10711**	**422**	**7059**	**794**	**8275**	**4**	**1985**	**676**	**2665**	**7**	**1860**	**366**	**2233**	**23884**
AM Peak Vol	194	1818	41	2053	45	847	116	1008	0	341	99	440	0	292	69	361	3862
PM Peak Vol	212	1434	48	1694	97	1828	176	2101	1	338	201	540	1	409	59	469	4804

Maryland State Highway Administration
Highway Information Services Division
Turning Counts Study - Field Sheet

Request No.:
Job No.:

Location: MD 355 and Twinbrook Pkwy/Rollins Ave
Date: 9/21/2011 Wednesday
Recorder: AM/LS
Interval (dd) : 15
(In Minutes)

County: Montgomery
Town: North Bethesda
Weather: Cloudy

PEAK HOURS	AM PERIOD 6:00AM-12:00PM	Start	End	Volume	PM PERIOD 12:00PM-7:00PM	Start	End	Volume
		08:00	09:00	**3862**		17:00	18:00	**4804**

PEDESTRIAN SCHOOL CHILDREN & U-TURN BREAKDOWN

Hour	MD 355			MD 355			Twinbrook Pkwy			Rollins Ave		
Ending	S.C.	PED.	U.T.	S.C.	PED.	U.T.	S.C.	PED.	U.T.	S.C.	PED.	U.T.
00:15												
00:30												
00:45												
01:00												
01:15												
01:30												
01:45												
02:00												
02:15												
02:30												
02:45												
03:00												
03:15												
03:30												
03:45												
04:00												
04:15												
04:30												
04:45												
05:00												
05:15												
05:30												
05:45												
06:00												
06:15												
06:30												
06:45			0			0						
07:00			0			0						
07:15			1			0						
07:30			1			0						
07:45			0			0						
08:00			1			0						
08:15			1			1						
08:30			1			1						
08:45			1			2						
09:00			8			0						
09:15			5			1						
09:30			2			0						
09:45												
10:00												
10:15												
10:30												
10:45												
11:00												
11:15												
11:30												
11:45												
12:00												
12:15												
12:30												
12:45												
13:00												
13:15												
13:30												
13:45												
14:00												
14:15												
14:30												
14:45												
15:00												
15:15												
15:30												
15:45												
16:00												
16:15			6			2						
16:30			7			5						
16:45			10			1						
17:00			5			0						
17:15			8			0						
17:30			6			2						
17:45			5			6						
18:00			9			1						
18:15			0			5						
18:30			3			4						
18:45			5			4						
19:00			2			1						
19:15												
19:30												
19:45												
20:00												
20:15												
20:30												
20:45												
21:00												
TOTAL	**0**	**0**	**87**	**0**	**0**	**36**	**0**	**0**	**0**	**0**	**0**	**0**
AM Peak Vol	0	0	11	0	0	4	0	0	0	0	0	0
PM Peak Vol	0	0	28	0	0	9	0	0	0	0	0	0

Maryland State Highway Administration
Highway Information Services Division
Turning Counts Study - Field Sheet

Request No.:
Job No.:

Location: MD 355 and Twinbrook Pkwy/Rollins Ave
Date: 9/21/2011 Wednesday
Recorder: AM/LS
Interval (dd) : 15
(In Minutes)

County: Montgomery
Town: North Bethesda
Weather: Cloudy

PEAK HOURS	AM PERIOD 6:00AM-12:00PM	Start	End	Volume	PM PERIOD 12:00PM-7:00PM	Start	End	Volume
		08:00	09:00	3862		17:00	18:00	4804

Turning Movement Summary:

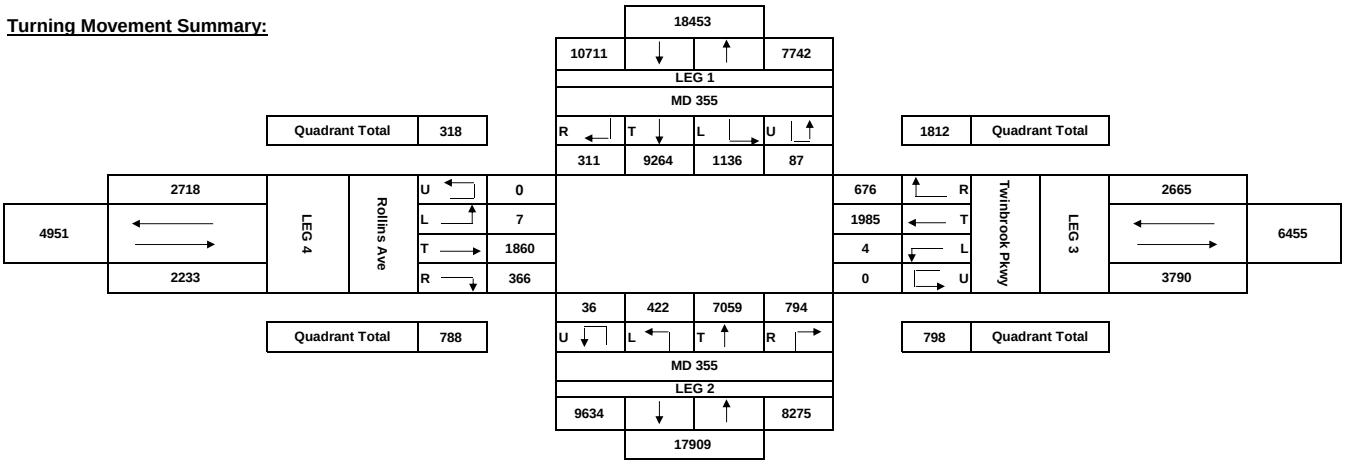

Comments:

AM Peak Hour :

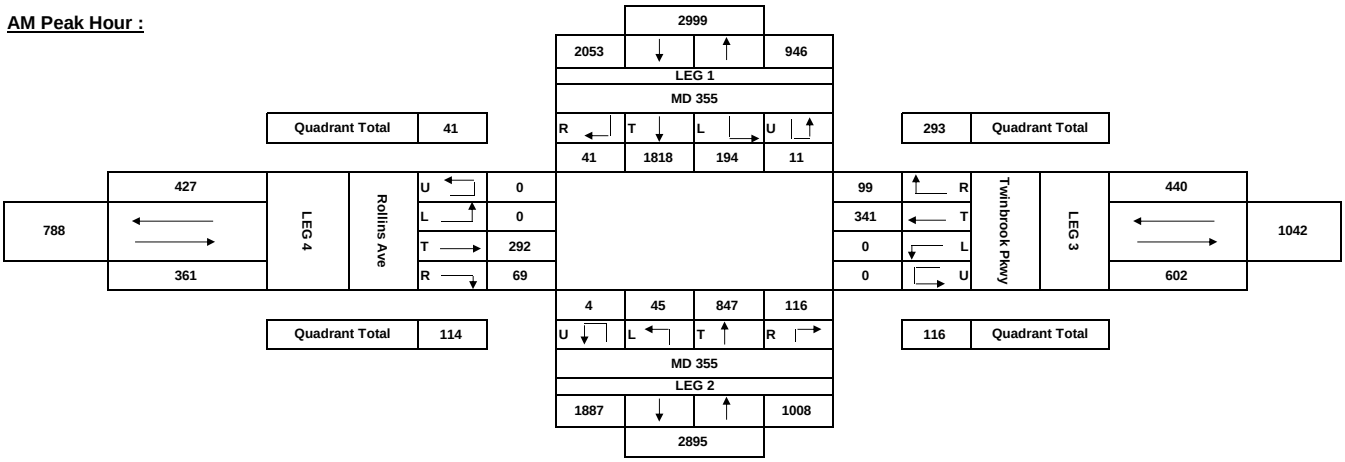

PM Peak Hour :

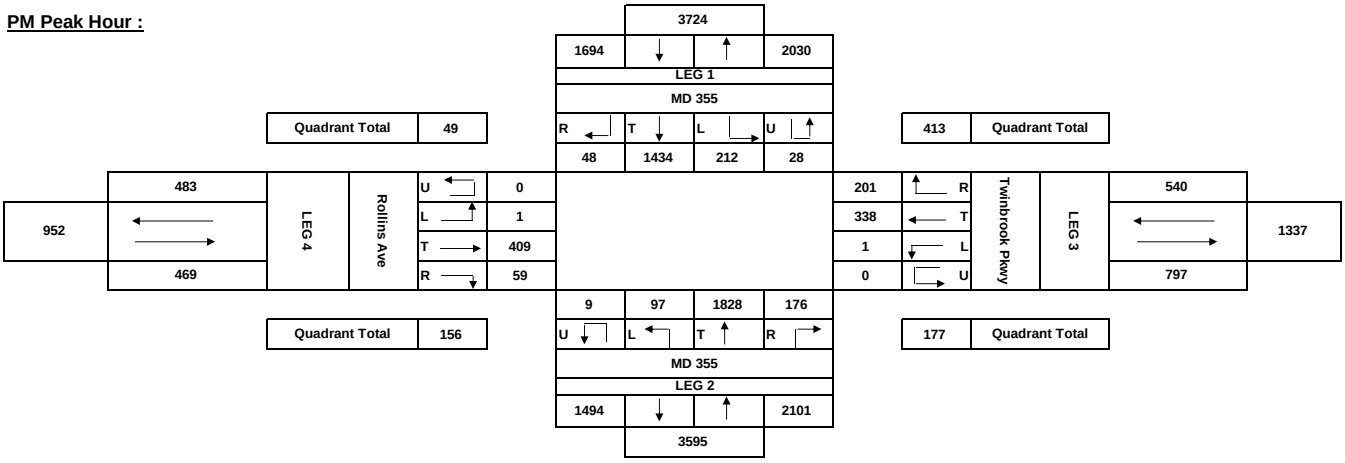

Maryland State Highway Administration
Highway Information Services Division
Turning Counts Study - Field Sheet

Request No.:
Job No.:

Location: MD 355 and Hubbard Dr
Date: 10/1/2011 Saturday
Recorder: LS/NT
Interval (dd) : 15
(In Minutes)

County: Montgomery
Town: North Bethesda
Weather: Cloudy

PEAK HOURS	AM PERIOD 6:00AM-12:00PM	Start	End	Volume	PM PERIOD 12:00PM-7:00PM	Start	End	Volume
		11:00	12:00	4893		12:45	13:45	0

Street Name-->	MD 355				MD 355				Hubbard Dr				Hubbard Dr				
HOUR	From North				From South				From East				From West				GRAND
ENDING	L	T	R	TOT	L	T	R	TOT	L	T	R	TOT	L	T	R	TOT	TOTAL
00:15				0				0				0				0	0
00:30				0				0				0				0	0
00:45				0				0				0				0	0
01:00				0				0				0				0	0
01:15				0				0				0				0	0
01:30				0				0				0				0	0
01:45				0				0				0				0	0
02:00				0				0				0				0	0
02:15				0				0				0				0	0
02:30				0				0				0				0	0
02:45				0				0				0				0	0
03:00				0				0				0				0	0
03:15				0				0				0				0	0
03:30				0				0				0				0	0
03:45				0				0				0				0	0
04:00				0				0				0				0	0
04:15				0				0				0				0	0
04:30				0				0				0				0	0
04:45				0				0				0				0	0
05:00				0				0				0				0	0
05:15				0				0				0				0	0
05:30				0				0				0				0	0
05:45				0				0				0				0	0
06:00				0				0				0				0	0
06:15				0				0				0				0	0
06:30				0				0				0				0	0
06:45				0				0				0				0	0
07:00				0				0				0				0	0
07:15				0				0				0				0	0
07:30				0				0				0				0	0
07:45				0				0				0				0	0
08:00				0				0				0				0	0
08:15				0				0				0				0	0
08:30				0				0				0				0	0
08:45				0				0				0				0	0
09:00				0				0				0				0	0
09:15				0				0				0				0	0
09:30				0				0				0				0	0
09:45				0				0				0				0	0
10:00				0				0				0				0	0
10:15	21	348	8	377	8	350	51	409	33	4	20	57	10	3	6	19	862
10:30	37	368	7	412	5	386	65	456	36	7	44	87	8	6	10	24	979
10:45	38	443	5	486	12	420	70	502	32	6	29	67	8	2	6	16	1071
11:00	38	432	4	474	10	449	64	523	52	3	44	99	7	7	4	18	1114
11:15	**37**	**437**	**4**	**478**	**12**	**437**	**78**	**527**	**53**	**5**	**36**	**94**	**9**	**3**	**10**	**22**	**1121**
11:30	**35**	**429**	**60**	**524**	**26**	**471**	**85**	**582**	**53**	**3**	**47**	**103**	**12**	**6**	**14**	**32**	**1241**
11:45	**33**	**464**	**10**	**507**	**14**	**488**	**67**	**569**	**62**	**6**	**51**	**119**	**9**	**4**	**14**	**27**	**1222**
12:00	**43**	**526**	**9**	**578**	**10**	**514**	**74**	**598**	**55**	**7**	**47**	**109**	**12**	**2**	**10**	**24**	**1309**
12:15	34	505	6	545	17	496	82	595	62	2	48	112	10	5	12	27	1279
12:30	40	454	4	498	22	513	69	604	51	4	50	105	7	1	9	17	1224
12:45	31	418	5	454	23	497	64	584	60	2	43	105	12	0	10	22	1165
13:00	**31**	**564**	**3**	**598**	**1**	**516**	**92**	**609**	**53**	**2**	**47**	**102**	**12**	**1**	**8**	**21**	**1330**
13:15	**34**	**509**	**7**	**550**	**19**	**491**	**76**	**586**	**62**	**3**	**41**	**106**	**7**	**4**	**10**	**21**	**1263**
13:30	**38**	**626**	**6**	**670**	**14**	**489**	**82**	**585**	**69**	**2**	**46**	**117**	**7**	**4**	**8**	**19**	**1391**
13:45	**43**	**535**	**3**	**581**	**18**	**508**	**77**	**603**	**76**	**1**	**36**	**113**	**7**	**0**	**8**	**15**	**1312**
14:00	45	530	4	579	18	504	81	603	53	1	54	108	6	1	7	14	1304
14:15				0				0				0				0	0
14:30				0				0				0				0	0
14:45				0				0				0				0	0
15:00				0				0				0				0	0
15:15				0				0				0				0	0
15:30				0				0				0				0	0
15:45				0				0				0				0	0
16:00				0				0				0				0	0
16:15				0				0				0				0	0
16:30				0				0				0				0	0
16:45				0				0				0				0	0
17:00				0				0				0				0	0
17:15				0				0				0				0	0
17:30				0				0				0				0	0
17:45				0				0				0				0	0
18:00				0				0				0				0	0
18:15				0				0				0				0	0
18:30				0				0				0				0	0
18:45				0				0				0				0	0
19:00				0				0				0				0	0
19:15				0				0				0				0	0
19:30				0				0				0				0	0
19:45				0				0				0				0	0
20:00				0				0				0				0	0
20:15				0				0				0				0	0
20:30				0				0				0				0	0
20:45				0				0				0				0	0
21:00				0				0				0				0	0
TOTAL	**578**	**7588**	**145**	**8311**	**229**	**7529**	**1177**	**8935**	**862**	**58**	**683**	**1603**	**143**	**49**	**146**	**338**	**19187**
AM Peak Vol	148	1856	83	2087	62	1910	304	2276	223	21	181	425	42	15	48	105	4893
PM Peak Vol	146	2234	19	2399	52	2004	327	2383	260	8	170	438	33	9	34	76	5296

Maryland State Highway Administration
Highway Information Services Division
Turning Counts Study - Field Sheet

Request No.:
Job No.:

Location: MD 355 and Hubbard Dr
Date: 10/1/2011 Saturday
Recorder: LS/NT
Interval (dd) : 15
(In Minutes)

County: Montgomery
Town: North Bethesda
Weather: Cloudy

PEAK HOURS	AM PERIOD 6:00AM-12:00PM	Start	End	Volume	PM PERIOD 12:00PM-7:00PM	Start	End	Volume
		11:00	12:00	4893		12:45	13:45	0

PEDESTRIAN SCHOOL CHILDREN & U-TURN BREAKDOWN

Hour	MD 355			MD 355			Hubbard Dr			Hubbard Dr		
Ending	S.C.	PED.	U.T.	S.C.	PED.	U.T.	S.C.	PED.	U.T.	S.C.	PED.	U.T.
00:15												
00:30												
00:45												
01:00												
01:15												
01:30												
01:45												
02:00												
02:15												
02:30												
02:45												
03:00												
03:15												
03:30												
03:45												
04:00												
04:15												
04:30												
04:45												
05:00												
05:15												
05:30												
05:45												
06:00												
06:15												
06:30												
06:45												
07:00												
07:15												
07:30												
07:45												
08:00												
08:15												
08:30												
08:45												
09:00												
09:15												
09:30												
09:45												
10:00												
10:15			1									
10:30			5									
10:45			1									
11:00			0									
11:15			0									
11:30			3									
11:45			3									
12:00			3									
12:15			0									
12:30			0									
12:45			5									
13:00			3									
13:15			2									
13:30			0									
13:45			4									
14:00			1									
14:15												
14:30												
14:45												
15:00												
15:15												
15:30												
15:45												
16:00												
16:15												
16:30												
16:45												
17:00												
17:15												
17:30												
17:45												
18:00												
18:15												
18:30												
18:45												
19:00												
19:15												
19:30												
19:45												
20:00												
20:15												
20:30												
20:45												
21:00												
TOTAL	**0**	**0**	**31**	**0**	**0**	**0**	**0**	**0**	**0**	**0**	**0**	**0**
AM Peak Vol	0	0	9	0	0	0	0	0	0	0	0	0
PM Peak Vol	0	0	9	0	0	0	0	0	0	0	0	0

Maryland State Highway Administration
Highway Information Services Division
Turning Counts Study - Field Sheet

Request No.:
Job No.:

Location: MD 355 and Hubbard Dr
Date: 10/1/2011 Saturday
Recorder: LS/NT
Interval (dd) : 15
(In Minutes)

County: Montgomery
Town: North Bethesda
Weather: Cloudy

PEAK HOURS	AM PERIOD 6:00AM-12:00PM	Start	End	Volume	PM PERIOD 12:00PM-7:00PM	Start	End	Volume
		11:00	12:00	4893		12:45	13:45	0

Turning Movement Summary:

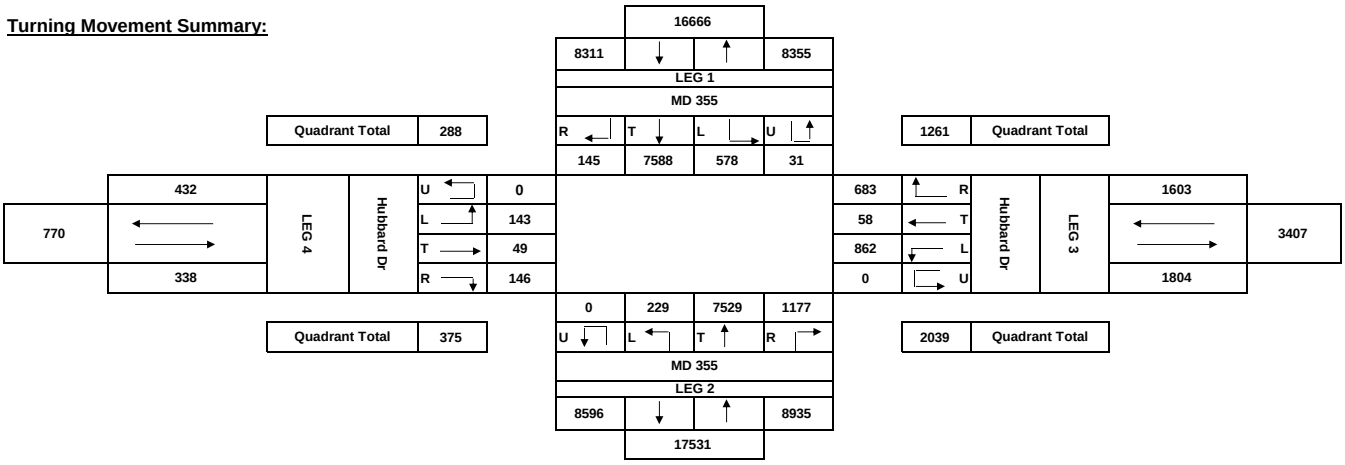

Comments:

AM Peak Hour :

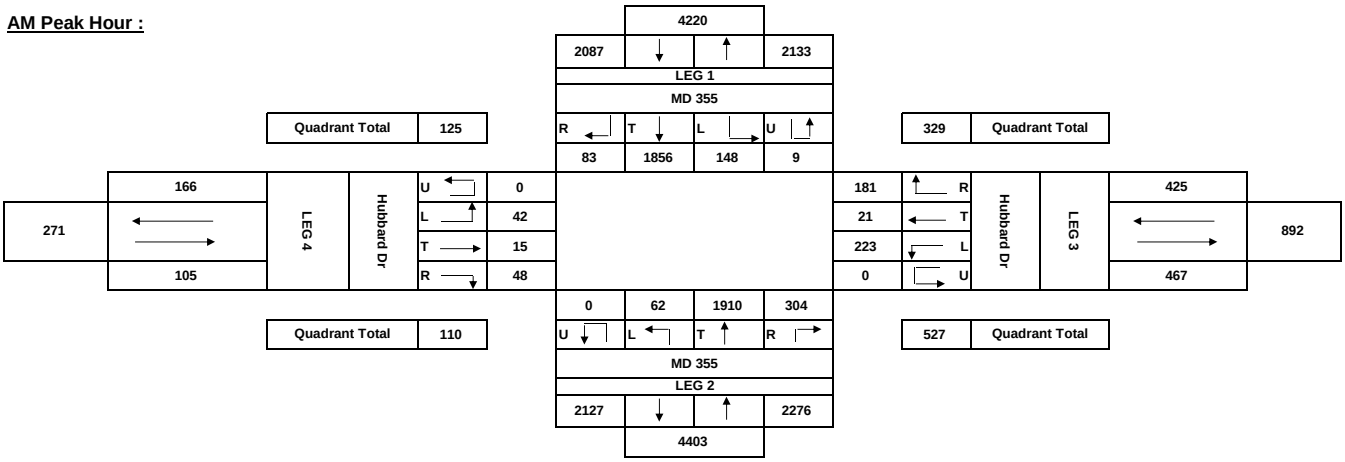

PM Peak Hour :

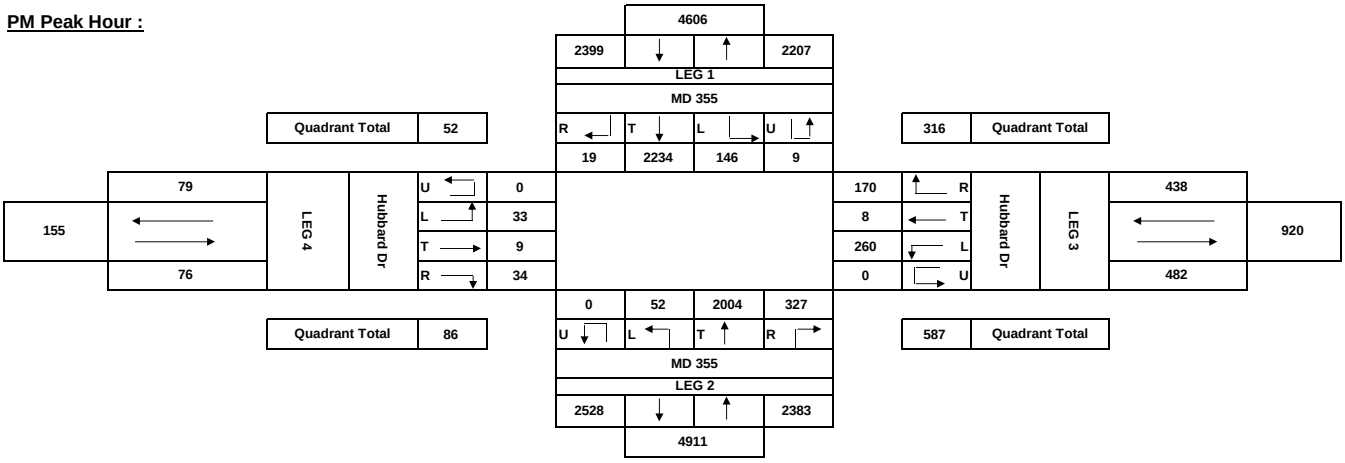

Maryland State Highway Administration
Highway Information Services Division
Turning Counts Study - Field Sheet

Request No.:
Job No.:

Location: MD 355 and Strathmore Ave/Strathmore Rd
Date: 9/14/2011 Wednesday
Recorder: AM/LS
Interval (dd) : 15
(In Minutes)

County: Montgomery
Town: North Bethesda
Weather: Partly Cloudy

PEAK HOURS	AM PERIOD 6:00AM-12:00PM	Start	End	Volume	PM PERIOD 12:00PM-7:00PM	Start	End	Volume
		07:15	08:15	4530		17:30	18:30	5688

Street Name-->	MD 355				MD 355				Strathmore Ave				Strathmore Rd				
HOUR	From North				From South				From East				From West				GRAND
ENDING	L	T	R	TOT	L	T	R	TOT	L	T	R	TOT	L	T	R	TOT	TOTAL
00:15				0				0				0				0	0
00:30				0				0				0				0	0
00:45				0				0				0				0	0
01:00				0				0				0				0	0
01:15				0				0				0				0	0
01:30				0				0				0				0	0
01:45				0				0				0				0	0
02:00				0				0				0				0	0
02:15				0				0				0				0	0
02:30				0				0				0				0	0
02:45				0				0				0				0	0
03:00				0				0				0				0	0
03:15				0				0				0				0	0
03:30				0				0				0				0	0
03:45				0				0				0				0	0
04:00				0				0				0				0	0
04:15				0				0				0				0	0
04:30				0				0				0				0	0
04:45				0				0				0				0	0
05:00				0				0				0				0	0
05:15				0				0				0				0	0
05:30				0				0				0				0	0
05:45				0				0				0				0	0
06:00				0				0				0				0	0
06:15				0				0				0				0	0
06:30				0				0				0				0	0
06:45	44	372	6	422	6	150	48	204	58	0	15	73	2	6	5	13	712
07:00	34	359	11	404	5	198	46	249	86	6	12	104	2	2	5	9	766
07:15	59	414	9	482	5	217	84	306	112	5	20	137	4	2	6	12	937
07:30	**52**	**442**	**19**	**513**	**5**	**239**	**126**	**370**	**118**	**8**	**30**	**156**	**5**	**3**	**7**	**15**	**1054**
07:45	**58**	**453**	**16**	**527**	**11**	**330**	**91**	**432**	**159**	**14**	**56**	**229**	**10**	**7**	**8**	**25**	**1213**
08:00	**45**	**440**	**15**	**500**	**12**	**287**	**60**	**359**	**159**	**13**	**50**	**222**	**8**	**8**	**9**	**25**	**1106**
08:15	**61**	**437**	**7**	**505**	**4**	**319**	**88**	**411**	**162**	**10**	**51**	**223**	**10**	**3**	**5**	**18**	**1157**
08:30	54	423	1	478	0	327	72	399	110	3	59	172	1	0	1	2	1051
08:45	42	452	2	496	3	315	87	405	116	0	58	174	0	0	1	1	1076
09:00	50	403	2	455	2	362	73	437	95	1	47	143	2	1	1	4	1039
09:15	46	355	4	405	2	355	69	426	106	0	81	187	1	0	5	6	1024
09:30	27	155	2	184	4	298	55	357	80	1	62	143	1	0	0	1	685
09:45				0				0				0				0	0
10:00				0				0				0				0	0
10:15				0				0				0				0	0
10:30				0				0				0				0	0
10:45				0				0				0				0	0
11:00				0				0				0				0	0
11:15				0				0				0				0	0
11:30				0				0				0				0	0
11:45				0				0				0				0	0
12:00				0				0				0				0	0
12:15				0				0				0				0	0
12:30				0				0				0				0	0
12:45				0				0				0				0	0
13:00				0				0				0				0	0
13:15				0				0				0				0	0
13:30				0				0				0				0	0
13:45				0				0				0				0	0
14:00				0				0				0				0	0
14:15				0				0				0				0	0
14:30				0				0				0				0	0
14:45				0				0				0				0	0
15:00				0				0				0				0	0
15:15				0				0				0				0	0
15:30				0				0				0				0	0
15:45				0				0				0				0	0
16:00				0				0				0				0	0
16:15	69	399	9	477	0	401	121	522	66	0	61	127	5	4	4	13	1139
16:30	65	389	8	462	5	383	115	503	47	4	53	104	1	3	5	9	1078
16:45	70	381	3	454	5	436	118	559	60	5	55	120	9	6	3	18	1151
17:00	90	396	6	492	10	407	109	526	56	2	75	133	5	7	8	20	1171
17:15	103	477	7	587	8	425	134	567	86	2	72	160	5	5	8	18	1332
17:30	102	510	8	620	7	459	143	609	73	3	67	143	4	6	11	21	1393
17:45	**87**	**461**	**8**	**556**	**8**	**464**	**130**	**602**	**97**	**5**	**69**	**171**	**12**	**7**	**16**	**35**	**1364**
18:00	**101**	**491**	**16**	**608**	**11**	**529**	**140**	**680**	**63**	**3**	**65**	**131**	**6**	**5**	**14**	**25**	**1444**
18:15	**74**	**433**	**10**	**517**	**7**	**573**	**172**	**752**	**74**	**2**	**65**	**141**	**11**	**11**	**22**	**44**	**1454**
18:30	**96**	**526**	**2**	**624**	**4**	**498**	**161**	**663**	**67**	**4**	**56**	**127**	**5**	**4**	**3**	**12**	**1426**
18:45	78	432	9	519	6	483	117	606	81	1	49	131	4	2	4	10	1266
19:00	102	456	7	565	9	418	147	574	85	4	61	150	7	6	3	16	1305
19:15				0				0				0				0	0
19:30				0				0				0				0	0
19:45				0				0				0				0	0
20:00				0				0				0				0	0
20:15				0				0				0				0	0
20:30				0				0				0				0	0
20:45				0				0				0				0	0
21:00				0				0				0				0	0
TOTAL	**1609**	**10056**	**187**	**11852**	**139**	**8873**	**2506**	**11518**	**2216**	**96**	**1289**	**3601**	**120**	**98**	**154**	**372**	**27343**
AM Peak Vol	216	1772	57	2045	32	1175	365	1572	598	45	187	830	33	21	29	83	4530
PM Peak Vol	358	1911	36	2305	30	2064	603	2697	301	14	255	570	34	27	55	116	5688

Maryland State Highway Administration
Highway Information Services Division
Turning Counts Study - Field Sheet

Request No.:
Job No.:

Location: MD 355 and Strathmore Ave/Strathmore Rd
Date: 9/14/2011 Wednesday
Recorder: AM/LS
Interval (dd) : 15
(In Minutes)

County: Montgomery
Town: North Bethesda
Weather: Partly Cloudy

PEAK HOURS	AM PERIOD 6:00AM-12:00PM	Start	End	Volume	PM PERIOD 12:00PM-7:00PM	Start	End	Volume
		07:15	08:15	**4530**		17:30	18:30	**5688**

PEDESTRIAN SCHOOL CHILDREN & U-TURN BREAKDOWN

Hour	MD 355			MD 355			Strathmore Ave			Strathmore Rd		
Ending	**S.C.**	**PED.**	**U.T.**	**S.C.**	**PED.**	**U.T.**	**S.C.**	**PED.**	**U.T.**	**S.C.**	**PED.**	**U.T.**
00:15												
00:30												
00:45												
01:00												
01:15												
01:30												
01:45												
02:00												
02:15												
02:30												
02:45												
03:00												
03:15												
03:30												
03:45												
04:00												
04:15												
04:30												
04:45												
05:00												
05:15												
05:30												
05:45												
06:00												
06:15												
06:30												
06:45												
07:00												
07:15												
07:30												
07:45												
08:00												
08:15												
08:30												
08:45												
09:00												
09:15												
09:30												
09:45												
10:00												
10:15												
10:30												
10:45												
11:00												
11:15												
11:30												
11:45												
12:00												
12:15												
12:30												
12:45												
13:00												
13:15												
13:30												
13:45												
14:00												
14:15												
14:30												
14:45												
15:00												
15:15												
15:30												
15:45												
16:00												
16:15												
16:30												
16:45												
17:00												
17:15												
17:30												
17:45												
18:00												
18:15												
18:30												
18:45												
19:00												
19:15												
19:30												
19:45												
20:00												
20:15												
20:30												
20:45												
21:00												
TOTAL	**0**	**0**	**0**	**0**	**0**	**0**	**0**	**0**	**0**	**0**	**0**	**0**
AM Peak Vol	0	0	0	0	0	0	0	0	0	0	0	0
PM Peak Vol	0	0	0	0	0	0	0	0	0	0	0	0

Maryland State Highway Administration
Highway Information Services Division
Turning Counts Study - Field Sheet

Request No.:
Job No.:

Location: MD 355 and Strathmore Ave/Strathmore Rd
Date: 9/14/2011 Wednesday
Recorder: AM/LS
Interval (dd) : 15
(In Minutes)

County: Montgomery
Town: North Bethesda
Weather: Partly Cloudy

PEAK HOURS	AM PERIOD 6:00AM-12:00PM	Start	End	Volume	PM PERIOD 12:00PM-7:00PM	Start	End	Volume
		07:15	08:15	4530		17:30	18:30	5688

Turning Movement Summary:

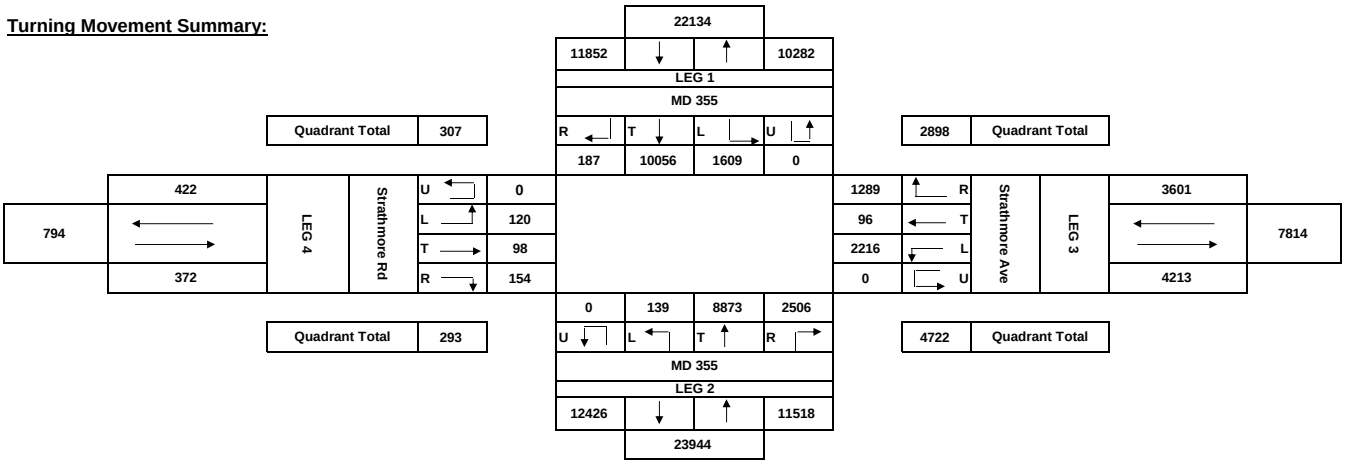

Comments:

AM Peak Hour :

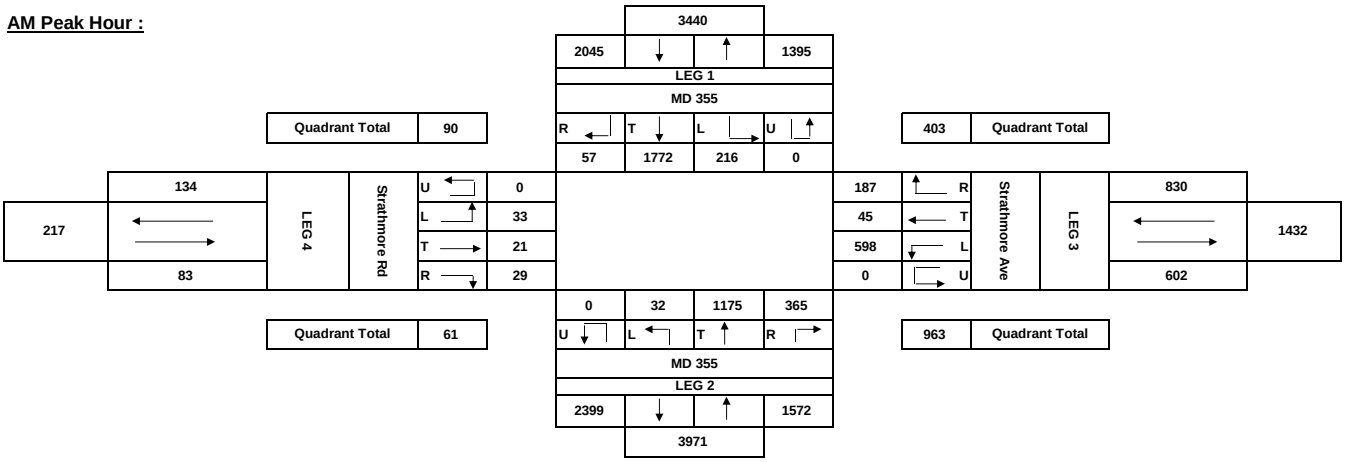

PM Peak Hour :

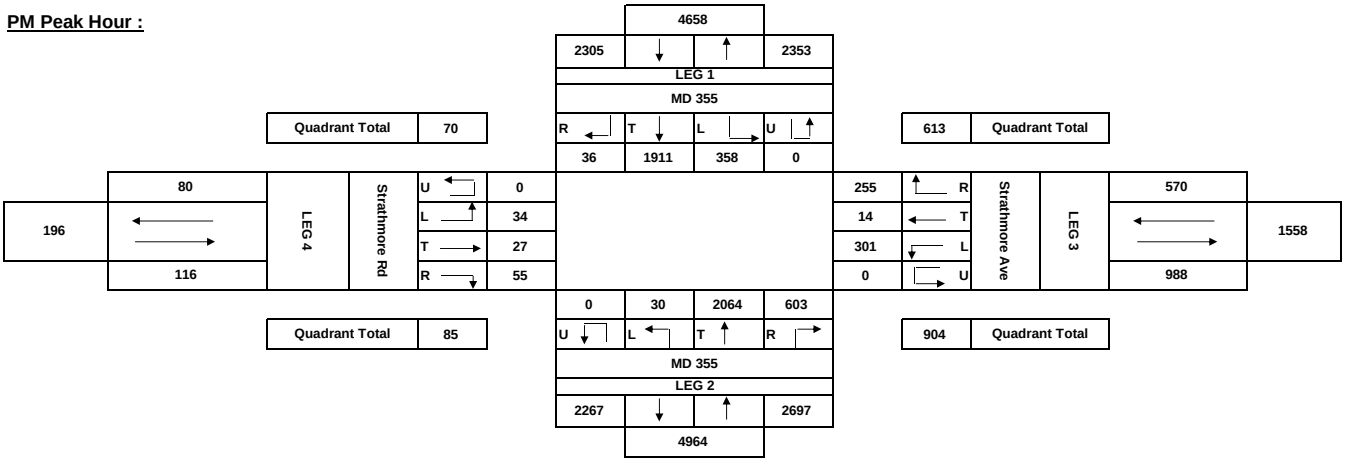

Maryland State Highway Administration
Highway Information Services Division
Turning Counts Study - Field Sheet

Request No.:
Job No.:

Location: MD 355 and Tuckerman
Date: 9/29/2011 Thursday
Recorder: AM/MO
Interval (dd) : 15
(In Minutes)

County: Montgomery
Town: North Bethesda
Weather: Clear

PEAK HOURS	AM PERIOD 6:00AM-12:00PM	Start	End	Volume	PM PERIOD 12:00PM-7:00PM	Start	End	Volume
		07:30	08:30	5809		17:15	18:15	5342

Street Name-->	MD 355				MD 355				Tuckerman Ln				Tuckerman Ln				
HOUR	From North				From South				From East				From West				GRAND
ENDING	L	T	R	TOT	L	T	R	TOT	L	T	R	TOT	L	T	R	TOT	TOTAL
00:15				0				0				0				0	0
00:30				0				0				0				0	0
00:45				0				0				0				0	0
01:00				0				0				0				0	0
01:15				0				0				0				0	0
01:30				0				0				0				0	0
01:45				0				0				0				0	0
02:00				0				0				0				0	0
02:15				0				0				0				0	0
02:30				0				0				0				0	0
02:45				0				0				0				0	0
03:00				0				0				0				0	0
03:15				0				0				0				0	0
03:30				0				0				0				0	0
03:45				0				0				0				0	0
04:00				0				0				0				0	0
04:15				0				0				0				0	0
04:30				0				0				0				0	0
04:45				0				0				0				0	0
05:00				0				0				0				0	0
05:15				0				0				0				0	0
05:30				0				0				0				0	0
05:45				0				0				0				0	0
06:00				0				0				0				0	0
06:15				0				0				0				0	0
06:30				0				0				0				0	0
06:45	20	204	34	258	10	188	7	205	2	13	15	30	40	68	32	140	633
07:00	50	288	70	408	9	210	7	226	12	24	16	52	35	68	38	141	827
07:15	54	396	100	550	16	214	15	245	2	30	16	48	64	95	74	233	1076
07:30	92	424	137	653	21	258	20	299	4	35	42	81	90	141	74	305	1338
07:45	**110**	**520**	**155**	**785**	**24**	**288**	**15**	**327**	**4**	**39**	**36**	**79**	**64**	**156**	**110**	**330**	**1521**
08:00	**102**	**475**	**146**	**723**	**28**	**295**	**19**	**342**	**3**	**46**	**47**	**96**	**74**	**190**	**90**	**354**	**1515**
08:15	**108**	**443**	**129**	**680**	**31**	**272**	**18**	**321**	**3**	**51**	**32**	**86**	**63**	**147**	**99**	**309**	**1396**
08:30	**84**	**410**	**123**	**617**	**17**	**284**	**15**	**316**	**7**	**49**	**50**	**106**	**76**	**161**	**101**	**338**	**1377**
08:45	97	463	129	689	20	271	9	300	5	43	33	81	54	106	85	245	1315
09:00	41	465	143	649	29	295	4	328	9	38	57	104	60	70	131	261	1342
09:15	56	521	111	688	29	294	6	329	7	32	42	81	59	94	180	333	1431
09:30	16	399	89	504	18	274	3	295	7	29	30	66	71	58	96	225	1090
09:45				0				0				0				0	0
10:00				0				0				0				0	0
10:15				0				0				0				0	0
10:30				0				0				0				0	0
10:45				0				0				0				0	0
11:00				0				0				0				0	0
11:15				0				0				0				0	0
11:30				0				0				0				0	0
11:45				0				0				0				0	0
12:00				0				0				0				0	0
12:15				0				0				0				0	0
12:30				0				0				0				0	0
12:45				0				0				0				0	0
13:00				0				0				0				0	0
13:15				0				0				0				0	0
13:30				0				0				0				0	0
13:45				0				0				0				0	0
14:00				0				0				0				0	0
14:15				0				0				0				0	0
14:30				0				0				0				0	0
14:45				0				0				0				0	0
15:00				0				0				0				0	0
15:15				0				0				0				0	0
15:30				0				0				0				0	0
15:45				0				0				0				0	0
16:00				0				0				0				0	0
16:15	24	314	71	409	31	376	7	414	9	46	29	84	106	23	31	160	1067
16:30	26	347	74	447	23	324	4	351	10	35	42	87	120	25	24	169	1054
16:45	31	339	80	450	27	389	4	420	9	52	45	106	100	22	34	156	1132
17:00	27	342	102	471	42	312	3	357	6	42	59	107	105	42	50	197	1132
17:15	45	334	100	479	38	383	8	429	18	58	62	138	119	52	38	209	1255
17:30	**53**	**472**	**101**	**626**	**105**	**313**	**7**	**425**	**12**	**84**	**57**	**153**	**119**	**63**	**29**	**211**	**1415**
17:45	**43**	**326**	**87**	**456**	**39**	**408**	**10**	**457**	**12**	**66**	**82**	**160**	**124**	**47**	**52**	**223**	**1296**
18:00	**51**	**323**	**92**	**466**	**30**	**357**	**10**	**397**	**9**	**100**	**94**	**203**	**116**	**50**	**41**	**207**	**1273**
18:15	**42**	**362**	**122**	**526**	**35**	**406**	**3**	**444**	**10**	**77**	**77**	**164**	**119**	**51**	**54**	**224**	**1358**
18:30	59	374	103	536	37	349	10	396	11	85	106	202	133	43	39	215	1349
18:45	29	382	68	479	34	418	5	457	8	102	83	193	120	36	39	195	1324
19:00	35	250	106	391	36	355	6	397	5	75	78	158	100	42	47	189	1135
19:15				0				0				0				0	0
19:30				0				0				0				0	0
19:45				0				0				0				0	0
20:00				0				0				0				0	0
20:15				0				0				0				0	0
20:30				0				0				0				0	0
20:45				0				0				0				0	0
21:00				0				0				0				0	0
TOTAL	**1295**	**9173**	**2472**	**12940**	**729**	**7533**	**215**	**8477**	**184**	**1251**	**1230**	**2665**	**2131**	**1850**	**1588**	**5569**	**29651**
AM Peak Vol	404	1848	553	2805	100	1139	67	1306	17	185	165	367	277	654	400	1331	5809
PM Peak Vol	189	1483	402	2074	209	1484	30	1723	43	327	310	680	478	211	176	865	5342

Maryland State Highway Administration
Highway Information Services Division
Turning Counts Study - Field Sheet

Request No.:
Job No.:

Location: MD 355 and Tuckerman
Date: 9/29/2011 Thursday
Recorder: AM/MO
Interval (dd) : 15
(In Minutes)

County: Montgomery
Town: North Bethesda
Weather: Clear

PEAK HOURS	AM PERIOD 6:00AM-12:00PM	Start	End	Volume	PM PERIOD 12:00PM-7:00PM	Start	End	Volume
		07:30	08:30	**5809**		17:15	18:15	**5342**

PEDESTRIAN SCHOOL CHILDREN & U-TURN BREAKDOWN

Hour	MD 355			MD 355			Tuckerman Ln			Tuckerman Ln		
Ending	**S.C.**	**PED.**	**U.T.**	**S.C.**	**PED.**	**U.T.**	**S.C.**	**PED.**	**U.T.**	**S.C.**	**PED.**	**U.T.**
00:15												
00:30												
00:45												
01:00												
01:15												
01:30												
01:45												
02:00												
02:15												
02:30												
02:45												
03:00												
03:15												
03:30												
03:45												
04:00												
04:15												
04:30												
04:45												
05:00												
05:15												
05:30												
05:45												
06:00												
06:15												
06:30												
06:45												
07:00												
07:15												
07:30												
07:45												
08:00												
08:15												
08:30												
08:45												
09:00												
09:15												
09:30												
09:45												
10:00												
10:15												
10:30												
10:45												
11:00												
11:15												
11:30												
11:45												
12:00												
12:15												
12:30												
12:45												
13:00												
13:15												
13:30												
13:45												
14:00												
14:15												
14:30												
14:45												
15:00												
15:15												
15:30												
15:45												
16:00												
16:15												
16:30												
16:45												
17:00												
17:15												
17:30												
17:45												
18:00												
18:15												
18:30												
18:45												
19:00												
19:15												
19:30												
19:45												
20:00												
20:15												
20:30												
20:45												
21:00												
TOTAL	**0**	**0**	**0**	**0**	**0**	**0**	**0**	**0**	**0**	**0**	**0**	**0**
AM Peak Vol	0	0	0	0	0	0	0	0	0	0	0	0
PM Peak Vol	0	0	0	0	0	0	0	0	0	0	0	0

Maryland State Highway Administration
Highway Information Services Division
Turning Counts Study - Field Sheet

Request No.:
Job No.:

Location: MD 355 and Tuckerman
Date: 9/29/2011 Thursday
Recorder: AM/MO
Interval (dd) : 15
(In Minutes)

County: Montgomery
Town: North Bethesda
Weather: Clear

PEAK HOURS	AM PERIOD 6:00AM-12:00PM	Start	End	Volume	PM PERIOD 12:00PM-7:00PM	Start	End	Volume
		07:30	08:30	5809		17:15	18:15	5342

Turning Movement Summary:

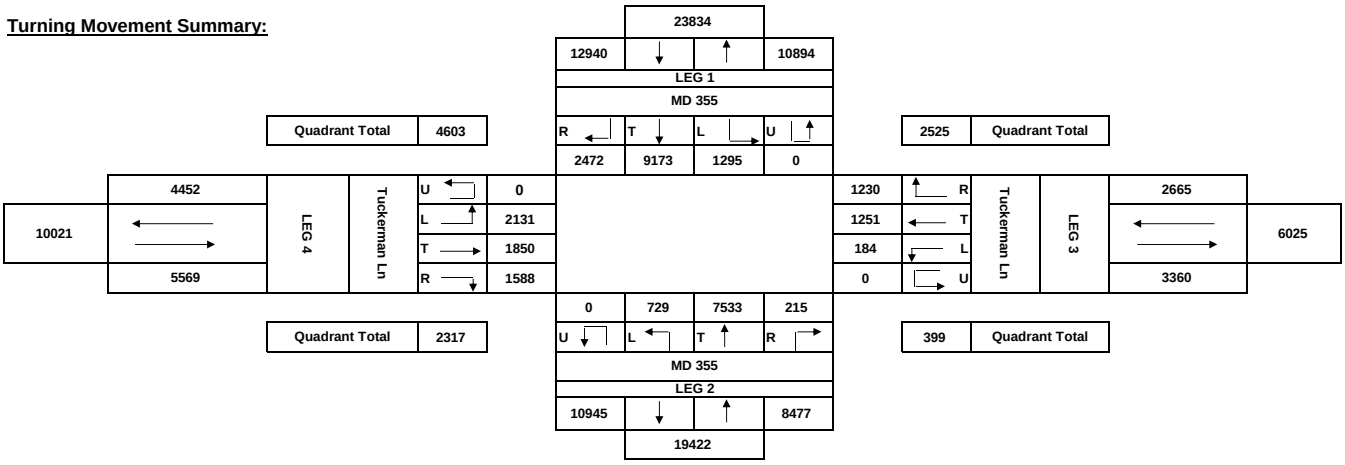

Comments:

AM Peak Hour :

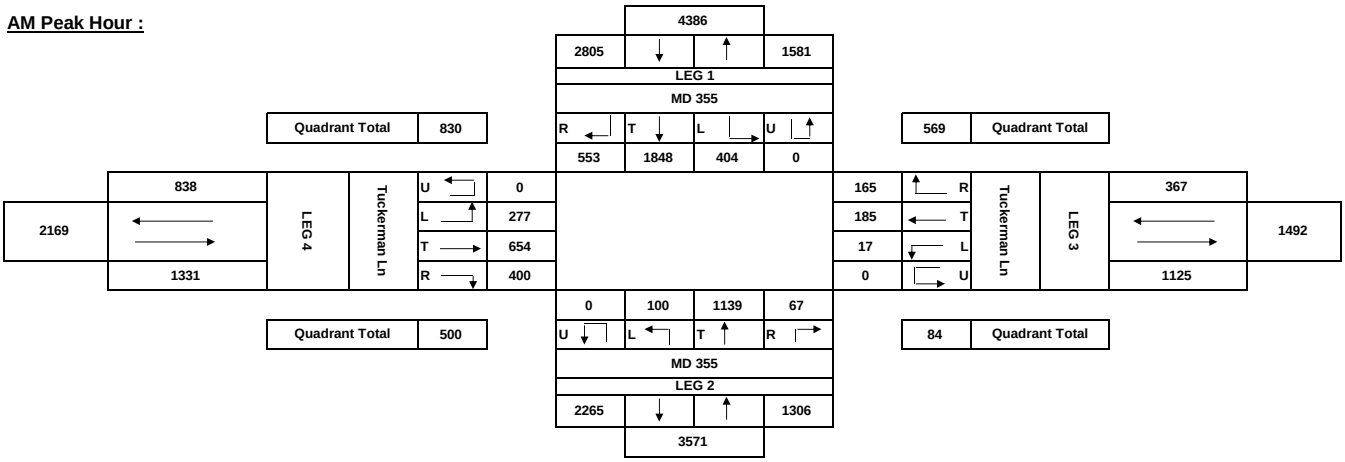

PM Peak Hour :

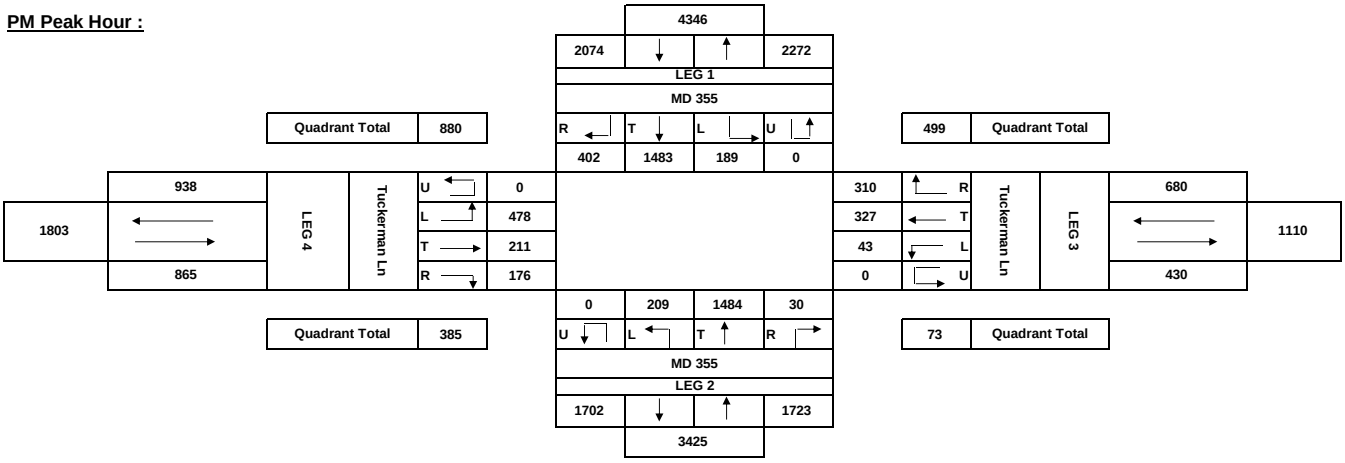

Maryland State Highway Administration
Highway Information Services Division
Turning Counts Study - Field Sheet

Request No.:
Job No.:

Location: Executive Blvd & Nicholson Ln
Date: 9/10/2011 Saturday
Recorder: AM
Interval (dd) : 15
(In Minutes)

County: Montgomery
Town: North Bethesda
Weather: Partly Cloudy

PEAK HOURS	AM PERIOD 6:00AM-12:00PM	Start	End	Volume	PM PERIOD 12:00PM-7:00PM	Start	End	Volume
		11:00	12:00	1319		13:00	14:00	0

Street Name-->	Executive Blvd				Executive Blvd				Nicholson Ln				Nicholson Ln				
HOUR	From North				From South				From East				From West				GRAND
ENDING	L	T	R	TOT	L	T	R	TOT	L	T	R	TOT	L	T	R	TOT	TOTAL
00:15				0				0				0				0	0
00:30				0				0				0				0	0
00:45				0				0				0				0	0
01:00				0				0				0				0	0
01:15				0				0				0				0	0
01:30				0				0				0				0	0
01:45				0				0				0				0	0
02:00				0				0				0				0	0
02:15				0				0				0				0	0
02:30				0				0				0				0	0
02:45				0				0				0				0	0
03:00				0				0				0				0	0
03:15				0				0				0				0	0
03:30				0				0				0				0	0
03:45				0				0				0				0	0
04:00				0				0				0				0	0
04:15				0				0				0				0	0
04:30				0				0				0				0	0
04:45				0				0				0				0	0
05:00				0				0				0				0	0
05:15				0				0				0				0	0
05:30				0				0				0				0	0
05:45				0				0				0				0	0
06:00				0				0				0				0	0
06:15				0				0				0				0	0
06:30				0				0				0				0	0
06:45				0				0				0				0	0
07:00				0				0				0				0	0
07:15				0				0				0				0	0
07:30				0				0				0				0	0
07:45				0				0				0				0	0
08:00				0				0				0				0	0
08:15				0				0				0				0	0
08:30				0				0				0				0	0
08:45				0				0				0				0	0
09:00				0				0				0				0	0
09:15				0				0				0				0	0
09:30				0				0				0				0	0
09:45				0				0				0				0	0
10:00				0				0				0				0	0
10:15	21	11	7	39	2	10	2	14	1	76	16	93	11	93	3	107	253
10:30	27	9	7	43	5	11	2	18	4	81	19	104	11	75	7	93	258
10:45	25	25	16	66	5	10	3	18	0	91	26	117	16	91	3	110	311
11:00	35	22	14	71	5	12	2	19	1	91	35	127	22	103	7	132	349
11:15	**21**	**6**	**9**	**36**	**3**	**7**	**3**	**13**	**0**	**106**	**21**	**127**	**21**	**87**	**3**	**111**	**287**
11:30	**25**	**10**	**13**	**48**	**3**	**8**	**6**	**17**	**2**	**125**	**25**	**152**	**21**	**100**	**4**	**125**	**342**
11:45	**25**	**7**	**15**	**47**	**4**	**4**	**1**	**9**	**0**	**96**	**19**	**115**	**19**	**116**	**3**	**138**	**309**
12:00	**39**	**18**	**15**	**72**	**6**	**16**	**3**	**25**	**1**	**124**	**31**	**156**	**17**	**106**	**5**	**128**	**381**
12:15	28	14	6	48	4	7	2	13	2	136	34	172	23	105	3	131	364
12:30	31	11	10	52	6	6	0	12	2	109	24	135	21	114	2	137	336
12:45	41	14	15	70	10	14	4	28	1	117	24	142	23	120	7	150	390
13:00	31	10	14	55	5	9	2	16	0	126	36	162	22	95	4	121	354
13:15	**21**	**23**	**17**	**61**	**4**	**7**	**0**	**11**	**1**	**135**	**23**	**159**	**13**	**122**	**2**	**137**	**368**
13:30	**38**	**21**	**15**	**74**	**3**	**7**	**1**	**11**	**1**	**124**	**36**	**161**	**18**	**92**	**4**	**114**	**360**
13:45	**30**	**15**	**12**	**57**	**9**	**11**	**2**	**22**	**3**	**116**	**38**	**157**	**32**	**103**	**3**	**138**	**374**
14:00	**30**	**16**	**13**	**59**	**6**	**4**	**6**	**16**	**1**	**128**	**38**	**167**	**21**	**109**	**2**	**132**	**374**
14:15				0				0				0				0	0
14:30				0				0				0				0	0
14:45				0				0				0				0	0
15:00				0				0				0				0	0
15:15				0				0				0				0	0
15:30				0				0				0				0	0
15:45				0				0				0				0	0
16:00				0				0				0				0	0
16:15				0				0				0				0	0
16:30				0				0				0				0	0
16:45				0				0				0				0	0
17:00				0				0				0				0	0
17:15				0				0				0				0	0
17:30				0				0				0				0	0
17:45				0				0				0				0	0
18:00				0				0				0				0	0
18:15				0				0				0				0	0
18:30				0				0				0				0	0
18:45				0				0				0				0	0
19:00				0				0				0				0	0
19:15				0				0				0				0	0
19:30				0				0				0				0	0
19:45				0				0				0				0	0
20:00				0				0				0				0	0
20:15				0				0				0				0	0
20:30				0				0				0				0	0
20:45				0				0				0				0	0
21:00				0				0				0				0	0
TOTAL	**468**	**232**	**198**	**898**	**80**	**143**	**39**	**262**	**20**	**1781**	**445**	**2246**	**311**	**1631**	**62**	**2004**	**5410**
AM Peak Vol	110	41	52	203	16	35	13	64	3	451	96	550	78	409	15	502	1319
PM Peak Vol	119	75	57	251	22	29	9	60	6	503	135	644	84	426	11	521	1476

Maryland State Highway Administration
Highway Information Services Division
Turning Counts Study - Field Sheet

Request No.:
Job No.:

Location: Executive Blvd & Nicholson Ln
Date: 9/10/2011 Saturday
Recorder: AM
Interval (dd) : 15
(In Minutes)

County: Montgomery
Town: North Bethesda
Weather: Partly Cloudy

PEAK HOURS	AM PERIOD 6:00AM-12:00PM	Start	End	Volume	PM PERIOD 12:00PM-7:00PM	Start	End	Volume
		11:00	12:00	1319		13:00	14:00	0

PEDESTRIAN SCHOOL CHILDREN & U-TURN BREAKDOWN

Hour	Executive Blvd			Executive Blvd			Nicholson Ln			Nicholson Ln		
Ending	S.C.	PED.	U.T.	S.C.	PED.	U.T.	S.C.	PED.	U.T.	S.C.	PED.	U.T.
00:15												
00:30												
00:45												
01:00												
01:15												
01:30												
01:45												
02:00												
02:15												
02:30												
02:45												
03:00												
03:15												
03:30												
03:45												
04:00												
04:15												
04:30												
04:45												
05:00												
05:15												
05:30												
05:45												
06:00												
06:15												
06:30												
06:45												
07:00												
07:15												
07:30												
07:45												
08:00												
08:15												
08:30												
08:45												
09:00												
09:15												
09:30												
09:45												
10:00												
10:15												
10:30												
10:45												
11:00												
11:15												
11:30												
11:45												
12:00												
12:15												
12:30												
12:45												
13:00												
13:15												
13:30												
13:45												
14:00												
14:15												
14:30												
14:45												
15:00												
15:15												
15:30												
15:45												
16:00												
16:15												
16:30												
16:45												
17:00												
17:15												
17:30												
17:45												
18:00												
18:15												
18:30												
18:45												
19:00												
19:15												
19:30												
19:45												
20:00												
20:15												
20:30												
20:45												
21:00												
TOTAL	**0**	**0**	**0**	**0**	**0**	**0**	**0**	**0**	**0**	**0**	**0**	**0**
AM Peak Vol	0	0	0	0	0	0	0	0	0	0	0	0
PM Peak Vol	0	0	0	0	0	0	0	0	0	0	0	0

Maryland State Highway Administration
Highway Information Services Division
Turning Counts Study - Field Sheet

Request No.:
Job No.:

Location: Executive Blvd & Nicholson Ln
Date: 9/10/2011 Saturday
Recorder: AM
Interval (dd) : 15 (In Minutes)

County: Montgomery
Town: North Bethesda
Weather: Partly Cloudy

PEAK HOURS	AM PERIOD 6:00AM-12:00PM	Start	End	Volume	PM PERIOD 12:00PM-7:00PM	Start	End	Volume
		11:00	12:00	1319		13:00	14:00	0

Turning Movement Summary:

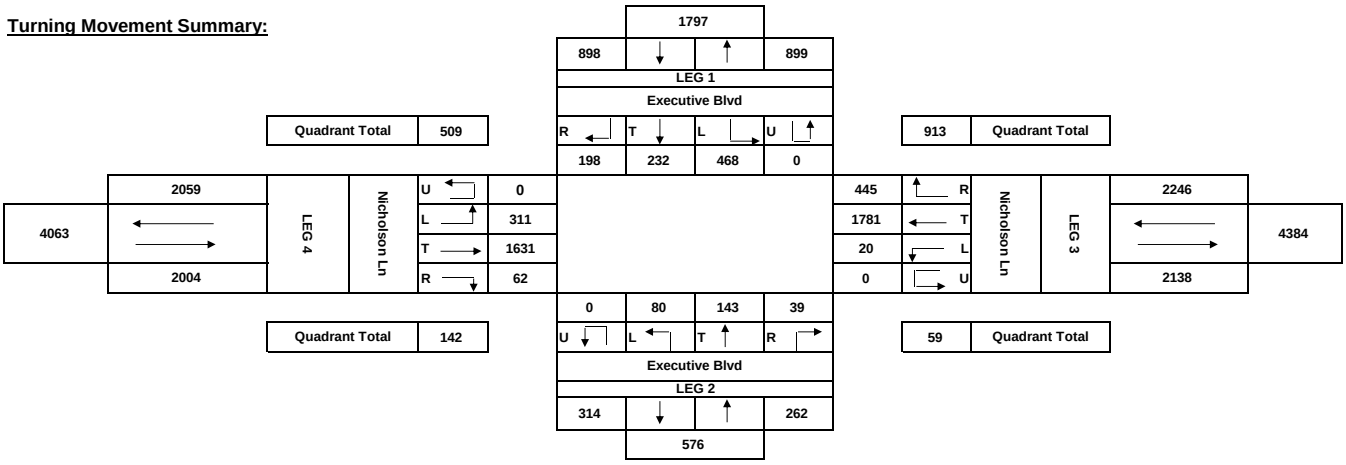

Comments:

AM Peak Hour :

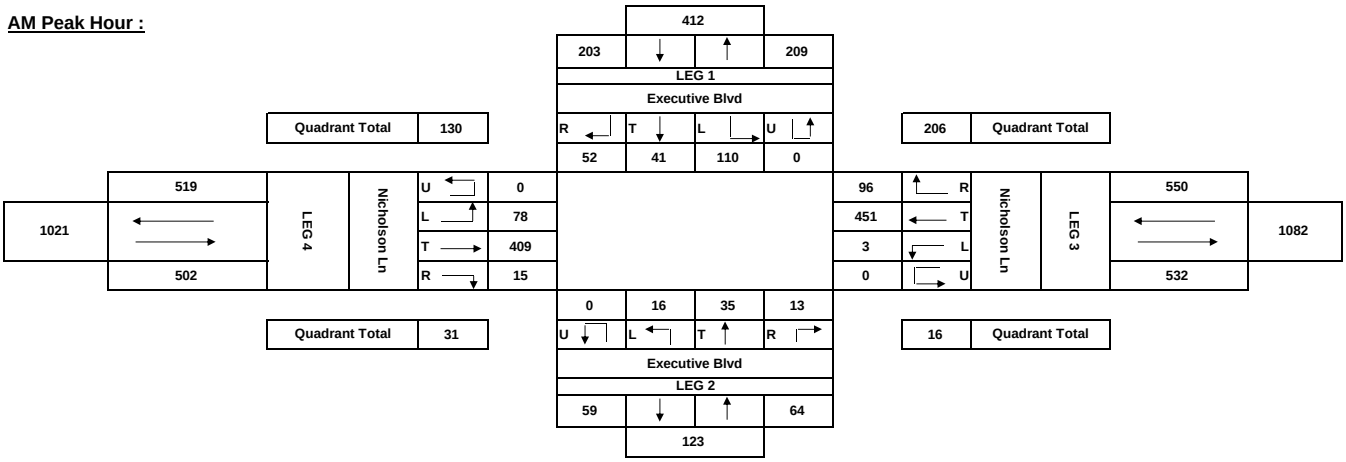

PM Peak Hour :

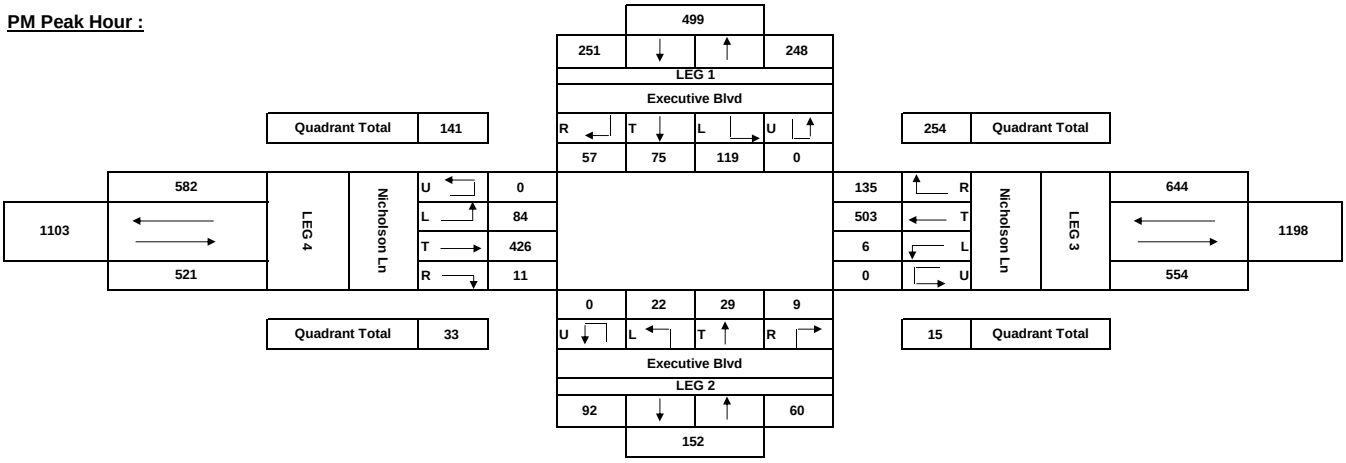

Maryland State Highway Administration
Highway Information Services Division
Turning Counts Study - Field Sheet

Request No.:
Job No.:

Location: I-270 and MD 187 (1st intersection from the West)
Date: 11/19/2011 Saturday
Recorder: AM
Interval (dd) : 15
(In Minutes)

County: Montgomery
Town: North Bethesda
Weather: Sunny

PEAK HOURS	AM PERIOD 6:00AM-12:00PM	Start	End	Volume	PM PERIOD 12:00PM-7:00PM	Start	End	Volume
		11:00	12:00	3742		12:45	13:45	0

Street Name-->	I-270				I-270				MD 187				MD 187				
HOUR	From North				From South				From East				From West				GRAND
ENDING	L	T	R	TOT	L	T	R	TOT	L	T	R	TOT	L	T	R	TOT	TOTAL
00:15				0				0				0				0	0
00:30				0				0				0				0	0
00:45				0				0				0				0	0
01:00				0				0				0				0	0
01:15				0				0				0				0	0
01:30				0				0				0				0	0
01:45				0				0				0				0	0
02:00				0				0				0				0	0
02:15				0				0				0				0	0
02:30				0				0				0				0	0
02:45				0				0				0				0	0
03:00				0				0				0				0	0
03:15				0				0				0				0	0
03:30				0				0				0				0	0
03:45				0				0				0				0	0
04:00				0				0				0				0	0
04:15				0				0				0				0	0
04:30				0				0				0				0	0
04:45				0				0				0				0	0
05:00				0				0				0				0	0
05:15				0				0				0				0	0
05:30				0				0				0				0	0
05:45				0				0				0				0	0
06:00				0				0				0				0	0
06:15				0				0				0				0	0
06:30				0				0				0				0	0
06:45				0				0				0				0	0
07:00				0				0				0				0	0
07:15				0				0				0				0	0
07:30				0				0				0				0	0
07:45				0				0				0				0	0
08:00				0				0				0				0	0
08:15				0				0				0				0	0
08:30				0				0				0				0	0
08:45				0				0				0				0	0
09:00				0				0				0				0	0
09:15				0				0				0				0	0
09:30				0				0				0				0	0
09:45				0				0				0				0	0
10:00				0				0				0				0	0
10:15	77	0	55	132	0	0	0	0	33	278	0	311	0	323	45	368	811
10:30	79	0	40	119	0	0	0	0	21	274	0	295	0	297	25	322	736
10:45	78	0	57	135	0	0	0	0	45	330	0	375	0	335	39	374	884
11:00	81	0	48	129	0	0	0	0	43	313	0	356	0	329	29	358	843
11:15	**69**	**0**	**42**	**111**	**0**	**0**	**0**	**0**	**34**	**332**	**0**	**366**	**0**	**375**	**48**	**423**	**900**
11:30	**69**	**0**	**49**	**118**	**0**	**0**	**0**	**0**	**45**	**334**	**0**	**379**	**0**	**389**	**39**	**428**	**925**
11:45	**59**	**0**	**49**	**108**	**0**	**0**	**0**	**0**	**49**	**346**	**0**	**395**	**0**	**378**	**37**	**415**	**918**
12:00	**79**	**0**	**60**	**139**	**0**	**0**	**0**	**0**	**31**	**372**	**0**	**403**	**0**	**412**	**45**	**457**	**999**
12:15	84	0	41	125	0	0	0	0	52	366	0	418	0	427	73	500	1043
12:30	86	0	44	130	0	0	0	0	46	366	0	412	0	435	48	483	1025
12:45	95	0	43	138	0	0	0	0	54	381	0	435	0	401	44	445	1018
13:00	**84**	**0**	**37**	**121**	**0**	**0**	**0**	**0**	**30**	**380**	**0**	**410**	**0**	**465**	**54**	**519**	**1050**
13:15	**68**	**0**	**40**	**108**	**0**	**0**	**0**	**0**	**18**	**383**	**0**	**401**	**0**	**402**	**58**	**460**	**969**
13:30	**94**	**0**	**53**	**147**	**0**	**0**	**0**	**0**	**57**	**405**	**0**	**462**	**0**	**419**	**57**	**476**	**1085**
13:45	**86**	**0**	**36**	**122**	**0**	**0**	**0**	**0**	**37**	**416**	**0**	**453**	**0**	**422**	**59**	**481**	**1056**
14:00	48	0	42	90	0	0	0	0	56	377	0	433	0	386	55	441	964
14:15				0				0				0				0	0
14:30				0				0				0				0	0
14:45				0				0				0				0	0
15:00				0				0				0				0	0
15:15				0				0				0				0	0
15:30				0				0				0				0	0
15:45				0				0				0				0	0
16:00				0				0				0				0	0
16:15				0				0				0				0	0
16:30				0				0				0				0	0
16:45				0				0				0				0	0
17:00				0				0				0				0	0
17:15				0				0				0				0	0
17:30				0				0				0				0	0
17:45				0				0				0				0	0
18:00				0				0				0				0	0
18:15				0				0				0				0	0
18:30				0				0				0				0	0
18:45				0				0				0				0	0
19:00				0				0				0				0	0
19:15				0				0				0				0	0
19:30				0				0				0				0	0
19:45				0				0				0				0	0
20:00				0				0				0				0	0
20:15				0				0				0				0	0
20:30				0				0				0				0	0
20:45				0				0				0				0	0
21:00				0				0				0				0	0
TOTAL	**1236**	**0**	**736**	**1972**	**0**	**0**	**0**	**0**	**651**	**5653**	**0**	**6304**	**0**	**6195**	**755**	**6950**	**15226**
AM Peak Vol	276	0	200	476	0	0	0	0	159	1384	0	1543	0	1554	169	1723	3742
PM Peak Vol	332	0	166	498	0	0	0	0	142	1584	0	1726	0	1708	228	1936	4160

Maryland State Highway Administration
Highway Information Services Division
Turning Counts Study - Field Sheet

Request No.:
Job No.:

Location: I-270 and MD 187 (1st intersection from the West)
Date: 11/19/2011 Saturday
Recorder: AM
Interval (dd) : 15
(In Minutes)

County: Montgomery
Town: North Bethesda
Weather: Sunny

PEAK HOURS	AM PERIOD 6:00AM-12:00PM	Start	End	Volume	PM PERIOD 12:00PM-7:00PM	Start	End	Volume
		11:00	12:00	3742		12:45	13:45	0

PEDESTRIAN SCHOOL CHILDREN & U-TURN BREAKDOWN

Hour	I-270			I-270			MD 187			MD 187		
Ending	S.C.	PED.	U.T.	S.C.	PED.	U.T.	S.C.	PED.	U.T.	S.C.	PED.	U.T.
00:15												
00:30												
00:45												
01:00												
01:15												
01:30												
01:45												
02:00												
02:15												
02:30												
02:45												
03:00												
03:15												
03:30												
03:45												
04:00												
04:15												
04:30												
04:45												
05:00												
05:15												
05:30												
05:45												
06:00												
06:15												
06:30												
06:45												
07:00												
07:15												
07:30												
07:45												
08:00												
08:15												
08:30												
08:45												
09:00												
09:15												
09:30												
09:45												
10:00												
10:15												
10:30												
10:45												
11:00												
11:15												
11:30												
11:45												
12:00												
12:15												
12:30												
12:45												
13:00												
13:15												
13:30												
13:45												
14:00												
14:15												
14:30												
14:45												
15:00												
15:15												
15:30												
15:45												
16:00												
16:15												
16:30												
16:45												
17:00												
17:15												
17:30												
17:45												
18:00												
18:15												
18:30												
18:45												
19:00												
19:15												
19:30												
19:45												
20:00												
20:15												
20:30												
20:45												
21:00												
TOTAL	**0**	**0**	**0**	**0**	**0**	**0**	**0**	**0**	**0**	**0**	**0**	**0**
AM Peak Vol	0	0	0	0	0	0	0	0	0	0	0	0
PM Peak Vol	0	0	0	0	0	0	0	0	0	0	0	0

Maryland State Highway Administration
Highway Information Services Division
Turning Counts Study - Field Sheet

Request No.:
Job No.:

Location: I-270 and MD 187 (1st intersection from the West)
Date: 11/19/2011 Saturday
Recorder: AM
Interval (dd) : 15
(In Minutes)

County: Montgomery
Town: North Bethesda
Weather: Sunny

PEAK HOURS	AM PERIOD 6:00AM-12:00PM	Start	End	Volume	PM PERIOD 12:00PM-7:00PM	Start	End	Volume
		11:00	12:00	3742		12:45	13:45	0

Turning Movement Summary:

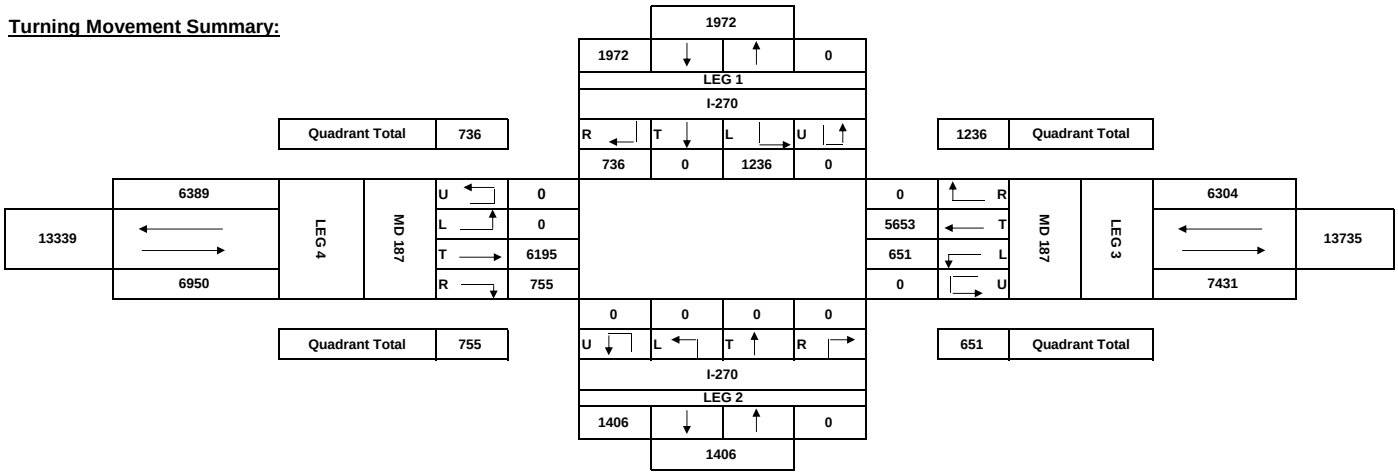

Comments:

AM Peak Hour :

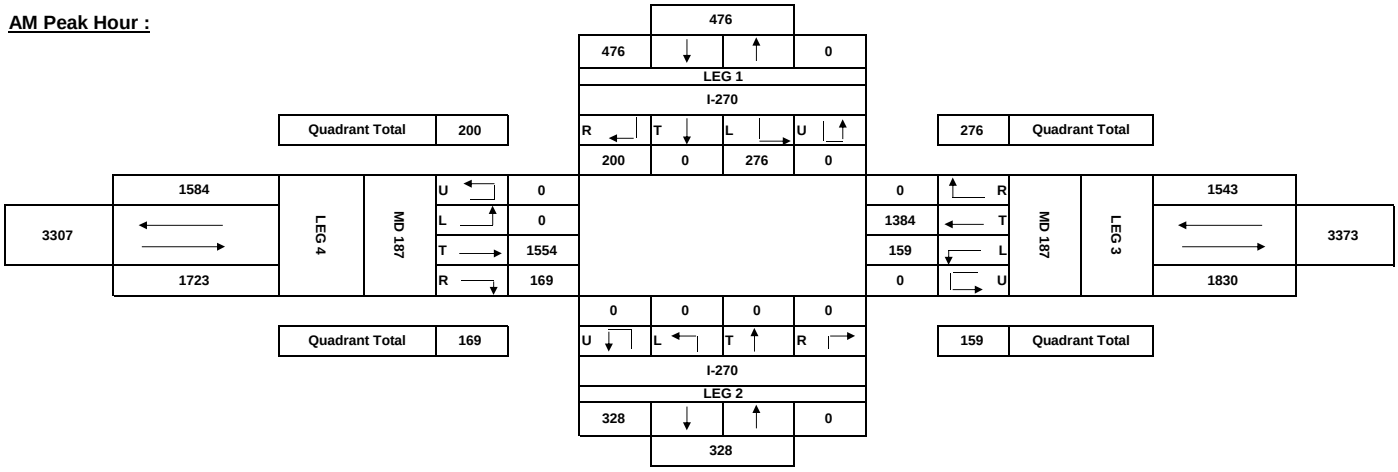

PM Peak Hour :

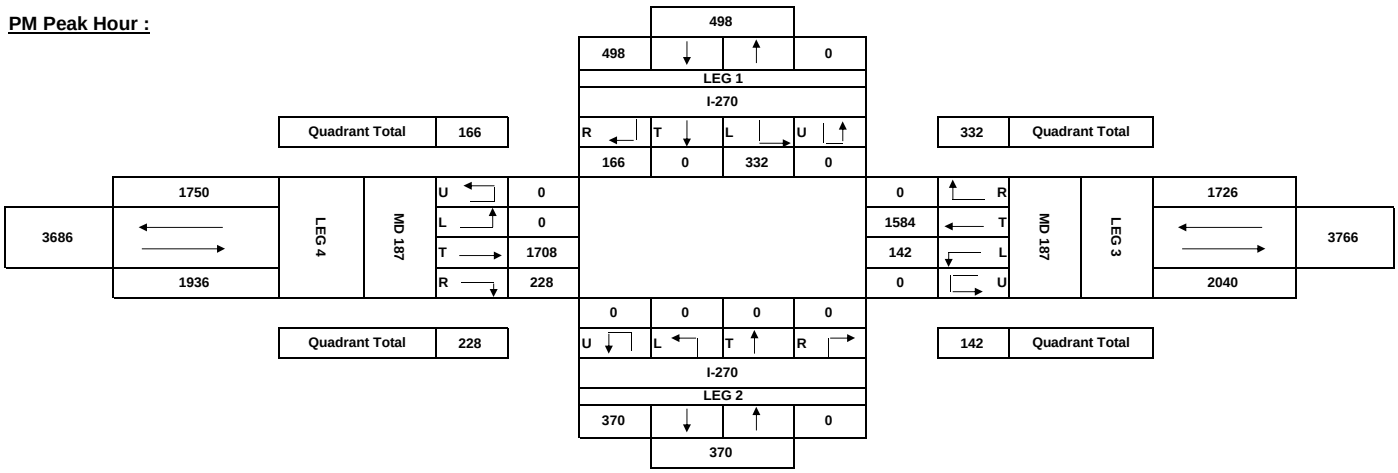

Maryland State Highway Administration
Highway Information Services Division
Turning Counts Study - Field Sheet

Request No.:
Job No.:

Location: I-270 and MD 187 (2nd intersection from the West)
Date: 11/19/2011 Saturday
Recorder: AM
Interval (dd) : 15 (In Minutes)

County: Montgomery
Town: North Bethesda
Weather: Sunny

PEAK HOURS	AM PERIOD 6:00AM-12:00PM	Start	End	Volume	PM PERIOD 12:00PM-7:00PM	Start	End	Volume
		11:00	12:00	4056		12:45	13:45	0

Street Name-->	I-270				I-270				MD 187				MD 187				
HOUR	From North				From South				From East				From West				GRAND
ENDING	L	T	R	TOT	L	T	R	TOT	L	T	R	TOT	L	T	R	TOT	TOTAL
00:15				0				0				0				0	0
00:30				0				0				0				0	0
00:45				0				0				0				0	0
01:00				0				0				0				0	0
01:15				0				0				0				0	0
01:30				0				0				0				0	0
01:45				0				0				0				0	0
02:00				0				0				0				0	0
02:15				0				0				0				0	0
02:30				0				0				0				0	0
02:45				0				0				0				0	0
03:00				0				0				0				0	0
03:15				0				0				0				0	0
03:30				0				0				0				0	0
03:45				0				0				0				0	0
04:00				0				0				0				0	0
04:15				0				0				0				0	0
04:30				0				0				0				0	0
04:45				0				0				0				0	0
05:00				0				0				0				0	0
05:15				0				0				0				0	0
05:30				0				0				0				0	0
05:45				0				0				0				0	0
06:00				0				0				0				0	0
06:15				0				0				0				0	0
06:30				0				0				0				0	0
06:45				0				0				0				0	0
07:00				0				0				0				0	0
07:15				0				0				0				0	0
07:30				0				0				0				0	0
07:45				0				0				0				0	0
08:00				0				0				0				0	0
08:15				0				0				0				0	0
08:30				0				0				0				0	0
08:45				0				0				0				0	0
09:00				0				0				0				0	0
09:15				0				0				0				0	0
09:30				0				0				0				0	0
09:45				0				0				0				0	0
10:00				0				0				0				0	0
10:15	0	0	0	0	28	0	55	83	0	264	84	348	41	358	0	399	830
10:30	0	0	0	0	28	0	54	82	0	258	94	352	32	370	0	402	836
10:45	0	0	0	0	33	4	42	79	0	305	84	389	37	359	0	396	864
11:00	0	0	0	0	33	0	62	95	0	292	125	417	49	384	0	433	945
11:15	**0**	**0**	**0**	**0**	**35**	**1**	**46**	**82**	**0**	**314**	**109**	**423**	**52**	**477**	**0**	**529**	**1034**
11:30	**0**	**0**	**0**	**0**	**30**	**0**	**49**	**79**	**0**	**308**	**119**	**427**	**66**	**382**	**0**	**448**	**954**
11:45	**0**	**0**	**0**	**0**	**37**	**0**	**41**	**78**	**0**	**350**	**103**	**453**	**57**	**400**	**0**	**457**	**988**
12:00	**0**	**0**	**0**	**0**	**45**	**5**	**66**	**116**	**0**	**339**	**103**	**442**	**50**	**472**	**0**	**522**	**1080**
12:15	0	0	0	0	33	3	45	81	0	333	97	430	57	483	0	540	1051
12:30	0	0	0	0	26	0	60	86	0	346	111	457	73	424	0	497	1040
12:45	0	0	0	0	33	5	45	83	0	345	118	463	69	436	0	505	1051
13:00	**0**	**0**	**0**	**0**	**39**	**0**	**45**	**84**	**0**	**329**	**151**	**480**	**69**	**440**	**0**	**509**	**1073**
13:15	**0**	**0**	**0**	**0**	**47**	**0**	**66**	**113**	**0**	**360**	**127**	**487**	**74**	**419**	**0**	**493**	**1093**
13:30	**0**	**0**	**0**	**0**	**34**	**0**	**50**	**84**	**0**	**361**	**110**	**471**	**69**	**463**	**0**	**532**	**1087**
13:45	**0**	**0**	**0**	**0**	**45**	**2**	**43**	**90**	**0**	**359**	**128**	**487**	**43**	**471**	**0**	**514**	**1091**
14:00	0	0	0	0	63	2	50	115	0	343	121	464	65	424	0	489	1068
14:15				0				0				0				0	0
14:30				0				0				0				0	0
14:45				0				0				0				0	0
15:00				0				0				0				0	0
15:15				0				0				0				0	0
15:30				0				0				0				0	0
15:45				0				0				0				0	0
16:00				0				0				0				0	0
16:15				0				0				0				0	0
16:30				0				0				0				0	0
16:45				0				0				0				0	0
17:00				0				0				0				0	0
17:15				0				0				0				0	0
17:30				0				0				0				0	0
17:45				0				0				0				0	0
18:00				0				0				0				0	0
18:15				0				0				0				0	0
18:30				0				0				0				0	0
18:45				0				0				0				0	0
19:00				0				0				0				0	0
19:15				0				0				0				0	0
19:30				0				0				0				0	0
19:45				0				0				0				0	0
20:00				0				0				0				0	0
20:15				0				0				0				0	0
20:30				0				0				0				0	0
20:45				0				0				0				0	0
21:00				0				0				0				0	0
TOTAL	**0**	**0**	**0**	**0**	**589**	**22**	**819**	**1430**	**0**	**5206**	**1784**	**6990**	**903**	**6762**	**0**	**7665**	**16085**
AM Peak Vol	0	0	0	0	147	6	202	355	0	1311	434	1745	225	1731	0	1956	4056
PM Peak Vol	0	0	0	0	165	2	204	371	0	1409	516	1925	255	1793	0	2048	4344

PEDESTRIAN SCHOOL CHILDREN & U-TURN BREAKDOWN

Hour	I-270			I-270			MD 187			MD 187		
Ending	S.C.	PED.	U.T.	S.C.	PED.	U.T.	S.C.	PED.	U.T.	S.C.	PED.	U.T.
00:15												
00:30												
00:45												
01:00												
01:15												

Maryland State Highway Administration
Highway Information Services Division
Turning Counts Study - Field Sheet

Request No.:
Job No.:

Location: I-270 and MD 187 (2nd intersection from the West)
Date: 11/19/2011 Saturday
Recorder: AM
Interval (dd) : 15 (In Minutes)

County: Montgomery
Town: North Bethesda
Weather: Sunny

	PEAK HOURS	AM PERIOD 6:00AM-12:00PM		Start 11:00	End 12:00	Volume 4056	PM PERIOD 12:00PM-7:00PM		Start 12:45	End 13:45	Volume 0			
01:30														
01:45														
02:00														
02:15														
02:30														
02:45														
03:00														
03:15														
03:30														
03:45														
04:00														
04:15														
04:30														
04:45														
05:00														
05:15														
05:30														
05:45														
06:00														
06:15														
06:30														
06:45														
07:00														
07:15														
07:30														
07:45														
08:00														
08:15														
08:30														
08:45														
09:00														
09:15														
09:30														
09:45														
10:00														
10:15														
10:30														
10:45														
11:00														
11:15														
11:30														
11:45														
12:00														
12:15														
12:30														
12:45														
13:00														
13:15														
13:30														
13:45														
14:00														
14:15														
14:30														
14:45														
15:00														
15:15														
15:30														
15:45														
16:00														
16:15														
16:30														
16:45														
17:00														
17:15														
17:30														
17:45														
18:00														
18:15														
18:30														
18:45														
19:00														
19:15														
19:30														
19:45														
20:00														
20:15														
20:30														
20:45														
21:00														
TOTAL	**0**	**0**	**0**		**0**	**0**	**0**		**0**	**0**	**0**	**0**	**0**	**0**
AM Peak Vol	0	0	0		0	0	0		0	0	0	0	0	0
PM Peak Vol	0	0	0		0	0	0		0	0	0	0	0	0

Turning Movement Summary:

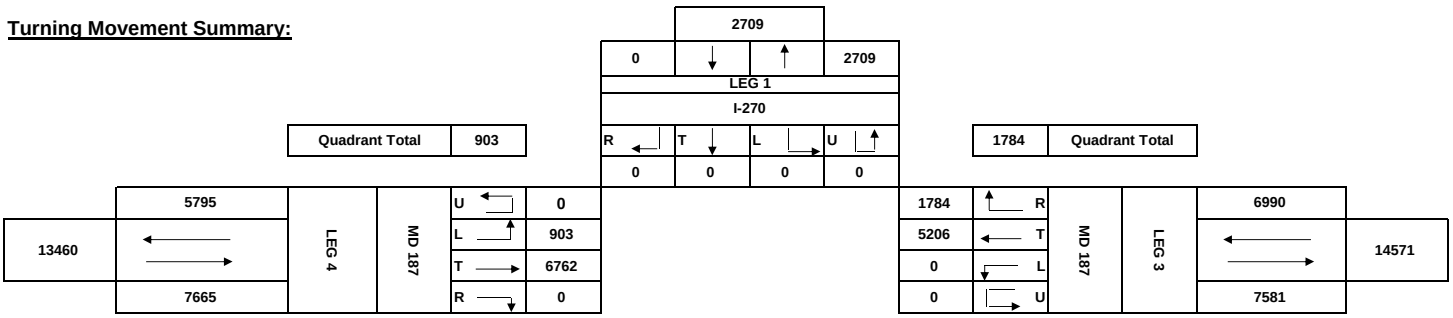

Maryland State Highway Administration
Highway Information Services Division
Turning Counts Study - Field Sheet

Request No.:
Job No.:

Location: I-270 and MD 187 (2nd intersection from the West)
Date: 11/19/2011 Saturday
Recorder: AM
Interval (dd) : 15
(In Minutes)

County: Montgomery
Town: North Bethesda
Weather: Sunny

PEAK HOURS	AM PERIOD 6:00AM-12:00PM	Start	End	Volume	PM PERIOD 12:00PM-7:00PM	Start	End	Volume
		11:00	12:00	4056		12:45	13:45	0

				0	589	22	819			
	Quadrant Total	589		U	L	T	R		819	Quadrant Total
				I-270						
				LEG 2						
				0			1430			
					1430					

Comments:

AM Peak Hour :

						665								
					0			665						
					LEG 1									
					I-270									
	Quadrant Total	225			R	T	L	U		434	Quadrant Total			
					0	0	0	0						
	1458			U	0				434	R			1745	
3414		LEG 4	MD 187	L	225				1311	T	MD 187	LEG 3		3678
				T	1731				0	L				
	1956			R	0				0	U			1933	
					0	147	6	202						
	Quadrant Total	147		U	L	T	R		202	Quadrant Total				
				I-270										
				LEG 2										
				0			355							
					355									

PM Peak Hour :

						773								
					0			773						
					LEG 1									
					I-270									
	Quadrant Total	255			R	T	L	U		516	Quadrant Total			
					0	0	0	0						
	1574			U	0				516	R			1925	
3622		LEG 4	MD 187	L	255				1409	T	MD 187	LEG 3		3922
				T	1793				0	L				
	2048			R	0				0	U			1997	
					0	165	2	204						
	Quadrant Total	165		U	L	T	R		204	Quadrant Total				
				I-270										
				LEG 2										
				0			371							
					371									

Maryland State Highway Administration
Highway Information Services Division
Turning Counts Study - Field Sheet

Request No.:
Job No.:

Location: MD 187 @ Edson Lane
Date: 11/5/2011 Saturday
Recorder: AM
Interval (dd) : 15
(In Minutes)

County: Montgomery
Town: North Bethesda
Weather: Sunny

PEAK HOURS	AM PERIOD 6:00AM-12:00PM	Start	End	Volume	PM PERIOD 12:00PM-7:00PM	Start	End	Volume
		11:00	12:00	2565		13:00	14:00	0

Street Name-->	MD 187				MD 187				Edson Lane				Edson Lane				
HOUR	From North				From South				From East				From West				GRAND
ENDING	L	T	R	TOT	L	T	R	TOT	L	T	R	TOT	L	T	R	TOT	TOTAL
00:15				0				0				0				0	0
00:30				0				0				0				0	0
00:45				0				0				0				0	0
01:00				0				0				0				0	0
01:15				0				0				0				0	0
01:30				0				0				0				0	0
01:45				0				0				0				0	0
02:00				0				0				0				0	0
02:15				0				0				0				0	0
02:30				0				0				0				0	0
02:45				0				0				0				0	0
03:00				0				0				0				0	0
03:15				0				0				0				0	0
03:30				0				0				0				0	0
03:45				0				0				0				0	0
04:00				0				0				0				0	0
04:15				0				0				0				0	0
04:30				0				0				0				0	0
04:45				0				0				0				0	0
05:00				0				0				0				0	0
05:15				0				0				0				0	0
05:30				0				0				0				0	0
05:45				0				0				0				0	0
06:00				0				0				0				0	0
06:15				0				0				0				0	0
06:30				0				0				0				0	0
06:45				0				0				0				0	0
07:00				0				0				0				0	0
07:15				0				0				0				0	0
07:30				0				0				0				0	0
07:45				0				0				0				0	0
08:00				0				0				0				0	0
08:15				0				0				0				0	0
08:30				0				0				0				0	0
08:45				0				0				0				0	0
09:00				0				0				0				0	0
09:15				0				0				0				0	0
09:30				0				0				0				0	0
09:45				0				0				0				0	0
10:00				0				0				0				0	0
10:15	2	214	0	216	2	218	38	258	17	0	5	22	1	0	0	1	497
10:30	5	191	2	198	0	239	34	273	24	0	3	27	3	0	1	4	502
10:45	8	225	2	235	4	255	40	299	26	0	8	34	1	0	0	1	569
11:00	8	249	3	260	2	293	39	334	24	0	4	28	2	0	1	3	625
11:15	**4**	**234**	**1**	**239**	**2**	**292**	**26**	**320**	**23**	**0**	**9**	**32**	**3**	**0**	**3**	**6**	**597**
11:30	**8**	**252**	**0**	**260**	**2**	**282**	**36**	**320**	**27**	**0**	**6**	**33**	**2**	**0**	**2**	**4**	**617**
11:45	**7**	**280**	**3**	**290**	**4**	**294**	**34**	**332**	**21**	**0**	**6**	**27**	**1**	**0**	**2**	**3**	**652**
12:00	**13**	**314**	**2**	**329**	**4**	**291**	**34**	**329**	**31**	**0**	**6**	**37**	**3**	**0**	**1**	**4**	**699**
12:15	6	309	4	319	1	285	46	332	40	0	3	43	7	0	3	10	704
12:30	5	344	4	353	3	312	52	367	39	0	7	46	2	0	1	3	769
12:45	9	296	5	310	2	339	45	386	32	0	9	41	0	0	2	2	739
13:00	7	335	3	345	0	314	48	362	30	0	14	44	1	0	1	2	753
13:15	**8**	**346**	**1**	**355**	**3**	**310**	**47**	**360**	**37**	**0**	**5**	**42**	**1**	**0**	**4**	**5**	**762**
13:30	**7**	**331**	**3**	**341**	**2**	**330**	**46**	**378**	**26**	**0**	**7**	**33**	**4**	**0**	**2**	**6**	**758**
13:45	**8**	**328**	**3**	**339**	**1**	**341**	**37**	**379**	**24**	**0**	**4**	**28**	**2**	**0**	**4**	**6**	**752**
14:00	**6**	**341**	**3**	**350**	**3**	**320**	**65**	**388**	**29**	**0**	**4**	**33**	**0**	**0**	**0**	**0**	**771**
14:15				0				0				0				0	0
14:30				0				0				0				0	0
14:45				0				0				0				0	0
15:00				0				0				0				0	0
15:15				0				0				0				0	0
15:30				0				0				0				0	0
15:45				0				0				0				0	0
16:00				0				0				0				0	0
16:15				0				0				0				0	0
16:30				0				0				0				0	0
16:45				0				0				0				0	0
17:00				0				0				0				0	0
17:15				0				0				0				0	0
17:30				0				0				0				0	0
17:45				0				0				0				0	0
18:00				0				0				0				0	0
18:15				0				0				0				0	0
18:30				0				0				0				0	0
18:45				0				0				0				0	0
19:00				0				0				0				0	0
19:15				0				0				0				0	0
19:30				0				0				0				0	0
19:45				0				0				0				0	0
20:00				0				0				0				0	0
20:15				0				0				0				0	0
20:30				0				0				0				0	0
20:45				0				0				0				0	0
21:00				0				0				0				0	0
TOTAL	**111**	**4589**	**39**	**4739**	**35**	**4715**	**667**	**5417**	**450**	**0**	**100**	**550**	**33**	**0**	**27**	**60**	**10766**
AM Peak Vol	32	1080	6	1118	12	1159	130	1301	102	0	27	129	9	0	8	17	2565
PM Peak Vol	29	1346	10	1385	9	1301	195	1505	116	0	20	136	7	0	10	17	3043

Maryland State Highway Administration
Highway Information Services Division
Turning Counts Study - Field Sheet

Request No.:
Job No.:

Location: MD 187 @ Edson Lane
Date: 11/5/2011 Saturday
Recorder: AM
Interval (dd) : 15
(In Minutes)

County: Montgomery
Town: North Bethesda
Weather: Sunny

PEAK HOURS	AM PEIOD 6:00AM-12:00PM	Start	End	Volume	PM PEIOD 12:00PM-7:00PM	Start	End	Volume
		11:00	12:00	2565		13:00	14:00	0

PEDESTRIAN SCHOOL CHILDREN & U-TURN BREAKDOWN

Hour Ending	MD 187			MD 187			Edson Lane			Edson Lane		
	S.C.	PED.	U.T.	S.C.	PED.	U.T.	S.C.	PED.	U.T.	S.C.	PED.	U.T.
00:15												
00:30												
00:45												
01:00												
01:15												
01:30												
01:45												
02:00												
02:15												
02:30												
02:45												
03:00												
03:15												
03:30												
03:45												
04:00												
04:15												
04:30												
04:45												
05:00												
05:15												
05:30												
05:45												
06:00												
06:15												
06:30												
06:45												
07:00												
07:15												
07:30												
07:45												
08:00												
08:15												
08:30												
08:45												
09:00												
09:15												
09:30												
09:45												
10:00						2						
10:15						1						
10:30						1						
10:45						0						
11:00						1						
11:15						1						
11:30						0						
11:45						0						
12:00						3						
12:15						3						
12:30						1						
12:45						2						
13:00						1						
13:15						1						
13:30						1						
13:45						1						
14:00												
14:15												
14:30												
14:45												
15:00												
15:15												
15:30												
15:45												
16:00												
16:15												
16:30												
16:45												
17:00												
17:15												
17:30												
17:45												
18:00												
18:15												
18:30												
18:45												
19:00												
19:15												
19:30												
19:45												
20:00												
20:15												
20:30												
20:45												
21:00												
TOTAL	**0**	**0**	**0**	**0**	**0**	**19**	**0**	**0**	**0**	**0**	**0**	**0**
AM Peak Vol	0	0	0	0	0	4	0	0	0	0	0	0
PM Peak Vol	0	0	0	0	0	3	0	0	0	0	0	0

Maryland State Highway Administration
Highway Information Services Division
Turning Counts Study - Field Sheet

Request No.:
Job No.:

Location: MD 187 @ Edson Lane
Date: 11/5/2011 Saturday
Recorder: AM
Interval (dd) : 15
(In Minutes)

County: Montgomery
Town: North Bethesda
Weather: Sunny

PEAK HOURS	AM PERIOD 6:00AM-12:00PM	Start	End	Volume	PM PERIOD 12:00PM-7:00PM	Start	End	Volume
		11:00	12:00	2565		13:00	14:00	0

Turning Movement Summary:

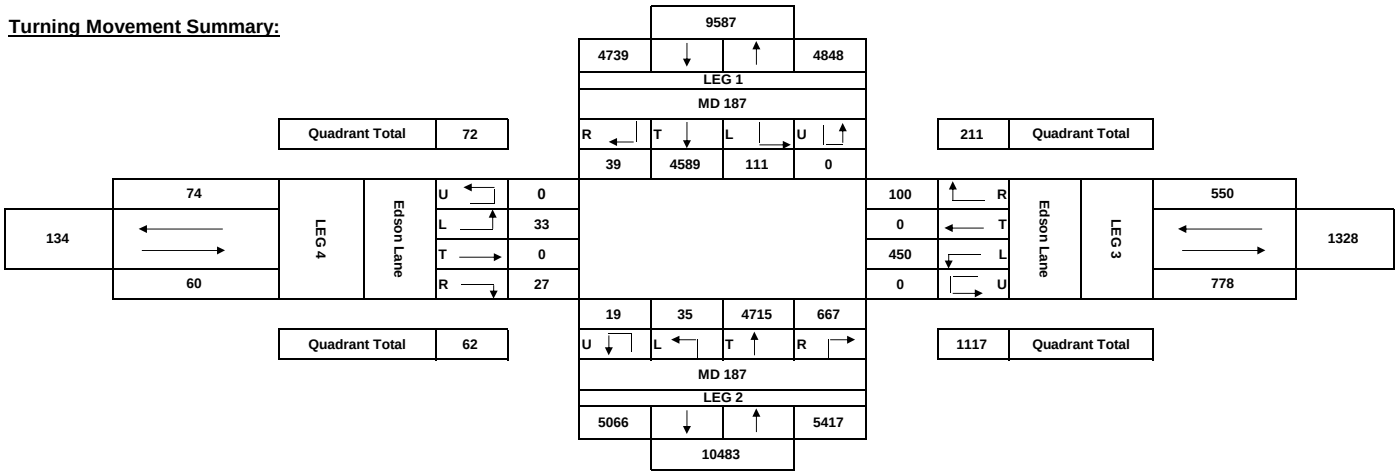

Comments:

AM Peak Hour :

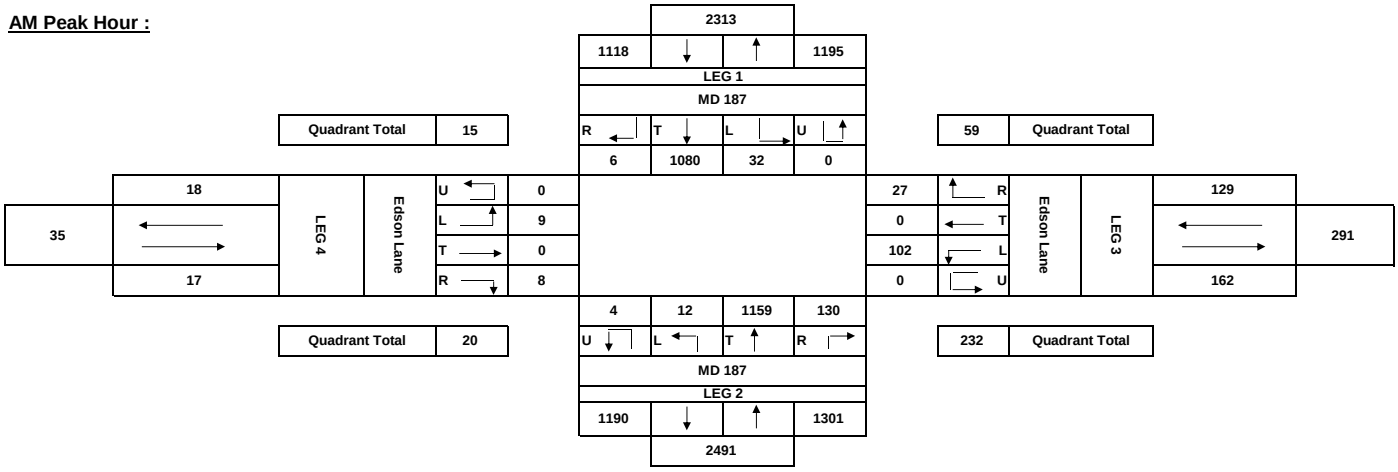

PM Peak Hour :

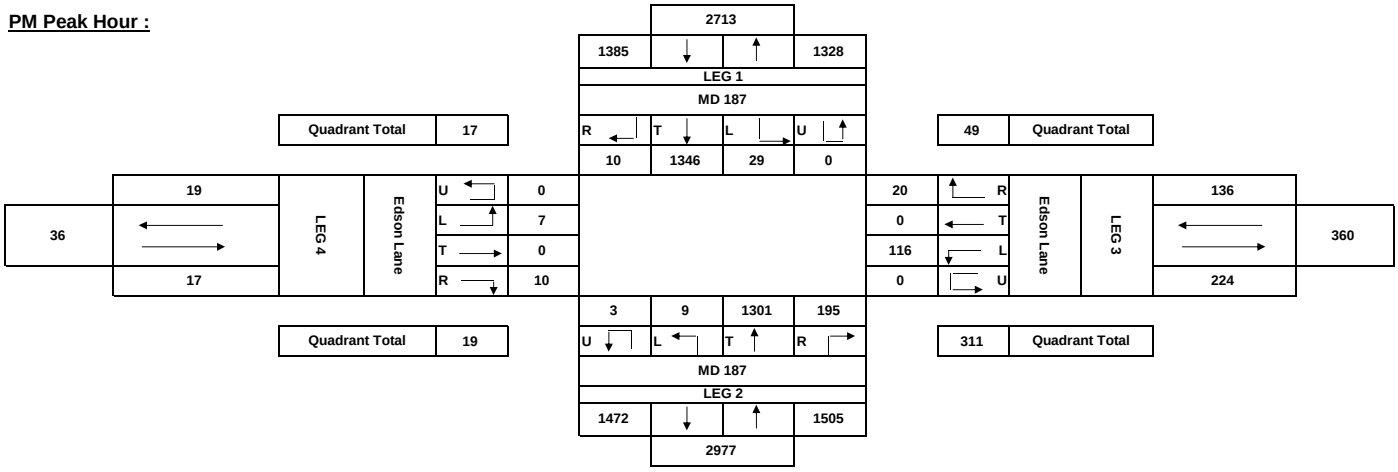

Maryland State Highway Administration
Highway Information Services Division
Turning Counts Study - Field Sheet

Request No.:
Job No.:

Location: MD 187 @ Tuckerman Lane
Date: 11/19/2011 Saturday
Recorder: AM
Interval (dd) : 15
(In Minutes)

County: Montgomery
Town: North Bethesda
Weather: Sunny

PEAK HOURS	AM PERIOD 6:00AM-12:00PM	Start	End	Volume	PM PERIOD 12:00PM-7:00PM	Start	End	Volume
		11:00	12:00	4608		12:00	13:00	0

Street Name-->	MD 187				MD 187				Tuckerman Lane				Tuckerman Lane				
HOUR	From North				From South				From East				From West				GRAND
ENDING	L	T	R	TOT	L	T	R	TOT	L	T	R	TOT	L	T	R	TOT	TOTAL
00:15				0				0				0				0	0
00:30				0				0				0				0	0
00:45				0				0				0				0	0
01:00				0				0				0				0	0
01:15				0				0				0				0	0
01:30				0				0				0				0	0
01:45				0				0				0				0	0
02:00				0				0				0				0	0
02:15				0				0				0				0	0
02:30				0				0				0				0	0
02:45				0				0				0				0	0
03:00				0				0				0				0	0
03:15				0				0				0				0	0
03:30				0				0				0				0	0
03:45				0				0				0				0	0
04:00				0				0				0				0	0
04:15				0				0				0				0	0
04:30				0				0				0				0	0
04:45				0				0				0				0	0
05:00				0				0				0				0	0
05:15				0				0				0				0	0
05:30				0				0				0				0	0
05:45				0				0				0				0	0
06:00				0				0				0				0	0
06:15				0				0				0				0	0
06:30				0				0				0				0	0
06:45				0				0				0				0	0
07:00				0				0				0				0	0
07:15				0				0				0				0	0
07:30				0				0				0				0	0
07:45				0				0				0				0	0
08:00				0				0				0				0	0
08:15				0				0				0				0	0
08:30				0				0				0				0	0
08:45				0				0				0				0	0
09:00				0				0				0				0	0
09:15				0				0				0				0	0
09:30				0				0				0				0	0
09:45				0				0				0				0	0
10:00				0				0				0				0	0
10:15	10	197	32	239	45	270	51	366	118	49	9	176	44	61	25	130	911
10:30	15	207	61	283	45	273	80	398	127	53	16	196	67	46	7	120	997
10:45	12	272	56	340	29	286	61	376	107	52	21	180	62	25	25	112	1008
11:00	20	240	60	320	38	310	70	418	138	46	33	217	77	32	40	149	1104
11:15	**15**	**289**	**69**	**373**	**48**	**310**	**70**	**428**	**124**	**51**	**12**	**187**	**54**	**35**	**21**	**110**	**1098**
11:30	**54**	**254**	**51**	**359**	**38**	**277**	**73**	**388**	**121**	**85**	**26**	**232**	**64**	**36**	**41**	**141**	**1120**
11:45	**15**	**326**	**58**	**399**	**40**	**325**	**81**	**446**	**141**	**48**	**12**	**201**	**64**	**39**	**37**	**140**	**1186**
12:00	**13**	**296**	**72**	**381**	**39**	**330**	**106**	**475**	**120**	**63**	**15**	**198**	**70**	**53**	**27**	**150**	**1204**
12:15	**18**	**326**	**75**	**419**	**61**	**340**	**110**	**511**	**101**	**46**	**20**	**167**	**73**	**56**	**29**	**158**	**1255**
12:30	**19**	**330**	**73**	**422**	**44**	**319**	**105**	**468**	**128**	**62**	**14**	**204**	**83**	**48**	**19**	**150**	**1244**
12:45	**15**	**345**	**62**	**422**	**69**	**322**	**105**	**496**	**115**	**51**	**18**	**184**	**65**	**47**	**22**	**134**	**1236**
13:00	**15**	**341**	**65**	**421**	**55**	**338**	**130**	**523**	**112**	**58**	**8**	**178**	**72**	**56**	**31**	**159**	**1281**
13:15	14	351	65	430	51	311	118	480	112	53	17	182	57	50	29	136	1228
13:30	17	335	83	435	46	313	108	467	129	66	8	203	70	51	31	152	1257
13:45	15	361	73	449	35	313	113	461	120	45	6	171	68	43	26	137	1218
14:00	27	308	55	390	40	310	86	436	124	49	13	186	99	71	31	201	1213
14:15				0				0				0				0	0
14:30				0				0				0				0	0
14:45				0				0				0				0	0
15:00				0				0				0				0	0
15:15				0				0				0				0	0
15:30				0				0				0				0	0
15:45				0				0				0				0	0
16:00				0				0				0				0	0
16:15				0				0				0				0	0
16:30				0				0				0				0	0
16:45				0				0				0				0	0
17:00				0				0				0				0	0
17:15				0				0				0				0	0
17:30				0				0				0				0	0
17:45				0				0				0				0	0
18:00				0				0				0				0	0
18:15				0				0				0				0	0
18:30				0				0				0				0	0
18:45				0				0				0				0	0
19:00				0				0				0				0	0
19:15				0				0				0				0	0
19:30				0				0				0				0	0
19:45				0				0				0				0	0
20:00				0				0				0				0	0
20:15				0				0				0				0	0
20:30				0				0				0				0	0
20:45				0				0				0				0	0
21:00				0				0				0				0	0
TOTAL	**294**	**4778**	**1010**	**6082**	**723**	**4947**	**1467**	**7137**	**1937**	**877**	**248**	**3062**	**1089**	**749**	**441**	**2279**	**18560**
AM Peak Vol	97	1165	250	1512	165	1242	330	1737	506	247	65	818	252	163	126	541	4608
PM Peak Vol	67	1342	275	1684	229	1319	450	1998	456	217	60	733	293	207	101	601	5016

Maryland State Highway Administration
Highway Information Services Division
Turning Counts Study - Field Sheet

Request No.:
Job No.:

Location: MD 187 @ Tuckerman Lane
Date: 11/19/2011 Saturday
Recorder: AM
Interval (dd) : 15
(In Minutes)

County: Montgomery
Town: North Bethesda
Weather: Sunny

PEAK HOURS	AM PERIOD 6:00AM-12:00PM	Start	End	Volume	PM PERIOD 12:00PM-7:00PM	Start	End	Volume
		11:00	12:00	4608		12:00	13:00	0

PEDESTRIAN SCHOOL CHILDREN & U-TURN BREAKDOWN

Hour Ending	MD 187			MD 187			Tuckerman Lane			Tuckerman Lane		
	S.C.	PED.	U.T.	S.C.	PED.	U.T.	S.C.	PED.	U.T.	S.C.	PED.	U.T.
00:15												
00:30												
00:45												
01:00												
01:15												
01:30												
01:45												
02:00												
02:15												
02:30												
02:45												
03:00												
03:15												
03:30												
03:45												
04:00												
04:15												
04:30												
04:45												
05:00												
05:15												
05:30												
05:45												
06:00												
06:15												
06:30												
06:45												
07:00												
07:15												
07:30												
07:45												
08:00												
08:15												
08:30												
08:45												
09:00												
09:15												
09:30												
09:45												
10:00												
10:15			10			0			0			0
10:30			0			0			0			0
10:45			0			0			0			0
11:00			8			0			5			0
11:15			0			1			0			0
11:30			0			0			0			1
11:45			0			0			0			1
12:00			0			0			0			0
12:15			0			0			0			0
12:30			0			1			0			0
12:45			0			0			0			0
13:00			0			0			0			0
13:15			1			0			3			0
13:30			0			0			0			0
13:45			2			0			0			0
14:00			0			1			0			1
14:15			0						0			
14:30												
14:45												
15:00												
15:15												
15:30												
15:45												
16:00												
16:15												
16:30												
16:45												
17:00												
17:15												
17:30												
17:45												
18:00												
18:15												
18:30												
18:45												
19:00												
19:15												
19:30												
19:45												
20:00												
20:15												
20:30												
20:45												
21:00												
TOTAL	**0**	**0**	**21**	**0**	**0**	**3**	**0**	**0**	**8**	**0**	**0**	**3**
AM Peak Vol	0	0	0	0	0	1	0	0	0	0	0	2
PM Peak Vol	0	0	1	0	0	1	0	0	0	0	0	0

Maryland State Highway Administration
Highway Information Services Division
Turning Counts Study - Field Sheet

Request No.:
Job No.:

Location: MD 187 @ Tuckerman Lane
Date: 11/19/2011 Saturday
Recorder: AM
Interval (dd) : 15
(In Minutes)

County: Montgomery
Town: North Bethesda
Weather: Sunny

PEAK HOURS	AM PERIOD 6:00AM-12:00PM	Start	End	Volume	PM PERIOD 12:00PM-7:00PM	Start	End	Volume
		11:00	12:00	4608		12:00	13:00	0

Turning Movement Summary:

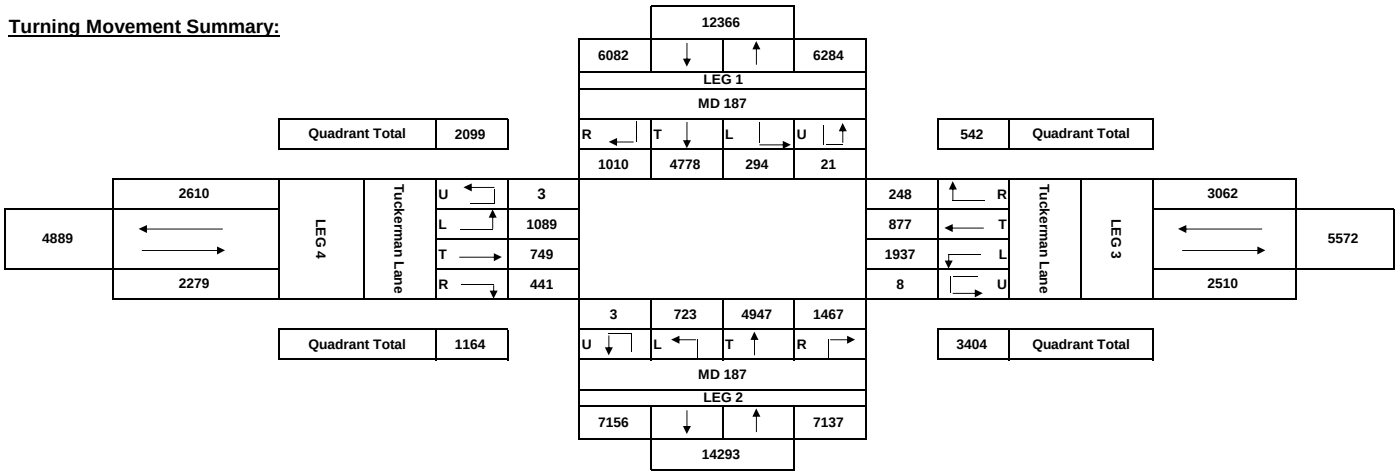

Comments:

AM Peak Hour :

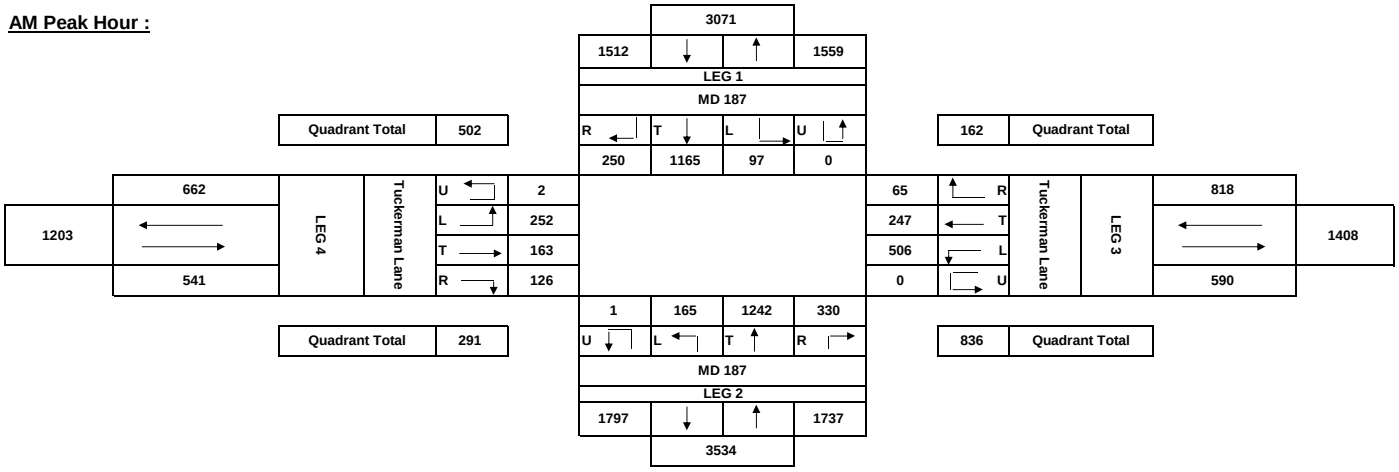

PM Peak Hour :

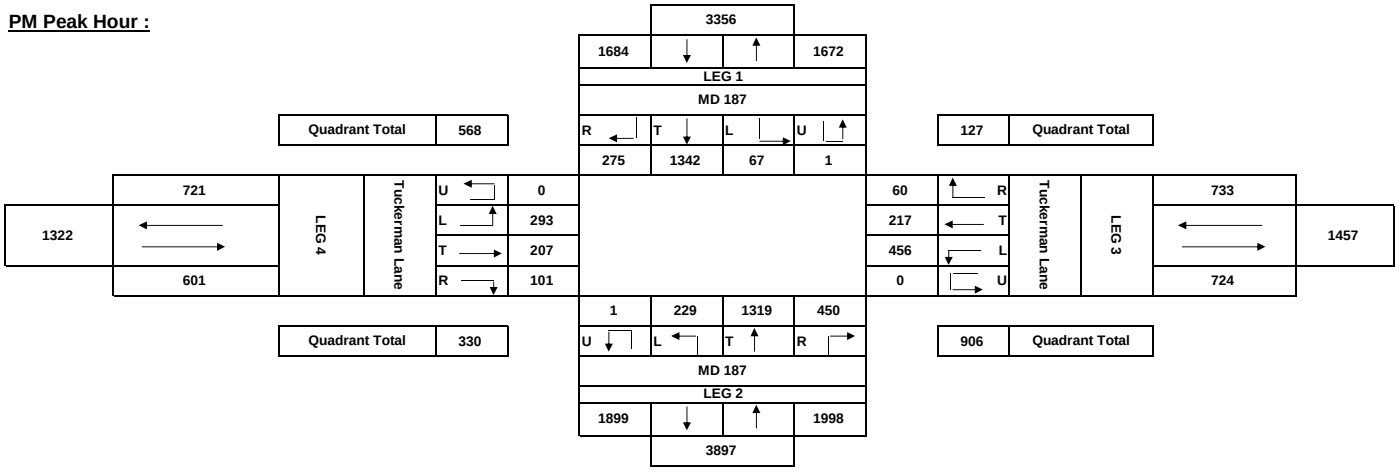

Maryland State Highway Administration
Highway Information Services Division
Turning Counts Study - Field Sheet

Request No.:
Job No.:

Location: MD 187 & Executive Boulevard
Date: 10/8/2011 Saturday
Recorder: AM
Interval (dd) : 15
(In Minutes)

County: Montgomery
Town: North Bethesda
Weather: Sunny

PEAK HOURS	AM PERIOD 6:00AM-12:00PM	Start	End	Volume	PM PERIOD 12:00PM-7:00PM	Start	End	Volume
		11:00	12:00	2331		12:45	13:45	0

Street Name-->	MD 187				MD 187				Executive Boulevard				Executive Boulevard				
HOUR	From North				From South				From East				From West				GRAND
ENDING	L	T	R	TOT	L	T	R	TOT	L	T	R	TOT	L	T	R	TOT	TOTAL
00:15				0				0				0				0	0
00:30				0				0				0				0	0
00:45				0				0				0				0	0
01:00				0				0				0				0	0
01:15				0				0				0				0	0
01:30				0				0				0				0	0
01:45				0				0				0				0	0
02:00				0				0				0				0	0
02:15				0				0				0				0	0
02:30				0				0				0				0	0
02:45				0				0				0				0	0
03:00				0				0				0				0	0
03:15				0				0				0				0	0
03:30				0				0				0				0	0
03:45				0				0				0				0	0
04:00				0				0				0				0	0
04:15				0				0				0				0	0
04:30				0				0				0				0	0
04:45				0				0				0				0	0
05:00				0				0				0				0	0
05:15				0				0				0				0	0
05:30				0				0				0				0	0
05:45				0				0				0				0	0
06:00				0				0				0				0	0
06:15				0				0				0				0	0
06:30				0				0				0				0	0
06:45				0				0				0				0	0
07:00				0				0				0				0	0
07:15				0				0				0				0	0
07:30				0				0				0				0	0
07:45				0				0				0				0	0
08:00				0				0				0				0	0
08:15				0				0				0				0	0
08:30				0				0				0				0	0
08:45				0				0				0				0	0
09:00				0				0				0				0	0
09:15				0				0				0				0	0
09:30				0				0				0				0	0
09:45				0				0				0				0	0
10:00				0				0				0				0	0
10:15	5	127	27	159	70	104	2	176	0	29	11	40	13	30	30	73	448
10:30	3	135	31	169	81	159	1	241	0	30	16	46	26	30	39	95	551
10:45	9	140	38	187	81	167	3	251	0	28	19	47	16	28	42	86	571
11:00	4	161	24	189	58	172	1	231	0	40	8	48	30	59	34	123	591
11:15	**4**	**145**	**39**	**188**	**58**	**152**	**5**	**215**	**1**	**32**	**14**	**47**	**14**	**35**	**46**	**95**	**545**
11:30	**6**	**160**	**46**	**212**	**55**	**179**	**2**	**236**	**0**	**29**	**15**	**44**	**29**	**43**	**56**	**128**	**620**
11:45	**8**	**161**	**24**	**193**	**53**	**146**	**2**	**201**	**0**	**34**	**17**	**51**	**25**	**32**	**51**	**108**	**553**
12:00	**5**	**197**	**20**	**222**	**41**	**166**	**3**	**210**	**2**	**37**	**10**	**49**	**26**	**46**	**60**	**132**	**613**
12:15	6	174	45	225	45	176	4	225	0	38	11	49	21	39	53	113	612
12:30	7	150	19	176	45	176	2	223	1	32	13	46	31	41	59	131	576
12:45	1	204	25	230	61	182	0	243	0	30	9	39	27	50	72	149	661
13:00	**10**	**168**	**34**	**212**	**44**	**170**	**6**	**220**	**1**	**35**	**13**	**49**	**33**	**60**	**82**	**175**	**656**
13:15	**4**	**233**	**37**	**274**	**55**	**186**	**1**	**242**	**2**	**48**	**12**	**62**	**26**	**48**	**72**	**146**	**724**
13:30	**5**	**185**	**44**	**234**	**57**	**179**	**1**	**237**	**1**	**27**	**11**	**39**	**20**	**61**	**71**	**152**	**662**
13:45	**8**	**229**	**22**	**259**	**62**	**180**	**3**	**245**	**0**	**39**	**16**	**55**	**21**	**41**	**78**	**140**	**699**
14:00	3	59	18	80	24	41	4	69	2	20	10	32	16	38	29	83	264
14:15				0				0				0				0	0
14:30				0				0				0				0	0
14:45				0				0				0				0	0
15:00				0				0				0				0	0
15:15				0				0				0				0	0
15:30				0				0				0				0	0
15:45				0				0				0				0	0
16:00				0				0				0				0	0
16:15				0				0				0				0	0
16:30				0				0				0				0	0
16:45				0				0				0				0	0
17:00				0				0				0				0	0
17:15				0				0				0				0	0
17:30				0				0				0				0	0
17:45				0				0				0				0	0
18:00				0				0				0				0	0
18:15				0				0				0				0	0
18:30				0				0				0				0	0
18:45				0				0				0				0	0
19:00				0				0				0				0	0
19:15				0				0				0				0	0
19:30				0				0				0				0	0
19:45				0				0				0				0	0
20:00				0				0				0				0	0
20:15				0				0				0				0	0
20:30				0				0				0				0	0
20:45				0				0				0				0	0
21:00				0				0				0				0	0
TOTAL	**88**	**2628**	**493**	**3209**	**890**	**2535**	**40**	**3465**	**10**	**528**	**205**	**743**	**374**	**681**	**874**	**1929**	**9346**
AM Peak Vol	23	663	129	815	207	643	12	862	3	132	56	191	94	156	213	463	2331
PM Peak Vol	27	815	137	979	218	715	11	944	4	149	52	205	100	210	303	613	2741

Maryland State Highway Administration
Highway Information Services Division
Turning Counts Study - Field Sheet

Request No.:
Job No.:

Location: MD 187 & Executive Boulevard
Date: 10/8/2011 Saturday
Recorder: AM
Interval (dd) : 15
(In Minutes)

County: Montgomery
Town: North Bethesda
Weather: Sunny

PEAK HOURS	AM PERIOD 6:00AM-12:00PM	Start	End	Volume	PM PERIOD 12:00PM-7:00PM	Start	End	Volume
		11:00	12:00	2331		12:45	13:45	0

PEDESTRIAN SCHOOL CHILDREN & U-TURN BREAKDOWN

Hour	MD 187			MD 187			Executive Boulevard			Executive Boulevard		
Ending	S.C.	PED.	U.T.	S.C.	PED.	U.T.	S.C.	PED.	U.T.	S.C.	PED.	U.T.
00:15												
00:30												
00:45												
01:00												
01:15												
01:30												
01:45												
02:00												
02:15												
02:30												
02:45												
03:00												
03:15												
03:30												
03:45												
04:00												
04:15												
04:30												
04:45												
05:00												
05:15												
05:30												
05:45												
06:00												
06:15												
06:30												
06:45												
07:00												
07:15												
07:30												
07:45												
08:00												
08:15												
08:30												
08:45												
09:00												
09:15												
09:30												
09:45												
10:00												
10:15												
10:30			1			0						1
10:45			0			0						0
11:00			2			3						1
11:15			1			1						0
11:30			1			2						0
11:45			2			3						1
12:00			0			1						0
12:15			0			0						2
12:30			1			0						0
12:45			3			2						1
13:00			0			2						0
13:15			2			1						0
13:30			2			2						0
13:45			1			1						
14:00												
14:15												
14:30												
14:45												
15:00												
15:15												
15:30												
15:45												
16:00												
16:15												
16:30												
16:45												
17:00												
17:15												
17:30												
17:45												
18:00												
18:15												
18:30												
18:45												
19:00												
19:15												
19:30												
19:45												
20:00												
20:15												
20:30												
20:45												
21:00												
TOTAL	**0**	**0**	**16**	**0**	**0**	**18**	**0**	**0**	**0**	**0**	**0**	**6**
AM Peak Vol	0	0	4	0	0	7	0	0	0	0	0	1
PM Peak Vol	0	0	5	0	0	6	0	0	0	0	0	0

Maryland State Highway Administration
Highway Information Services Division
Turning Counts Study - Field Sheet

Request No.:
Job No.:

Location: MD 187 & Executive Boulevard
Date: 10/8/2011 Saturday
Recorder: AM
Interval (dd) : 15
(In Minutes)

County: Montgomery
Town: North Bethesda
Weather: Sunny

PEAK HOURS	AM PERIOD 6:00AM-12:00PM	Start	End	Volume	PM PERIOD 12:00PM-7:00PM	Start	End	Volume
		11:00	12:00	2331		12:45	13:45	0

Turning Movement Summary:

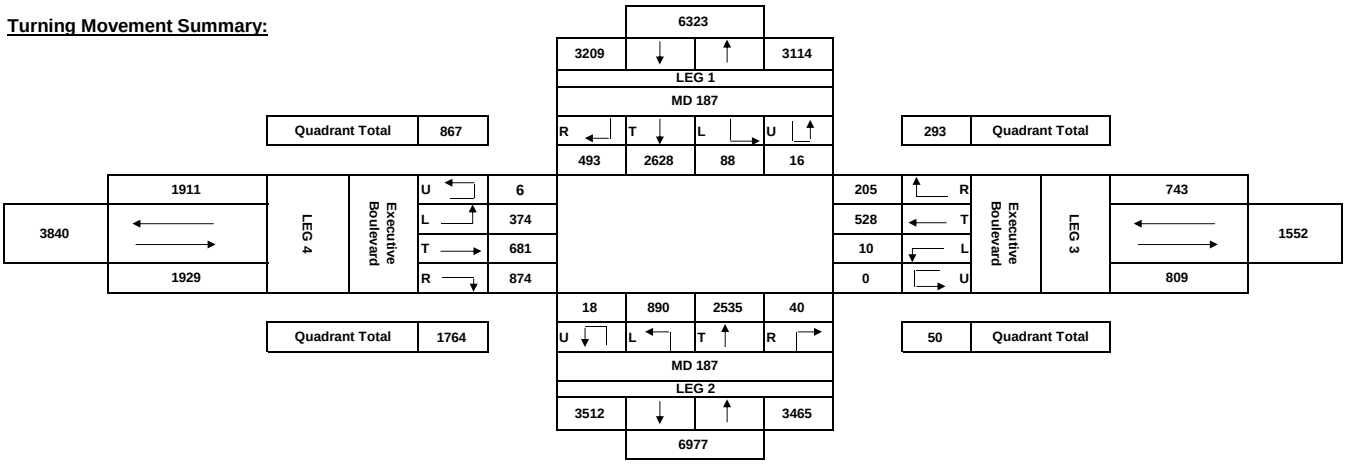

Comments:

AM Peak Hour :

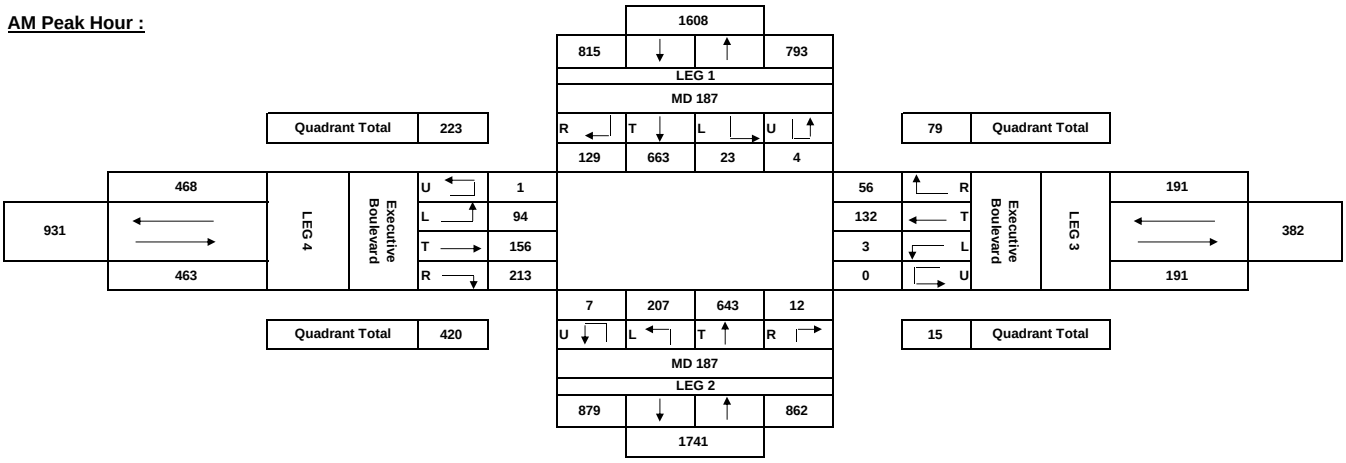

PM Peak Hour :

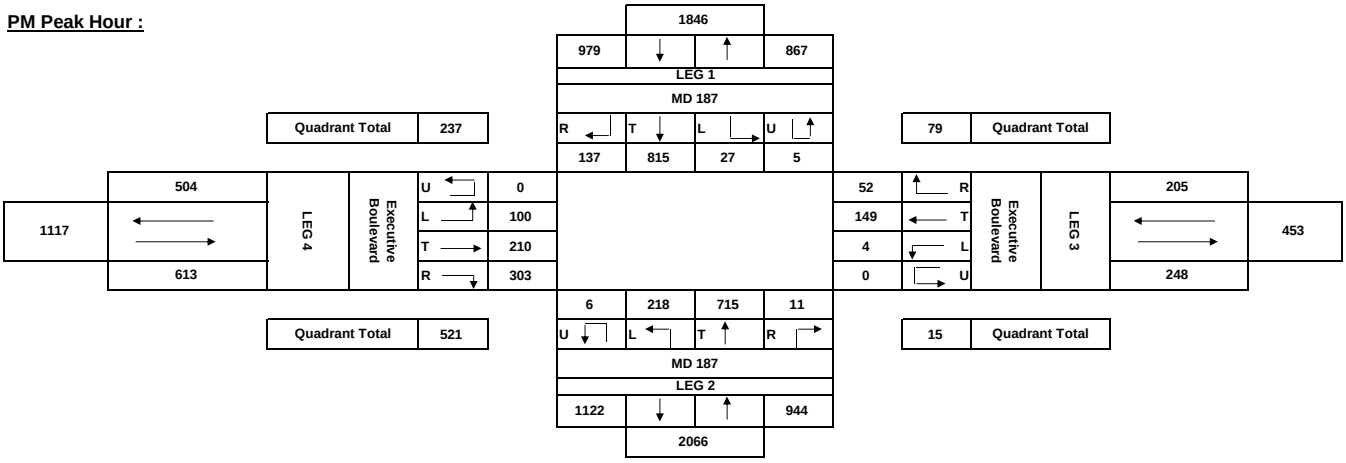

Maryland State Highway Administration
Highway Information Services Division
Turning Counts Study - Field Sheet

Request No.:
Job No.:

Location: MD 187 & Mid-Pike Plaza
Date: 10/8/2011 Saturday
Recorder: AM
Interval (dd) : 15
(In Minutes)

County: Montgomery
Town: North Bethesda
Weather: Sunny

PEAK HOURS	AM PERIOD 6:00AM-12:00PM	Start	End	Volume	PM PERIOD 12:00PM-7:00PM	Start	End	Volume
		11:00	12:00	1711		13:00	14:00	0

Street Name-->	Mid Pike Plaze West				Mid Pike Plaza West				Executive Boulevard				Executive Boulevard				GRAND
HOUR	From North				From South				From East				From West				
ENDING	L	T	R	TOT	L	T	R	TOT	L	T	R	TOT	L	T	R	TOT	TOTAL
00:15				0				0				0				0	0
00:30				0				0				0				0	0
00:45				0				0				0				0	0
01:00				0				0				0				0	0
01:15				0				0				0				0	0
01:30				0				0				0				0	0
01:45				0				0				0				0	0
02:00				0				0				0				0	0
02:15				0				0				0				0	0
02:30				0				0				0				0	0
02:45				0				0				0				0	0
03:00				0				0				0				0	0
03:15				0				0				0				0	0
03:30				0				0				0				0	0
03:45				0				0				0				0	0
04:00				0				0				0				0	0
04:15				0				0				0				0	0
04:30				0				0				0				0	0
04:45				0				0				0				0	0
05:00				0				0				0				0	0
05:15				0				0				0				0	0
05:30				0				0				0				0	0
05:45				0				0				0				0	0
06:00				0				0				0				0	0
06:15				0				0				0				0	0
06:30				0				0				0				0	0
06:45				0				0				0				0	0
07:00				0				0				0				0	0
07:15				0				0				0				0	0
07:30				0				0				0				0	0
07:45				0				0				0				0	0
08:00				0				0				0				0	0
08:15				0				0				0				0	0
08:30				0				0				0				0	0
08:45				0				0				0				0	0
09:00				0				0				0				0	0
09:15				0				0				0				0	0
09:30				0				0				0				0	0
09:45				0				0				0				0	0
10:00				0				0				0				0	0
10:15	9	0	12	21	0	0	1	1	0	141	10	151	32	159	0	191	364
10:30	7	0	23	30	2	1	0	3	0	147	11	158	36	135	1	172	363
10:45	25	0	25	50	1	2	1	4	2	147	13	162	52	170	1	223	439
11:00	20	0	35	55	0	0	1	1	2	120	9	131	41	164	4	209	396
11:15	**19**	**0**	**32**	**51**	**3**	**1**	**2**	**6**	**2**	**143**	**12**	**157**	**32**	**165**	**4**	**201**	**415**
11:30	**19**	**0**	**31**	**50**	**1**	**3**	**1**	**5**	**1**	**126**	**12**	**139**	**33**	**160**	**8**	**201**	**395**
11:45	**18**	**0**	**34**	**52**	**4**	**0**	**3**	**7**	**1**	**157**	**8**	**166**	**47**	**177**	**4**	**228**	**453**
12:00	**21**	**0**	**37**	**58**	**2**	**1**	**0**	**3**	**1**	**177**	**8**	**186**	**43**	**156**	**2**	**201**	**448**
12:15	15	0	41	56	1	0	3	4	0	172	13	185	41	176	0	217	462
12:30	24	1	29	54	1	2	1	4	1	139	12	152	28	167	2	197	407
12:45	18	0	36	54	2	0	0	2	3	170	7	180	45	195	4	244	480
13:00	24	0	44	68	1	0	0	1	0	157	13	170	39	166	4	209	448
13:15	**18**	**0**	**36**	**54**	**0**	**1**	**1**	**2**	**0**	**189**	**20**	**209**	**39**	**203**	**2**	**244**	**509**
13:30	**27**	**1**	**42**	**70**	**0**	**3**	**4**	**7**	**3**	**167**	**9**	**179**	**43**	**169**	**1**	**213**	**469**
13:45	**24**	**0**	**39**	**63**	**1**	**0**	**1**	**2**	**0**	**198**	**17**	**215**	**29**	**200**	**9**	**238**	**518**
14:00	**30**	**0**	**49**	**79**	**0**	**0**	**1**	**1**	**0**	**151**	**13**	**164**	**49**	**171**	**1**	**221**	**465**
14:15				0				0				0				0	0
14:30				0				0				0				0	0
14:45				0				0				0				0	0
15:00				0				0				0				0	0
15:15				0				0				0				0	0
15:30				0				0				0				0	0
15:45				0				0				0				0	0
16:00				0				0				0				0	0
16:15				0				0				0				0	0
16:30				0				0				0				0	0
16:45				0				0				0				0	0
17:00				0				0				0				0	0
17:15				0				0				0				0	0
17:30				0				0				0				0	0
17:45				0				0				0				0	0
18:00				0				0				0				0	0
18:15				0				0				0				0	0
18:30				0				0				0				0	0
18:45				0				0				0				0	0
19:00				0				0				0				0	0
19:15				0				0				0				0	0
19:30				0				0				0				0	0
19:45				0				0				0				0	0
20:00				0				0				0				0	0
20:15				0				0				0				0	0
20:30				0				0				0				0	0
20:45				0				0				0				0	0
21:00				0				0				0				0	0
TOTAL	**318**	**2**	**545**	**865**	**19**	**14**	**20**	**53**	**16**	**2501**	**187**	**2704**	**629**	**2733**	**47**	**3409**	**7031**
AM Peak Vol	77	0	134	211	10	5	6	21	5	603	40	648	155	658	18	831	1711
PM Peak Vol	99	1	166	266	1	4	7	12	3	705	59	767	160	743	13	916	1961

Maryland State Highway Administration
Highway Information Services Division
Turning Counts Study - Field Sheet

Request No.:
Job No.:

Location: MD 187 & Mid-Pike Plaza
Date: 10/8/2011 Saturday
Recorder: AM
Interval (dd) : 15
(In Minutes)

County: Montgomery
Town: North Bethesda
Weather: Sunny

PEAK HOURS	AM PERIOD 6:00AM-12:00PM	Start	End	Volume	PM PERIOD 12:00PM-7:00PM	Start	End	Volume
		11:00	12:00	1711		13:00	14:00	0

PEDESTRIAN SCHOOL CHILDREN & U-TURN BREAKDOWN

Hour	Mid Pike Plaze West			Mid Pike Plaza West			Executive Boulevard			Executive Boulevard		
Ending	S.C.	PED.	U.T.	S.C.	PED.	U.T.	S.C.	PED.	U.T.	S.C.	PED.	U.T.
00:15												
00:30												
00:45												
01:00												
01:15												
01:30												
01:45												
02:00												
02:15												
02:30												
02:45												
03:00												
03:15												
03:30												
03:45												
04:00												
04:15												
04:30												
04:45												
05:00												
05:15												
05:30												
05:45												
06:00												
06:15												
06:30												
06:45												
07:00												
07:15												
07:30												
07:45												
08:00												
08:15												
08:30												
08:45												
09:00												
09:15												
09:30												
09:45												
10:00												
10:15									0			1
10:30									0			0
10:45									1			1
11:00									1			3
11:15									2			1
11:30									1			2
11:45									2			1
12:00									3			0
12:15									0			2
12:30									2			2
12:45									1			2
13:00									0			1
13:15									0			0
13:30									0			3
13:45									1			1
14:00									0			2
14:15									1			0
14:30												
14:45												
15:00												
15:15												
15:30												
15:45												
16:00												
16:15												
16:30												
16:45												
17:00												
17:15												
17:30												
17:45												
18:00												
18:15												
18:30												
18:45												
19:00												
19:15												
19:30												
19:45												
20:00												
20:15												
20:30												
20:45												
21:00												
TOTAL	**0**	**0**	**0**	**0**	**0**	**0**	**0**	**0**	**15**	**0**	**0**	**22**
AM Peak Vol	0	0	0	0	0	0	0	0	8	0	0	4
PM Peak Vol	0	0	0	0	0	0	0	0	1	0	0	6

Maryland State Highway Administration
Highway Information Services Division
Turning Counts Study - Field Sheet

Request No.:
Job No.:

Location: MD 187 & Mid-Pike Plaza
Date: 10/8/2011 Saturday
Recorder: AM
Interval (dd) : 15
(In Minutes)

County: Montgomery
Town: North Bethesda
Weather: Sunny

PEAK HOURS	AM PERIOD 6:00AM-12:00PM	Start	End	Volume	PM PERIOD 12:00PM-7:00PM	Start	End	Volume
		11:00	12:00	1711		13:00	14:00	0

Turning Movement Summary:

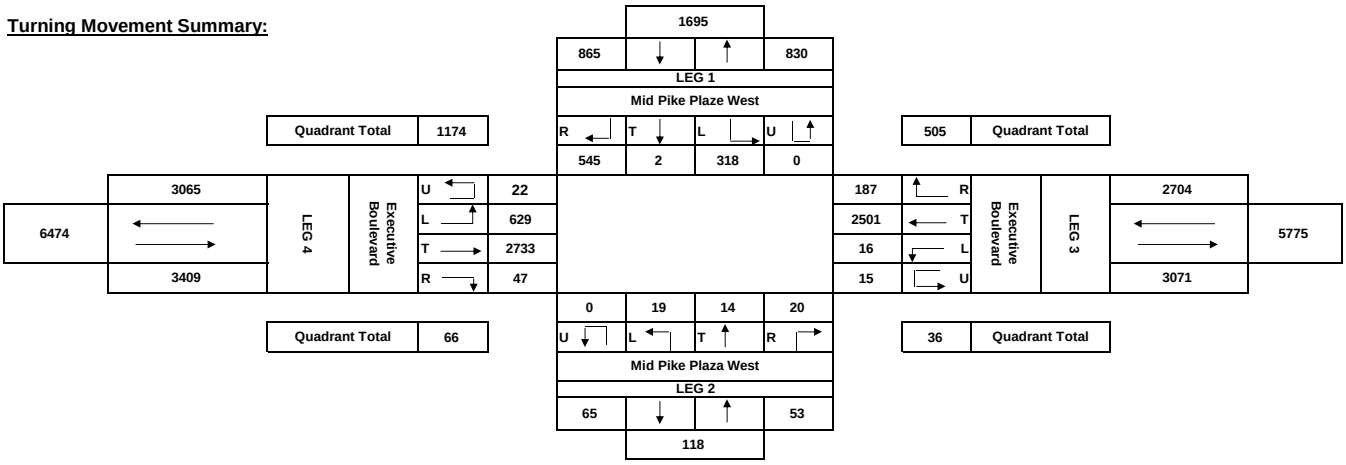

Comments:

AM Peak Hour :

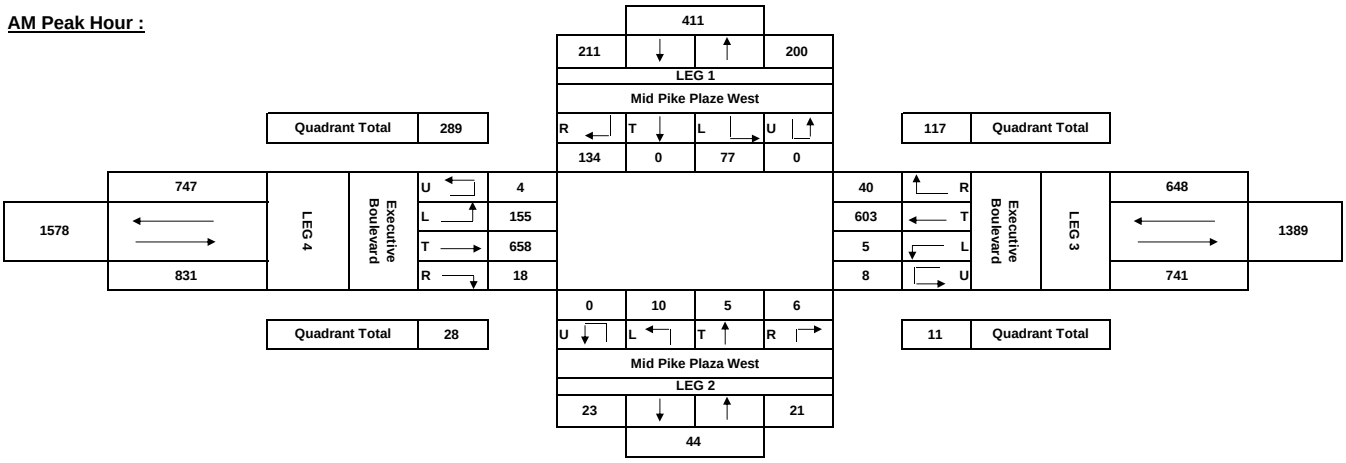

PM Peak Hour :

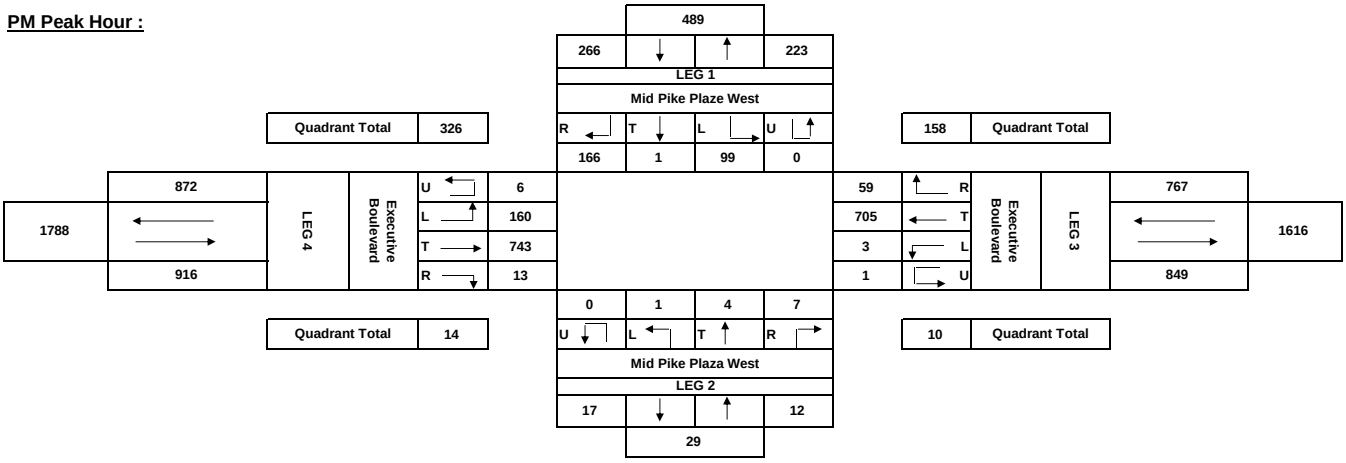

Maryland State Highway Administration
Highway Information Services Division
Turning Counts Study - Field Sheet

Request No.:
Job No.:

Location: MD 187 and Nebel Street
Date: 10/15/2011 Saturday
Recorder: AM
Interval (dd) : 15
(In Minutes)

County: Montgomery
Town: North Bethesda
Weather: Sunny

PEAK HOURS	AM PERIOD 6:00AM-12:00PM	Start	End	Volume	PM PERIOD 12:00PM-7:00PM	Start	End	Volume
		11:00	12:00	865		12:00	13:00	0

Street Name-->	Nebel				Nebel				MD 187				MD 187				
HOUR	From North				From South				From East				From West				GRAND
ENDING	L	T	R	TOT	L	T	R	TOT	L	T	R	TOT	L	T	R	TOT	TOTAL
00:15				0				0				0				0	0
00:30				0				0				0				0	0
00:45				0				0				0				0	0
01:00				0				0				0				0	0
01:15				0				0				0				0	0
01:30				0				0				0				0	0
01:45				0				0				0				0	0
02:00				0				0				0				0	0
02:15				0				0				0				0	0
02:30				0				0				0				0	0
02:45				0				0				0				0	0
03:00				0				0				0				0	0
03:15				0				0				0				0	0
03:30				0				0				0				0	0
03:45				0				0				0				0	0
04:00				0				0				0				0	0
04:15				0				0				0				0	0
04:30				0				0				0				0	0
04:45				0				0				0				0	0
05:00				0				0				0				0	0
05:15				0				0				0				0	0
05:30				0				0				0				0	0
05:45				0				0				0				0	0
06:00				0				0				0				0	0
06:15				0				0				0				0	0
06:30				0				0				0				0	0
06:45				0				0				0				0	0
07:00				0				0				0				0	0
07:15				0				0				0				0	0
07:30				0				0				0				0	0
07:45				0				0				0				0	0
08:00				0				0				0				0	0
08:15				0				0				0				0	0
08:30				0				0				0				0	0
08:45				0				0				0				0	0
09:00				0				0				0				0	0
09:15				0				0				0				0	0
09:30				0				0				0				0	0
09:45				0				0				0				0	0
10:00				0				0				0				0	0
10:15	0	46	39	85	20	31	0	51	0	0	0	0	34	0	12	46	182
10:30	0	37	29	66	17	30	0	47	0	0	0	0	25	0	9	34	147
10:45	0	50	43	93	13	38	0	51	0	0	0	0	33	0	13	46	190
11:00	0	54	35	89	15	41	0	56	0	0	0	0	42	0	10	52	197
11:15	**0**	**48**	**35**	**83**	**16**	**61**	**0**	**77**	**0**	**0**	**0**	**0**	**38**	**0**	**14**	**52**	**212**
11:30	**0**	**50**	**60**	**110**	**13**	**52**	**0**	**65**	**0**	**0**	**0**	**0**	**33**	**0**	**15**	**48**	**223**
11:45	**0**	**48**	**40**	**88**	**12**	**62**	**0**	**74**	**0**	**0**	**0**	**0**	**34**	**0**	**15**	**49**	**211**
12:00	**0**	**49**	**41**	**90**	**21**	**44**	**0**	**65**	**0**	**0**	**0**	**0**	**46**	**0**	**18**	**64**	**219**
12:15	**0**	**66**	**43**	**109**	**23**	**65**	**0**	**88**	**0**	**0**	**0**	**0**	**41**	**0**	**27**	**68**	**265**
12:30	**0**	**54**	**43**	**97**	**22**	**58**	**0**	**80**	**0**	**0**	**0**	**0**	**28**	**0**	**15**	**43**	**220**
12:45	**0**	**70**	**44**	**114**	**27**	**50**	**0**	**77**	**0**	**0**	**0**	**0**	**41**	**0**	**11**	**52**	**243**
13:00	**0**	**58**	**38**	**96**	**16**	**57**	**0**	**73**	**0**	**0**	**0**	**0**	**36**	**0**	**21**	**57**	**226**
13:15	0	63	42	105	21	48	0	69	0	0	0	0	46	0	23	69	243
13:30	0	48	37	85	21	56	0	77	0	0	0	0	37	0	13	50	212
13:45	0	44	38	82	16	52	0	68	0	0	0	0	44	0	21	65	215
14:00	0	62	59	121	15	54	0	69	0	0	0	0	26	0	11	37	227
14:15				0				0				0				0	0
14:30				0				0				0				0	0
14:45				0				0				0				0	0
15:00				0				0				0				0	0
15:15				0				0				0				0	0
15:30				0				0				0				0	0
15:45				0				0				0				0	0
16:00				0				0				0				0	0
16:15				0				0				0				0	0
16:30				0				0				0				0	0
16:45				0				0				0				0	0
17:00				0				0				0				0	0
17:15				0				0				0				0	0
17:30				0				0				0				0	0
17:45				0				0				0				0	0
18:00				0				0				0				0	0
18:15				0				0				0				0	0
18:30				0				0				0				0	0
18:45				0				0				0				0	0
19:00				0				0				0				0	0
19:15				0				0				0				0	0
19:30				0				0				0				0	0
19:45				0				0				0				0	0
20:00				0				0				0				0	0
20:15				0				0				0				0	0
20:30				0				0				0				0	0
20:45				0				0				0				0	0
21:00				0				0				0				0	0
TOTAL	**0**	**847**	**666**	**1513**	**288**	**799**	**0**	**1087**	**0**	**0**	**0**	**0**	**584**	**0**	**248**	**832**	**3432**
AM Peak Vol	0	195	176	371	62	219	0	281	0	0	0	0	151	0	62	213	865
PM Peak Vol	0	248	168	416	88	230	0	318	0	0	0	0	146	0	74	220	954

Maryland State Highway Administration
Highway Information Services Division
Turning Counts Study - Field Sheet

Request No.:
Job No.:

Location: MD 187 and Nebel Street
Date: 10/15/2011 Saturday
Recorder: AM
Interval (dd) : 15
(In Minutes)

County: Montgomery
Town: North Bethesda
Weather: Sunny

PEAK HOURS	AM PERIOD 6:00AM-12:00PM	Start	End	Volume	PM PERIOD 12:00PM-7:00PM	Start	End	Volume
		11:00	12:00	865		12:00	13:00	0

PEDESTRIAN SCHOOL CHILDREN & U-TURN BREAKDOWN

Hour	Nebel			Nebel			MD 187			MD 187		
Ending	S.C.	PED.	U.T.	S.C.	PED.	U.T.	S.C.	PED.	U.T.	S.C.	PED.	U.T.
00:15												
00:30												
00:45												
01:00												
01:15												
01:30												
01:45												
02:00												
02:15												
02:30												
02:45												
03:00												
03:15												
03:30												
03:45												
04:00												
04:15												
04:30												
04:45												
05:00												
05:15												
05:30												
05:45												
06:00												
06:15												
06:30												
06:45												
07:00												
07:15												
07:30												
07:45												
08:00												
08:15												
08:30												
08:45												
09:00												
09:15												
09:30												
09:45												
10:00												
10:15												3
10:30												1
10:45												4
11:00												5
11:15												5
11:30												0
11:45												2
12:00												3
12:15												6
12:30												6
12:45												5
13:00												3
13:15												4
13:30												5
13:45												2
14:00												5
14:15												
14:30												
14:45												
15:00												
15:15												
15:30												
15:45												
16:00												
16:15												
16:30												
16:45												
17:00												
17:15												
17:30												
17:45												
18:00												
18:15												
18:30												
18:45												
19:00												
19:15												
19:30												
19:45												
20:00												
20:15												
20:30												
20:45												
21:00												
TOTAL	**0**	**0**	**0**	**0**	**0**	**0**	**0**	**0**	**0**	**0**	**0**	**59**
AM Peak Vol	0	0	0	0	0	0	0	0	0	0	0	10
PM Peak Vol	0	0	0	0	0	0	0	0	0	0	0	20

Maryland State Highway Administration
Highway Information Services Division
Turning Counts Study - Field Sheet

Request No.:
Job No.:

Location: MD 187 and Nebel Street
Date: 10/15/2011 Saturday
Recorder: AM
Interval (dd) : 15
(In Minutes)

County: Montgomery
Town: North Bethesda
Weather: Sunny

PEAK HOURS	AM PERIOD 6:00AM-12:00PM	Start	End	Volume	PM PERIOD 12:00PM-7:00PM	Start	End	Volume
		11:00	12:00	865		12:00	13:00	0

Turning Movement Summary:

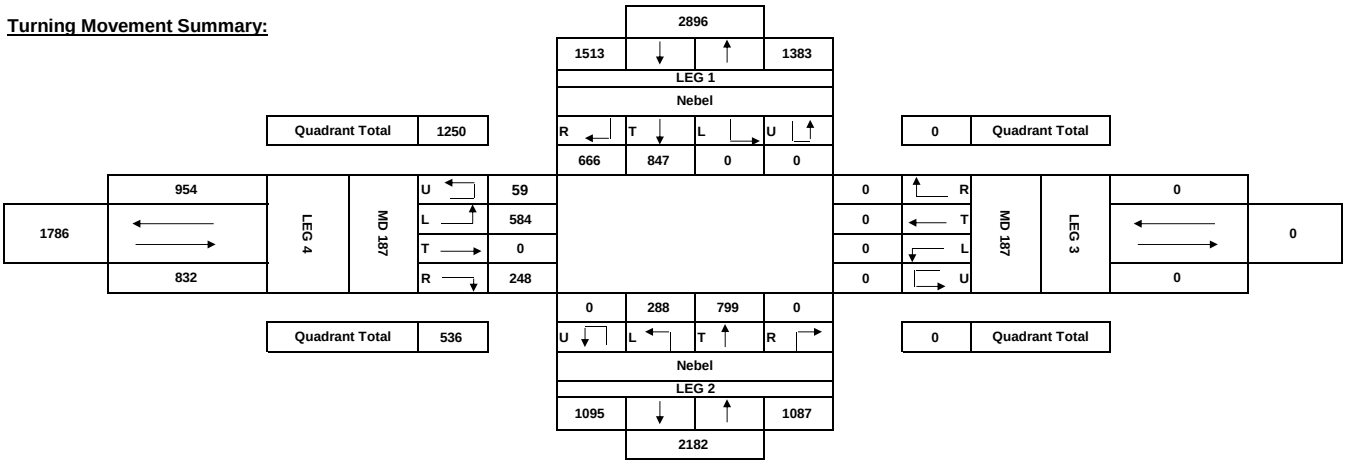

Comments:

AM Peak Hour :

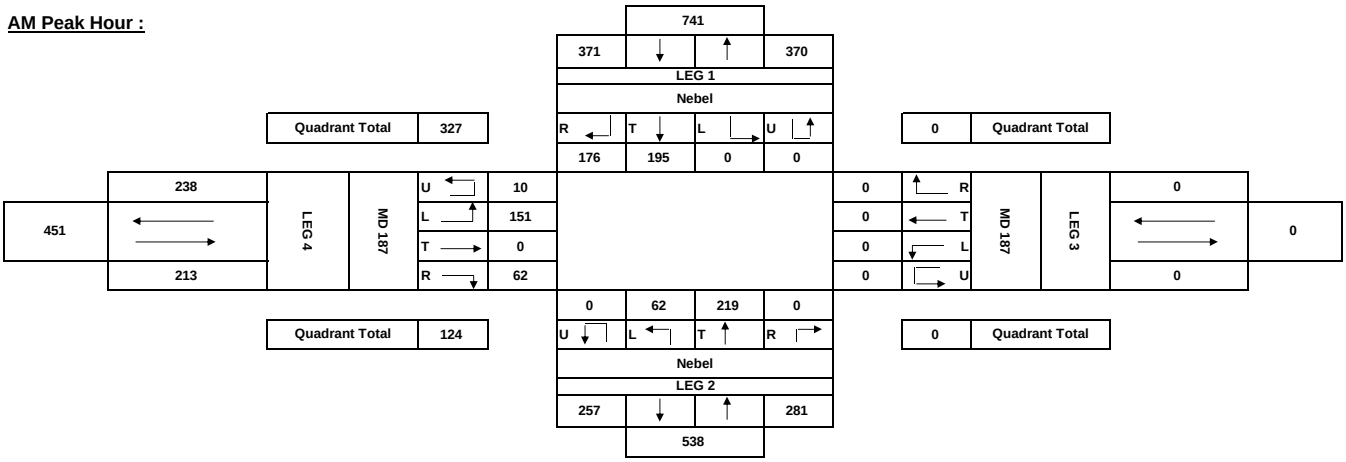

PM Peak Hour :

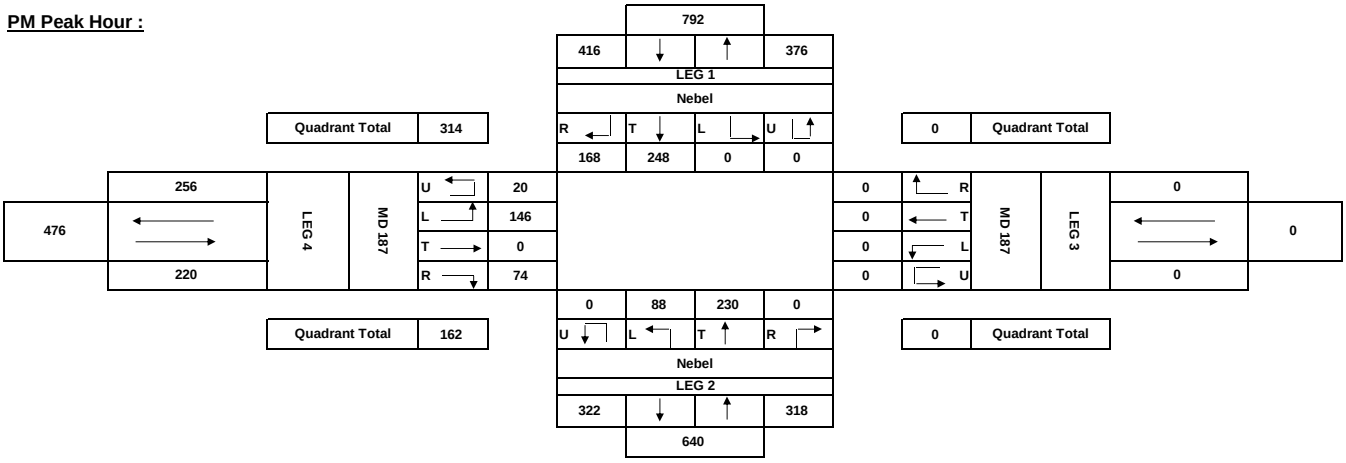

Maryland State Highway Administration
Highway Information Services Division
Turning Counts Study - Field Sheet

Request No.:
Job No.:

Location: MD 355 @ Pooks Hill Road
Date: 11/19/2011 Saturday
Recorder: AM
Interval (dd) : 15
(In Minutes)

County: Montgomery
Town: North Bethesda
Weather: Sunny

PEAK HOURS	AM PERIOD 6:00AM-12:00PM	Start	End	Volume	PM PERIOD 12:00PM-7:00PM	Start	End	Volume
		11:00	12:00	3756		13:00	14:00	0

Street Name-->	I-270				I-270				MD 187				MD 187				
HOUR	From North				From South				From East				From West				GRAND
ENDING	L	T	R	TOT	L	T	R	TOT	L	T	R	TOT	L	T	R	TOT	TOTAL
00:15				0				0				0				0	0
00:30				0				0				0				0	0
00:45				0				0				0				0	0
01:00				0				0				0				0	0
01:15				0				0				0				0	0
01:30				0				0				0				0	0
01:45				0				0				0				0	0
02:00				0				0				0				0	0
02:15				0				0				0				0	0
02:30				0				0				0				0	0
02:45				0				0				0				0	0
03:00				0				0				0				0	0
03:15				0				0				0				0	0
03:30				0				0				0				0	0
03:45				0				0				0				0	0
04:00				0				0				0				0	0
04:15				0				0				0				0	0
04:30				0				0				0				0	0
04:45				0				0				0				0	0
05:00				0				0				0				0	0
05:15				0				0				0				0	0
05:30				0				0				0				0	0
05:45				0				0				0				0	0
06:00				0				0				0				0	0
06:15				0				0				0				0	0
06:30				0				0				0				0	0
06:45				0				0				0				0	0
07:00				0				0				0				0	0
07:15				0				0				0				0	0
07:30				0				0				0				0	0
07:45				0				0				0				0	0
08:00				0				0				0				0	0
08:15				0				0				0				0	0
08:30				0				0				0				0	0
08:45				0				0				0				0	0
09:00				0				0				0				0	0
09:15				0				0				0				0	0
09:30				0				0				0				0	0
09:45				0				0				0				0	0
10:00				0				0				0				0	0
10:15	0	348	27	375	23	322	4	349	0	0	0	0	52	0	10	62	786
10:30	0	446	31	477	3	363	0	366	0	0	0	0	46	0	11	57	900
10:45	0	369	71	440	9	358	0	367	0	0	0	0	51	0	20	71	878
11:00	0	398	42	440	6	377	0	383	0	0	0	0	67	0	10	77	900
11:15	**0**	**336**	**40**	**376**	**10**	**368**	**0**	**378**	**0**	**0**	**0**	**0**	**83**	**0**	**19**	**102**	**856**
11:30	**0**	**380**	**52**	**432**	**10**	**421**	**0**	**431**	**0**	**0**	**0**	**0**	**89**	**0**	**12**	**101**	**964**
11:45	**0**	**404**	**44**	**448**	**8**	**455**	**0**	**463**	**0**	**0**	**0**	**0**	**50**	**0**	**16**	**66**	**977**
12:00	**0**	**448**	**58**	**506**	**11**	**365**	**0**	**376**	**0**	**0**	**0**	**0**	**59**	**0**	**18**	**77**	**959**
12:15	0	412	47	459	8	426	0	434	0	0	0	0	65	0	13	78	971
12:30	0	390	63	453	16	445	0	461	0	0	0	0	56	0	18	74	988
12:45	0	397	46	443	9	457	0	466	0	0	0	0	76	0	17	93	1002
13:00	0	375	60	435	12	382	0	394	0	0	0	0	79	1	10	90	919
13:15	**0**	**445**	**48**	**493**	**12**	**486**	**0**	**498**	**0**	**0**	**0**	**0**	**62**	**0**	**16**	**78**	**1069**
13:30	**0**	**426**	**44**	**470**	**17**	**453**	**0**	**470**	**0**	**0**	**0**	**0**	**46**	**0**	**14**	**60**	**1000**
13:45	**0**	**353**	**49**	**402**	**13**	**463**	**0**	**476**	**0**	**0**	**0**	**0**	**47**	**0**	**23**	**70**	**948**
14:00	**0**	**403**	**44**	**447**	**12**	**491**	**0**	**503**	**0**	**0**	**0**	**0**	**55**	**0**	**12**	**67**	**1017**
14:15				0				0				0				0	0
14:30				0				0				0				0	0
14:45				0				0				0				0	0
15:00				0				0				0				0	0
15:15				0				0				0				0	0
15:30				0				0				0				0	0
15:45				0				0				0				0	0
16:00				0				0				0				0	0
16:15				0				0				0				0	0
16:30				0				0				0				0	0
16:45				0				0				0				0	0
17:00				0				0				0				0	0
17:15				0				0				0				0	0
17:30				0				0				0				0	0
17:45				0				0				0				0	0
18:00				0				0				0				0	0
18:15				0				0				0				0	0
18:30				0				0				0				0	0
18:45				0				0				0				0	0
19:00				0				0				0				0	0
19:15				0				0				0				0	0
19:30				0				0				0				0	0
19:45				0				0				0				0	0
20:00				0				0				0				0	0
20:15				0				0				0				0	0
20:30				0				0				0				0	0
20:45				0				0				0				0	0
21:00				0				0				0				0	0
TOTAL	**0**	**6330**	**766**	**7096**	**179**	**6632**	**4**	**6815**	**0**	**0**	**0**	**0**	**983**	**1**	**239**	**1223**	**15134**
AM Peak Vol	0	1568	194	1762	39	1609	0	1648	0	0	0	0	281	0	65	346	3756
PM Peak Vol	0	1627	185	1812	54	1893	0	1947	0	0	0	0	210	0	65	275	4034

Maryland State Highway Administration
Highway Information Services Division
Turning Counts Study - Field Sheet

Request No.:
Job No.:

Location: MD 355 @ Pooks Hill Road
Date: 11/19/2011 Saturday
Recorder: AM
Interval (dd) : 15
(In Minutes)

County: Montgomery
Town: North Bethesda
Weather: Sunny

PEAK HOURS	AM PERIOD 6:00AM-12:00PM	Start	End	Volume	PM PERIOD 12:00PM-7:00PM	Start	End	Volume
		11:00	12:00	3756		13:00	14:00	0

PEDESTRIAN SCHOOL CHILDREN & U-TURN BREAKDOWN

Hour Ending	I-270 S.C.	I-270 PED.	I-270 U.T.	I-270 S.C.	I-270 PED.	I-270 U.T.	MD 187 S.C.	MD 187 PED.	MD 187 U.T.	MD 187 S.C.	MD 187 PED.	MD 187 U.T.
00:15												
00:30												
00:45												
01:00												
01:15												
01:30												
01:45												
02:00												
02:15												
02:30												
02:45												
03:00												
03:15												
03:30												
03:45												
04:00												
04:15												
04:30												
04:45												
05:00												
05:15												
05:30												
05:45												
06:00												
06:15												
06:30												
06:45												
07:00												
07:15												
07:30												
07:45												
08:00												
08:15												
08:30												
08:45												
09:00												
09:15												
09:30												
09:45												
10:00												
10:15			0			0						0
10:30			0			0						0
10:45			1			0						0
11:00			0			0						0
11:15			0			1						0
11:30			0			0						1
11:45			0			0						1
12:00			0			0						0
12:15			0			0						0
12:30			0			1						0
12:45			0			0						0
13:00			0			0						0
13:15			0			0						0
13:30			1			0						0
13:45			0			0						0
14:00			0			1						1
14:15												
14:30												
14:45												
15:00												
15:15												
15:30												
15:45												
16:00												
16:15												
16:30												
16:45												
17:00												
17:15												
17:30												
17:45												
18:00												
18:15												
18:30												
18:45												
19:00												
19:15												
19:30												
19:45												
20:00												
20:15												
20:30												
20:45												
21:00												
TOTAL	**0**	**0**	**2**	**0**	**0**	**3**	**0**	**0**	**0**	**0**	**0**	**3**
AM Peak Vol	0	0	0	0	0	1	0	0	0	0	0	2
PM Peak Vol	0	0	1	0	0	1	0	0	0	0	0	1

Maryland State Highway Administration
Highway Information Services Division
Turning Counts Study - Field Sheet

Request No.:
Job No.:

Location: MD 355 @ Pooks Hill Road
Date: 11/19/2011 Saturday
Recorder: AM
Interval (dd) : 15
(In Minutes)

County: Montgomery
Town: North Bethesda
Weather: Sunny

PEAK HOURS	AM PERIOD 6:00AM-12:00PM	Start	End	Volume	PM PERIOD 12:00PM-7:00PM	Start	End	Volume
		11:00	12:00	3756		13:00	14:00	0

Turning Movement Summary:

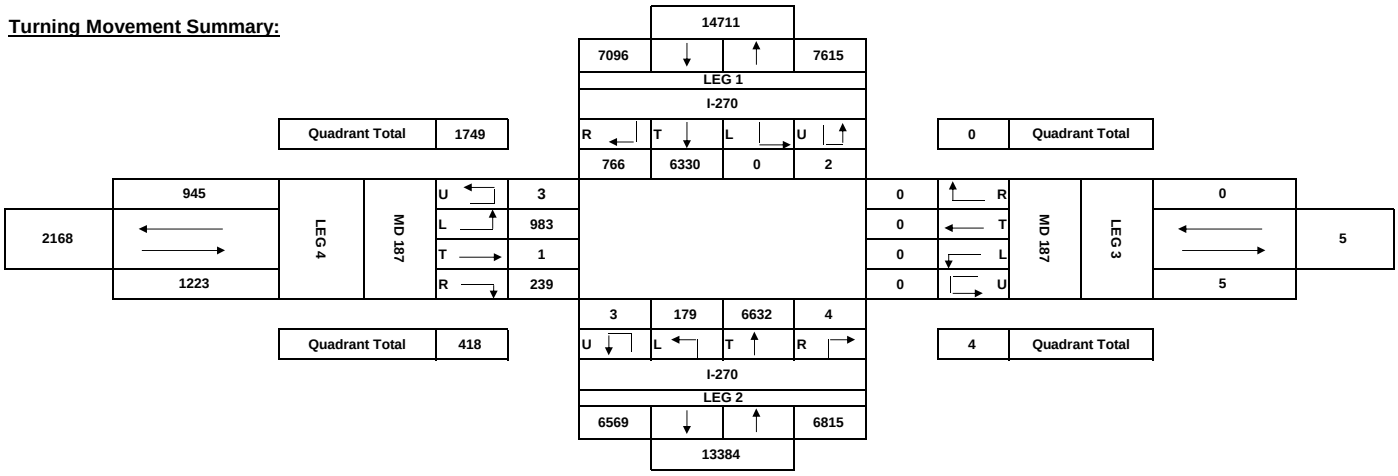

Comments:

AM Peak Hour :

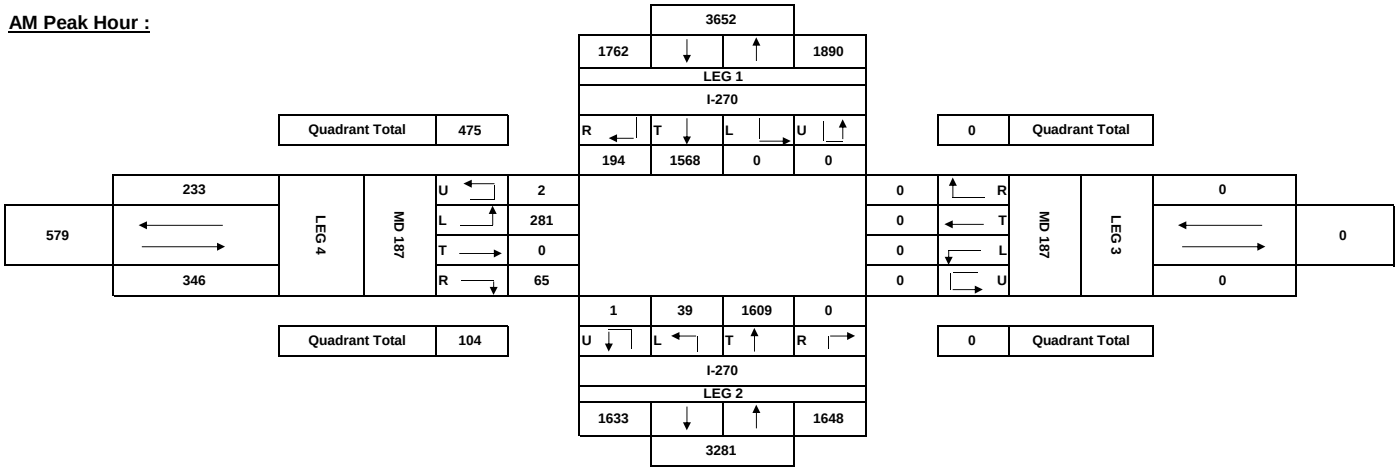

PM Peak Hour :

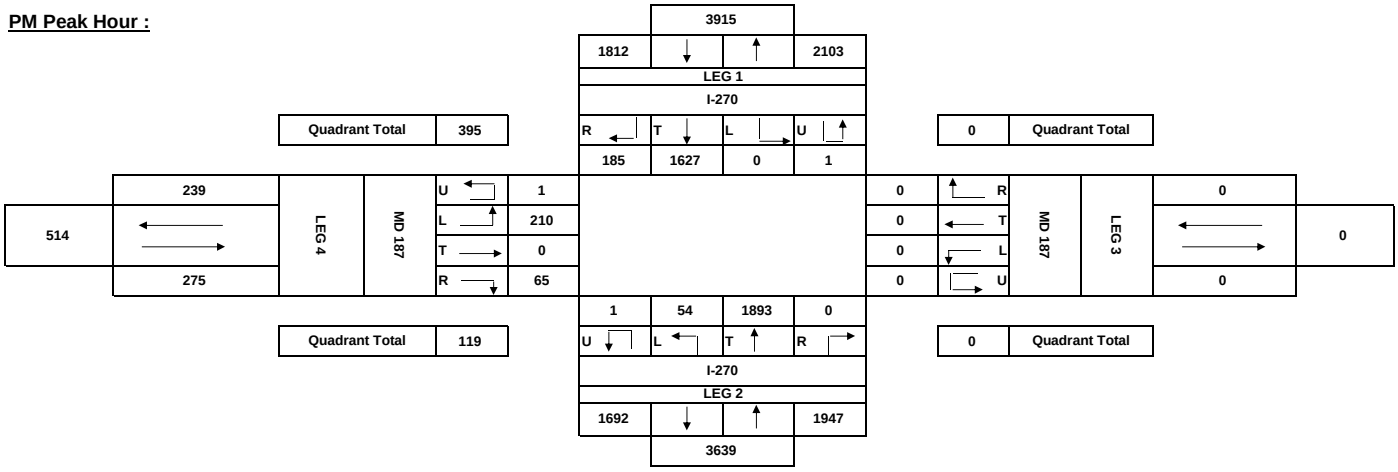

Maryland State Highway Administration
Highway Information Services Division
Turning Counts Study - Field Sheet

Request No.:
Job No.:

Location: MD 355 @ Strathmore Avenue
Date: 11/5/2011 Saturday
Recorder: AM
Interval (dd) : 15
(In Minutes)

County: Montgomery
Town: North Bethesda
Weather: Sunny

PEAK HOURS	AM PERIOD 6:00AM-12:00PM	Start	End	Volume	PM PERIOD 12:00PM-7:00PM	Start	End	Volume
		11:00	12:00	4404		12:15	13:15	0

Street Name-->	MD 355				MD 355				Strathmore Avenue				Strathmore Avenue				
HOUR	From North				From South				From East				From West				GRAND
ENDING	L	T	R	TOT	L	T	R	TOT	L	T	R	TOT	L	T	R	TOT	TOTAL
00:15				0				0				0				0	0
00:30				0				0				0				0	0
00:45				0				0				0				0	0
01:00				0				0				0				0	0
01:15				0				0				0				0	0
01:30				0				0				0				0	0
01:45				0				0				0				0	0
02:00				0				0				0				0	0
02:15				0				0				0				0	0
02:30				0				0				0				0	0
02:45				0				0				0				0	0
03:00				0				0				0				0	0
03:15				0				0				0				0	0
03:30				0				0				0				0	0
03:45				0				0				0				0	0
04:00				0				0				0				0	0
04:15				0				0				0				0	0
04:30				0				0				0				0	0
04:45				0				0				0				0	0
05:00				0				0				0				0	0
05:15				0				0				0				0	0
05:30				0				0				0				0	0
05:45				0				0				0				0	0
06:00				0				0				0				0	0
06:15				0				0				0				0	0
06:30				0				0				0				0	0
06:45				0				0				0				0	0
07:00				0				0				0				0	0
07:15				0				0				0				0	0
07:30				0				0				0				0	0
07:45				0				0				0				0	0
08:00				0				0				0				0	0
08:15				0				0				0				0	0
08:30				0				0				0				0	0
08:45				0				0				0				0	0
09:00				0				0				0				0	0
09:15				0				0				0				0	0
09:30				0				0				0				0	0
09:45				0				0				0				0	0
10:00				0				0				0				0	0
10:15	50	285	2	337	20	324	63	407	91	2	80	173	5	6	25	36	953
10:30	62	314	4	380	23	343	64	430	74	1	87	162	13	20	31	64	1036
10:45	58	290	7	355	20	299	81	400	54	2	73	129	19	10	26	55	939
11:00	61	332	2	395	30	356	73	459	46	5	78	129	11	3	29	43	1026
11:15	**58**	**380**	**3**	**441**	**11**	**377**	**59**	**447**	**47**	**4**	**84**	**135**	**3**	**2**	**6**	**11**	**1034**
11:30	**68**	**363**	**2**	**433**	**18**	**418**	**50**	**486**	**73**	**4**	**75**	**152**	**7**	**0**	**9**	**16**	**1087**
11:45	**87**	**404**	**3**	**494**	**15**	**408**	**61**	**484**	**48**	**4**	**61**	**113**	**4**	**0**	**12**	**16**	**1107**
12:00	**69**	**443**	**4**	**516**	**17**	**423**	**66**	**506**	**68**	**1**	**66**	**135**	**6**	**2**	**11**	**19**	**1176**
12:15	72	425	2	499	21	499	62	582	62	1	71	134	8	1	4	13	1228
12:30	**85**	**429**	**1**	**515**	**17**	**443**	**56**	**516**	**50**	**4**	**76**	**130**	**18**	**13**	**49**	**80**	**1241**
12:45	**69**	**472**	**2**	**543**	**13**	**482**	**59**	**554**	**64**	**1**	**75**	**140**	**4**	**3**	**8**	**15**	**1252**
13:00	**64**	**456**	**5**	**525**	**17**	**488**	**58**	**563**	**88**	**1**	**64**	**153**	**6**	**1**	**15**	**22**	**1263**
13:15	**57**	**463**	**2**	**522**	**13**	**477**	**63**	**553**	**85**	**3**	**71**	**159**	**6**	**0**	**11**	**17**	**1251**
13:30	60	436	2	498	11	502	60	573	71	1	81	153	4	0	7	11	1235
13:45	71	399	3	473	14	499	59	572	73	1	77	151	7	1	9	17	1213
14:00	64	417	1	482	10	468	56	534	65	2	79	146	5	3	5	13	1175
14:15				0				0				0				0	0
14:30				0				0				0				0	0
14:45				0				0				0				0	0
15:00				0				0				0				0	0
15:15				0				0				0				0	0
15:30				0				0				0				0	0
15:45				0				0				0				0	0
16:00				0				0				0				0	0
16:15				0				0				0				0	0
16:30				0				0				0				0	0
16:45				0				0				0				0	0
17:00				0				0				0				0	0
17:15				0				0				0				0	0
17:30				0				0				0				0	0
17:45				0				0				0				0	0
18:00				0				0				0				0	0
18:15				0				0				0				0	0
18:30				0				0				0				0	0
18:45				0				0				0				0	0
19:00				0				0				0				0	0
19:15				0				0				0				0	0
19:30				0				0				0				0	0
19:45				0				0				0				0	0
20:00				0				0				0				0	0
20:15				0				0				0				0	0
20:30				0				0				0				0	0
20:45				0				0				0				0	0
21:00				0				0				0				0	0
TOTAL	**1055**	**6308**	**45**	**7408**	**270**	**6806**	**990**	**8066**	**1059**	**37**	**1198**	**2294**	**126**	**65**	**257**	**448**	**18216**
AM Peak Vol	282	1590	12	1884	61	1626	236	1923	236	13	286	535	20	4	38	62	4404
PM Peak Vol	275	1820	10	2105	60	1890	236	2186	287	9	286	582	34	17	83	134	5007

Maryland State Highway Administration
Highway Information Services Division
Turning Counts Study - Field Sheet

Request No.:
Job No.:

Location: MD 355 @ Strathmore Avenue
Date: 11/5/2011 Saturday
Recorder: AM
Interval (dd) : 15
(In Minutes)

County: Montgomery
Town: North Bethesda
Weather: Sunny

PEAK HOURS	AM PERIOD 6:00AM-12:00PM	Start	End	Volume	PM PERIOD 12:00PM-7:00PM	Start	End	Volume
		11:00	12:00	4404		12:15	13:15	0

PEDESTRIAN SCHOOL CHILDREN & U-TURN BREAKDOWN

Hour Ending	MD 355			MD 355			Strathmore Avenue			Strathmore Avenue		
	S.C.	PED.	U.T.	S.C.	PED.	U.T.	S.C.	PED.	U.T.	S.C.	PED.	U.T.
00:15												
00:30												
00:45												
01:00												
01:15												
01:30												
01:45												
02:00												
02:15												
02:30												
02:45												
03:00												
03:15												
03:30												
03:45												
04:00												
04:15												
04:30												
04:45												
05:00												
05:15												
05:30												
05:45												
06:00												
06:15												
06:30												
06:45												
07:00												
07:15												
07:30												
07:45												
08:00												
08:15												
08:30												
08:45												
09:00												
09:15												
09:30												
09:45												
10:00									0			
10:15									0			
10:30									0			
10:45									0			
11:00									2			
11:15									0			
11:30									0			
11:45									0			
12:00									0			
12:15									1			
12:30									0			
12:45									0			
13:00									0			
13:15									0			
13:30									0			
13:45									0			
14:00												
14:15												
14:30												
14:45												
15:00												
15:15												
15:30												
15:45												
16:00												
16:15												
16:30												
16:45												
17:00												
17:15												
17:30												
17:45												
18:00												
18:15												
18:30												
18:45												
19:00												
19:15												
19:30												
19:45												
20:00												
20:15												
20:30												
20:45												
21:00												
TOTAL	**0**	**0**	**0**	**0**	**0**	**0**	**0**	**0**	**3**	**0**	**0**	**0**
AM Peak Vol	0	0	0	0	0	0	0	0	0	0	0	0
PM Peak Vol	0	0	0	0	0	0	0	0	0	0	0	0

Maryland State Highway Administration
Highway Information Services Division
Turning Counts Study - Field Sheet

Request No.:
Job No.:

Location: MD 355 @ Strathmore Avenue
Date: 11/5/2011 Saturday
Recorder: AM
Interval (dd) : 15
(In Minutes)

County: Montgomery
Town: North Bethesda
Weather: Sunny

PEAK HOURS	AM PERIOD 6:00AM-12:00PM	Start	End	Volume	PM PERIOD 12:00PM-7:00PM	Start	End	Volume
		11:00	12:00	4404		12:15	13:15	0

Turning Movement Summary:

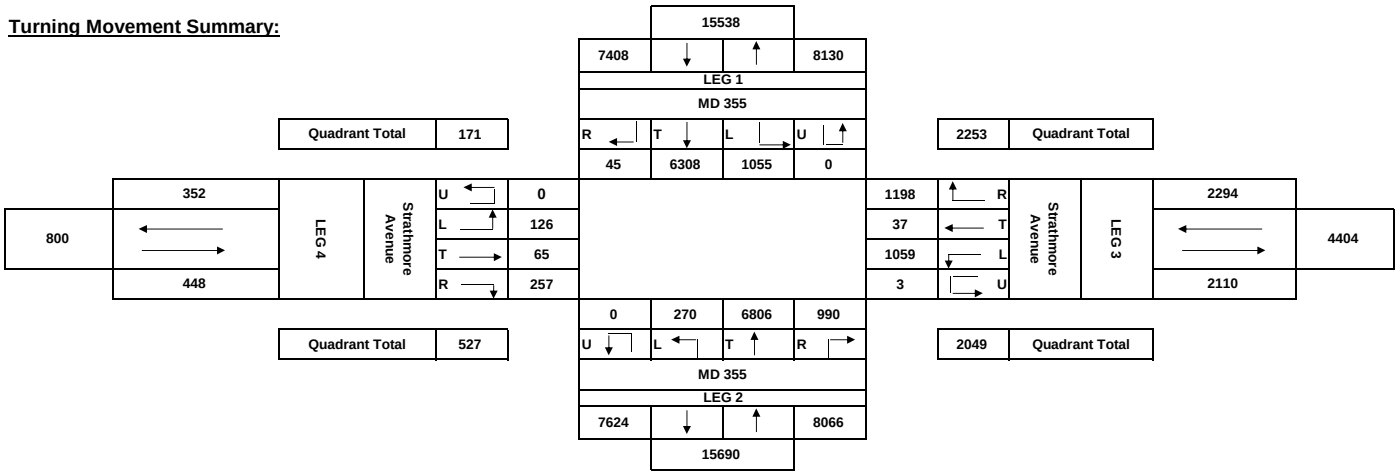

Comments:

AM Peak Hour :

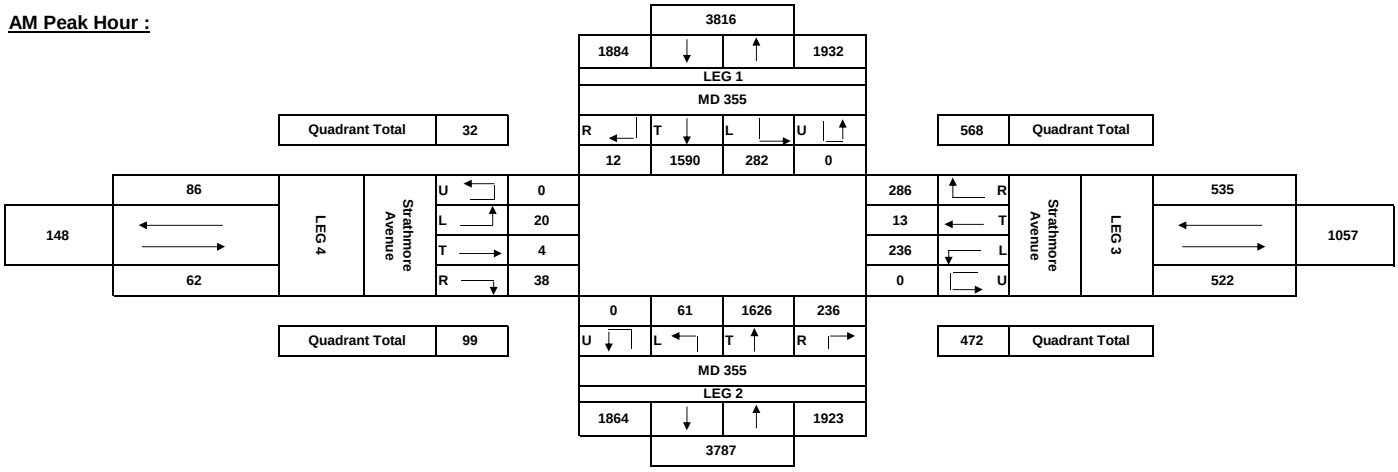

PM Peak Hour :

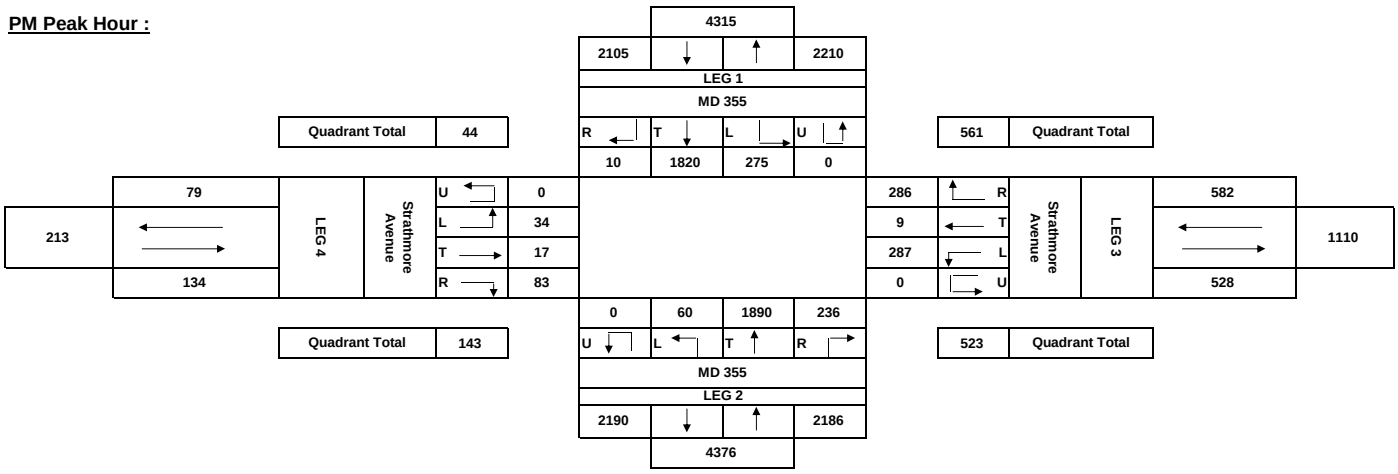

Maryland State Highway Administration
Highway Information Services Division
Turning Counts Study - Field Sheet

Request No.:
Job No.:

Location: MD 355 @ Tuckerman
Date: 11/5/2011 Saturday
Recorder: AM
Interval (dd) : 15
(In Minutes)

County: Montgomery
Town: North Bethesda
Weather: Sunny

PEAK HOURS	AM PERIOD 6:00AM-12:00PM	Start	End	Volume	PM PERIOD 12:00PM-7:00PM	Start	End	Volume
		11:00	12:00	4013		12:45	13:45	0

Street Name-->	MD 355				MD 355				Tuckerman Lane				Tuckerman Lane				
HOUR	From North				From South				From East				From West				GRAND
ENDING	L	T	R	TOT	L	T	R	TOT	L	T	R	TOT	L	T	R	TOT	TOTAL
00:15				0				0				0				0	0
00:30				0				0				0				0	0
00:45				0				0				0				0	0
01:00				0				0				0				0	0
01:15				0				0				0				0	0
01:30				0				0				0				0	0
01:45				0				0				0				0	0
02:00				0				0				0				0	0
02:15				0				0				0				0	0
02:30				0				0				0				0	0
02:45				0				0				0				0	0
03:00				0				0				0				0	0
03:15				0				0				0				0	0
03:30				0				0				0				0	0
03:45				0				0				0				0	0
04:00				0				0				0				0	0
04:15				0				0				0				0	0
04:30				0				0				0				0	0
04:45				0				0				0				0	0
05:00				0				0				0				0	0
05:15				0				0				0				0	0
05:30				0				0				0				0	0
05:45				0				0				0				0	0
06:00				0				0				0				0	0
06:15				0				0				0				0	0
06:30				0				0				0				0	0
06:45				0				0				0				0	0
07:00				0				0				0				0	0
07:15				0				0				0				0	0
07:30				0				0				0				0	0
07:45				0				0				0				0	0
08:00				0				0				0				0	0
08:15				0				0				0				0	0
08:30				0				0				0				0	0
08:45				0				0				0				0	0
09:00				0				0				0				0	0
09:15				0				0				0				0	0
09:30				0				0				0				0	0
09:45				0				0				0				0	0
10:00				0				0				0				0	0
10:15	25	210	85	320	45	265	6	316	1	30	35	66	99	34	22	155	857
10:30	20	217	117	354	44	298	5	347	4	37	28	69	69	13	33	115	885
10:45	26	226	123	375	26	323	7	356	7	23	37	67	80	30	30	140	938
11:00	19	262	96	377	18	347	6	371	4	22	36	62	101	20	26	147	957
11:15	**32**	**257**	**79**	**368**	**29**	**340**	**5**	**374**	**9**	**33**	**29**	**71**	**69**	**27**	**26**	**122**	**935**
11:30	**24**	**269**	**101**	**394**	**23**	**312**	**7**	**342**	**14**	**39**	**41**	**94**	**75**	**46**	**41**	**162**	**992**
11:45	**31**	**245**	**99**	**375**	**25**	**381**	**5**	**411**	**5**	**23**	**42**	**70**	**75**	**38**	**28**	**141**	**997**
12:00	**24**	**292**	**134**	**450**	**23**	**377**	**9**	**409**	**3**	**13**	**41**	**57**	**93**	**46**	**34**	**173**	**1089**
12:15	34	310	90	434	39	400	3	442	10	38	40	88	102	39	25	166	1130
12:30	29	270	119	418	23	357	1	381	6	21	44	71	104	43	24	171	1041
12:45	27	287	104	418	34	360	1	395	3	12	47	62	86	40	24	150	1025
13:00	**35**	**309**	**117**	**461**	**39**	**419**	**7**	**465**	**6**	**28**	**44**	**78**	**125**	**26**	**32**	**183**	**1187**
13:15	**28**	**318**	**127**	**473**	**41**	**398**	**9**	**448**	**4**	**22**	**34**	**60**	**102**	**35**	**28**	**165**	**1146**
13:30	**33**	**338**	**141**	**512**	**31**	**373**	**3**	**407**	**5**	**25**	**13**	**43**	**97**	**26**	**32**	**155**	**1117**
13:45	**31**	**348**	**132**	**511**	**28**	**350**	**8**	**386**	**7**	**22**	**23**	**52**	**79**	**20**	**34**	**133**	**1082**
14:00	36	348	122	506	27	393	6	426	7	23	16	46	98	28	24	150	1128
14:15				0				0				0				0	0
14:30				0				0				0				0	0
14:45				0				0				0				0	0
15:00				0				0				0				0	0
15:15				0				0				0				0	0
15:30				0				0				0				0	0
15:45				0				0				0				0	0
16:00				0				0				0				0	0
16:15				0				0				0				0	0
16:30				0				0				0				0	0
16:45				0				0				0				0	0
17:00				0				0				0				0	0
17:15				0				0				0				0	0
17:30				0				0				0				0	0
17:45				0				0				0				0	0
18:00				0				0				0				0	0
18:15				0				0				0				0	0
18:30				0				0				0				0	0
18:45				0				0				0				0	0
19:00				0				0				0				0	0
19:15				0				0				0				0	0
19:30				0				0				0				0	0
19:45				0				0				0				0	0
20:00				0				0				0				0	0
20:15				0				0				0				0	0
20:30				0				0				0				0	0
20:45				0				0				0				0	0
21:00				0				0				0				0	0
TOTAL	**454**	**4506**	**1786**	**6746**	**495**	**5693**	**88**	**6276**	**95**	**411**	**550**	**1056**	**1454**	**511**	**463**	**2428**	**16506**
AM Peak Vol	111	1063	413	1587	100	1410	26	1536	31	108	153	292	312	157	129	598	4013
PM Peak Vol	127	1313	517	1957	139	1540	27	1706	22	97	114	233	403	107	126	636	4532

Maryland State Highway Administration
Highway Information Services Division
Turning Counts Study - Field Sheet

Request No.:
Job No.:

Location: MD 355 @ Tuckerman
Date: 11/5/2011 Saturday
Recorder: AM
Interval (dd) : 15
(In Minutes)

County: Montgomery
Town: North Bethesda
Weather: Sunny

PEAK HOURS	AM PERIOD 6:00AM-12:00PM	Start	End	Volume	PM PERIOD 12:00PM-7:00PM	Start	End	Volume
		11:00	12:00	4013		12:45	13:45	0

PEDESTRIAN SCHOOL CHILDREN & U-TURN BREAKDOWN

Hour	MD 355			MD 355			Tuckerman Lane			Tuckerman Lane		
Ending	S.C.	PED.	U.T.	S.C.	PED.	U.T.	S.C.	PED.	U.T.	S.C.	PED.	U.T.
00:15												
00:30												
00:45												
01:00												
01:15												
01:30												
01:45												
02:00												
02:15												
02:30												
02:45												
03:00												
03:15												
03:30												
03:45												
04:00												
04:15												
04:30												
04:45												
05:00												
05:15												
05:30												
05:45												
06:00												
06:15												
06:30												
06:45												
07:00												
07:15												
07:30												
07:45												
08:00												
08:15												
08:30												
08:45												
09:00												
09:15												
09:30												
09:45												
10:00			1									0
10:15			0									0
10:30			1									0
10:45			0									0
11:00			0									0
11:15			1									0
11:30			1									0
11:45			3									5
12:00			0									0
12:15			0									0
12:30			0									0
12:45			0									1
13:00			0									0
13:15			0									1
13:30			0									0
13:45			0									0
14:00			0									0
14:15												
14:30												
14:45												
15:00												
15:15												
15:30												
15:45												
16:00												
16:15												
16:30												
16:45												
17:00												
17:15												
17:30												
17:45												
18:00												
18:15												
18:30												
18:45												
19:00												
19:15												
19:30												
19:45												
20:00												
20:15												
20:30												
20:45												
21:00												
TOTAL	**0**	**0**	**7**	**0**	**0**	**0**	**0**	**0**	**0**	**0**	**0**	**7**
AM Peak Vol	0	0	5	0	0	0	0	0	0	0	0	5
PM Peak Vol	0	0	0	0	0	0	0	0	0	0	0	1

Maryland State Highway Administration
Highway Information Services Division
Turning Counts Study - Field Sheet

Request No.:
Job No.:

Location: MD 355 @ Tuckerman
Date: 11/5/2011 Saturday
Recorder: AM
Interval (dd) : 15
(In Minutes)

County: Montgomery
Town: North Bethesda
Weather: Sunny

PEAK HOURS	AM PERIOD 6:00AM-12:00PM	Start	End	Volume	PM PERIOD 12:00PM-7:00PM	Start	End	Volume
		11:00	12:00	4013		12:45	13:45	0

Turning Movement Summary:

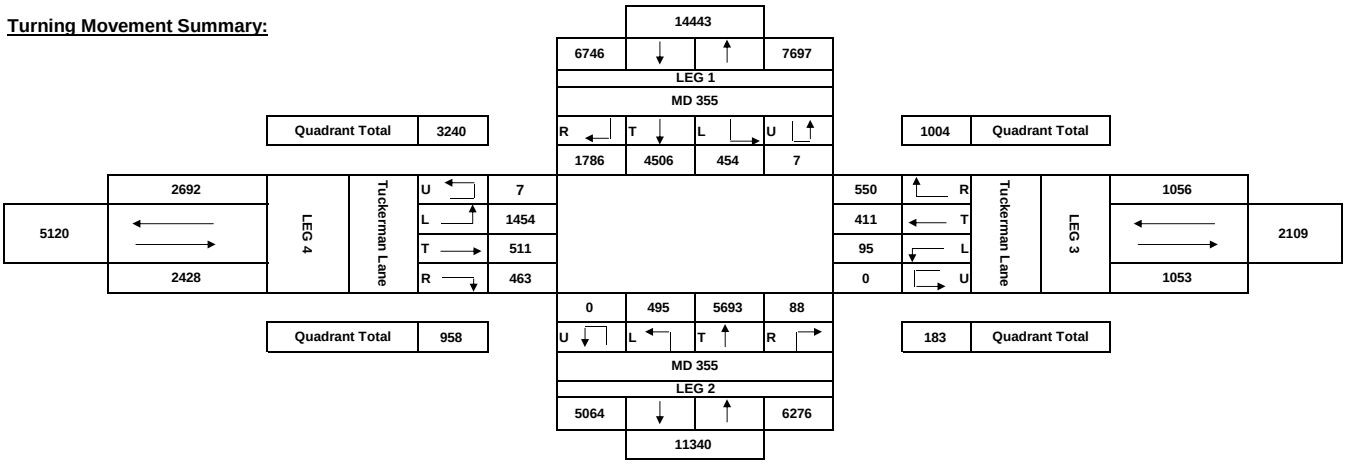

Comments:

AM Peak Hour :

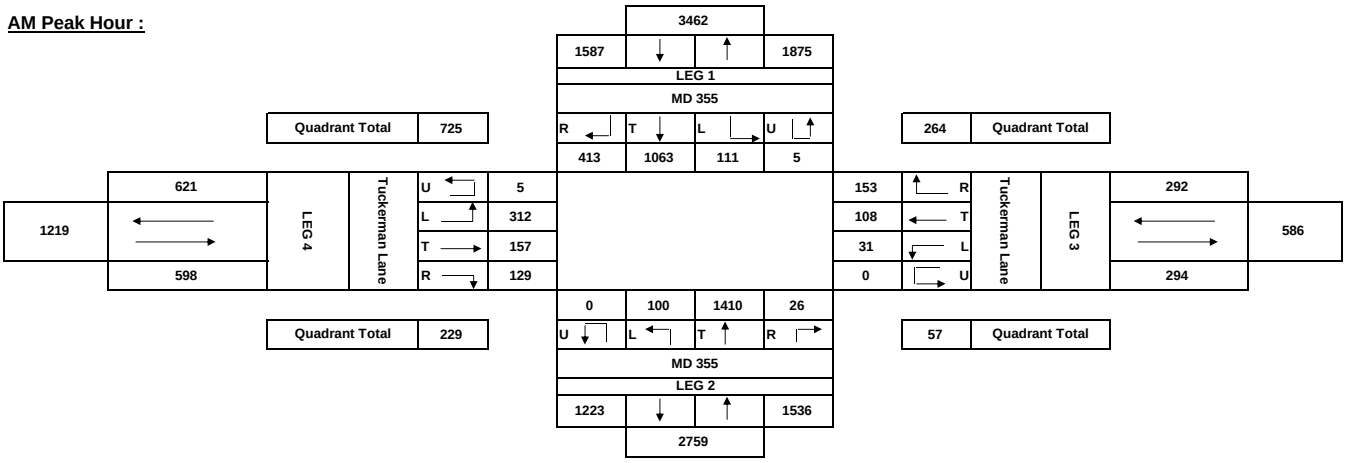

PM Peak Hour :

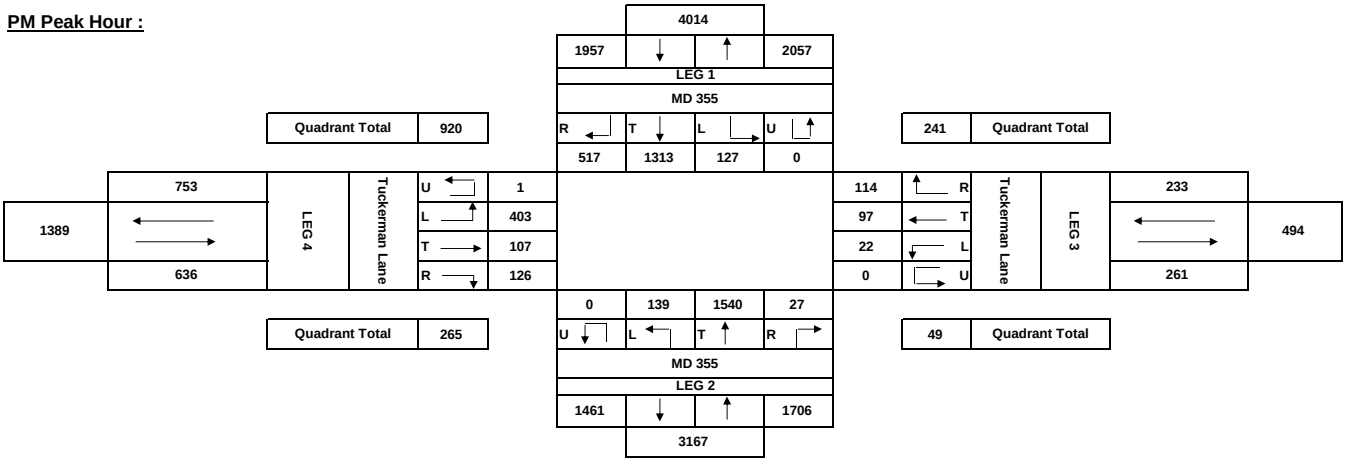

Maryland State Highway Administration
Highway Information Services Division
Turning Counts Study - Field Sheet

Request No.:
Job No.:

Location: MD 355 and Bou
Date: 10/15/2011 Saturday
Recorder: AM
Interval (dd) : 15
(In Minutes)

County: Montgomery
Town: North Bethesda
Weather: Sunny

PEAK HOURS	AM PERIOD 6:00AM-12:00PM	Start	End	Volume	PM PERIOD 12:00PM-7:00PM	Start	End	Volume
		11:00	12:00	4518		12:45	13:45	0

Street Name-->	MD 355				MD 355				Bou				Bou				
HOUR	From North				From South				From East				From West				GRAND
ENDING	L	T	R	TOT	L	T	R	TOT	L	T	R	TOT	L	T	R	TOT	TOTAL
00:15				0				0				0				0	0
00:30				0				0				0				0	0
00:45				0				0				0				0	0
01:00				0				0				0				0	0
01:15				0				0				0				0	0
01:30				0				0				0				0	0
01:45				0				0				0				0	0
02:00				0				0				0				0	0
02:15				0				0				0				0	0
02:30				0				0				0				0	0
02:45				0				0				0				0	0
03:00				0				0				0				0	0
03:15				0				0				0				0	0
03:30				0				0				0				0	0
03:45				0				0				0				0	0
04:00				0				0				0				0	0
04:15				0				0				0				0	0
04:30				0				0				0				0	0
04:45				0				0				0				0	0
05:00				0				0				0				0	0
05:15				0				0				0				0	0
05:30				0				0				0				0	0
05:45				0				0				0				0	0
06:00				0				0				0				0	0
06:15				0				0				0				0	0
06:30				0				0				0				0	0
06:45				0				0				0				0	0
07:00				0				0				0				0	0
07:15				0				0				0				0	0
07:30				0				0				0				0	0
07:45				0				0				0				0	0
08:00				0				0				0				0	0
08:15				0				0				0				0	0
08:30				0				0				0				0	0
08:45				0				0				0				0	0
09:00				0				0				0				0	0
09:15				0				0				0				0	0
09:30				0				0				0				0	0
09:45				0				0				0				0	0
10:00				0				0				0				0	0
10:15	25	277	2	304	23	347	71	441	104	5	28	137	3	6	8	17	899
10:30	34	309	5	348	28	355	60	443	92	1	31	124	5	4	16	25	940
10:45	32	320	3	355	19	384	66	469	90	6	30	126	6	7	15	28	978
11:00	44	338	8	390	20	385	79	484	104	9	26	139	6	6	10	22	1035
11:15	**52**	**358**	**2**	**412**	**15**	**435**	**81**	**531**	**103**	**8**	**32**	**143**	**5**	**9**	**15**	**29**	**1115**
11:30	**41**	**388**	**2**	**431**	**24**	**433**	**93**	**550**	**124**	**13**	**19**	**156**	**9**	**3**	**3**	**15**	**1152**
11:45	**49**	**354**	**25**	**428**	**26**	**431**	**73**	**530**	**123**	**8**	**24**	**155**	**9**	**8**	**16**	**33**	**1146**
12:00	**39**	**397**	**4**	**440**	**25**	**401**	**69**	**495**	**107**	**6**	**33**	**146**	**6**	**6**	**12**	**24**	**1105**
12:15	54	405	6	465	27	506	79	612	134	6	36	176	9	3	18	30	1283
12:30	41	427	2	470	29	487	79	595	111	8	47	166	10	5	19	34	1265
12:45	45	443	5	493	16	497	78	591	100	6	42	148	8	3	21	32	1264
13:00	**53**	**454**	**4**	**511**	**30**	**448**	**61**	**539**	**111**	**4**	**37**	**152**	**11**	**5**	**12**	**28**	**1230**
13:15	**46**	**455**	**1**	**502**	**20**	**490**	**78**	**588**	**121**	**9**	**38**	**168**	**5**	**7**	**24**	**36**	**1294**
13:30	**51**	**447**	**4**	**502**	**23**	**479**	**78**	**580**	**119**	**5**	**35**	**159**	**6**	**5**	**22**	**33**	**1274**
13:45	**45**	**460**	**3**	**508**	**18**	**497**	**83**	**598**	**113**	**1**	**33**	**147**	**8**	**7**	**18**	**33**	**1286**
14:00	53	438	7	498	18	450	84	552	122	3	24	149	9	4	12	25	1224
14:15				0				0				0				0	0
14:30				0				0				0				0	0
14:45				0				0				0				0	0
15:00				0				0				0				0	0
15:15				0				0				0				0	0
15:30				0				0				0				0	0
15:45				0				0				0				0	0
16:00				0				0				0				0	0
16:15				0				0				0				0	0
16:30				0				0				0				0	0
16:45				0				0				0				0	0
17:00				0				0				0				0	0
17:15				0				0				0				0	0
17:30				0				0				0				0	0
17:45				0				0				0				0	0
18:00				0				0				0				0	0
18:15				0				0				0				0	0
18:30				0				0				0				0	0
18:45				0				0				0				0	0
19:00				0				0				0				0	0
19:15				0				0				0				0	0
19:30				0				0				0				0	0
19:45				0				0				0				0	0
20:00				0				0				0				0	0
20:15				0				0				0				0	0
20:30				0				0				0				0	0
20:45				0				0				0				0	0
21:00				0				0				0				0	0
TOTAL	**704**	**6270**	**83**	**7057**	**361**	**7025**	**1212**	**8598**	**1778**	**98**	**515**	**2391**	**115**	**88**	**241**	**444**	**18490**
AM Peak Vol	181	1497	33	1711	90	1700	316	2106	457	35	108	600	29	26	46	101	4518
PM Peak Vol	195	1816	12	2023	91	1914	300	2305	464	19	143	626	30	24	76	130	5084

Maryland State Highway Administration
Highway Information Services Division
Turning Counts Study - Field Sheet

Request No.:
Job No.:

Location: MD 355 and Bou
Date: 10/15/2011 Saturday
Recorder: AM
Interval (dd) : 15
(In Minutes)

County: Montgomery
Town: North Bethesda
Weather: Sunny

PEAK HOURS	AM PERIOD 6:00AM-12:00PM	Start	End	Volume	PM PERIOD 12:00PM-7:00PM	Start	End	Volume
		11:00	12:00	4518		12:45	13:45	0

PEDESTRIAN SCHOOL CHILDREN & U-TURN BREAKDOWN

Hour	MD 355			MD 355			Bou			Bou		
Ending	S.C.	PED.	U.T.	S.C.	PED.	U.T.	S.C.	PED.	U.T.	S.C.	PED.	U.T.
00:15												
00:30												
00:45												
01:00												
01:15												
01:30												
01:45												
02:00												
02:15												
02:30												
02:45												
03:00												
03:15												
03:30												
03:45												
04:00												
04:15												
04:30												
04:45												
05:00												
05:15												
05:30												
05:45												
06:00												
06:15												
06:30												
06:45												
07:00												
07:15												
07:30												
07:45												
08:00												
08:15												
08:30												
08:45												
09:00												
09:15												
09:30												
09:45												
10:00												
10:15												3
10:30												1
10:45												4
11:00												5
11:15												5
11:30												0
11:45												2
12:00												3
12:15												6
12:30												6
12:45												5
13:00												3
13:15												4
13:30												5
13:45												2
14:00												5
14:15												
14:30												
14:45												
15:00												
15:15												
15:30												
15:45												
16:00												
16:15												
16:30												
16:45												
17:00												
17:15												
17:30												
17:45												
18:00												
18:15												
18:30												
18:45												
19:00												
19:15												
19:30												
19:45												
20:00												
20:15												
20:30												
20:45												
21:00												
TOTAL	**0**	**0**	**0**	**0**	**0**	**0**	**0**	**0**	**0**	**0**	**0**	**59**
AM Peak Vol	0	0	0	0	0	0	0	0	0	0	0	10
PM Peak Vol	0	0	0	0	0	0	0	0	0	0	0	14

Maryland State Highway Administration
Highway Information Services Division
Turning Counts Study - Field Sheet

Request No.:
Job No.:

Location: MD 355 and Bou
Date: 10/15/2011 Saturday
Recorder: AM
Interval (dd) : 15
(In Minutes)

County: Montgomery
Town: North Bethesda
Weather: Sunny

PEAK HOURS	AM PERIOD 6:00AM-12:00PM	Start	End	Volume	PM PERIOD 12:00PM-7:00PM	Start	End	Volume
		11:00	12:00	4518		12:45	13:45	0

Turning Movement Summary:

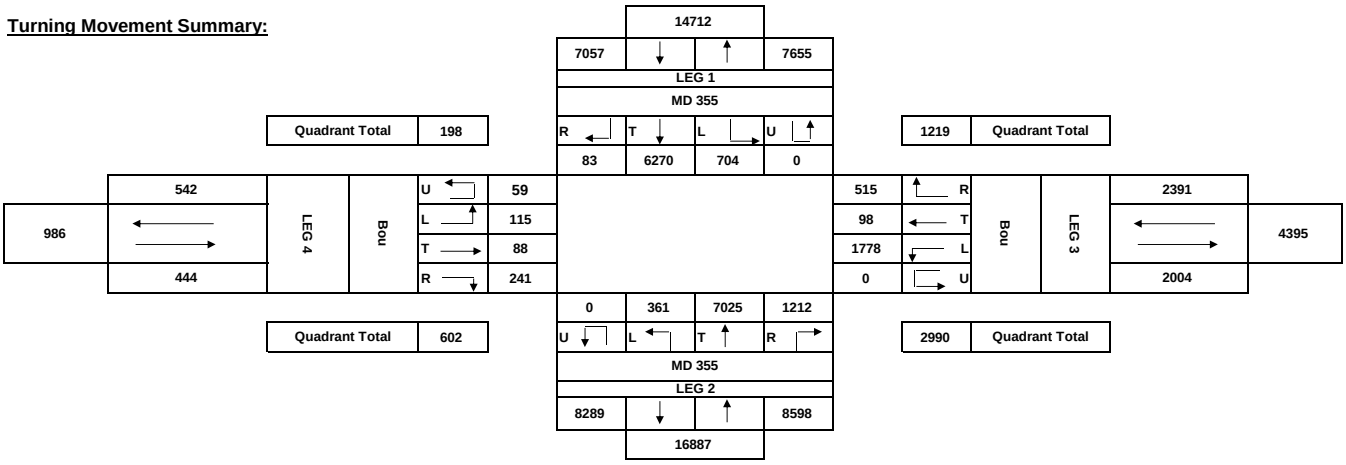

Comments:

AM Peak Hour :

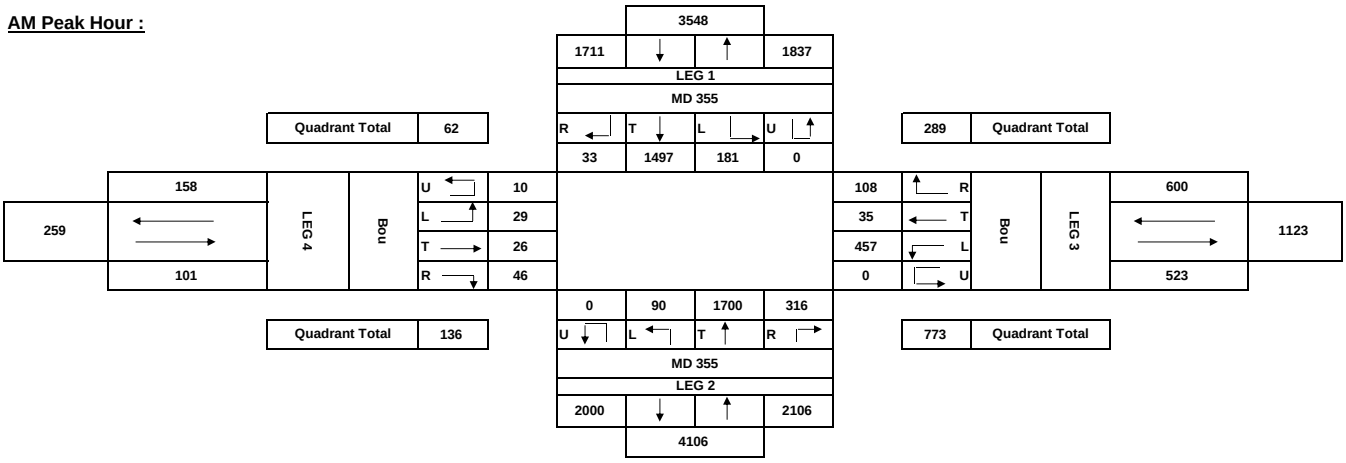

PM Peak Hour :

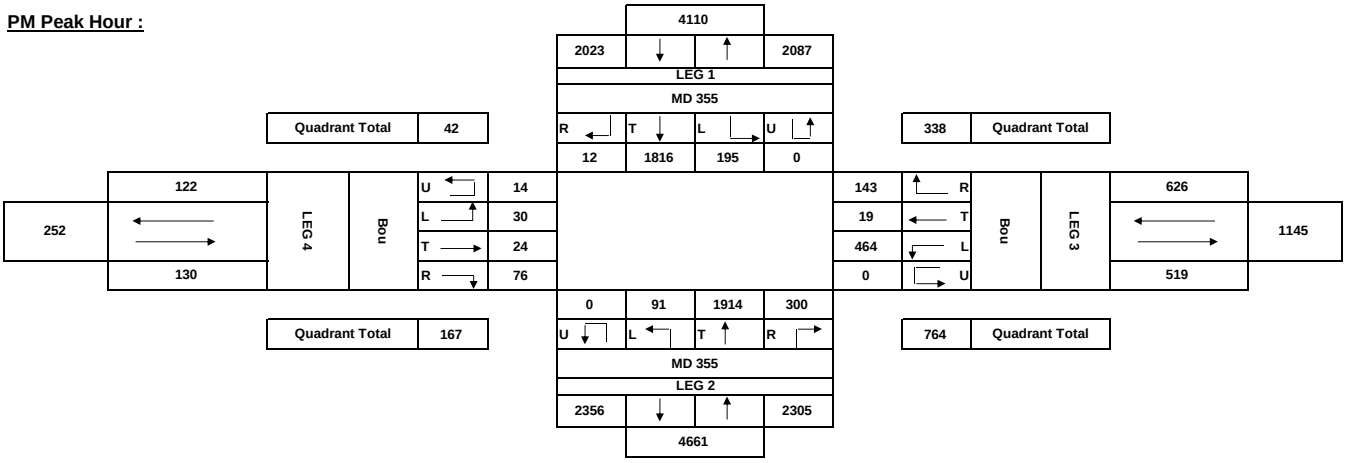

Maryland State Highway Administration
Highway Information Services Division
Turning Counts Study - Field Sheet

Request No.:
Job No.:

Location: MD 355 and Edson Ln
Date: 10/22/2011 Saturday
Recorder: AM/AN
Interval (dd) : 15
(In Minutes)

County: Montgomery
Town: North Bethesda
Weather: Cloudy

PEAK HOURS	AM PERIOD 6:00AM-12:00PM	Start	End	Volume	PM PERIOD 12:00PM-7:00PM	Start	End	Volume
		11:00	12:00	4107		13:00	14:00	0

Street Name-->	MD 355				MD 355				Edson Ln				Edson Ln				
HOUR	From North				From South				From East				From West				GRAND
ENDING	L	T	R	TOT	L	T	R	TOT	L	T	R	TOT	L	T	R	TOT	TOTAL
00:15				0				0				0				0	0
00:30				0				0				0				0	0
00:45				0				0				0				0	0
01:00				0				0				0				0	0
01:15				0				0				0				0	0
01:30				0				0				0				0	0
01:45				0				0				0				0	0
02:00				0				0				0				0	0
02:15				0				0				0				0	0
02:30				0				0				0				0	0
02:45				0				0				0				0	0
03:00				0				0				0				0	0
03:15				0				0				0				0	0
03:30				0				0				0				0	0
03:45				0				0				0				0	0
04:00				0				0				0				0	0
04:15				0				0				0				0	0
04:30				0				0				0				0	0
04:45				0				0				0				0	0
05:00				0				0				0				0	0
05:15				0				0				0				0	0
05:30				0				0				0				0	0
05:45				0				0				0				0	0
06:00				0				0				0				0	0
06:15				0				0				0				0	0
06:30				0				0				0				0	0
06:45				0				0				0				0	0
07:00				0				0				0				0	0
07:15				0				0				0				0	0
07:30				0				0				0				0	0
07:45				0				0				0				0	0
08:00				0				0				0				0	0
08:15				0				0				0				0	0
08:30				0				0				0				0	0
08:45				0				0				0				0	0
09:00				0				0				0				0	0
09:15				0				0				0				0	0
09:30				0				0				0				0	0
09:45				0				0				0				0	0
10:00				0				0				0				0	0
10:15	7	241	12	260	16	415	51	482	17	0	5	22	16	1	27	44	808
10:30	3	323	11	337	11	412	60	483	27	0	11	38	8	0	37	45	903
10:45	6	333	3	342	9	397	56	462	36	0	5	41	12	0	27	39	884
11:00	8	339	6	353	24	467	66	557	30	0	10	40	18	0	31	49	999
11:15	3	371	10	384	19	394	72	485	30	0	13	43	15	0	39	54	966
11:30	7	390	7	404	19	429	67	515	45	0	8	53	17	0	32	49	1021
11:45	6	365	9	380	35	451	64	550	53	0	13	66	27	0	53	80	1076
12:00	8	398	11	417	23	409	74	506	38	0	17	55	23	0	43	66	1044
12:15	9	405	13	427	22	464	91	577	44	0	21	65	22	0	49	71	1140
12:30	9	391	7	407	9	437	93	539	41	0	8	49	18	0	45	63	1058
12:45	7	414	13	434	9	533	71	613	60	0	12	72	17	0	35	52	1171
13:00	7	428	16	451	19	499	80	598	62	0	19	81	22	0	50	72	1202
13:15	6	420	13	439	20	463	71	554	62	0	19	81	25	0	42	67	1141
13:30	4	453	8	465	13	449	84	546	56	0	24	80	22	0	50	72	1163
13:45	4	426	12	442	17	476	81	574	59	0	29	88	21	1	36	58	1162
14:00	7	457	9	473	17	478	97	592	73	0	27	100	24	0	38	62	1227
14:15				0				0				0				0	0
14:30				0				0				0				0	0
14:45				0				0				0				0	0
15:00				0				0				0				0	0
15:15				0				0				0				0	0
15:30				0				0				0				0	0
15:45				0				0				0				0	0
16:00				0				0				0				0	0
16:15				0				0				0				0	0
16:30				0				0				0				0	0
16:45				0				0				0				0	0
17:00				0				0				0				0	0
17:15				0				0				0				0	0
17:30				0				0				0				0	0
17:45				0				0				0				0	0
18:00				0				0				0				0	0
18:15				0				0				0				0	0
18:30				0				0				0				0	0
18:45				0				0				0				0	0
19:00				0				0				0				0	0
19:15				0				0				0				0	0
19:30				0				0				0				0	0
19:45				0				0				0				0	0
20:00				0				0				0				0	0
20:15				0				0				0				0	0
20:30				0				0				0				0	0
20:45				0				0				0				0	0
21:00				0				0				0				0	0
TOTAL	**101**	**6154**	**160**	**6415**	**282**	**7173**	**1178**	**8633**	**733**	**0**	**241**	**974**	**307**	**2**	**634**	**943**	**16965**
AM Peak Vol	24	1524	37	1585	96	1683	277	2056	166	0	51	217	82	0	167	249	4107
PM Peak Vol	21	1756	42	1819	67	1866	333	2266	250	0	99	349	92	1	166	259	4693

PEDESTRIAN SCHOOL CHILDREN & U-TURN BREAKDOWN

Hour	MD 355			MD 355			Edson Ln			Edson Ln		
Ending	**S.C.**	**PED.**	**U.T.**	**S.C.**	**PED.**	**U.T.**	**S.C.**	**PED.**	**U.T.**	**S.C.**	**PED.**	**U.T.**
00:15												
00:30												
00:45												
01:00												
01:15												
01:30												
01:45												
02:00												
02:15												
02:30												
02:45												
03:00												
03:15												
03:30												
03:45												
04:00												
04:15												
04:30												
04:45												
05:00												
05:15												
05:30												
05:45												
06:00												
06:15												
06:30												
06:45												
07:00												
07:15												
07:30												
07:45												
08:00												
08:15												
08:30												
08:45												
09:00												
09:15												
09:30												
09:45												
10:00												
10:15			0			2						
10:30			1			4						
10:45			0			1						
11:00			0			3						
11:15			0			1						
11:30			0			3						
11:45			0			2						
12:00			2			0						
12:15			1			3						
12:30			1			0						
12:45			1			4						
13:00			1			2						
13:15			1			0						
13:30			1			0						
13:45			3			3						
14:00			2			1						
14:15												
14:30												
14:45												
15:00												
15:15												
15:30												
15:45												
16:00												
16:15												
16:30												
16:45												
17:00												
17:15												
17:30												
17:45												
18:00												
18:15												
18:30												
18:45												
19:00												
19:15												
19:30												
19:45												
20:00												
20:15												
20:30												
20:45												
21:00												
TOTAL	**0**	**0**	**14**	**0**	**0**	**29**	**0**	**0**	**0**	**0**	**0**	**0**
AM Peak Vol	0	0	2	0	0	6	0	0	0	0	0	0
PM Peak Vol	0	0	7	0	0	4	0	0	0	0	0	0

Turning Movement Summary:

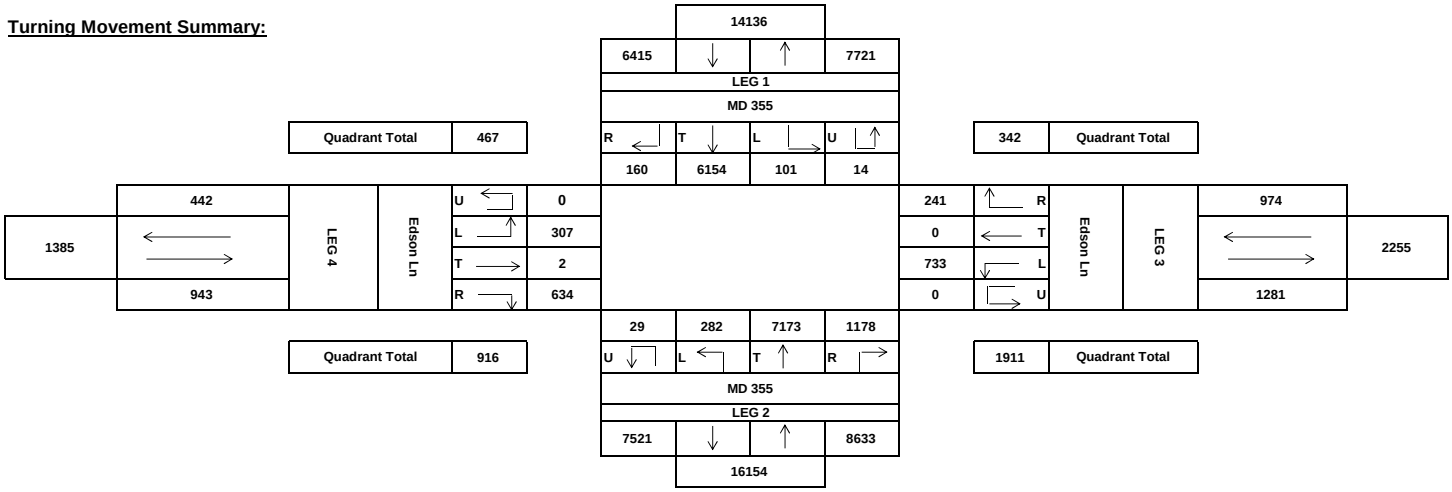

Comments:

AM Peak Hour :

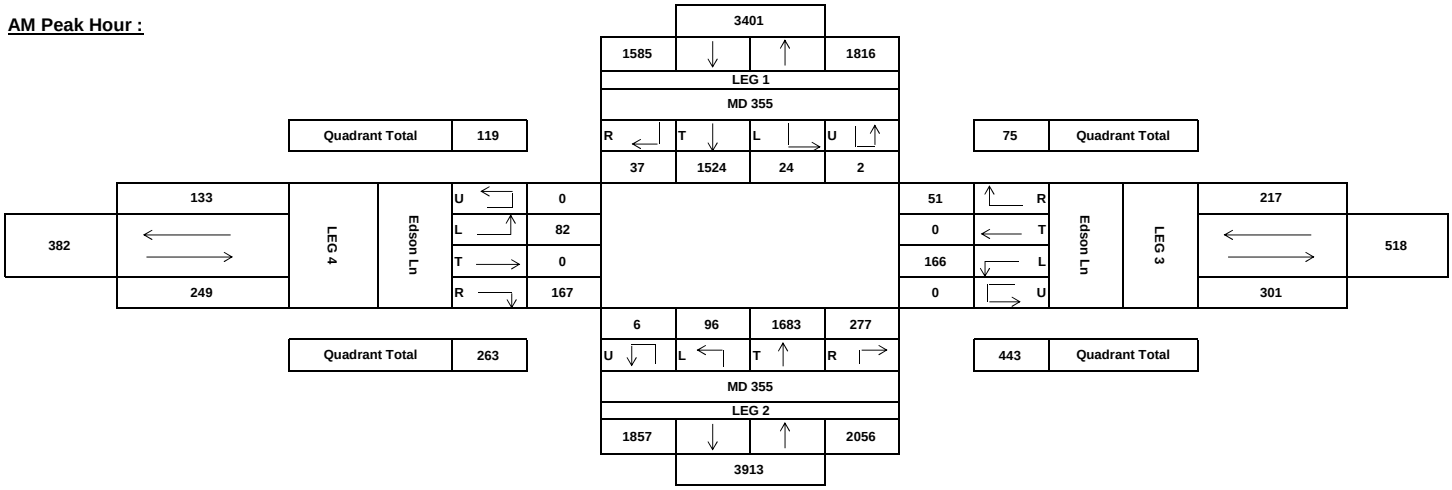

PM Peak Hour :

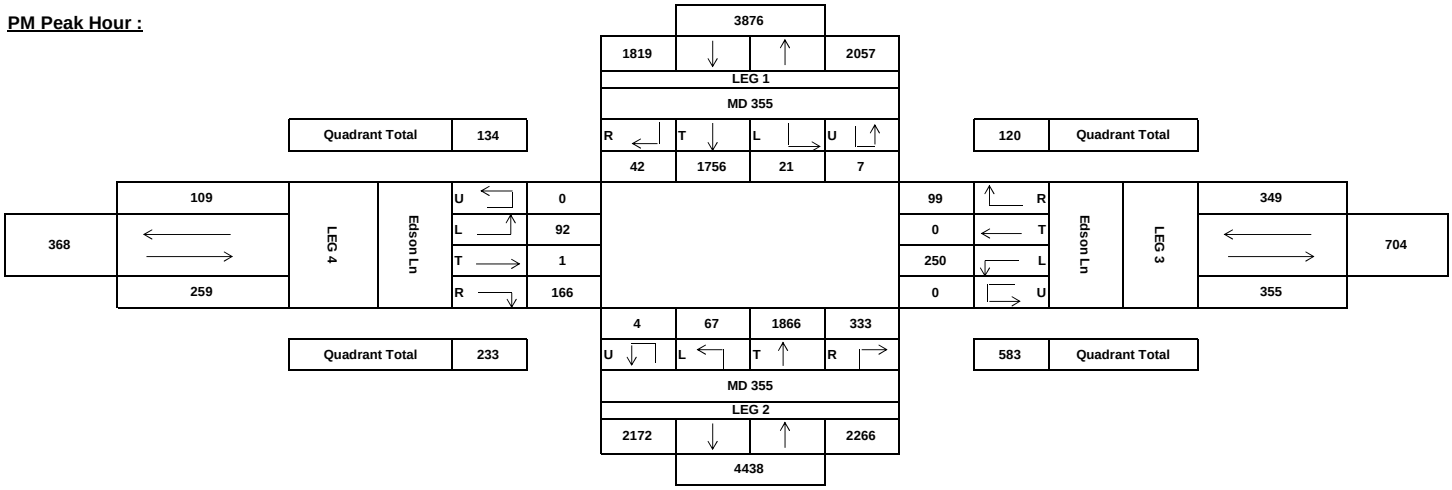

Maryland State Highway Administration
Highway Information Services Division
Turning Counts Study - Field Sheet

Request No.:
Job No.:

Location: MD 355 and MD 187
Date: 10/8/2011 Saturday
Recorder: AM
Interval (dd) : 15
(In Minutes)

County: Montgomery
Town: North Bethesda
Weather: Sunny

PEAK HOURS	AM PERIOD 6:00AM-12:00PM	Start	End	Volume	PM PERIOD 12:00PM-7:00PM	Start	End	Volume
		11:00	12:00	4412		13:00	14:00	0

Street Name-->	MD 355				MD 355				MD 187				MD 187				
HOUR	From North				From South				From East				From West				GRAND
ENDING	L	T	R	TOT	L	T	R	TOT	L	T	R	TOT	L	T	R	TOT	TOTAL
00:15				0				0				0				0	0
00:30				0				0				0				0	0
00:45				0				0				0				0	0
01:00				0				0				0				0	0
01:15				0				0				0				0	0
01:30				0				0				0				0	0
01:45				0				0				0				0	0
02:00				0				0				0				0	0
02:15				0				0				0				0	0
02:30				0				0				0				0	0
02:45				0				0				0				0	0
03:00				0				0				0				0	0
03:15				0				0				0				0	0
03:30				0				0				0				0	0
03:45				0				0				0				0	0
04:00				0				0				0				0	0
04:15				0				0				0				0	0
04:30				0				0				0				0	0
04:45				0				0				0				0	0
05:00				0				0				0				0	0
05:15				0				0				0				0	0
05:30				0				0				0				0	0
05:45				0				0				0				0	0
06:00				0				0				0				0	0
06:15				0				0				0				0	0
06:30				0				0				0				0	0
06:45				0				0				0				0	0
07:00				0				0				0				0	0
07:15				0				0				0				0	0
07:30				0				0				0				0	0
07:45				0				0				0				0	0
08:00				0				0				0				0	0
08:15				0				0				0				0	0
08:30				0				0				0				0	0
08:45				0				0				0				0	0
09:00				0				0				0				0	0
09:15				0				0				0				0	0
09:30				0				0				0				0	0
09:45				0				0				0				0	0
10:00				0				0				0				0	0
10:15	14	226	82	322	43	244	6	293	9	40	15	64	99	27	23	149	828
10:30	16	275	65	356	54	288	4	346	13	51	11	75	104	21	26	151	928
10:45	16	265	82	363	47	286	8	341	13	37	16	66	122	20	44	186	956
11:00	27	301	101	429	49	313	12	374	20	29	18	67	127	27	43	197	1067
11:15	**11**	**341**	**78**	**430**	**57**	**284**	**10**	**351**	**19**	**34**	**18**	**71**	**129**	**26**	**35**	**190**	**1042**
11:30	**23**	**338**	**129**	**490**	**54**	**277**	**5**	**336**	**22**	**28**	**25**	**75**	**130**	**23**	**40**	**193**	**1094**
11:45	**24**	**339**	**96**	**459**	**36**	**304**	**12**	**352**	**20**	**37**	**25**	**82**	**145**	**21**	**39**	**205**	**1098**
12:00	**29**	**389**	**153**	**571**	**46**	**290**	**10**	**346**	**18**	**39**	**12**	**69**	**126**	**28**	**38**	**192**	**1178**
12:15	21	357	86	464	53	243	12	308	25	38	14	77	145	18	33	196	1045
12:30	18	366	87	471	42	301	9	352	19	46	12	77	116	19	58	193	1093
12:45	31	342	89	462	43	278	9	330	18	41	15	74	143	31	39	213	1079
13:00	24	404	110	538	38	263	10	311	22	34	16	72	135	29	45	209	1130
13:15	**31**	**400**	**127**	**558**	**42**	**324**	**4**	**370**	**15**	**42**	**14**	**71**	**126**	**36**	**54**	**216**	**1215**
13:30	**30**	**377**	**117**	**524**	**49**	**288**	**13**	**350**	**13**	**40**	**23**	**76**	**151**	**18**	**51**	**220**	**1170**
13:45	**37**	**387**	**142**	**566**	**49**	**325**	**5**	**379**	**19**	**37**	**9**	**65**	**156**	**31**	**48**	**235**	**1245**
14:00	**12**	**399**	**90**	**501**	**51**	**369**	**7**	**427**	**19**	**31**	**13**	**63**	**117**	**28**	**44**	**189**	**1180**
14:15				0				0				0				0	0
14:30				0				0				0				0	0
14:45				0				0				0				0	0
15:00				0				0				0				0	0
15:15				0				0				0				0	0
15:30				0				0				0				0	0
15:45				0				0				0				0	0
16:00				0				0				0				0	0
16:15				0				0				0				0	0
16:30				0				0				0				0	0
16:45				0				0				0				0	0
17:00				0				0				0				0	0
17:15				0				0				0				0	0
17:30				0				0				0				0	0
17:45				0				0				0				0	0
18:00				0				0				0				0	0
18:15				0				0				0				0	0
18:30				0				0				0				0	0
18:45				0				0				0				0	0
19:00				0				0				0				0	0
19:15				0				0				0				0	0
19:30				0				0				0				0	0
19:45				0				0				0				0	0
20:00				0				0				0				0	0
20:15				0				0				0				0	0
20:30				0				0				0				0	0
20:45				0				0				0				0	0
21:00				0				0				0				0	0
TOTAL	**364**	**5506**	**1634**	**7504**	**753**	**4677**	**136**	**5566**	**284**	**604**	**256**	**1144**	**2071**	**403**	**660**	**3134**	**17348**
AM Peak Vol	87	1407	456	1950	193	1155	37	1385	79	138	80	297	530	98	152	780	4412
PM Peak Vol	110	1563	476	2149	191	1306	29	1526	66	150	59	275	550	113	197	860	4810

Maryland State Highway Administration
Highway Information Services Division
Turning Counts Study - Field Sheet

Request No.:
Job No.:

Location: MD 355 and MD 187
Date: 10/8/2011 Saturday
Recorder: AM
Interval (dd) : 15
(In Minutes)

County: Montgomery
Town: North Bethesda
Weather: Sunny

PEAK HOURS	AM PERIOD 6:00AM-12:00PM	Start	End	Volume	PM PERIOD 12:00PM-7:00PM	Start	End	Volume
		11:00	12:00	4412		13:00	14:00	0

PEDESTRIAN SCHOOL CHILDREN & U-TURN BREAKDOWN

Hour	MD 355			MD 355			MD 187			MD 187		
Ending	S.C.	PED.	U.T.	S.C.	PED.	U.T.	S.C.	PED.	U.T.	S.C.	PED.	U.T.
00:15												
00:30												
00:45												
01:00												
01:15												
01:30												
01:45												
02:00												
02:15												
02:30												
02:45												
03:00												
03:15												
03:30												
03:45												
04:00												
04:15												
04:30												
04:45												
05:00												
05:15												
05:30												
05:45												
06:00												
06:15												
06:30												
06:45												
07:00												
07:15												
07:30												
07:45												
08:00												
08:15												
08:30												
08:45												
09:00												
09:15												
09:30												
09:45												
10:00												
10:15			3			0			0			0
10:30			4			4			0			3
10:45			3			2			0			2
11:00			6			2			0			1
11:15			4			3			0			0
11:30			6			5			1			0
11:45			2			3			0			1
12:00			2			2			1			0
12:15			10			5			0			2
12:30			12			4			1			0
12:45			6			7			0			1
13:00			2			4			1			0
13:15			3			0			1			1
13:30			8			2			0			2
13:45			8			5			2			2
14:00			8						1			2
14:15												
14:30												
14:45												
15:00												
15:15												
15:30												
15:45												
16:00												
16:15												
16:30												
16:45												
17:00												
17:15												
17:30												
17:45												
18:00												
18:15												
18:30												
18:45												
19:00												
19:15												
19:30												
19:45												
20:00												
20:15												
20:30												
20:45												
21:00												
TOTAL	**0**	**0**	**87**	**0**	**0**	**48**	**0**	**0**	**8**	**0**	**0**	**17**
AM Peak Vol	0	0	14	0	0	13	0	0	2	0	0	1
PM Peak Vol	0	0	27	0	0	7	0	0	4	0	0	7

Maryland State Highway Administration
Highway Information Services Division
Turning Counts Study - Field Sheet

Request No.:
Job No.:

Location: MD 355 and MD 187
Date: 10/8/2011 Saturday
Recorder: AM
Interval (dd) : 15
(In Minutes)

County: Montgomery
Town: North Bethesda
Weather: Sunny

PEAK HOURS	AM PERIOD 6:00AM-12:00PM	Start	End	Volume	PM PERIOD 12:00PM-7:00PM	Start	End	Volume
		11:00	12:00	4412		13:00	14:00	0

Turning Movement Summary:

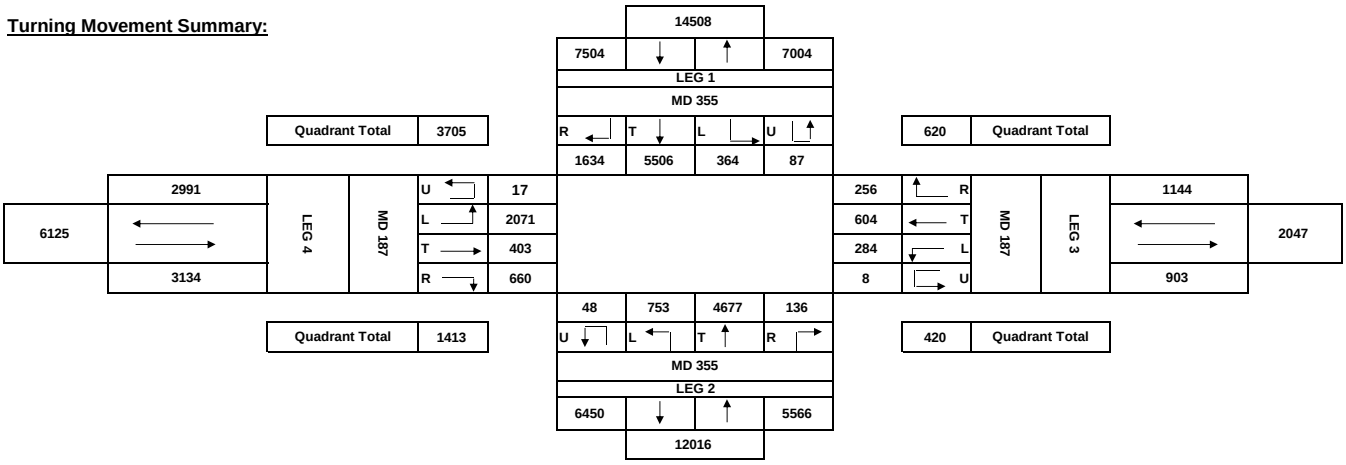

Comments:

AM Peak Hour :

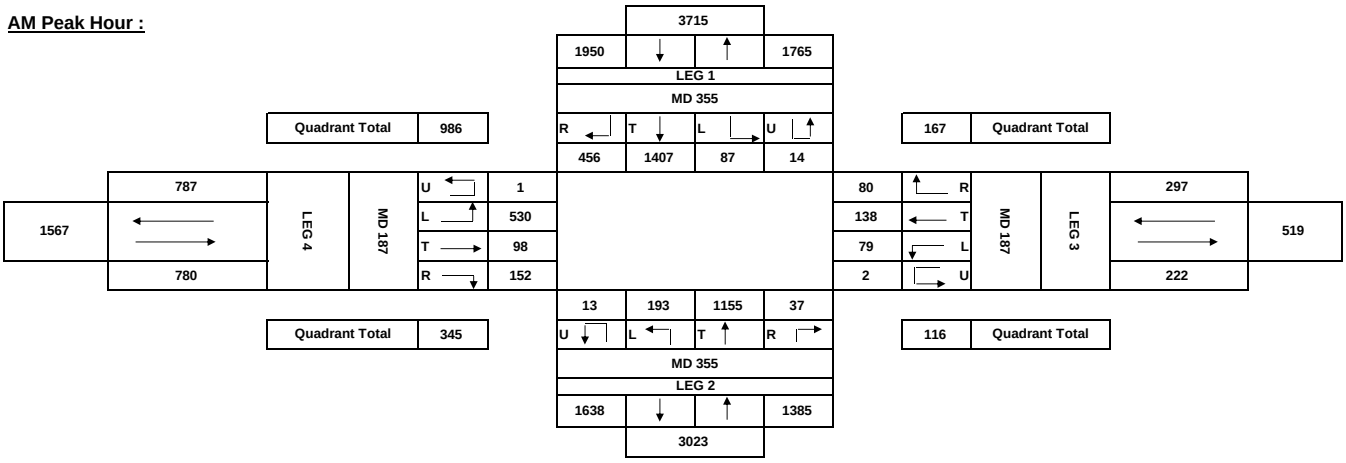

PM Peak Hour :

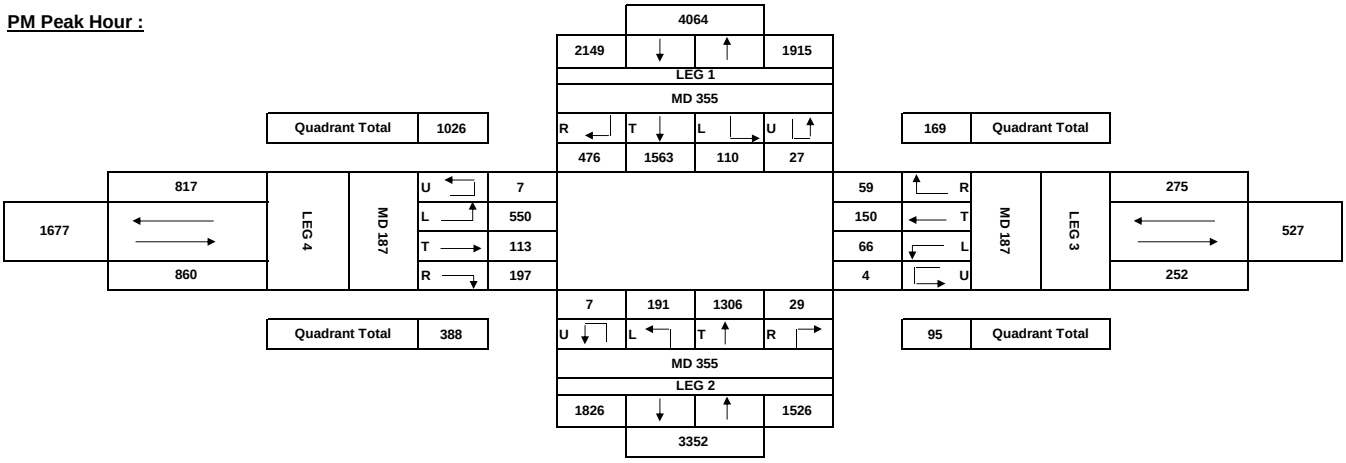

Maryland State Highway Administration
Highway Information Services Division
Turning Counts Study - Field Sheet

Request No.:
Job No.:

Location: MD 355 and Security Ln
Date: 10/22/2011 Saturday
Recorder: BH/BH
Interval (dd) : 15
(In Minutes)

County: Montgomery
Town: North Bethesda
Weather: Cloudy

PEAK HOURS	AM PERIOD 6:00AM-12:00PM	Start	End	Volume	PM PERIOD 12:00PM-7:00PM	Start	End	Volume
		11:00	12:00	3568		12:45	13:45	0

Street Name-->	MD 355				MD 355				Security Ln				Security Ln				
HOUR	From North				From South				From East				From West				GRAND
ENDING	L	T	R	TOT	L	T	R	TOT	L	T	R	TOT	L	T	R	TOT	TOTAL
00:15				0				0				0				0	0
00:30				0				0				0				0	0
00:45				0				0				0				0	0
01:00				0				0				0				0	0
01:15				0				0				0				0	0
01:30				0				0				0				0	0
01:45				0				0				0				0	0
02:00				0				0				0				0	0
02:15				0				0				0				0	0
02:30				0				0				0				0	0
02:45				0				0				0				0	0
03:00				0				0				0				0	0
03:15				0				0				0				0	0
03:30				0				0				0				0	0
03:45				0				0				0				0	0
04:00				0				0				0				0	0
04:15				0				0				0				0	0
04:30				0				0				0				0	0
04:45				0				0				0				0	0
05:00				0				0				0				0	0
05:15				0				0				0				0	0
05:30				0				0				0				0	0
05:45				0				0				0				0	0
06:00				0				0				0				0	0
06:15				0				0				0				0	0
06:30				0				0				0				0	0
06:45				0				0				0				0	0
07:00				0				0				0				0	0
07:15				0				0				0				0	0
07:30				0				0				0				0	0
07:45				0				0				0				0	0
08:00				0				0				0				0	0
08:15				0				0				0				0	0
08:30				0				0				0				0	0
08:45				0				0				0				0	0
09:00				0				0				0				0	0
09:15				0				0				0				0	0
09:30				0				0				0				0	0
09:45				0				0				0				0	0
10:00				0				0				0				0	0
10:15	23	263	11	297	11	415	25	451				0	7	2	8	17	765
10:30	20	314	11	345	15	382	18	415				0	10	0	4	14	774
10:45	35	330	5	370	15	387	21	423				0	6	2	6	14	807
11:00	40	340	20	400	19	452	24	495				0	12	2	5	19	914
11:15	40	342	11	393	19	392	22	433				0	10	4	5	19	845
11:30	42	352	6	400	30	427	23	480				0	8	6	9	23	903
11:45	55	338	7	400	27	442	26	495				0	4	2	3	9	904
12:00	66	362	10	438	18	398	44	460				0	7	5	6	18	916
12:15	41	378	12	431	27	441	39	507				0	6	4	13	23	961
12:30	57	365	15	437	15	429	29	473				0	5	6	9	20	930
12:45	71	385	8	464	17	351	141	509				0	12	12	4	28	1001
13:00	54	409	6	469	19	488	42	549				0	9	8	8	25	1043
13:15	65	399	7	471	24	432	45	501				0	11	9	7	27	999
13:30	57	394	7	458	18	442	46	506				0	8	11	8	27	991
13:45	55	423	11	489	23	490	32	545				0	6	5	5	16	1050
14:00	54	414	13	481	12	468	45	525				0	6	6	3	15	1021
14:15				0				0				0				0	0
14:30				0				0				0				0	0
14:45				0				0				0				0	0
15:00				0				0				0				0	0
15:15				0				0				0				0	0
15:30				0				0				0				0	0
15:45				0				0				0				0	0
16:00				0				0				0				0	0
16:15				0				0				0				0	0
16:30				0				0				0				0	0
16:45				0				0				0				0	0
17:00				0				0				0				0	0
17:15				0				0				0				0	0
17:30				0				0				0				0	0
17:45				0				0				0				0	0
18:00				0				0				0				0	0
18:15				0				0				0				0	0
18:30				0				0				0				0	0
18:45				0				0				0				0	0
19:00				0				0				0				0	0
19:15				0				0				0				0	0
19:30				0				0				0				0	0
19:45				0				0				0				0	0
20:00				0				0				0				0	0
20:15				0				0				0				0	0
20:30				0				0				0				0	0
20:45				0				0				0				0	0
21:00				0				0				0				0	0
TOTAL	**775**	**5808**	**160**	**6743**	**309**	**6836**	**622**	**7767**	**0**	**0**	**0**	**0**	**127**	**84**	**103**	**314**	**14824**
AM Peak Vol	203	1394	34	1631	94	1659	115	1868	0	0	0	0	29	17	23	69	3568
PM Peak Vol	231	1625	31	1887	84	1852	165	2101	0	0	0	0	34	33	28	95	4083

PEDESTRIAN SCHOOL CHILDREN & U-TURN BREAKDOWN

Hour	MD 355			MD 355			Security Ln			Security Ln		
Ending	**S.C.**	**PED.**	**U.T.**	**S.C.**	**PED.**	**U.T.**	**S.C.**	**PED.**	**U.T.**	**S.C.**	**PED.**	**U.T.**
00:15												
00:30												
00:45												
01:00												
01:15												
01:30												
01:45												
02:00												
02:15												
02:30												
02:45												
03:00												
03:15												
03:30												
03:45												
04:00												
04:15												
04:30												
04:45												
05:00												
05:15												
05:30												
05:45												
06:00												
06:15												
06:30												
06:45												
07:00												
07:15												
07:30												
07:45												
08:00												
08:15												
08:30												
08:45												
09:00												
09:15												
09:30												
09:45												
10:00												
10:15												
10:30												
10:45												
11:00												
11:15												
11:30												
11:45												
12:00												
12:15												
12:30												
12:45												
13:00												
13:15												
13:30												
13:45												
14:00												
14:15												
14:30												
14:45												
15:00												
15:15												
15:30												
15:45												
16:00												
16:15												
16:30												
16:45												
17:00												
17:15												
17:30												
17:45												
18:00												
18:15												
18:30												
18:45												
19:00												
19:15												
19:30												
19:45												
20:00												
20:15												
20:30												
20:45												
21:00												
TOTAL	**0**	**0**	**0**	**0**	**0**	**0**	**0**	**0**	**0**	**0**	**0**	**0**
AM Peak Vol	0	0	0	0	0	0	0	0	0	0	0	0
PM Peak Vol	0	0	0	0	0	0	0	0	0	0	0	0

Turning Movement Summary:

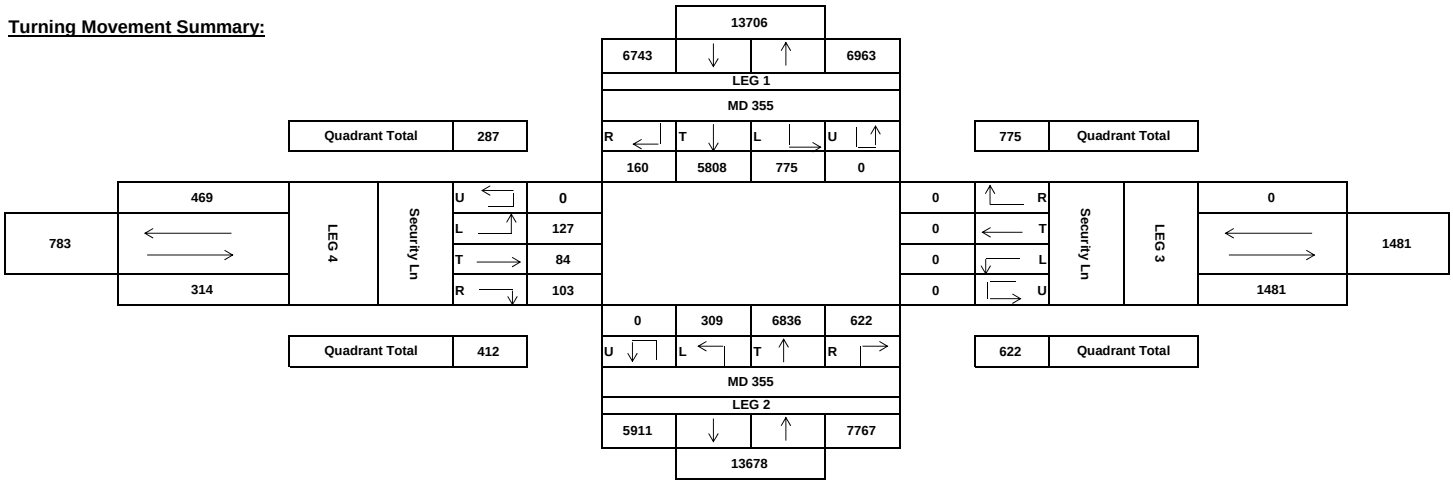

Comments:

AM Peak Hour :

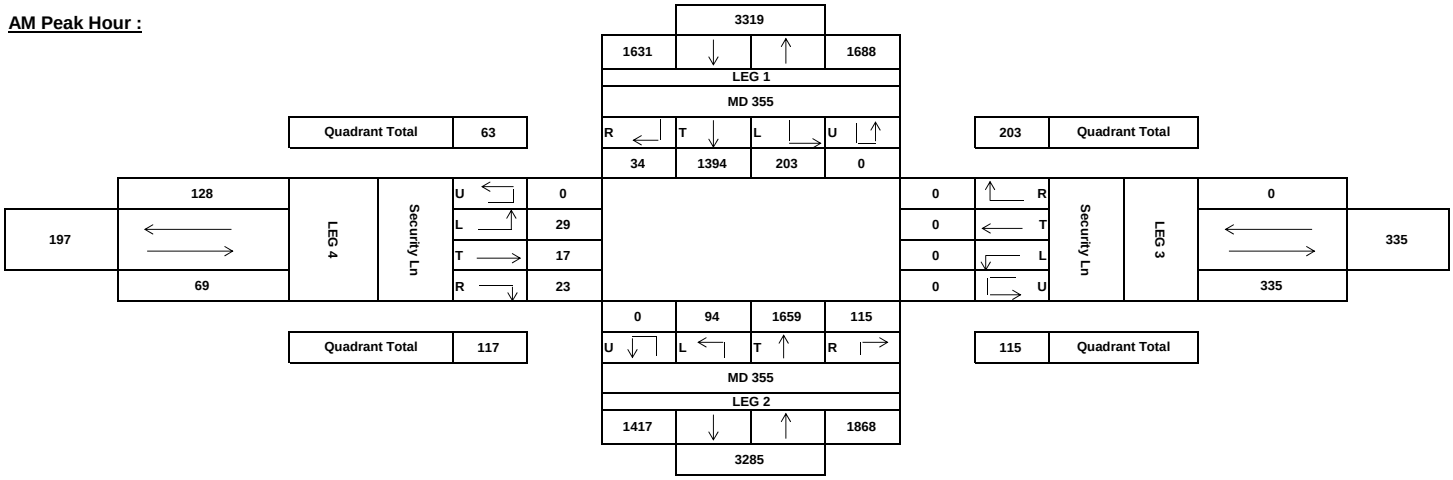

PM Peak Hour :

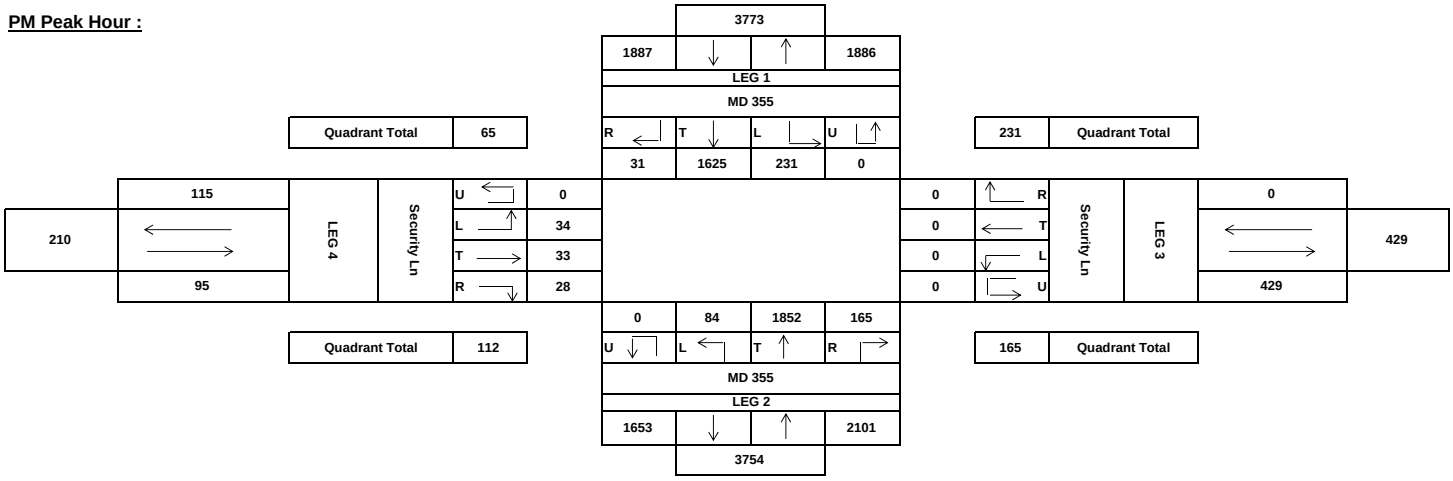

Maryland State Highway Administration
Highway Information Services Division
Turning Counts Study - Field Sheet

Request No.:
Job No.:

Location: MD 355 and Twinbrook
Date: 11/12/2011 Saturday
Recorder:
Interval (dd) : 15
(In Minutes)

County: Montgomery
Town: North Bethesda
Weather: Sunny

PEAK HOURS	AM PERIOD 6:00AM-12:00PM	Start	End	Volume	PM PERIOD 12:00PM-7:00PM	Start	End	Volume
		11:00	12:00	4510		12:45	13:45	4027

Street Name-->	MD 355				MD 355				Hoya St				Hoya St				
HOUR	From North				From South				From East				From West				GRAND
ENDING	L	T	R	TOT	L	T	R	TOT	L	T	R	TOT	L	T	R	TOT	TOTAL
00:15				0				0				0				0	0
00:30				0				0				0				0	0
00:45				0				0				0				0	0
01:00				0				0				0				0	0
01:15				0				0				0				0	0
01:30				0				0				0				0	0
01:45				0				0				0				0	0
02:00				0				0				0				0	0
02:15				0				0				0				0	0
02:30				0				0				0				0	0
02:45				0				0				0				0	0
03:00				0				0				0				0	0
03:15				0				0				0				0	0
03:30				0				0				0				0	0
03:45				0				0				0				0	0
04:00				0				0				0				0	0
04:15				0				0				0				0	0
04:30				0				0				0				0	0
04:45				0				0				0				0	0
05:00				0				0				0				0	0
05:15				0				0				0				0	0
05:30				0				0				0				0	0
05:45				0				0				0				0	0
06:00				0				0				0				0	0
06:15				0				0				0				0	0
06:30				0				0				0				0	0
06:45				0				0				0				0	0
07:00				0				0				0				0	0
07:15				0				0				0				0	0
07:30				0				0				0				0	0
07:45				0				0				0				0	0
08:00				0				0				0				0	0
08:15				0				0				0				0	0
08:30				0				0				0				0	0
08:45				0				0				0				0	0
09:00				0				0				0				0	0
09:15				0				0				0				0	0
09:30				0				0				0				0	0
09:45				0				0				0				0	0
10:00				0				0				0				0	0
10:15	34	322	24	380	11	270	26	307	0	70	32	102	0	57	21	78	867
10:30	35	316	21	372	20	346	24	390	0	57	33	90	0	42	20	62	914
10:45	42	366	17	425	17	351	19	387	0	43	35	78	0	63	22	85	975
11:00	33	411	21	465	29	342	8	379	0	55	43	98	0	71	20	91	1033
11:15	**53**	**393**	**22**	**468**	**14**	**400**	**9**	**423**	**0**	**61**	**40**	**101**	**0**	**71**	**18**	**89**	**1081**
11:30	**48**	**392**	**23**	**463**	**27**	**380**	**15**	**422**	**0**	**66**	**35**	**101**	**0**	**53**	**15**	**68**	**1054**
11:45	**47**	**422**	**25**	**494**	**14**	**411**	**22**	**447**	**0**	**58**	**33**	**91**	**0**	**77**	**32**	**109**	**1141**
12:00	**58**	**472**	**25**	**555**	**15**	**419**	**23**	**457**	**0**	**59**	**47**	**106**	**0**	**88**	**28**	**116**	**1234**
12:15	44	448	26	518	12	405	21	438	0	49	45	94	0	83	30	113	1163
12:30	44	415	18	477	22	368	20	410	0	63	46	109	0	83	26	109	1105
12:45	41	333	15	389	15	453	18	486	0	83	46	129	0	77	23	100	1104
13:00	**47**	**469**	**20**	**536**	**22**	**402**	**28**	**452**	**0**	**76**	**33**	**109**	**0**	**94**	**19**	**113**	**1210**
13:15	**43**	**458**	**16**	**517**	**27**	**415**	**31**	**473**	**0**	**78**	**37**	**115**	**0**	**97**	**21**	**118**	**1223**
13:30	**41**	**461**	**17**	**519**	**18**	**411**	**22**	**451**	**0**	**71**	**32**	**103**	**0**	**91**	**23**	**114**	**1187**
13:45	**37**	**453**	**15**	**505**	**12**	**391**	**23**	**426**	**0**	**64**	**35**	**99**	**0**	**82**	**18**	**100**	**1130**
14:00	35	445	21	501	16	384	19	419	0	66	28	94	0	71	14	85	1099
14:15	39	438	16	493	14	376	20	410	0	62	20	82	0	76	21	97	1082
14:30	33	430	13	476	11	342	14	367	0	58	22	80	0	64	16	80	1003
14:45	35	432	14	481	18	339	11	368	0	50	18	68	0	67	14	81	998
15:00	28	418	11	457	10	320	13	343	0	47	21	68	0	58	18	76	944
15:15				0				0				0				0	0
15:30				0				0				0				0	0
15:45				0				0				0				0	0
16:00				0				0				0				0	0
16:15				0				0				0				0	0
16:30				0				0				0				0	0
16:45				0				0				0				0	0
17:00				0				0				0				0	0
17:15				0				0				0				0	0
17:30				0				0				0				0	0
17:45				0				0				0				0	0
18:00				0				0				0				0	0
18:15				0				0				0				0	0
18:30				0				0				0				0	0
18:45				0				0				0				0	0
19:00				0				0				0				0	0
19:15				0				0				0				0	0
19:30				0				0				0				0	0
19:45				0				0				0				0	0
20:00				0				0				0				0	0
20:15				0				0				0				0	0
20:30				0				0				0				0	0
20:45				0				0				0				0	0
21:00				0				0				0				0	0
TOTAL	**817**	**8294**	**380**	**9491**	**344**	**7525**	**386**	**8255**	**0**	**1236**	**681**	**1917**	**0**	**1465**	**419**	**1884**	**21547**
AM Peak Vol	206	1679	95	1980	70	1610	69	1749	0	244	155	399	0	289	93	382	4510
PM Peak Vol	168	1841	68	2077	79	1619	104	1802	0	289	137	426	0	364	81	445	4750

Maryland State Highway Administration
Highway Information Services Division
Turning Counts Study - Field Sheet

Request No.:
Job No.:

Location: MD 355 and Twinbrook
Date: 11/12/2011 Saturday
Recorder:
Interval (dd) : 15
(In Minutes)

County: Montgomery
Town: North Bethesda
Weather: Sunny

PEAK HOURS	AM PERIOD 6:00AM-12:00PM	Start	End	Volume	PM PERIOD 12:00PM-7:00PM	Start	End	Volume
		11:00	12:00	4510		12:45	13:45	4027

PEDESTRIAN SCHOOL CHILDREN & U-TURN BREAKDOWN

Hour	MD 355			MD 355			Hoya St			Hoya St		
Ending	S.C.	PED.	U.T.	S.C.	PED.	U.T.	S.C.	PED.	U.T.	S.C.	PED.	U.T.
00:15												
00:30												
00:45												
01:00												
01:15												
01:30												
01:45												
02:00												
02:15												
02:30												
02:45												
03:00												
03:15												
03:30												
03:45												
04:00												
04:15												
04:30												
04:45												
05:00												
05:15												
05:30												
05:45												
06:00												
06:15												
06:30												
06:45												
07:00												
07:15												
07:30												
07:45												
08:00												
08:15												
08:30												
08:45												
09:00												
09:15												
09:30												
09:45												
10:00												
10:15			2			6						
10:30			5			3						
10:45			5			1						
11:00			3			4						
11:15			5			1						
11:30			2			3						
11:45			4			8						
12:00			2			16						
12:15			7			8						
12:30			1			11						
12:45			4			13						
13:00			2			9						
13:15			1			7						
13:30			0			10						
13:45			1			1						
14:00			3			3						
14:15			2			8						
14:30			1			1						
14:45			0			1						
15:00			1			2						
15:15												
15:30												
15:45												
16:00												
16:15												
16:30												
16:45												
17:00												
17:15												
17:30												
17:45												
18:00												
18:15												
18:30												
18:45												
19:00												
19:15												
19:30												
19:45												
20:00												
20:15												
20:30												
20:45												
21:00												
TOTAL	**0**	**0**	**51**	**0**	**0**	**116**	**0**	**0**	**0**	**0**	**0**	**0**
AM Peak Vol	0	0	13	0	0	28	0	0	0	0	0	0
PM Peak Vol	0	0	4	0	0	27	0	0	0	0	0	0

Maryland State Highway Administration
Highway Information Services Division
Turning Counts Study - Field Sheet

Request No.:
Job No.:

Location: MD 355 and Twinbrook
Date: 11/12/2011 Saturday
Recorder:
Interval (dd) : 15
(In Minutes)

County: Montgomery
Town: North Bethesda
Weather: Sunny

PEAK HOURS	AM PERIOD 6:00AM-12:00PM	Start	End	Volume	PM PERIOD 12:00PM-7:00PM	Start	End	Volume
		11:00	12:00	4510		12:45	13:45	4027

Turning Movement Summary:

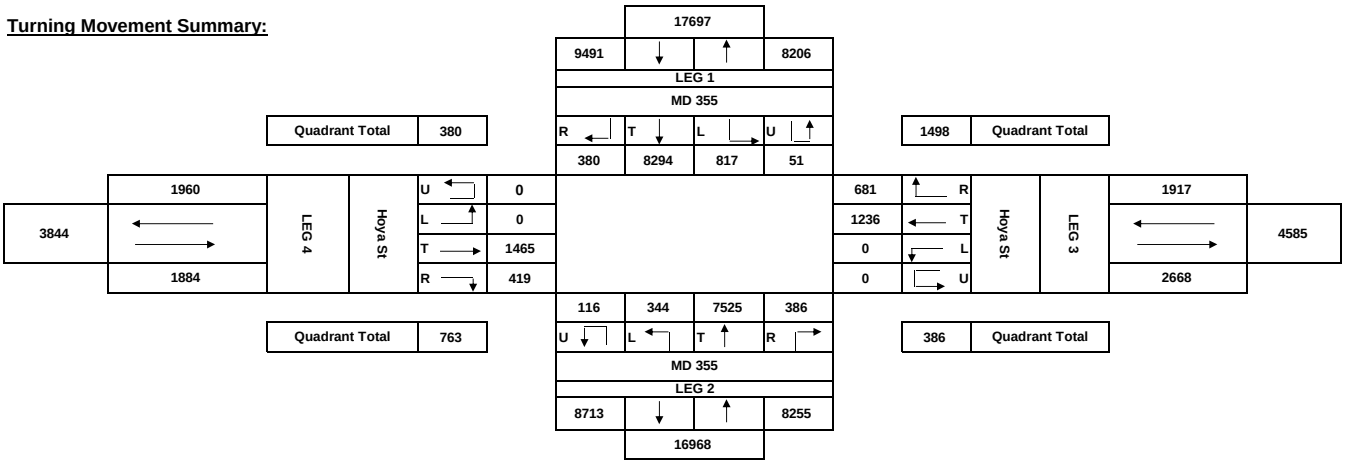

Comments:

AM Peak Hour :

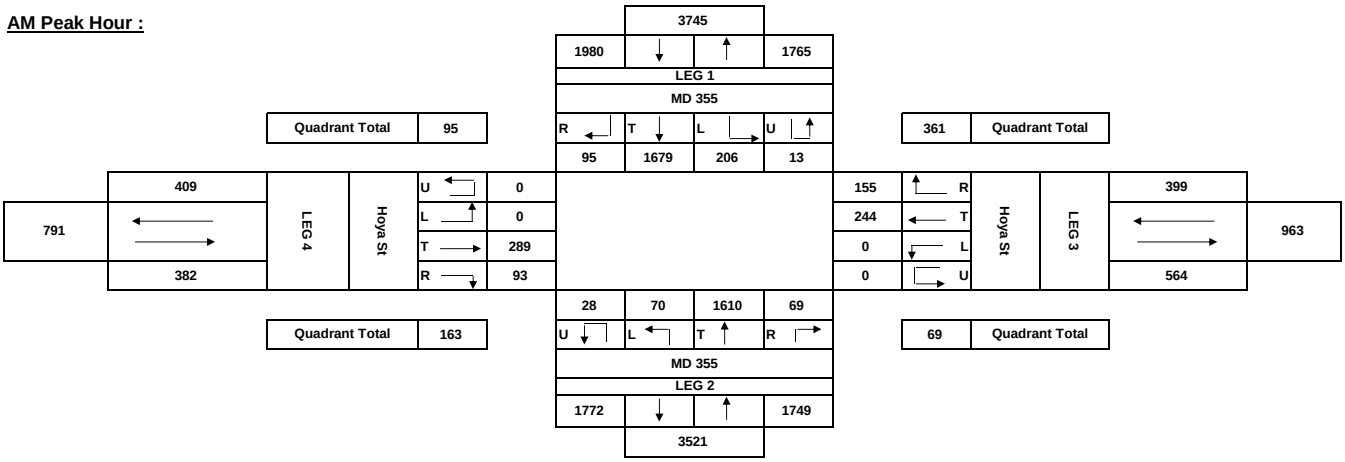

PM Peak Hour :

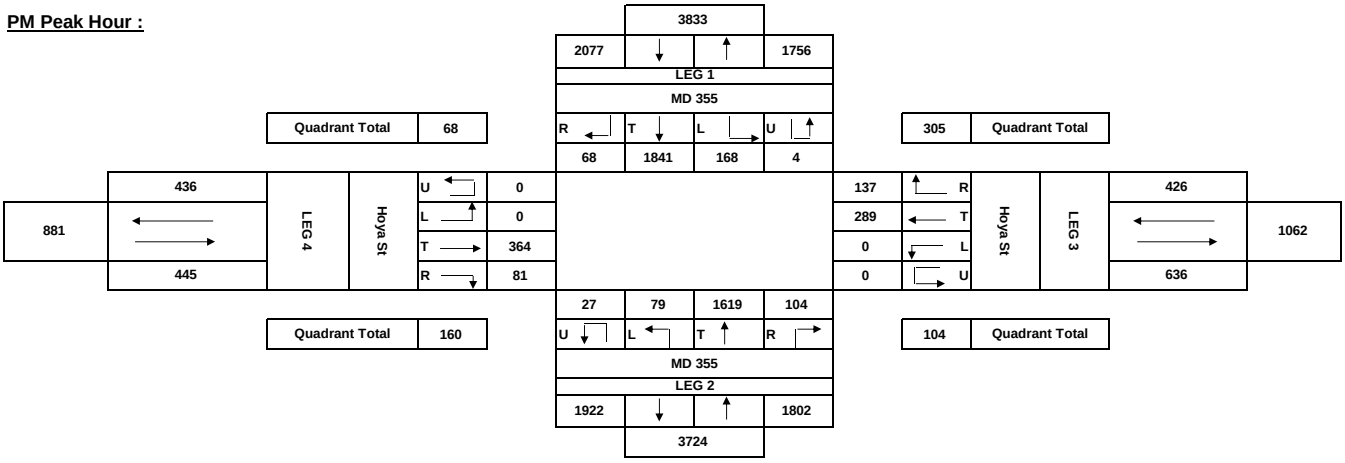

Maryland State Highway Administration
Highway Information Services Division
Turning Counts Study - Field Sheet

Request No.:
Job No.:

Location: MD 187 and Nicholson Ln/Tilden Ln
Date: 9/17/2011 Saturday
Recorder: AN/LS
Interval (dd) : 15
(In Minutes)

County: Montgomery
Town: North Bethesda
Weather: Cloudy

PEAK HOURS	AM PERIOD 6:00AM-12:00PM	Start	End	Volume	PM PERIOD 12:00PM-7:00PM	Start	End	Volume
		11:00	12:00	2985		12:00	13:00	0

Street Name-->	MD 187				MD 187				Nicholson Ln				Tilden Ln				
HOUR	From North				From South				From East				From West				GRAND
ENDING	L	T	R	TOT	L	T	R	TOT	L	T	R	TOT	L	T	R	TOT	TOTAL
00:15				0				0				0				0	0
00:30				0				0				0				0	0
00:45				0				0				0				0	0
01:00				0				0				0				0	0
01:15				0				0				0				0	0
01:30				0				0				0				0	0
01:45				0				0				0				0	0
02:00				0				0				0				0	0
02:15				0				0				0				0	0
02:30				0				0				0				0	0
02:45				0				0				0				0	0
03:00				0				0				0				0	0
03:15				0				0				0				0	0
03:30				0				0				0				0	0
03:45				0				0				0				0	0
04:00				0				0				0				0	0
04:15				0				0				0				0	0
04:30				0				0				0				0	0
04:45				0				0				0				0	0
05:00				0				0				0				0	0
05:15				0				0				0				0	0
05:30				0				0				0				0	0
05:45				0				0				0				0	0
06:00				0				0				0				0	0
06:15				0				0				0				0	0
06:30				0				0				0				0	0
06:45				0				0				0				0	0
07:00				0				0				0				0	0
07:15				0				0				0				0	0
07:30				0				0				0				0	0
07:45				0				0				0				0	0
08:00				0				0				0				0	0
08:15				0				0				0				0	0
08:30				0				0				0				0	0
08:45				0				0				0				0	0
09:00				0				0				0				0	0
09:15				0				0				0				0	0
09:30				0				0				0				0	0
09:45				0				0				0				0	0
10:00				0				0				0				0	0
10:15	11	142	8	161	35	155	71	261	69	19	2	90	23	21	20	64	576
10:30	6	175	6	187	25	232	81	338	79	9	0	88	21	21	25	67	680
10:45	10	158	8	176	19	205	78	302	66	12	5	83	20	18	18	56	617
11:00	10	187	21	218	38	225	91	354	79	18	9	106	14	15	18	47	725
11:15	**5**	**171**	**20**	**196**	**35**	**205**	**90**	**330**	**107**	**14**	**2**	**123**	**18**	**18**	**25**	**61**	**710**
11:30	**3**	**205**	**11**	**219**	**19**	**251**	**81**	**351**	**102**	**15**	**6**	**123**	**16**	**11**	**13**	**40**	**733**
11:45	**4**	**211**	**17**	**232**	**17**	**221**	**103**	**341**	**90**	**21**	**9**	**120**	**19**	**16**	**44**	**79**	**772**
12:00	**5**	**251**	**9**	**265**	**31**	**253**	**77**	**361**	**84**	**17**	**7**	**108**	**9**	**11**	**16**	**36**	**770**
12:15	**4**	**247**	**17**	**268**	**27**	**227**	**104**	**358**	**88**	**23**	**7**	**118**	**21**	**18**	**46**	**85**	**829**
12:30	**4**	**245**	**14**	**263**	**27**	**226**	**88**	**341**	**95**	**21**	**10**	**126**	**16**	**10**	**22**	**48**	**778**
12:45	**4**	**227**	**15**	**246**	**16**	**232**	**100**	**348**	**94**	**12**	**6**	**112**	**20**	**24**	**35**	**79**	**785**
13:00	**5**	**272**	**10**	**287**	**22**	**268**	**100**	**390**	**110**	**12**	**6**	**128**	**14**	**16**	**29**	**59**	**864**
13:15	10	236	11	257	25	201	94	320	109	17	5	131	14	9	28	51	759
13:30	6	268	13	287	26	251	104	381	109	15	5	129	11	15	20	46	843
13:45	4	246	9	259	13	244	92	349	100	14	6	120	11	22	18	51	779
14:00	7	227	14	248	11	244	114	369	108	8	6	122	21	21	25	67	806
14:15				0				0				0				0	0
14:30				0				0				0				0	0
14:45				0				0				0				0	0
15:00				0				0				0				0	0
15:15				0				0				0				0	0
15:30				0				0				0				0	0
15:45				0				0				0				0	0
16:00				0				0				0				0	0
16:15				0				0				0				0	0
16:30				0				0				0				0	0
16:45				0				0				0				0	0
17:00				0				0				0				0	0
17:15				0				0				0				0	0
17:30				0				0				0				0	0
17:45				0				0				0				0	0
18:00				0				0				0				0	0
18:15				0				0				0				0	0
18:30				0				0				0				0	0
18:45				0				0				0				0	0
19:00				0				0				0				0	0
19:15				0				0				0				0	0
19:30				0				0				0				0	0
19:45				0				0				0				0	0
20:00				0				0				0				0	0
20:15				0				0				0				0	0
20:30				0				0				0				0	0
20:45				0				0				0				0	0
21:00				0				0				0				0	0
TOTAL	**98**	**3468**	**203**	**3769**	**386**	**3640**	**1468**	**5494**	**1489**	**247**	**91**	**1827**	**268**	**266**	**402**	**936**	**12026**
AM Peak Vol	17	838	57	912	102	930	351	1383	383	67	24	474	62	56	98	216	2985
PM Peak Vol	17	991	56	1064	92	953	392	1437	387	68	29	484	71	68	132	271	3256

Maryland State Highway Administration
Highway Information Services Division
Turning Counts Study - Field Sheet

Request No.:
Job No.:

Location: MD 187 and Nicholson Ln/Tilden Ln
Date: 9/17/2011 Saturday
Recorder: AN/LS
Interval (dd) : 15
(In Minutes)

County: Montgomery
Town: North Bethesda
Weather: Cloudy

PEAK HOURS	AM PERIOD 6:00AM-12:00PM	Start	End	Volume	PM PERIOD 12:00PM-7:00PM	Start	End	Volume
		11:00	12:00	2985		12:00	13:00	0

PEDESTRIAN SCHOOL CHILDREN & U-TURN BREAKDOWN

Hour	MD 187			MD 187			Nicholson Ln			Tilden Ln		
Ending	S.C.	PED.	U.T.	S.C.	PED.	U.T.	S.C.	PED.	U.T.	S.C.	PED.	U.T.
00:15												
00:30												
00:45												
01:00												
01:15												
01:30												
01:45												
02:00												
02:15												
02:30												
02:45												
03:00												
03:15												
03:30												
03:45												
04:00												
04:15												
04:30												
04:45												
05:00												
05:15												
05:30												
05:45												
06:00												
06:15												
06:30												
06:45												
07:00												
07:15												
07:30												
07:45												
08:00												
08:15												
08:30												
08:45												
09:00												
09:15												
09:30												
09:45												
10:00												
10:15												
10:30												
10:45												
11:00												
11:15												
11:30												
11:45												
12:00												
12:15												
12:30												
12:45												
13:00												
13:15												
13:30												
13:45												
14:00												
14:15												
14:30												
14:45												
15:00												
15:15												
15:30												
15:45												
16:00												
16:15												
16:30												
16:45												
17:00												
17:15												
17:30												
17:45												
18:00												
18:15												
18:30												
18:45												
19:00												
19:15												
19:30												
19:45												
20:00												
20:15												
20:30												
20:45												
21:00												
TOTAL	**0**	**0**	**0**	**0**	**0**	**0**	**0**	**0**	**0**	**0**	**0**	**0**
AM Peak Vol	0	0	0	0	0	0	0	0	0	0	0	0
PM Peak Vol	0	0	0	0	0	0	0	0	0	0	0	0

Maryland State Highway Administration
Highway Information Services Division
Turning Counts Study - Field Sheet

Request No.:
Job No.:

Location: MD 187 and Nicholson Ln/Tilden Ln
Date: 9/17/2011 Saturday
Recorder: AN/LS
Interval (dd) : 15
(In Minutes)

County: Montgomery
Town: North Bethesda
Weather: Cloudy

PEAK HOURS	AM PERIOD 6:00AM-12:00PM	Start	End	Volume	PM PERIOD 12:00PM-7:00PM	Start	End	Volume
		11:00	12:00	2985		12:00	13:00	0

Turning Movement Summary:

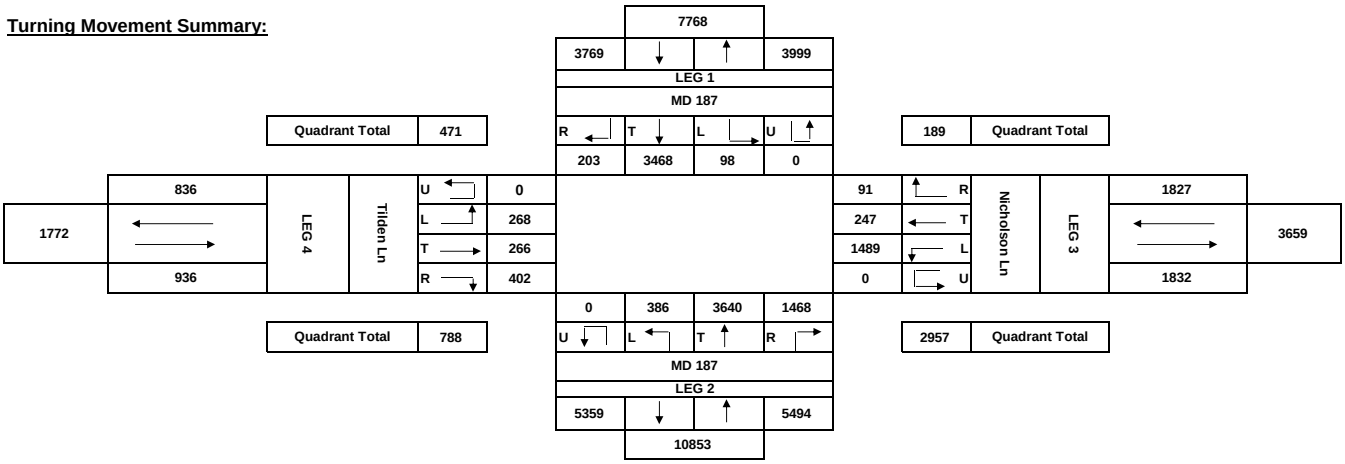

Comments:

AM Peak Hour :

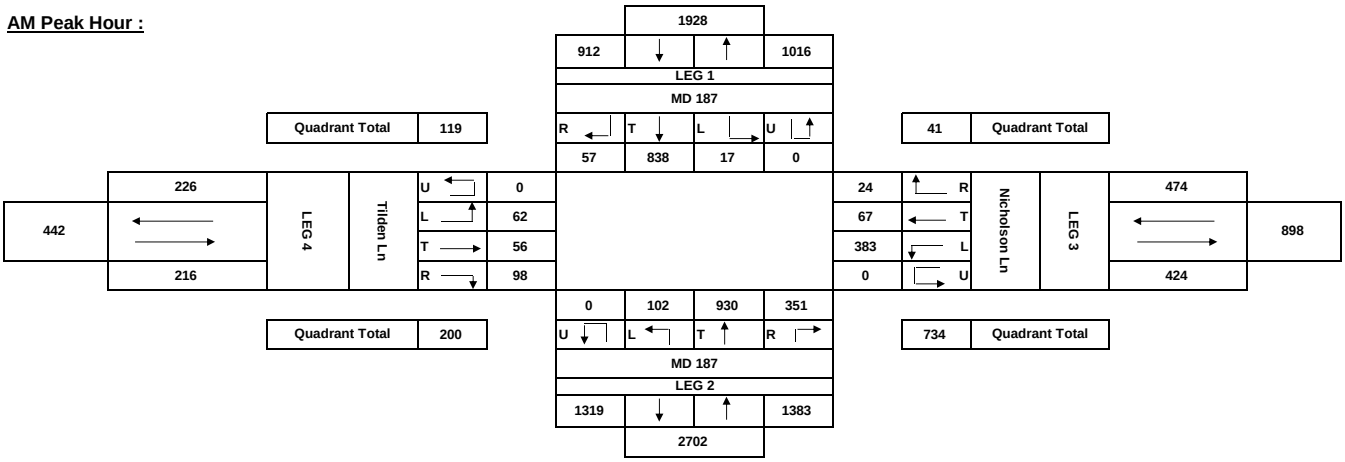

PM Peak Hour :

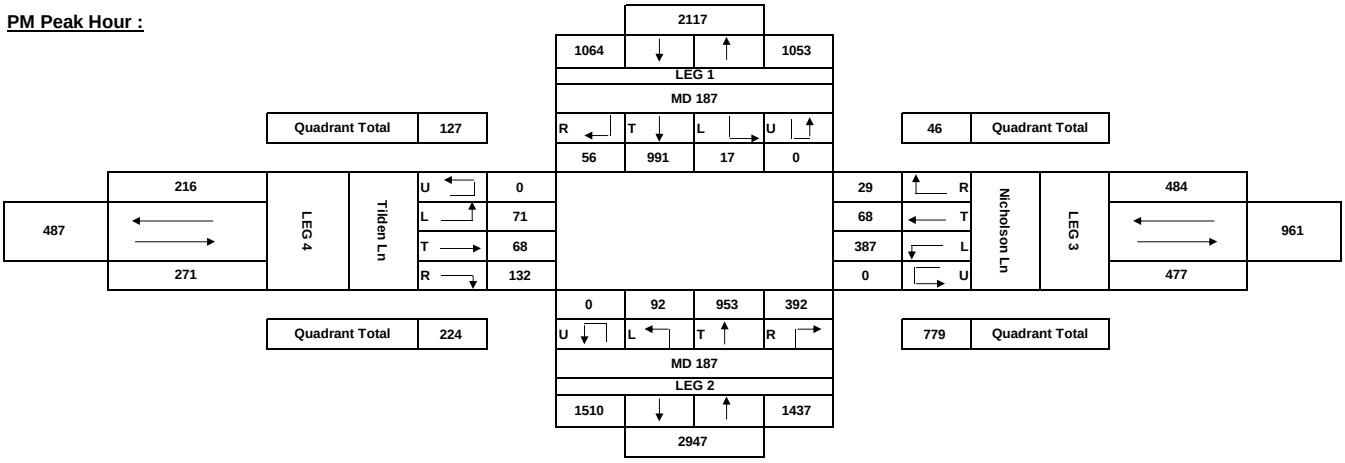

Maryland State Highway Administration
Highway Information Services Division
Turning Counts Study - Field Sheet

Request No.:
Job No.:

Location: MD 355 and Hoya St
Date: 10/1/2011 Saturday
Recorder: MO/AN
Interval (dd) : 15
(In Minutes)

County: Montgomery
Town: North Bethesda
Weather: Cloudy

PEAK HOURS	AM PERIOD 6:00AM-12:00PM	Start	End	Volume	PM PERIOD 12:00PM-7:00PM	Start	End	Volume
		11:00	12:00	4658		13:00	14:00	0

Street Name-->	MD 355				MD 355				Hoya St				Hoya St				
HOUR	From North				From South				From East				From West				GRAND
ENDING	L	T	R	TOT	L	T	R	TOT	L	T	R	TOT	L	T	R	TOT	TOTAL
00:15				0				0				0				0	0
00:30				0				0				0				0	0
00:45				0				0				0				0	0
01:00				0				0				0				0	0
01:15				0				0				0				0	0
01:30				0				0				0				0	0
01:45				0				0				0				0	0
02:00				0				0				0				0	0
02:15				0				0				0				0	0
02:30				0				0				0				0	0
02:45				0				0				0				0	0
03:00				0				0				0				0	0
03:15				0				0				0				0	0
03:30				0				0				0				0	0
03:45				0				0				0				0	0
04:00				0				0				0				0	0
04:15				0				0				0				0	0
04:30				0				0				0				0	0
04:45				0				0				0				0	0
05:00				0				0				0				0	0
05:15				0				0				0				0	0
05:30				0				0				0				0	0
05:45				0				0				0				0	0
06:00				0				0				0				0	0
06:15				0				0				0				0	0
06:30				0				0				0				0	0
06:45				0				0				0				0	0
07:00				0				0				0				0	0
07:15				0				0				0				0	0
07:30				0				0				0				0	0
07:45				0				0				0				0	0
08:00				0				0				0				0	0
08:15				0				0				0				0	0
08:30				0				0				0				0	0
08:45				0				0				0				0	0
09:00				0				0				0				0	0
09:15				0				0				0				0	0
09:30				0				0				0				0	0
09:45				0				0				0				0	0
10:00				0				0				0				0	0
10:15	0	334	67	401	0	511	0	511				0	0	0	28	28	940
10:30	0	285	53	338	0	533	0	533				0	0	0	20	20	891
10:45	0	362	82	444	0	486	0	486				0	0	0	36	36	966
11:00	0	387	70	457	0	528	0	528				0	0	0	51	51	1036
11:15	**0**	**427**	**86**	**513**	**0**	**556**	**0**	**556**				**0**	**0**	**0**	**34**	**34**	**1103**
11:30	**0**	**416**	**91**	**507**	**0**	**534**	**0**	**534**				**0**	**0**	**0**	**66**	**66**	**1107**
11:45	**0**	**452**	**83**	**535**	**0**	**609**	**0**	**609**				**0**	**0**	**0**	**45**	**45**	**1189**
12:00	**0**	**522**	**76**	**598**	**0**	**606**	**0**	**606**				**0**	**0**	**0**	**55**	**55**	**1259**
12:15	0	491	100	591	0	601	0	601				0	0	0	55	55	1247
12:30	0	417	101	518	0	607	0	607				0	0	0	69	69	1194
12:45	0	499	98	597	0	612	0	612				0	0	0	66	66	1275
13:00	0	507	103	610	0	615	0	615				0	0	0	61	61	1286
13:15	**0**	**384**	**97**	**481**	**0**	**615**	**0**	**615**				**0**	**0**	**0**	**61**	**61**	**1157**
13:30	**0**	**509**	**108**	**617**	**0**	**691**	**0**	**691**				**0**	**0**	**0**	**68**	**68**	**1376**
13:45	**0**	**486**	**105**	**591**	**0**	**676**	**0**	**676**				**0**	**0**	**0**	**85**	**85**	**1352**
14:00	**0**	**497**	**103**	**600**	**0**	**687**	**0**	**687**				**0**	**0**	**0**	**64**	**64**	**1351**
14:15				0				0				0				0	0
14:30				0				0				0				0	0
14:45				0				0				0				0	0
15:00				0				0				0				0	0
15:15				0				0				0				0	0
15:30				0				0				0				0	0
15:45				0				0				0				0	0
16:00				0				0				0				0	0
16:15				0				0				0				0	0
16:30				0				0				0				0	0
16:45				0				0				0				0	0
17:00				0				0				0				0	0
17:15				0				0				0				0	0
17:30				0				0				0				0	0
17:45				0				0				0				0	0
18:00				0				0				0				0	0
18:15				0				0				0				0	0
18:30				0				0				0				0	0
18:45				0				0				0				0	0
19:00				0				0				0				0	0
19:15				0				0				0				0	0
19:30				0				0				0				0	0
19:45				0				0				0				0	0
20:00				0				0				0				0	0
20:15				0				0				0				0	0
20:30				0				0				0				0	0
20:45				0				0				0				0	0
21:00				0				0				0				0	0
TOTAL	**0**	**6975**	**1423**	**8398**	**0**	**9467**	**0**	**9467**	**0**	**0**	**0**	**0**	**0**	**0**	**864**	**864**	**18729**
AM Peak Vol	0	1817	336	2153	0	2305	0	2305	0	0	0	0	0	0	200	200	4658
PM Peak Vol	0	1876	413	2289	0	2669	0	2669	0	0	0	0	0	0	278	278	5236

Maryland State Highway Administration
Highway Information Services Division
Turning Counts Study - Field Sheet

Request No.:
Job No.:

Location: MD 355 and Hoya St
Date: 10/1/2011 Saturday
Recorder: MO/AN
Interval (dd) : 15
(In Minutes)

County: Montgomery
Town: North Bethesda
Weather: Cloudy

PEAK HOURS	AM PERIOD 6:00AM-12:00PM	Start	End	Volume	PM PERIOD 12:00PM-7:00PM	Start	End	Volume
		11:00	12:00	4658		13:00	14:00	0

PEDESTRIAN SCHOOL CHILDREN & U-TURN BREAKDOWN

Hour	MD 355			MD 355			Hoya St			Hoya St		
Ending	S.C.	PED.	U.T.	S.C.	PED.	U.T.	S.C.	PED.	U.T.	S.C.	PED.	U.T.
00:15												
00:30												
00:45												
01:00												
01:15												
01:30												
01:45												
02:00												
02:15												
02:30												
02:45												
03:00												
03:15												
03:30												
03:45												
04:00												
04:15												
04:30												
04:45												
05:00												
05:15												
05:30												
05:45												
06:00												
06:15												
06:30												
06:45												
07:00												
07:15												
07:30												
07:45												
08:00												
08:15												
08:30												
08:45												
09:00												
09:15												
09:30												
09:45												
10:00												
10:15												
10:30												
10:45												
11:00												
11:15												
11:30												
11:45												
12:00												
12:15												
12:30												
12:45												
13:00												
13:15												
13:30												
13:45												
14:00												
14:15												
14:30												
14:45												
15:00												
15:15												
15:30												
15:45												
16:00												
16:15												
16:30												
16:45												
17:00												
17:15												
17:30												
17:45												
18:00												
18:15												
18:30												
18:45												
19:00												
19:15												
19:30												
19:45												
20:00												
20:15												
20:30												
20:45												
21:00												
TOTAL	**0**	**0**	**0**	**0**	**0**	**0**	**0**	**0**	**0**	**0**	**0**	**0**
AM Peak Vol	0	0	0	0	0	0	0	0	0	0	0	0
PM Peak Vol	0	0	0	0	0	0	0	0	0	0	0	0

Maryland State Highway Administration
Highway Information Services Division
Turning Counts Study - Field Sheet

Request No.:
Job No.:

Location: MD 355 and Hoya St
Date: 10/1/2011 Saturday
Recorder: MO/AN
Interval (dd) : 15
(In Minutes)

County: Montgomery
Town: North Bethesda
Weather: Cloudy

PEAK HOURS	AM PERIOD 6:00AM-12:00PM	Start	End	Volume	PM PERIOD 12:00PM-7:00PM	Start	End	Volume
		11:00	12:00	4658		13:00	14:00	0

Turning Movement Summary:

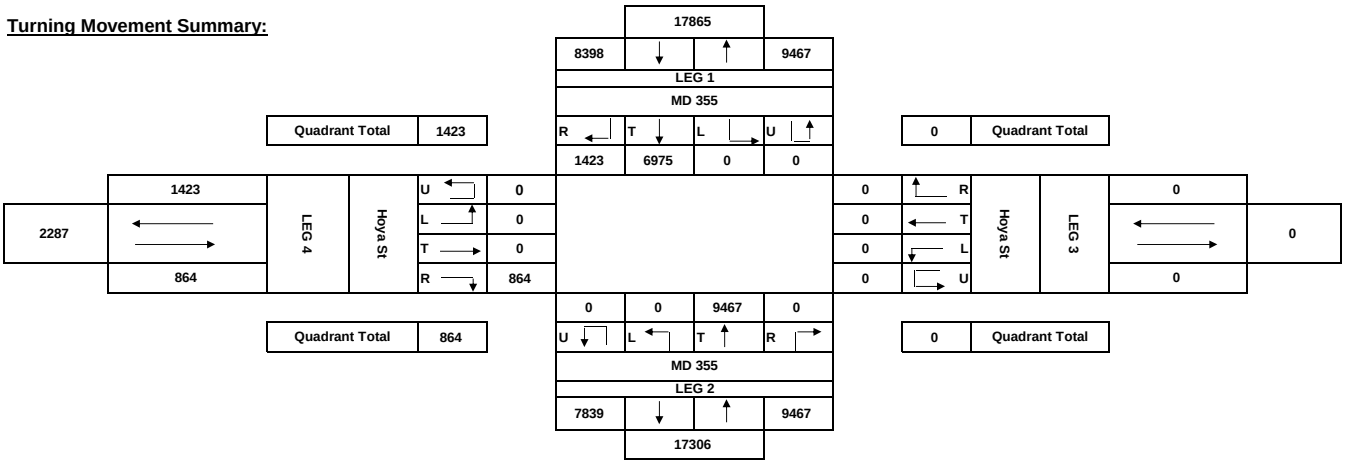

Comments:

AM Peak Hour :

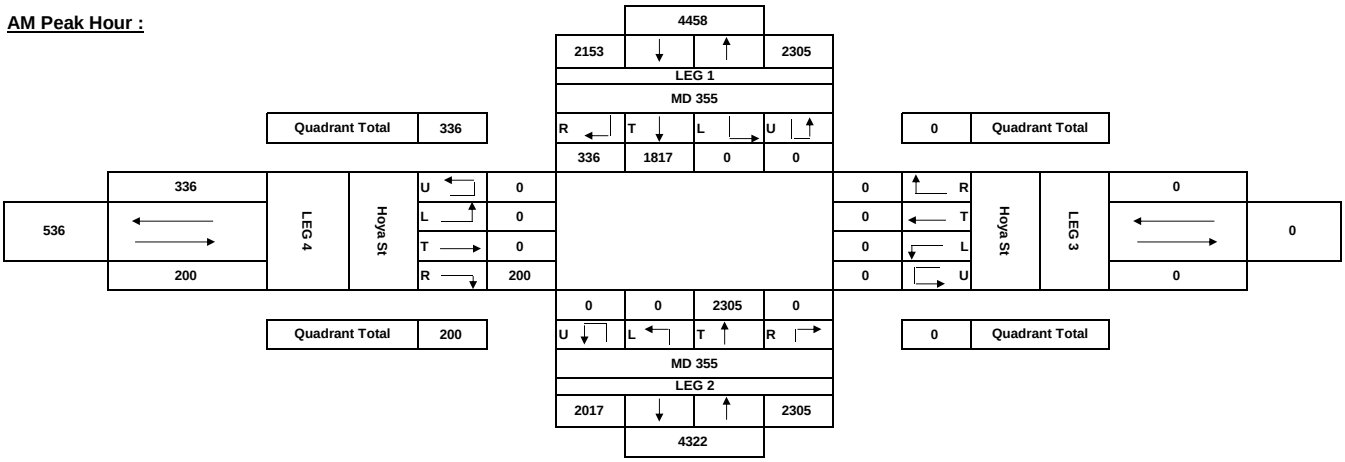

PM Peak Hour :

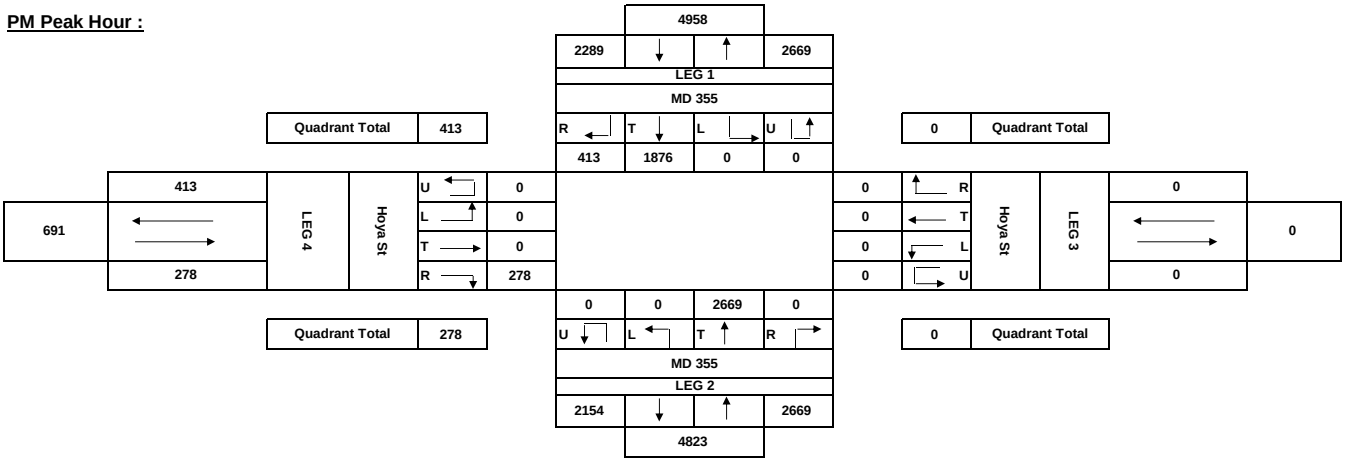

Maryland State Highway Administration
Highway Information Services Division
Turning Counts Study - Field Sheet

Request No.:
Job No.:

Location: MD 355 and Hubbard Dr
Date: 10/1/2011 Saturday
Recorder: LS/NT
Interval (dd) : 15
(In Minutes)

County: Montgomery
Town: North Bethesda
Weather: Cloudy

PEAK HOURS	AM PERIOD 6:00AM-12:00PM	Start	End	Volume	PM PERIOD 12:00PM-7:00PM	Start	End	Volume
		11:00	12:00	4893		12:45	13:45	0

Street Name-->	MD 355				MD 355				Hubbard Dr				Hubbard Dr				
HOUR	From North				From South				From East				From West				GRAND
ENDING	L	T	R	TOT	L	T	R	TOT	L	T	R	TOT	L	T	R	TOT	TOTAL
00:15				0				0				0				0	0
00:30				0				0				0				0	0
00:45				0				0				0				0	0
01:00				0				0				0				0	0
01:15				0				0				0				0	0
01:30				0				0				0				0	0
01:45				0				0				0				0	0
02:00				0				0				0				0	0
02:15				0				0				0				0	0
02:30				0				0				0				0	0
02:45				0				0				0				0	0
03:00				0				0				0				0	0
03:15				0				0				0				0	0
03:30				0				0				0				0	0
03:45				0				0				0				0	0
04:00				0				0				0				0	0
04:15				0				0				0				0	0
04:30				0				0				0				0	0
04:45				0				0				0				0	0
05:00				0				0				0				0	0
05:15				0				0				0				0	0
05:30				0				0				0				0	0
05:45				0				0				0				0	0
06:00				0				0				0				0	0
06:15				0				0				0				0	0
06:30				0				0				0				0	0
06:45				0				0				0				0	0
07:00				0				0				0				0	0
07:15				0				0				0				0	0
07:30				0				0				0				0	0
07:45				0				0				0				0	0
08:00				0				0				0				0	0
08:15				0				0				0				0	0
08:30				0				0				0				0	0
08:45				0				0				0				0	0
09:00				0				0				0				0	0
09:15				0				0				0				0	0
09:30				0				0				0				0	0
09:45				0				0				0				0	0
10:00				0				0				0				0	0
10:15	21	348	8	377	8	350	51	409	33	4	20	57	10	3	6	19	862
10:30	37	368	7	412	5	386	65	456	36	7	44	87	8	6	10	24	979
10:45	38	443	5	486	12	420	70	502	32	6	29	67	8	2	6	16	1071
11:00	38	432	4	474	10	449	64	523	52	3	44	99	7	7	4	18	1114
11:15	**37**	**437**	**4**	**478**	**12**	**437**	**78**	**527**	**53**	**5**	**36**	**94**	**9**	**3**	**10**	**22**	**1121**
11:30	**35**	**429**	**60**	**524**	**26**	**471**	**85**	**582**	**53**	**3**	**47**	**103**	**12**	**6**	**14**	**32**	**1241**
11:45	**33**	**464**	**10**	**507**	**14**	**488**	**67**	**569**	**62**	**6**	**51**	**119**	**9**	**4**	**14**	**27**	**1222**
12:00	**43**	**526**	**9**	**578**	**10**	**514**	**74**	**598**	**55**	**7**	**47**	**109**	**12**	**2**	**10**	**24**	**1309**
12:15	34	505	6	545	17	496	82	595	62	2	48	112	10	5	12	27	1279
12:30	40	454	4	498	22	513	69	604	51	4	50	105	7	1	9	17	1224
12:45	31	418	5	454	23	497	64	584	60	2	43	105	12	0	10	22	1165
13:00	**31**	**564**	**3**	**598**	**1**	**516**	**92**	**609**	**53**	**2**	**47**	**102**	**12**	**1**	**8**	**21**	**1330**
13:15	**34**	**509**	**7**	**550**	**19**	**491**	**76**	**586**	**62**	**3**	**41**	**106**	**7**	**4**	**10**	**21**	**1263**
13:30	**38**	**626**	**6**	**670**	**14**	**489**	**82**	**585**	**69**	**2**	**46**	**117**	**7**	**4**	**8**	**19**	**1391**
13:45	**43**	**535**	**3**	**581**	**18**	**508**	**77**	**603**	**76**	**1**	**36**	**113**	**7**	**0**	**8**	**15**	**1312**
14:00	45	530	4	579	18	504	81	603	53	1	54	108	6	1	7	14	1304
14:15				0				0				0				0	0
14:30				0				0				0				0	0
14:45				0				0				0				0	0
15:00				0				0				0				0	0
15:15				0				0				0				0	0
15:30				0				0				0				0	0
15:45				0				0				0				0	0
16:00				0				0				0				0	0
16:15				0				0				0				0	0
16:30				0				0				0				0	0
16:45				0				0				0				0	0
17:00				0				0				0				0	0
17:15				0				0				0				0	0
17:30				0				0				0				0	0
17:45				0				0				0				0	0
18:00				0				0				0				0	0
18:15				0				0				0				0	0
18:30				0				0				0				0	0
18:45				0				0				0				0	0
19:00				0				0				0				0	0
19:15				0				0				0				0	0
19:30				0				0				0				0	0
19:45				0				0				0				0	0
20:00				0				0				0				0	0
20:15				0				0				0				0	0
20:30				0				0				0				0	0
20:45				0				0				0				0	0
21:00				0				0				0				0	0
TOTAL	**578**	**7588**	**145**	**8311**	**229**	**7529**	**1177**	**8935**	**862**	**58**	**683**	**1603**	**143**	**49**	**146**	**338**	**19187**
AM Peak Vol	148	1856	83	2087	62	1910	304	2276	223	21	181	425	42	15	48	105	4893
PM Peak Vol	146	2234	19	2399	52	2004	327	2383	260	8	170	438	33	9	34	76	5296

Maryland State Highway Administration
Highway Information Services Division
Turning Counts Study - Field Sheet

Request No.:
Job No.:

Location: MD 355 and Hubbard Dr
Date: 10/1/2011 Saturday
Recorder: LS/NT
Interval (dd) : 15
(In Minutes)

County: Montgomery
Town: North Bethesda
Weather: Cloudy

PEAK HOURS	AM PERIOD 6:00AM-12:00PM	Start	End	Volume	PM PERIOD 12:00PM-7:00PM	Start	End	Volume
		11:00	12:00	4893		12:45	13:45	0

PEDESTRIAN SCHOOL CHILDREN & U-TURN BREAKDOWN

Hour	MD 355			MD 355			Hubbard Dr			Hubbard Dr		
Ending	S.C.	PED.	U.T.	S.C.	PED.	U.T.	S.C.	PED.	U.T.	S.C.	PED.	U.T.
00:15												
00:30												
00:45												
01:00												
01:15												
01:30												
01:45												
02:00												
02:15												
02:30												
02:45												
03:00												
03:15												
03:30												
03:45												
04:00												
04:15												
04:30												
04:45												
05:00												
05:15												
05:30												
05:45												
06:00												
06:15												
06:30												
06:45												
07:00												
07:15												
07:30												
07:45												
08:00												
08:15												
08:30												
08:45												
09:00												
09:15												
09:30												
09:45												
10:00												
10:15			1									
10:30			5									
10:45			1									
11:00			0									
11:15			0									
11:30			3									
11:45			3									
12:00			3									
12:15			0									
12:30			0									
12:45			5									
13:00			3									
13:15			2									
13:30			0									
13:45			4									
14:00			1									
14:15												
14:30												
14:45												
15:00												
15:15												
15:30												
15:45												
16:00												
16:15												
16:30												
16:45												
17:00												
17:15												
17:30												
17:45												
18:00												
18:15												
18:30												
18:45												
19:00												
19:15												
19:30												
19:45												
20:00												
20:15												
20:30												
20:45												
21:00												
TOTAL	**0**	**0**	**31**	**0**	**0**	**0**	**0**	**0**	**0**	**0**	**0**	**0**
AM Peak Vol	0	0	9	0	0	0	0	0	0	0	0	0
PM Peak Vol	0	0	9	0	0	0	0	0	0	0	0	0

Maryland State Highway Administration
Highway Information Services Division
Turning Counts Study - Field Sheet

Request No.:
Job No.:

Location: MD 355 and Hubbard Dr
Date: 10/1/2011 Saturday
Recorder: LS/NT
Interval (dd) : 15
(In Minutes)

County: Montgomery
Town: North Bethesda
Weather: Cloudy

PEAK HOURS	AM PERIOD 6:00AM-12:00PM	Start	End	Volume	PM PERIOD 12:00PM-7:00PM	Start	End	Volume
		11:00	12:00	4893		12:45	13:45	0

Turning Movement Summary:

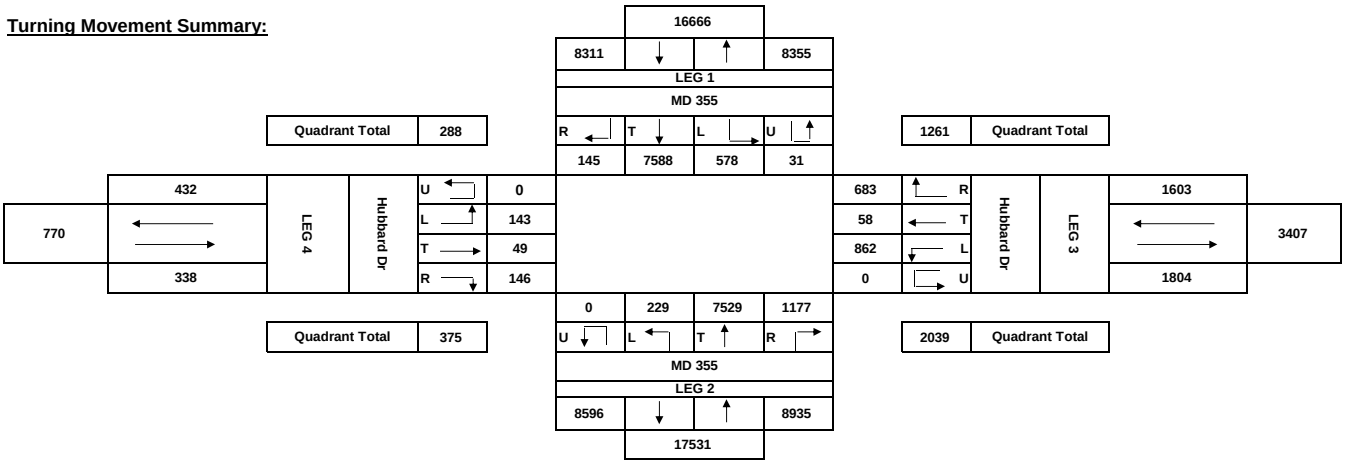

Comments:

AM Peak Hour :

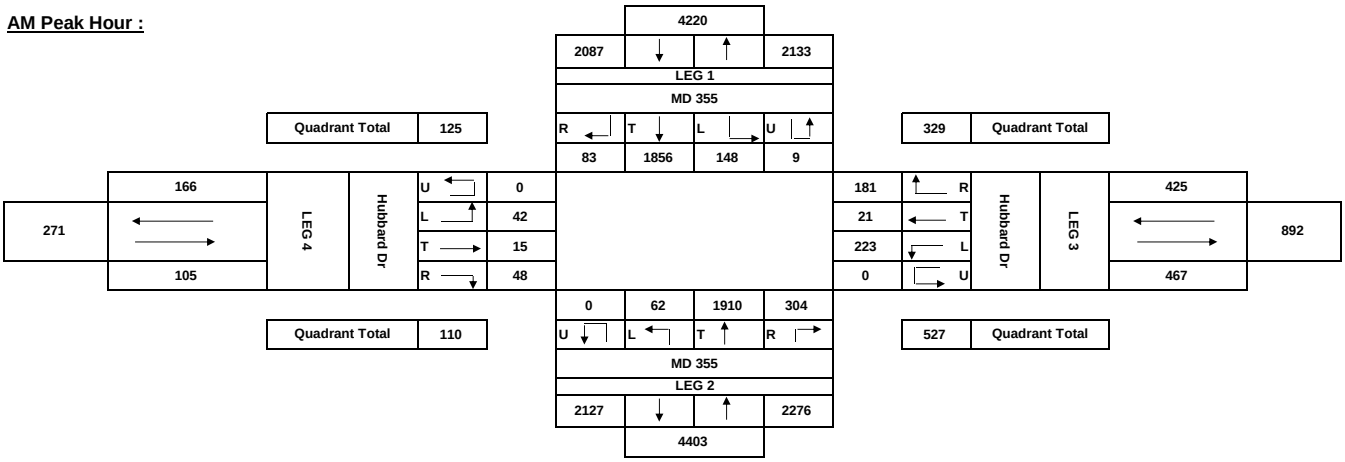

PM Peak Hour :

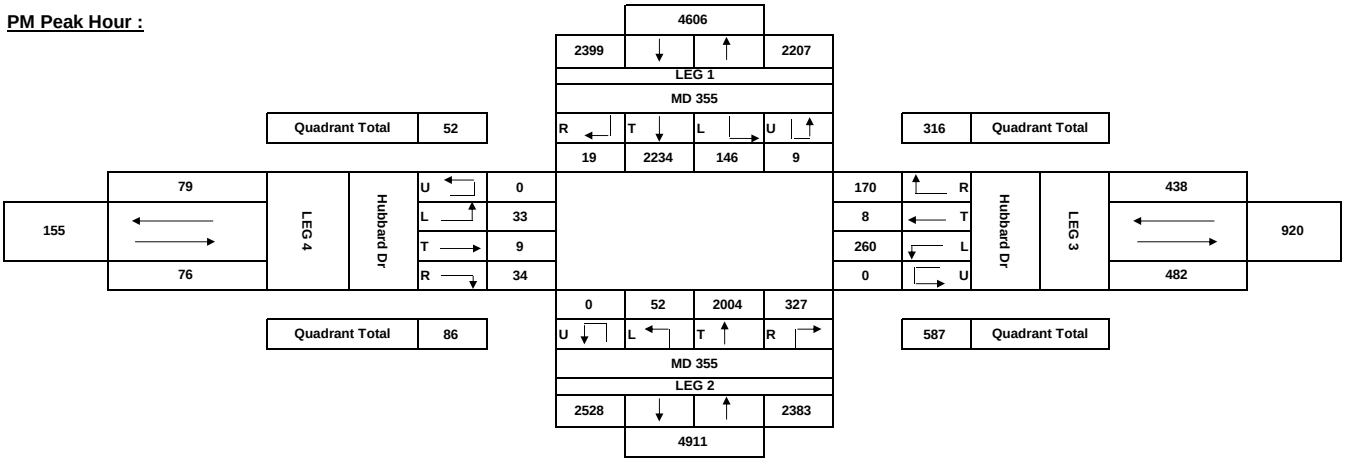

Maryland State Highway Administration
Highway Information Services Division
Turning Counts Study - Field Sheet

Request No.:
Job No.:

Location: MD 355 and Marinelli Rd
Date: 9/24/2011 Saturday
Recorder: AM/BH
Interval (dd) : 15
(In Minutes)

County: Montgomery
Town: North Bethesda
Weather: Cloudy

PEAK HOURS	AM PERIOD 6:00AM-12:00PM	Start	End	Volume	PM PERIOD 12:00PM-7:00PM	Start	End	Volume
		11:00	12:00	3520		13:00	14:00	0

Street Name-->	MD 355				MD 355				Marinelli Rd				Marinelli Rd				
HOUR	From North				From South				From East				From West				GRAND
ENDING	L	T	R	TOT	L	T	R	TOT	L	T	R	TOT	L	T	R	TOT	TOTAL
00:15				0				0				0				0	0
00:30				0				0				0				0	0
00:45				0				0				0				0	0
01:00				0				0				0				0	0
01:15				0				0				0				0	0
01:30				0				0				0				0	0
01:45				0				0				0				0	0
02:00				0				0				0				0	0
02:15				0				0				0				0	0
02:30				0				0				0				0	0
02:45				0				0				0				0	0
03:00				0				0				0				0	0
03:15				0				0				0				0	0
03:30				0				0				0				0	0
03:45				0				0				0				0	0
04:00				0				0				0				0	0
04:15				0				0				0				0	0
04:30				0				0				0				0	0
04:45				0				0				0				0	0
05:00				0				0				0				0	0
05:15				0				0				0				0	0
05:30				0				0				0				0	0
05:45				0				0				0				0	0
06:00				0				0				0				0	0
06:15				0				0				0				0	0
06:30				0				0				0				0	0
06:45				0				0				0				0	0
07:00				0				0				0				0	0
07:15				0				0				0				0	0
07:30				0				0				0				0	0
07:45				0				0				0				0	0
08:00				0				0				0				0	0
08:15				0				0				0				0	0
08:30				0				0				0				0	0
08:45				0				0				0				0	0
09:00				0				0				0				0	0
09:15				0				0				0				0	0
09:30				0				0				0				0	0
09:45				0				0				0				0	0
10:00				0				0				0				0	0
10:15	5	269	15	289	9	308	7	324	10	11	4	25	14	12	14	40	678
10:30	8	309	7	324	8	356	8	372	7	5	6	18	25	10	9	44	758
10:45	9	305	16	330	6	359	7	372	7	5	7	19	21	10	18	49	770
11:00	3	366	15	384	13	385	5	403	13	7	8	28	23	14	13	50	865
11:15	**11**	**345**	**17**	**373**	**13**	**400**	**12**	**425**	**7**	**10**	**12**	**29**	**21**	**11**	**10**	**42**	**869**
11:30	**12**	**343**	**16**	**371**	**13**	**391**	**8**	**412**	**9**	**6**	**8**	**23**	**29**	**10**	**16**	**55**	**861**
11:45	**5**	**383**	**16**	**404**	**20**	**347**	**8**	**375**	**7**	**11**	**9**	**27**	**26**	**8**	**22**	**56**	**862**
12:00	**13**	**406**	**26**	**445**	**21**	**373**	**11**	**405**	**5**	**6**	**9**	**20**	**27**	**16**	**15**	**58**	**928**
12:15	10	408	24	442	10	382	5	397	16	8	8	32	25	10	18	53	924
12:30	12	417	20	449	10	434	9	453	15	10	5	30	24	7	12	43	975
12:45	15	469	16	500	9	400	11	420	11	8	12	31	18	9	26	53	1004
13:00	12	389	23	424	15	425	6	446	9	6	11	26	16	6	18	40	936
13:15	**9**	**412**	**24**	**445**	**5**	**445**	**9**	**459**	**12**	**9**	**12**	**33**	**27**	**10**	**18**	**55**	**992**
13:30	**12**	**451**	**15**	**478**	**10**	**417**	**13**	**440**	**11**	**8**	**4**	**23**	**18**	**6**	**16**	**40**	**981**
13:45	**15**	**419**	**11**	**445**	**14**	**447**	**6**	**467**	**13**	**4**	**11**	**28**	**28**	**10**	**15**	**53**	**993**
14:00	**10**	**429**	**20**	**459**	**17**	**463**	**10**	**490**	**11**	**10**	**13**	**34**	**21**	**18**	**14**	**53**	**1036**
14:15				0				0				0				0	0
14:30				0				0				0				0	0
14:45				0				0				0				0	0
15:00				0				0				0				0	0
15:15				0				0				0				0	0
15:30				0				0				0				0	0
15:45				0				0				0				0	0
16:00				0				0				0				0	0
16:15				0				0				0				0	0
16:30				0				0				0				0	0
16:45				0				0				0				0	0
17:00				0				0				0				0	0
17:15				0				0				0				0	0
17:30				0				0				0				0	0
17:45				0				0				0				0	0
18:00				0				0				0				0	0
18:15				0				0				0				0	0
18:30				0				0				0				0	0
18:45				0				0				0				0	0
19:00				0				0				0				0	0
19:15				0				0				0				0	0
19:30				0				0				0				0	0
19:45				0				0				0				0	0
20:00				0				0				0				0	0
20:15				0				0				0				0	0
20:30				0				0				0				0	0
20:45				0				0				0				0	0
21:00				0				0				0				0	0
TOTAL	**161**	**6120**	**281**	**6562**	**193**	**6332**	**135**	**6660**	**163**	**124**	**139**	**426**	**363**	**167**	**254**	**784**	**14432**
AM Peak Vol	41	1477	75	1593	67	1511	39	1617	28	33	38	99	103	45	63	211	3520
PM Peak Vol	46	1711	70	1827	46	1772	38	1856	47	31	40	118	94	44	63	201	4002

Maryland State Highway Administration
Highway Information Services Division
Turning Counts Study - Field Sheet

Request No.:
Job No.:

Location: MD 355 and Marinelli Rd
Date: 9/24/2011 Saturday
Recorder: AM/BH
Interval (dd) : 15
(In Minutes)

County: Montgomery
Town: North Bethesda
Weather: Cloudy

PEAK HOURS	AM PERIOD 6:00AM-12:00PM	Start	End	Volume	PM PERIOD 12:00PM-7:00PM	Start	End	Volume
		11:00	12:00	3520		13:00	14:00	0

PEDESTRIAN SCHOOL CHILDREN & U-TURN BREAKDOWN

Hour	MD 355			MD 355			Marinelli Rd			Marinelli Rd		
Ending	S.C.	PED.	U.T.	S.C.	PED.	U.T.	S.C.	PED.	U.T.	S.C.	PED.	U.T.
00:15												
00:30												
00:45												
01:00												
01:15												
01:30												
01:45												
02:00												
02:15												
02:30												
02:45												
03:00												
03:15												
03:30												
03:45												
04:00												
04:15												
04:30												
04:45												
05:00												
05:15												
05:30												
05:45												
06:00												
06:15												
06:30												
06:45												
07:00												
07:15												
07:30												
07:45												
08:00												
08:15												
08:30												
08:45												
09:00												
09:15												
09:30												
09:45												
10:00												
10:15			0			3						
10:30			5			5						
10:45			2			2						
11:00			2			3						
11:15			1			2						
11:30			4			5						
11:45			3			1						
12:00			4			2						
12:15			2			1						
12:30			4			5						
12:45			7			5						
13:00			4			2						
13:15			1			3						
13:30			4			8						
13:45			10			1						
14:00			8			3						
14:15												
14:30												
14:45												
15:00												
15:15												
15:30												
15:45												
16:00												
16:15												
16:30												
16:45												
17:00												
17:15												
17:30												
17:45												
18:00												
18:15												
18:30												
18:45												
19:00												
19:15												
19:30												
19:45												
20:00												
20:15												
20:30												
20:45												
21:00												
TOTAL	**0**	**0**	**61**	**0**	**0**	**51**	**0**	**0**	**0**	**0**	**0**	**0**
AM Peak Vol	0	0	12	0	0	10	0	0	0	0	0	0
PM Peak Vol	0	0	23	0	0	15	0	0	0	0	0	0

Maryland State Highway Administration
Highway Information Services Division
Turning Counts Study - Field Sheet

Request No.:
Job No.:

Location: MD 355 and Marinelli Rd
Date: 9/24/2011 Saturday
Recorder: AM/BH
Interval (dd) : 15
(In Minutes)

County: Montgomery
Town: North Bethesda
Weather: Cloudy

PEAK HOURS	AM PERIOD 6:00AM-12:00PM	Start	End	Volume	PM PERIOD 12:00PM-7:00PM	Start	End	Volume
		11:00	12:00	3520		13:00	14:00	0

Turning Movement Summary:

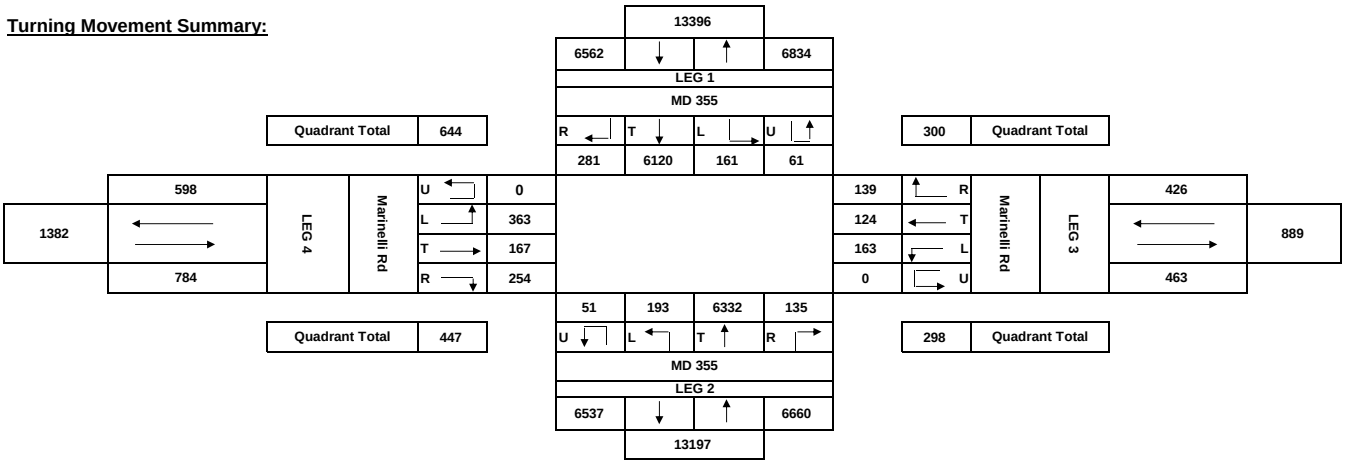

Comments:

AM Peak Hour :

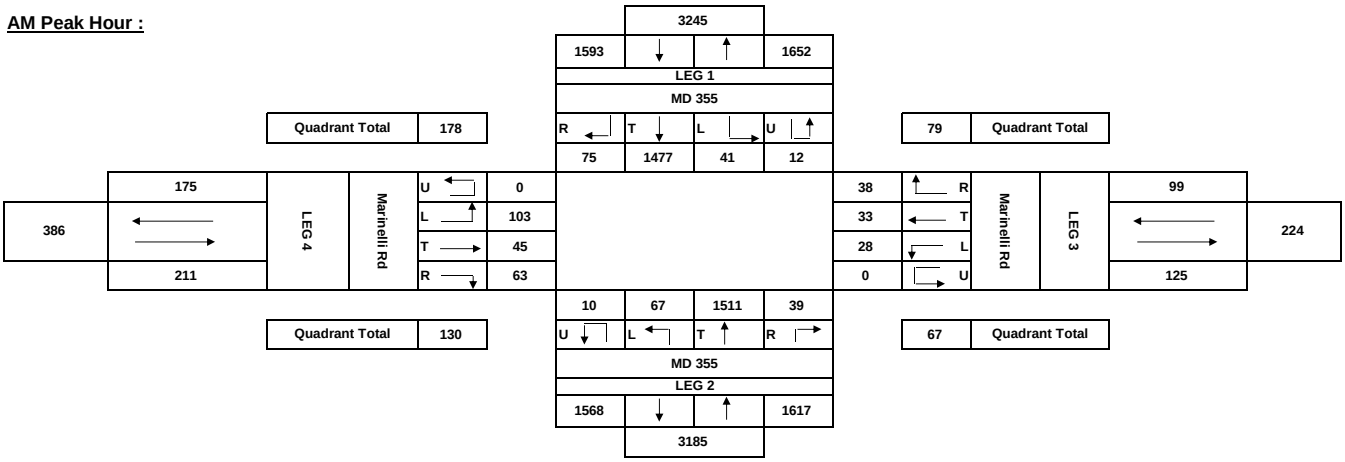

PM Peak Hour :

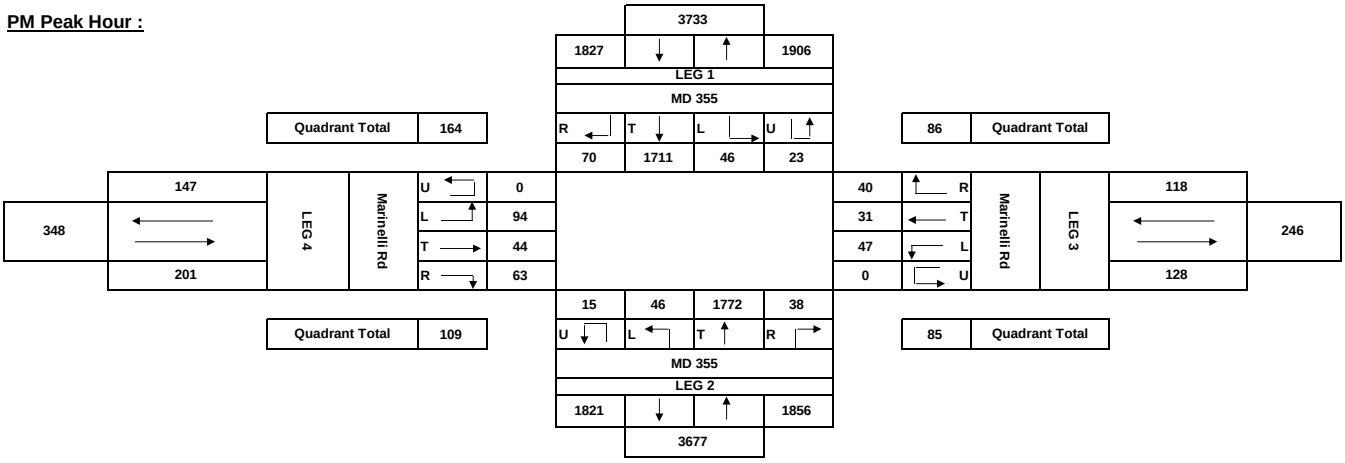

Maryland State Highway Administration
Highway Information Services Division
Turning Counts Study - Field Sheet

Request No.:
Job No.:

Location: MD 355 and Nicholson Ln
Date: 9/24/2011 Saturday
Recorder: MO/NT
Interval (dd) : 15
(In Minutes)

County: Montgomery
Town: North Bethesda
Weather: Cloudy

PEAK HOURS	AM PERIOD 6:00AM-12:00PM	Start	End	Volume	PM PERIOD 12:00PM-7:00PM	Start	End	Volume
		11:00	12:00	4626		13:00	14:00	0

Street Name-->	MD 355				MD 355				Nicholson Ln				Nicholson Ln				
HOUR	From North				From South				From East				From West				GRAND
ENDING	L	T	R	TOT	L	T	R	TOT	L	T	R	TOT	L	T	R	TOT	TOTAL
00:15				0				0				0				0	0
00:30				0				0				0				0	0
00:45				0				0				0				0	0
01:00				0				0				0				0	0
01:15				0				0				0				0	0
01:30				0				0				0				0	0
01:45				0				0				0				0	0
02:00				0				0				0				0	0
02:15				0				0				0				0	0
02:30				0				0				0				0	0
02:45				0				0				0				0	0
03:00				0				0				0				0	0
03:15				0				0				0				0	0
03:30				0				0				0				0	0
03:45				0				0				0				0	0
04:00				0				0				0				0	0
04:15				0				0				0				0	0
04:30				0				0				0				0	0
04:45				0				0				0				0	0
05:00				0				0				0				0	0
05:15				0				0				0				0	0
05:30				0				0				0				0	0
05:45				0				0				0				0	0
06:00				0				0				0				0	0
06:15				0				0				0				0	0
06:30				0				0				0				0	0
06:45				0				0				0				0	0
07:00				0				0				0				0	0
07:15				0				0				0				0	0
07:30				0				0				0				0	0
07:45				0				0				0				0	0
08:00				0				0				0				0	0
08:15				0				0				0				0	0
08:30				0				0				0				0	0
08:45				0				0				0				0	0
09:00				0				0				0				0	0
09:15				0				0				0				0	0
09:30				0				0				0				0	0
09:45				0				0				0				0	0
10:00				0				0				0				0	0
10:15	44	238	14	296	15	228	45	288	67	54	33	154	12	47	19	78	816
10:30	53	253	19	325	12	217	50	279	73	69	39	181	15	53	16	84	869
10:45	47	265	18	330	18	256	68	342	82	65	48	195	25	91	17	133	1000
11:00	64	286	18	368	14	321	83	418	70	80	39	189	27	76	24	127	1102
11:15	**67**	**293**	**15**	**375**	**25**	**327**	**91**	**443**	**72**	**82**	**51**	**205**	**20**	**79**	**21**	**120**	**1143**
11:30	**76**	**279**	**18**	**373**	**19**	**272**	**84**	**375**	**98**	**77**	**38**	**213**	**19**	**78**	**26**	**123**	**1084**
11:45	**47**	**342**	**12**	**401**	**12**	**300**	**86**	**398**	**91**	**85**	**60**	**236**	**18**	**94**	**24**	**136**	**1171**
12:00	**61**	**371**	**14**	**446**	**14**	**313**	**83**	**410**	**90**	**91**	**53**	**234**	**19**	**94**	**25**	**138**	**1228**
12:15	52	359	18	429	24	338	90	452	69	88	74	231	18	84	22	124	1236
12:30	57	349	21	427	21	354	95	470	109	90	55	254	26	80	25	131	1282
12:45	67	398	12	477	10	342	105	457	94	73	64	231	27	81	32	140	1305
13:00	67	331	11	409	27	358	107	492	105	97	70	272	14	84	23	121	1294
13:15	**73**	**356**	**12**	**441**	**16**	**366**	**86**	**468**	**93**	**85**	**60**	**238**	**26**	**72**	**34**	**132**	**1279**
13:30	**79**	**393**	**9**	**481**	**25**	**345**	**92**	**462**	**103**	**103**	**66**	**272**	**19**	**85**	**28**	**132**	**1347**
13:45	**64**	**353**	**7**	**424**	**17**	**409**	**83**	**509**	**115**	**96**	**80**	**291**	**21**	**92**	**19**	**132**	**1356**
14:00	**59**	**363**	**6**	**428**	**25**	**379**	**117**	**521**	**117**	**102**	**74**	**293**	**27**	**88**	**23**	**138**	**1380**
14:15				0				0				0				0	0
14:30				0				0				0				0	0
14:45				0				0				0				0	0
15:00				0				0				0				0	0
15:15				0				0				0				0	0
15:30				0				0				0				0	0
15:45				0				0				0				0	0
16:00				0				0				0				0	0
16:15				0				0				0				0	0
16:30				0				0				0				0	0
16:45				0				0				0				0	0
17:00				0				0				0				0	0
17:15				0				0				0				0	0
17:30				0				0				0				0	0
17:45				0				0				0				0	0
18:00				0				0				0				0	0
18:15				0				0				0				0	0
18:30				0				0				0				0	0
18:45				0				0				0				0	0
19:00				0				0				0				0	0
19:15				0				0				0				0	0
19:30				0				0				0				0	0
19:45				0				0				0				0	0
20:00				0				0				0				0	0
20:15				0				0				0				0	0
20:30				0				0				0				0	0
20:45				0				0				0				0	0
21:00				0				0				0				0	0
TOTAL	**977**	**5229**	**224**	**6430**	**294**	**5125**	**1365**	**6784**	**1448**	**1337**	**904**	**3689**	**333**	**1278**	**378**	**1989**	**18892**
AM Peak Vol	251	1285	59	1595	70	1212	344	1626	351	335	202	888	76	345	96	517	4626
PM Peak Vol	275	1465	34	1774	83	1499	378	1960	428	386	280	1094	93	337	104	534	5362

Maryland State Highway Administration
Highway Information Services Division
Turning Counts Study - Field Sheet

Request No.:
Job No.:

Location: MD 355 and Nicholson Ln
Date: 9/24/2011 Saturday
Recorder: MO/NT
Interval (dd) : 15
(In Minutes)

County: Montgomery
Town: North Bethesda
Weather: Cloudy

PEAK HOURS	AM PERIOD 6:00AM-12:00PM	Start	End	Volume	PM PERIOD 12:00PM-7:00PM	Start	End	Volume
		11:00	12:00	4626		13:00	14:00	0

PEDESTRIAN SCHOOL CHILDREN & U-TURN BREAKDOWN

Hour	MD 355			MD 355			Nicholson Ln			Nicholson Ln		
Ending	S.C.	PED.	U.T.	S.C.	PED.	U.T.	S.C.	PED.	U.T.	S.C.	PED.	U.T.
00:15												
00:30												
00:45												
01:00												
01:15												
01:30												
01:45												
02:00												
02:15												
02:30												
02:45												
03:00												
03:15												
03:30												
03:45												
04:00												
04:15												
04:30												
04:45												
05:00												
05:15												
05:30												
05:45												
06:00												
06:15												
06:30												
06:45												
07:00												
07:15												
07:30												
07:45												
08:00												
08:15												
08:30												
08:45												
09:00												
09:15												
09:30												
09:45												
10:00												
10:15									0			
10:30									0			
10:45									6			
11:00									0			
11:15									7			
11:30									1			
11:45									0			
12:00									0			
12:15									15			
12:30									0			
12:45									0			
13:00									0			
13:15									0			
13:30									0			
13:45									0			
14:00									0			
14:15												
14:30												
14:45												
15:00												
15:15												
15:30												
15:45												
16:00												
16:15												
16:30												
16:45												
17:00												
17:15												
17:30												
17:45												
18:00												
18:15												
18:30												
18:45												
19:00												
19:15												
19:30												
19:45												
20:00												
20:15												
20:30												
20:45												
21:00												
TOTAL	**0**	**0**	**0**	**0**	**0**	**0**	**0**	**0**	**29**	**0**	**0**	**0**
AM Peak Vol	0	0	0	0	0	0	0	0	8	0	0	0
PM Peak Vol	0	0	0	0	0	0	0	0	0	0	0	0

Maryland State Highway Administration
Highway Information Services Division
Turning Counts Study - Field Sheet

Request No.:
Job No.:

Location: MD 355 and Nicholson Ln
Date: 9/24/2011 Saturday
Recorder: MO/NT
Interval (dd) : 15
(In Minutes)

County: Montgomery
Town: North Bethesda
Weather: Cloudy

PEAK HOURS	AM PERIOD 6:00AM-12:00PM	Start	End	Volume	PM PERIOD 12:00PM-7:00PM	Start	End	Volume
		11:00	12:00	4626		13:00	14:00	0

Turning Movement Summary:

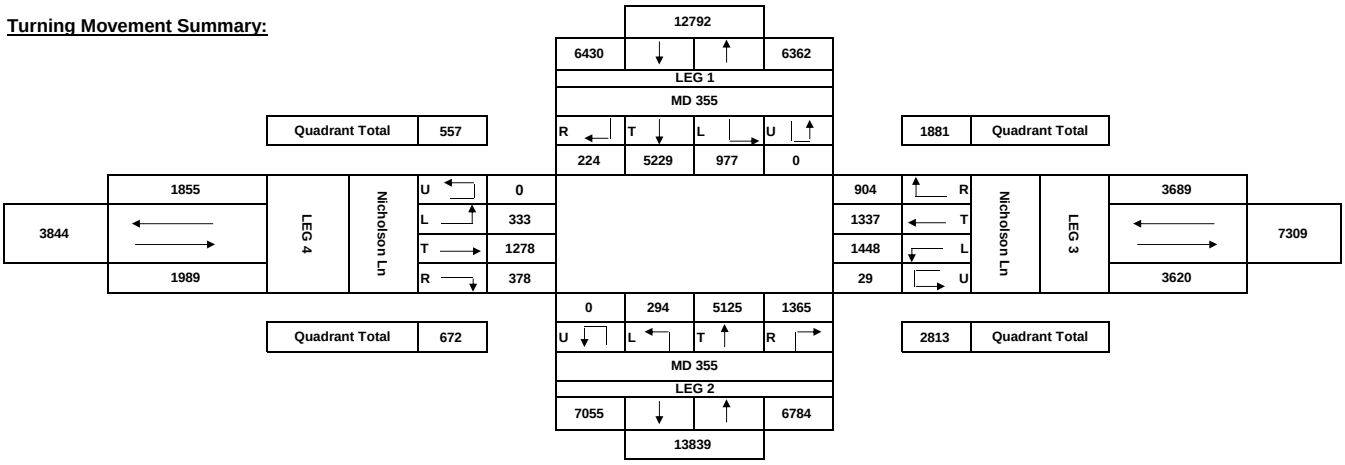

Comments:

AM Peak Hour :

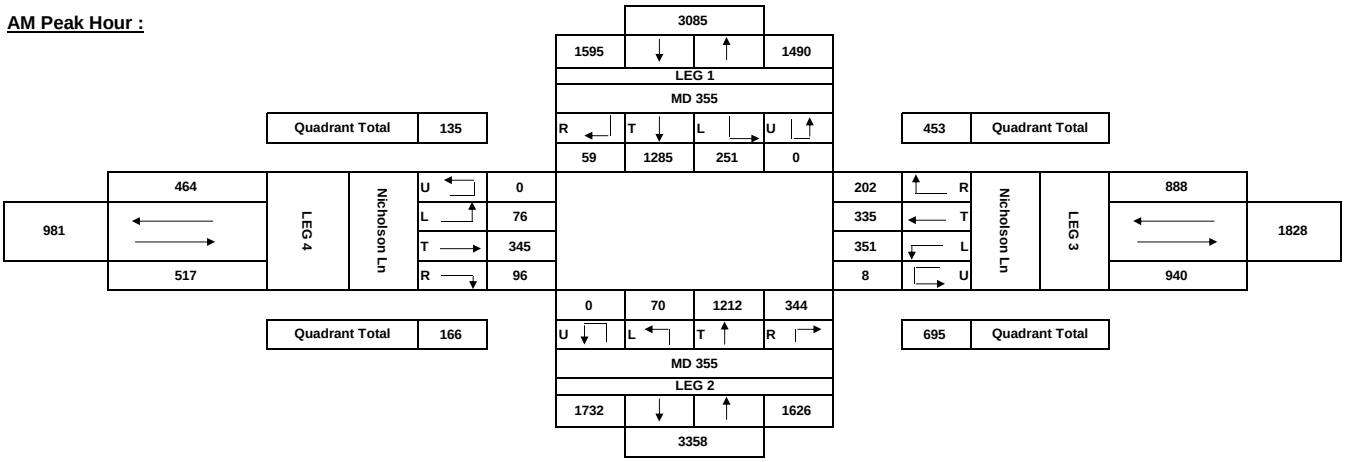

PM Peak Hour :

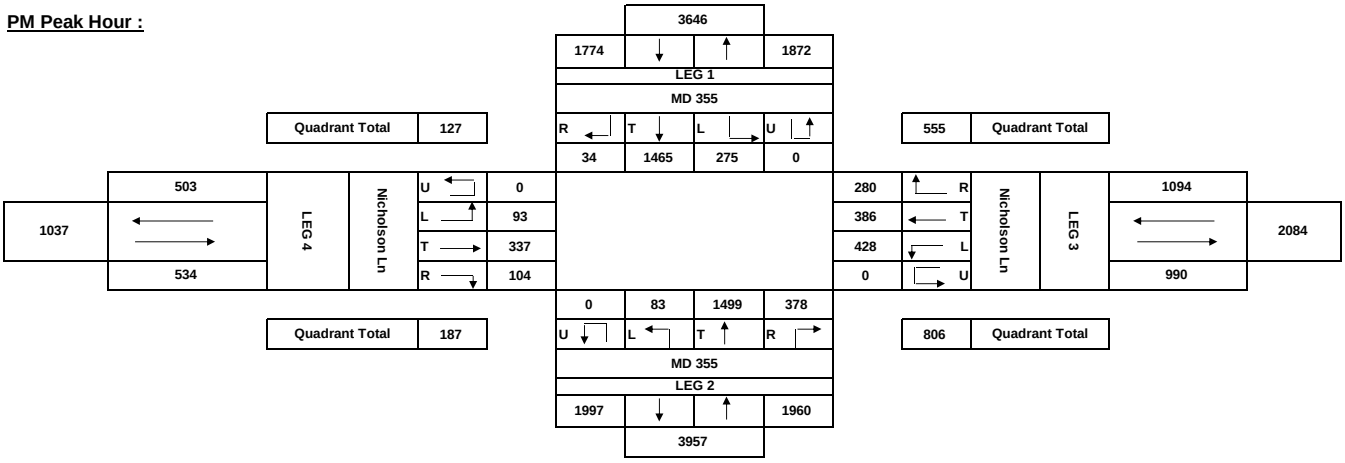

Maryland State Highway Administration
Highway Information Services Division
Turning Counts Study - Field Sheet

Request No.:
Job No.:

Location: Chapman / Maple / Randolph / Montrose
Date: 10/8/2011 Saturday
Recorder: AM
Interval (dd) : 15
(In Minutes)

County: Montgomery
Town: North Bethesda
Weather: Sunny

PEAK HOURS	AM PERIOD 6:00AM-12:00PM	Start	End	Volume	PM PERIOD 12:00PM-7:00PM	Start	End	Volume
		11:00	12:00	2248		13:00	14:00	0

Street Name-->	Chapman				Maple				Randolph				Montrose Parkway				
HOUR	From North				From South				From East				From West				GRAND
ENDING	L	T	R	TOT	L	T	R	TOT	L	T	R	TOT	L	T	R	TOT	TOTAL
00:15				0				0				0				0	0
00:30				0				0				0				0	0
00:45				0				0				0				0	0
01:00				0				0				0				0	0
01:15				0				0				0				0	0
01:30				0				0				0				0	0
01:45				0				0				0				0	0
02:00				0				0				0				0	0
02:15				0				0				0				0	0
02:30				0				0				0				0	0
02:45				0				0				0				0	0
03:00				0				0				0				0	0
03:15				0				0				0				0	0
03:30				0				0				0				0	0
03:45				0				0				0				0	0
04:00				0				0				0				0	0
04:15				0				0				0				0	0
04:30				0				0				0				0	0
04:45				0				0				0				0	0
05:00				0				0				0				0	0
05:15				0				0				0				0	0
05:30				0				0				0				0	0
05:45				0				0				0				0	0
06:00				0				0				0				0	0
06:15				0				0				0				0	0
06:30				0				0				0				0	0
06:45				0				0				0				0	0
07:00				0				0				0				0	0
07:15				0				0				0				0	0
07:30				0				0				0				0	0
07:45				0				0				0				0	0
08:00				0				0				0				0	0
08:15				0				0				0				0	0
08:30				0				0				0				0	0
08:45				0				0				0				0	0
09:00				0				0				0				0	0
09:15				0				0				0				0	0
09:30				0				0				0				0	0
09:45				0				0				0				0	0
10:00				0				0				0				0	0
10:15	66	0	9	75	1	0	1	2	0	144	72	216	32	153	0	185	478
10:30	69	1	15	85	0	1	1	2	1	165	70	236	28	156	3	187	510
10:45	51	0	7	58	1	1	1	3	2	158	82	242	27	141	3	171	474
11:00	70	0	18	88	4	1	1	6	1	152	66	219	44	149	3	196	509
11:15	**66**	**1**	**18**	**85**	**1**	**1**	**4**	**6**	**3**	**182**	**79**	**264**	**32**	**136**	**3**	**171**	**526**
11:30	**92**	**0**	**43**	**135**	**5**	**0**	**1**	**6**	**5**	**161**	**61**	**227**	**37**	**141**	**0**	**178**	**546**
11:45	**88**	**2**	**23**	**113**	**1**	**0**	**2**	**3**	**4**	**191**	**66**	**261**	**36**	**185**	**6**	**227**	**604**
12:00	**91**	**1**	**25**	**117**	**5**	**0**	**1**	**6**	**2**	**178**	**77**	**257**	**35**	**153**	**4**	**192**	**572**
12:15	84	0	23	107	3	3	0	6	1	167	69	237	26	156	3	185	535
12:30	79	3	21	103	2	0	3	5	2	183	79	264	36	169	1	206	578
12:45	86	0	22	108	6	3	2	11	7	192	75	274	39	181	6	226	619
13:00	88	0	26	114	2	0	2	4	1	190	77	268	33	202	2	237	623
13:15	**72**	**0**	**20**	**92**	**4**	**0**	**3**	**7**	**1**	**201**	**68**	**270**	**39**	**146**	**4**	**189**	**558**
13:30	**82**	**0**	**25**	**107**	**5**	**0**	**3**	**8**	**2**	**198**	**59**	**259**	**34**	**175**	**4**	**213**	**587**
13:45	**96**	**2**	**24**	**122**	**3**	**5**	**3**	**11**	**6**	**215**	**57**	**278**	**44**	**205**	**11**	**260**	**671**
14:00	**92**	**1**	**20**	**113**	**5**	**2**	**3**	**10**	**6**	**192**	**73**	**271**	**53**	**210**	**0**	**263**	**657**
14:15				0				0				0				0	0
14:30				0				0				0				0	0
14:45				0				0				0				0	0
15:00				0				0				0				0	0
15:15				0				0				0				0	0
15:30				0				0				0				0	0
15:45				0				0				0				0	0
16:00				0				0				0				0	0
16:15				0				0				0				0	0
16:30				0				0				0				0	0
16:45				0				0				0				0	0
17:00				0				0				0				0	0
17:15				0				0				0				0	0
17:30				0				0				0				0	0
17:45				0				0				0				0	0
18:00				0				0				0				0	0
18:15				0				0				0				0	0
18:30				0				0				0				0	0
18:45				0				0				0				0	0
19:00				0				0				0				0	0
19:15				0				0				0				0	0
19:30				0				0				0				0	0
19:45				0				0				0				0	0
20:00				0				0				0				0	0
20:15				0				0				0				0	0
20:30				0				0				0				0	0
20:45				0				0				0				0	0
21:00				0				0				0				0	0
TOTAL	**1272**	**11**	**339**	**1622**	**48**	**17**	**31**	**96**	**44**	**2869**	**1130**	**4043**	**575**	**2658**	**53**	**3286**	**9047**
AM Peak Vol	337	4	109	450	12	1	8	21	14	712	283	1009	140	615	13	768	2248
PM Peak Vol	342	3	89	434	17	7	12	36	15	806	257	1078	170	736	19	925	2473

Maryland State Highway Administration
Highway Information Services Division
Turning Counts Study - Field Sheet

Request No.:
Job No.:

Location: Chapman / Maple / Randolph / Montrose
Date: 10/8/2011 Saturday
Recorder: AM
Interval (dd) : 15
(In Minutes)

County: Montgomery
Town: North Bethesda
Weather: Sunny

PEAK HOURS	AM PERIOD 6:00AM-12:00PM	Start	End	Volume	PM PERIOD 12:00PM-7:00PM	Start	End	Volume
		11:00	12:00	2248		13:00	14:00	0

PEDESTRIAN SCHOOL CHILDREN & U-TURN BREAKDOWN

Hour	Chapman			Maple			Randolph			Montrose Parkway		
Ending	S.C.	PED.	U.T.	S.C.	PED.	U.T.	S.C.	PED.	U.T.	S.C.	PED.	U.T.
00:15												
00:30												
00:45												
01:00												
01:15												
01:30												
01:45												
02:00												
02:15												
02:30												
02:45												
03:00												
03:15												
03:30												
03:45												
04:00												
04:15												
04:30												
04:45												
05:00												
05:15												
05:30												
05:45												
06:00												
06:15												
06:30												
06:45												
07:00												
07:15												
07:30												
07:45												
08:00												
08:15												
08:30												
08:45												
09:00												
09:15												
09:30												
09:45												
10:00												
10:15			0			0			0			0
10:30			1			0			0			1
10:45			2			4			3			2
11:00			4			1			1			0
11:15			1			2			0			1
11:30			0			0			2			0
11:45			1			3			1			1
12:00			0			0			4			0
12:15			3			0			0			2
12:30			2			0			2			0
12:45			0			0			3			0
13:00			5			2			1			2
13:15			1			1			3			2
13:30			3			2			0			1
13:45			1			2			3			2
14:00			3			1			0			2
14:15												
14:30												
14:45												
15:00												
15:15												
15:30												
15:45												
16:00												
16:15												
16:30												
16:45												
17:00												
17:15												
17:30												
17:45												
18:00												
18:15												
18:30												
18:45												
19:00												
19:15												
19:30												
19:45												
20:00												
20:15												
20:30												
20:45												
21:00												
TOTAL	**0**	**0**	**27**	**0**	**0**	**18**	**0**	**0**	**23**	**0**	**0**	**16**
AM Peak Vol	0	0	2	0	0	5	0	0	7	0	0	2
PM Peak Vol	0	0	8	0	0	6	0	0	6	0	0	7

Maryland State Highway Administration
Highway Information Services Division
Turning Counts Study - Field Sheet

Request No.:
Job No.:

Location: Chapman / Maple / Randolph / Montrose
Date: 10/8/2011 Saturday
Recorder: AM
Interval (dd) : 15
(In Minutes)

County: Montgomery
Town: North Bethesda
Weather: Sunny

PEAK HOURS	AM PERIOD 6:00AM-12:00PM	Start	End	Volume	PM PERIOD 12:00PM-7:00PM	Start	End	Volume
		11:00	12:00	2248		13:00	14:00	0

Turning Movement Summary:

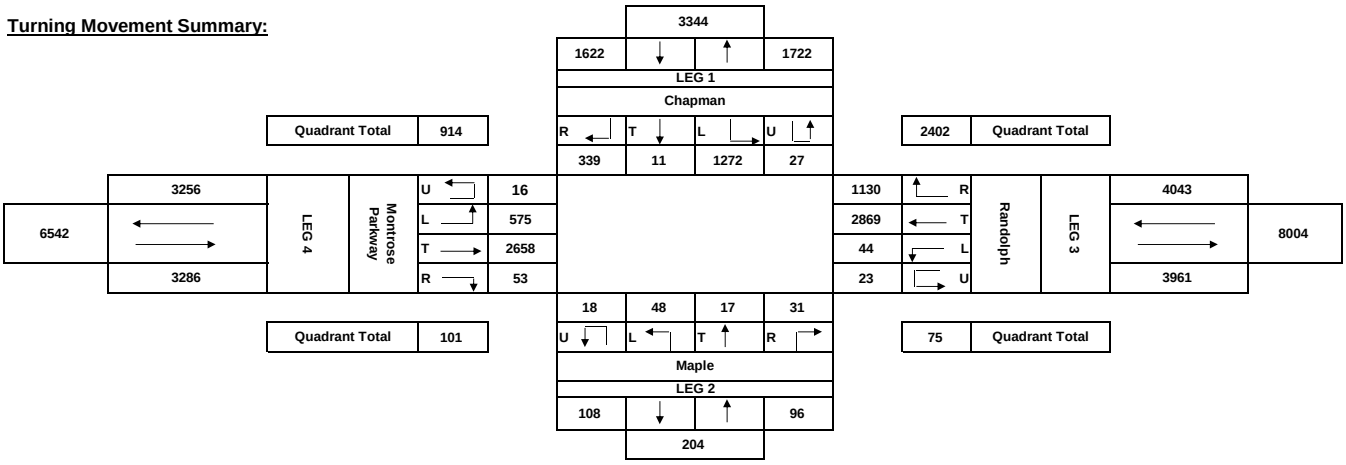

Comments:

AM Peak Hour :

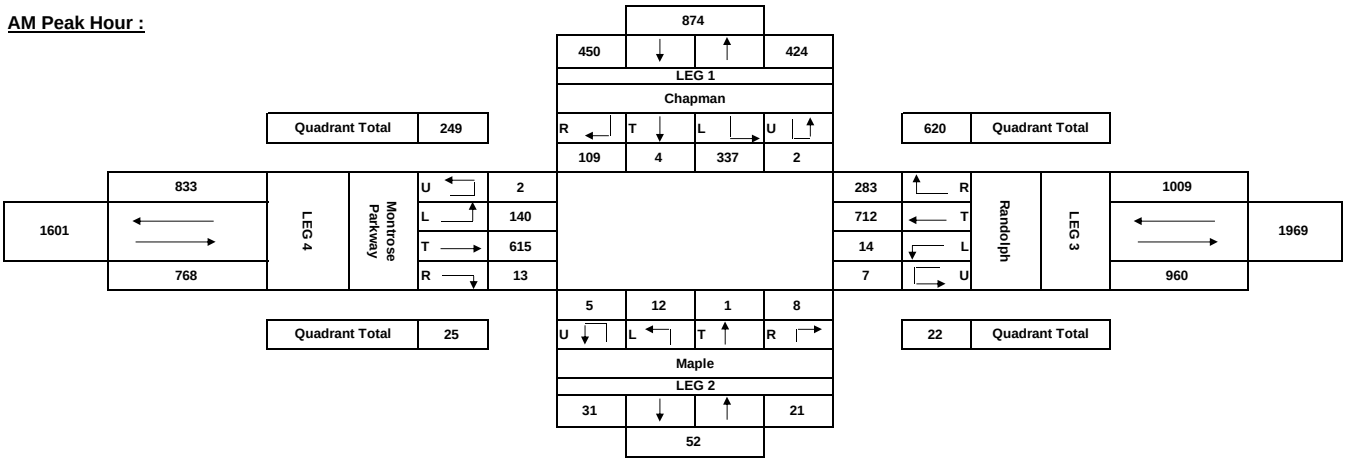

PM Peak Hour :

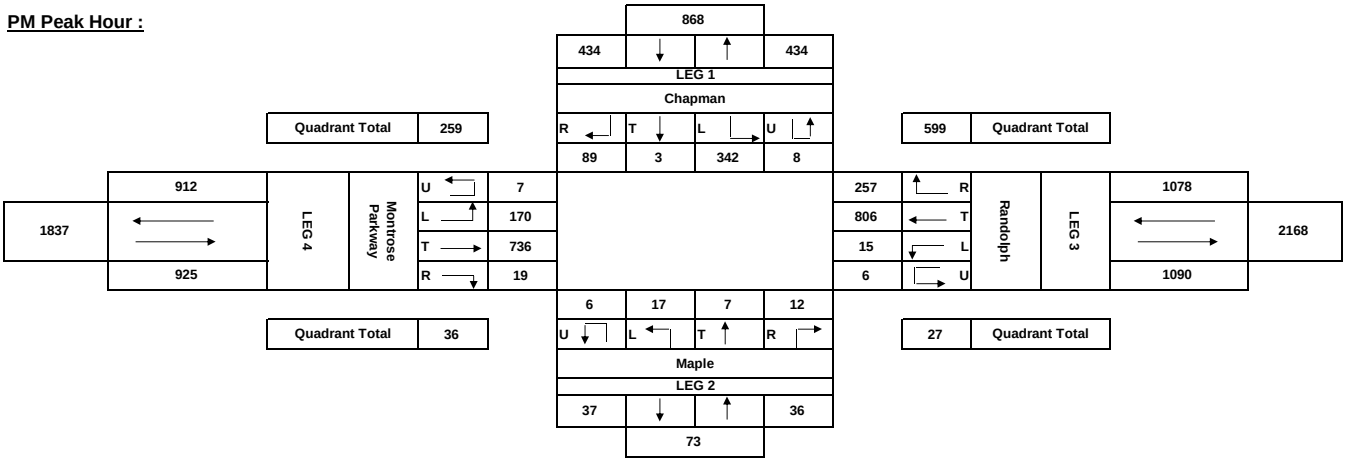

Maryland State Highway Administration
Highway Information Services Division
Turning Counts Study - Field Sheet

Request No.:
Job No.:

Location: Montrose Parkway and MD 355
Date: 10/8/2011 Saturday
Recorder: AM
Interval (dd) : 15
(In Minutes)

County: Montgomery
Town: North Bethesda
Weather: Sunny

PEAK HOURS	AM PERIOD 6:00AM-12:00PM	Start	End	Volume	PM PERIOD 12:00PM-7:00PM	Start	End	Volume
		11:00	12:00	1703		13:00	14:00	0

Street Name-->	MD 355				MD 355 Ramp				Montrose Parkway				Montrose Parkway				
HOUR	From North				From South				From East				From West				GRAND
ENDING	L	T	R	TOT	L	T	R	TOT	L	T	R	TOT	L	T	R	TOT	TOTAL
00:15				0				0				0				0	0
00:30				0				0				0				0	0
00:45				0				0				0				0	0
01:00				0				0				0				0	0
01:15				0				0				0				0	0
01:30				0				0				0				0	0
01:45				0				0				0				0	0
02:00				0				0				0				0	0
02:15				0				0				0				0	0
02:30				0				0				0				0	0
02:45				0				0				0				0	0
03:00				0				0				0				0	0
03:15				0				0				0				0	0
03:30				0				0				0				0	0
03:45				0				0				0				0	0
04:00				0				0				0				0	0
04:15				0				0				0				0	0
04:30				0				0				0				0	0
04:45				0				0				0				0	0
05:00				0				0				0				0	0
05:15				0				0				0				0	0
05:30				0				0				0				0	0
05:45				0				0				0				0	0
06:00				0				0				0				0	0
06:15				0				0				0				0	0
06:30				0				0				0				0	0
06:45				0				0				0				0	0
07:00				0				0				0				0	0
07:15				0				0				0				0	0
07:30				0				0				0				0	0
07:45				0				0				0				0	0
08:00				0				0				0				0	0
08:15				0				0				0				0	0
08:30				0				0				0				0	0
08:45				0				0				0				0	0
09:00				0				0				0				0	0
09:15				0				0				0				0	0
09:30				0				0				0				0	0
09:45				0				0				0				0	0
10:00				0				0				0				0	0
10:15	0	0	0	0	5	0	22	27	0	119	48	167	27	94	0	121	315
10:30	0	0	0	0	14	2	54	70	0	126	58	184	22	109	0	131	385
10:45	0	0	0	0	4	0	54	58	0	112	56	168	32	118	0	150	376
11:00	0	0	0	0	4	0	48	52	0	121	52	173	32	130	0	162	387
11:15	**0**	**0**	**0**	**0**	**2**	**1**	**53**	**56**	**0**	**135**	**64**	**199**	**51**	**126**	**0**	**177**	**432**
11:30	**0**	**0**	**0**	**0**	**10**	**0**	**50**	**60**	**0**	**134**	**50**	**184**	**22**	**128**	**0**	**150**	**394**
11:45	**0**	**0**	**0**	**0**	**6**	**0**	**68**	**74**	**0**	**148**	**65**	**213**	**35**	**128**	**0**	**163**	**450**
12:00	**0**	**0**	**0**	**0**	**7**	**0**	**53**	**60**	**0**	**158**	**55**	**213**	**27**	**127**	**0**	**154**	**427**
12:15	0	0	0	0	7	1	47	55	0	134	50	184	43	143	0	186	425
12:30	0	0	0	0	5	0	49	54	0	137	49	186	27	129	0	156	396
12:45	0	0	0	0	7	1	56	64	0	124	60	184	27	137	0	164	412
13:00	0	0	0	0	10	0	87	97	0	175	48	223	36	136	0	172	492
13:15	**0**	**0**	**0**	**0**	**9**	**1**	**72**	**82**	**0**	**155**	**56**	**211**	**43**	**135**	**0**	**178**	**471**
13:30	**0**	**0**	**0**	**0**	**8**	**1**	**81**	**90**	**0**	**152**	**52**	**204**	**28**	**122**	**0**	**150**	**444**
13:45	**0**	**0**	**0**	**0**	**5**	**0**	**64**	**69**	**0**	**162**	**62**	**224**	**34**	**157**	**0**	**191**	**484**
14:00	**0**	**0**	**0**	**0**	**9**	**0**	**95**	**104**	**0**	**150**	**66**	**216**	**44**	**164**	**0**	**208**	**528**
14:15				0				0				0				0	0
14:30				0				0				0				0	0
14:45				0				0				0				0	0
15:00				0				0				0				0	0
15:15				0				0				0				0	0
15:30				0				0				0				0	0
15:45				0				0				0				0	0
16:00				0				0				0				0	0
16:15				0				0				0				0	0
16:30				0				0				0				0	0
16:45				0				0				0				0	0
17:00				0				0				0				0	0
17:15				0				0				0				0	0
17:30				0				0				0				0	0
17:45				0				0				0				0	0
18:00				0				0				0				0	0
18:15				0				0				0				0	0
18:30				0				0				0				0	0
18:45				0				0				0				0	0
19:00				0				0				0				0	0
19:15				0				0				0				0	0
19:30				0				0				0				0	0
19:45				0				0				0				0	0
20:00				0				0				0				0	0
20:15				0				0				0				0	0
20:30				0				0				0				0	0
20:45				0				0				0				0	0
21:00				0				0				0				0	0
TOTAL	**0**	**0**	**0**	**0**	**112**	**7**	**953**	**1072**	**0**	**2242**	**891**	**3133**	**530**	**2083**	**0**	**2613**	**6818**
AM Peak Vol	0	0	0	0	25	1	224	250	0	575	234	809	135	509	0	644	1703
PM Peak Vol	0	0	0	0	31	2	312	345	0	619	236	855	149	578	0	727	1927

Maryland State Highway Administration
Highway Information Services Division
Turning Counts Study - Field Sheet

Request No.:
Job No.:

Location: Montrose Parkway and MD 355
Date: 10/8/2011 Saturday
Recorder: AM
Interval (dd) : 15
(In Minutes)

County: Montgomery
Town: North Bethesda
Weather: Sunny

PEAK HOURS	AM PERIOD 6:00AM-12:00PM	Start	End	Volume	PM PERIOD 12:00PM-7:00PM	Start	End	Volume
		11:00	12:00	1703		13:00	14:00	0

PEDESTRIAN SCHOOL CHILDREN & U-TURN BREAKDOWN

Hour	MD 355			MD 355 Ramp			Montrose Parkway			Montrose Parkway		
Ending	S.C.	PED.	U.T.	S.C.	PED.	U.T.	S.C.	PED.	U.T.	S.C.	PED.	U.T.
00:15												
00:30												
00:45												
01:00												
01:15												
01:30												
01:45												
02:00												
02:15												
02:30												
02:45												
03:00												
03:15												
03:30												
03:45												
04:00												
04:15												
04:30												
04:45												
05:00												
05:15												
05:30												
05:45												
06:00												
06:15												
06:30												
06:45												
07:00												
07:15												
07:30												
07:45												
08:00												
08:15												
08:30												
08:45												
09:00												
09:15												
09:30												
09:45												
10:00												
10:15												
10:30												
10:45												
11:00												
11:15												
11:30												
11:45												
12:00												
12:15												
12:30												
12:45												
13:00												
13:15												
13:30												
13:45												
14:00												
14:15												
14:30												
14:45												
15:00												
15:15												
15:30												
15:45												
16:00												
16:15												
16:30												
16:45												
17:00												
17:15												
17:30												
17:45												
18:00												
18:15												
18:30												
18:45												
19:00												
19:15												
19:30												
19:45												
20:00												
20:15												
20:30												
20:45												
21:00												
TOTAL	**0**	**0**	**0**	**0**	**0**	**0**	**0**	**0**	**0**	**0**	**0**	**0**
AM Peak Vol	0	0	0	0	0	0	0	0	0	0	0	0
PM Peak Vol	0	0	0	0	0	0	0	0	0	0	0	0

Maryland State Highway Administration
Highway Information Services Division
Turning Counts Study - Field Sheet

Request No.:
Job No.:

Location: Montrose Parkway and MD 355
Date: 10/8/2011 Saturday
Recorder: AM
Interval (dd) : 15
(In Minutes)

County: Montgomery
Town: North Bethesda
Weather: Sunny

PEAK HOURS	AM PERIOD 6:00AM-12:00PM	Start	End	Volume	PM PERIOD 12:00PM-7:00PM	Start	End	Volume
		11:00	12:00	1703		13:00	14:00	0

Turning Movement Summary:

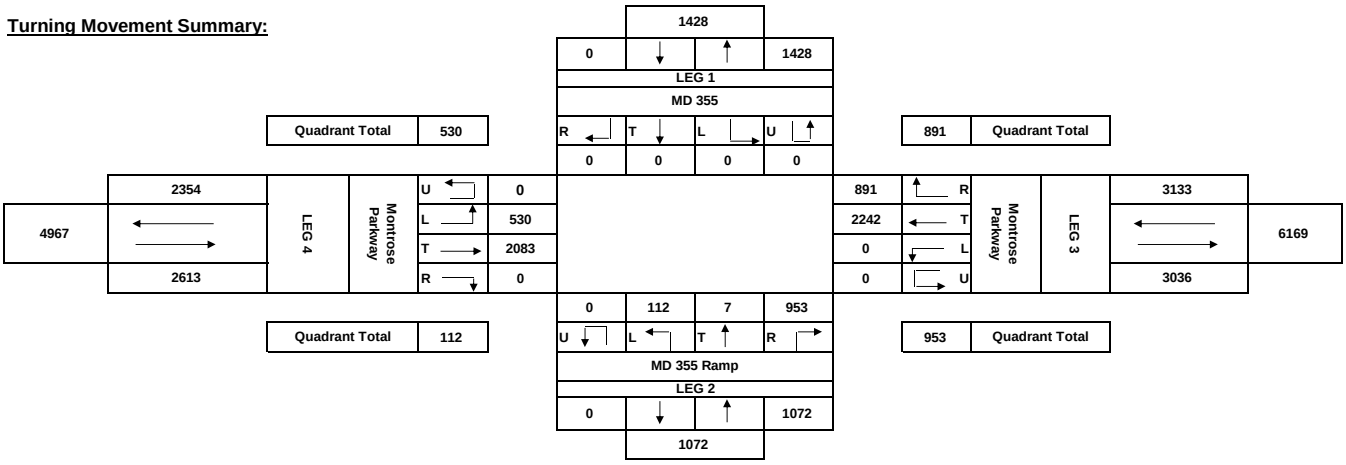

Comments:

AM Peak Hour :

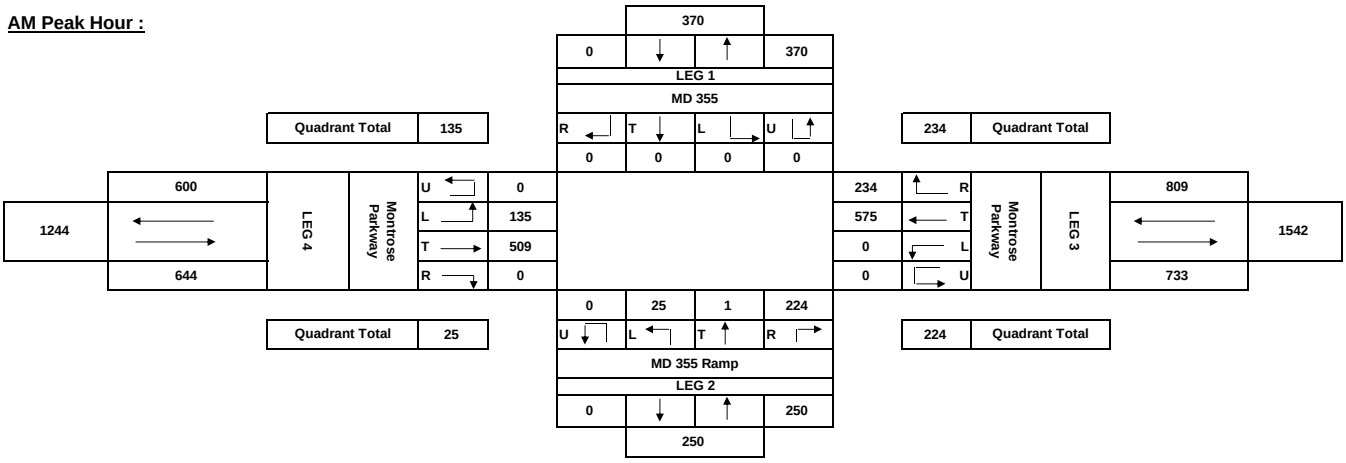

PM Peak Hour :

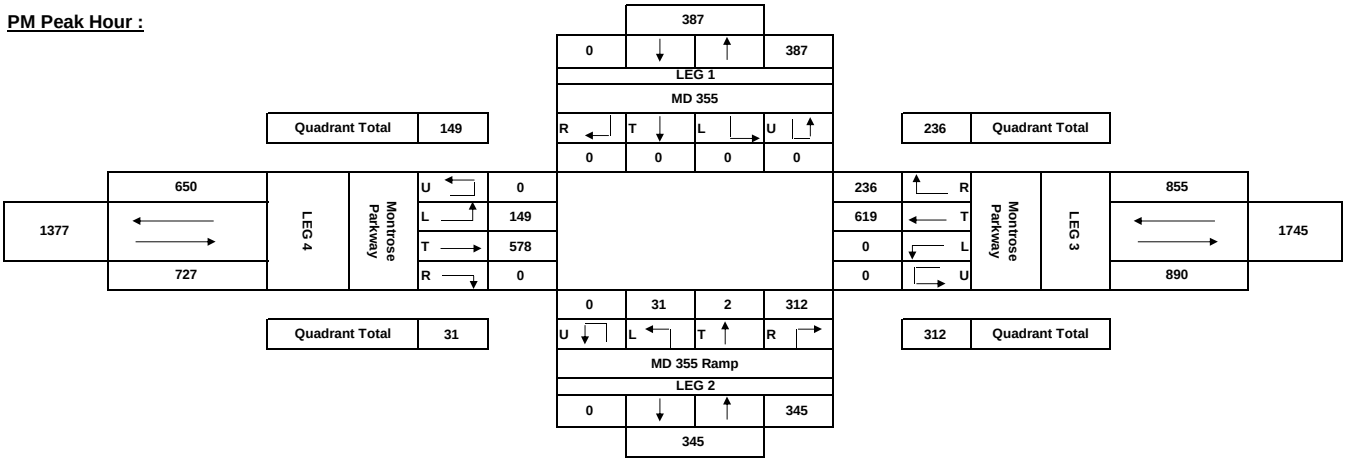

Maryland State Highway Administration
Highway Information Services Division
Turning Counts Study - Field Sheet

Request No.:
Job No.:

Location: Montrose Pkwy and East Jefferson St
Date: 9/17/2011 Saturday
Recorder: AM/MO
Interval (dd) : 15
(In Minutes)

County: Montgomery
Town: North Bethesda
Weather: Cloudy

PEAK HOURS	AM PERIOD 6:00AM-12:00PM	Start	End	Volume	PM PERIOD 12:00PM-7:00PM	Start	End	Volume
		11:00	12:00	2146		12:30	13:30	0

Street Name-->	East Jefferson St				East Jefferson St				Montrose Pkwy				Montrose Pkwy				
HOUR	From North				From South				From East				From West				GRAND
ENDING	L	T	R	TOT	L	T	R	TOT	L	T	R	TOT	L	T	R	TOT	TOTAL
00:15				0				0				0				0	0
00:30				0				0				0				0	0
00:45				0				0				0				0	0
01:00				0				0				0				0	0
01:15				0				0				0				0	0
01:30				0				0				0				0	0
01:45				0				0				0				0	0
02:00				0				0				0				0	0
02:15				0				0				0				0	0
02:30				0				0				0				0	0
02:45				0				0				0				0	0
03:00				0				0				0				0	0
03:15				0				0				0				0	0
03:30				0				0				0				0	0
03:45				0				0				0				0	0
04:00				0				0				0				0	0
04:15				0				0				0				0	0
04:30				0				0				0				0	0
04:45				0				0				0				0	0
05:00				0				0				0				0	0
05:15				0				0				0				0	0
05:30				0				0				0				0	0
05:45				0				0				0				0	0
06:00				0				0				0				0	0
06:15				0				0				0				0	0
06:30				0				0				0				0	0
06:45				0				0				0				0	0
07:00				0				0				0				0	0
07:15				0				0				0				0	0
07:30				0				0				0				0	0
07:45				0				0				0				0	0
08:00				0				0				0				0	0
08:15				0				0				0				0	0
08:30				0				0				0				0	0
08:45				0				0				0				0	0
09:00				0				0				0				0	0
09:15				0				0				0				0	0
09:30				0				0				0				0	0
09:45				0				0				0				0	0
10:00				0				0				0				0	0
10:15	9	51	7	67	32	75	2	109	3	97	15	115	18	112	51	181	472
10:30	6	47	11	64	32	70	0	102	15	77	19	111	11	133	69	213	490
10:45	10	55	7	72	32	66	2	100	3	88	11	102	6	127	71	204	478
11:00	10	45	6	61	42	62	1	105	5	94	12	111	18	166	59	243	520
11:15	**4**	**65**	**8**	**77**	**46**	**71**	**2**	**119**	**9**	**99**	**10**	**118**	**17**	**134**	**52**	**203**	**517**
11:30	**9**	**59**	**6**	**74**	**42**	**60**	**2**	**104**	**5**	**105**	**11**	**121**	**16**	**141**	**58**	**215**	**514**
11:45	**4**	**73**	**7**	**84**	**51**	**70**	**7**	**128**	**10**	**115**	**7**	**132**	**24**	**128**	**57**	**209**	**553**
12:00	**8**	**73**	**6**	**87**	**50**	**80**	**3**	**133**	**8**	**106**	**7**	**121**	**13**	**144**	**64**	**221**	**562**
12:15	7	77	9	93	45	83	6	134	8	86	8	102	12	131	66	209	538
12:30	7	68	7	82	48	78	3	129	7	112	11	130	21	146	58	225	566
12:45	**8**	**87**	**4**	**99**	**55**	**88**	**4**	**147**	**12**	**124**	**14**	**150**	**18**	**135**	**58**	**211**	**607**
13:00	**9**	**77**	**6**	**92**	**43**	**77**	**3**	**123**	**6**	**122**	**9**	**137**	**24**	**163**	**77**	**264**	**616**
13:15	**6**	**89**	**5**	**100**	**46**	**79**	**4**	**129**	**8**	**107**	**7**	**122**	**30**	**127**	**53**	**210**	**561**
13:30	**12**	**86**	**9**	**107**	**54**	**58**	**1**	**113**	**9**	**127**	**18**	**154**	**42**	**135**	**70**	**247**	**621**
13:45	7	69	6	82	63	83	2	148	9	90	8	107	11	136	53	200	537
14:00	4	71	3	78	55	89	0	144	4	107	5	116	16	152	59	227	565
14:15				0				0				0				0	0
14:30				0				0				0				0	0
14:45				0				0				0				0	0
15:00				0				0				0				0	0
15:15				0				0				0				0	0
15:30				0				0				0				0	0
15:45				0				0				0				0	0
16:00				0				0				0				0	0
16:15				0				0				0				0	0
16:30				0				0				0				0	0
16:45				0				0				0				0	0
17:00				0				0				0				0	0
17:15				0				0				0				0	0
17:30				0				0				0				0	0
17:45				0				0				0				0	0
18:00				0				0				0				0	0
18:15				0				0				0				0	0
18:30				0				0				0				0	0
18:45				0				0				0				0	0
19:00				0				0				0				0	0
19:15				0				0				0				0	0
19:30				0				0				0				0	0
19:45				0				0				0				0	0
20:00				0				0				0				0	0
20:15				0				0				0				0	0
20:30				0				0				0				0	0
20:45				0				0				0				0	0
21:00				0				0				0				0	0
TOTAL	**120**	**1092**	**107**	**1319**	**736**	**1189**	**42**	**1967**	**121**	**1656**	**172**	**1949**	**297**	**2210**	**975**	**3482**	**8717**
AM Peak Vol	25	270	27	322	189	281	14	484	32	425	35	492	70	547	231	848	2146
PM Peak Vol	35	339	24	398	198	302	12	512	35	480	48	563	114	560	258	932	2405

Maryland State Highway Administration
Highway Information Services Division
Turning Counts Study - Field Sheet

Request No.:
Job No.:

Location: Montrose Pkwy and East Jefferson St
Date: 9/17/2011 Saturday
Recorder: AM/MO
Interval (dd) : 15
(In Minutes)

County: Montgomery
Town: North Bethesda
Weather: Cloudy

PEAK HOURS	AM PERIOD 6:00AM-12:00PM	Start	End	Volume	PM PERIOD 12:00PM-7:00PM	Start	End	Volume
		11:00	12:00	2146		12:30	13:30	0

PEDESTRIAN SCHOOL CHILDREN & U-TURN BREAKDOWN

Hour	East Jefferson St			East Jefferson St			Montrose Pkwy			Montrose Pkwy		
Ending	S.C.	PED.	U.T.	S.C.	PED.	U.T.	S.C.	PED.	U.T.	S.C.	PED.	U.T.
00:15												
00:30												
00:45												
01:00												
01:15												
01:30												
01:45												
02:00												
02:15												
02:30												
02:45												
03:00												
03:15												
03:30												
03:45												
04:00												
04:15												
04:30												
04:45												
05:00												
05:15												
05:30												
05:45												
06:00												
06:15												
06:30												
06:45												
07:00												
07:15												
07:30												
07:45												
08:00												
08:15												
08:30												
08:45												
09:00												
09:15												
09:30												
09:45												
10:00												
10:15												
10:30												
10:45												
11:00												
11:15												
11:30												
11:45												
12:00												
12:15												
12:30												
12:45												
13:00												
13:15												
13:30												
13:45												
14:00												
14:15												
14:30												
14:45												
15:00												
15:15												
15:30												
15:45												
16:00												
16:15												
16:30												
16:45												
17:00												
17:15												
17:30												
17:45												
18:00												
18:15												
18:30												
18:45												
19:00												
19:15												
19:30												
19:45												
20:00												
20:15												
20:30												
20:45												
21:00												
TOTAL	**0**	**0**	**0**	**0**	**0**	**0**	**0**	**0**	**0**	**0**	**0**	**0**
AM Peak Vol	0	0	0	0	0	0	0	0	0	0	0	0
PM Peak Vol	0	0	0	0	0	0	0	0	0	0	0	0

Maryland State Highway Administration
Highway Information Services Division
Turning Counts Study - Field Sheet

Request No.:
Job No.:

Location: Montrose Pkwy and East Jefferson St
Date: 9/17/2011 Saturday
Recorder: AM/MO
Interval (dd) : 15
(In Minutes)

County: Montgomery
Town: North Bethesda
Weather: Cloudy

PEAK HOURS	AM PERIOD 6:00AM-12:00PM	Start	End	Volume	PM PERIOD 12:00PM-7:00PM	Start	End	Volume
		11:00	12:00	2146		12:30	13:30	0

Turning Movement Summary:

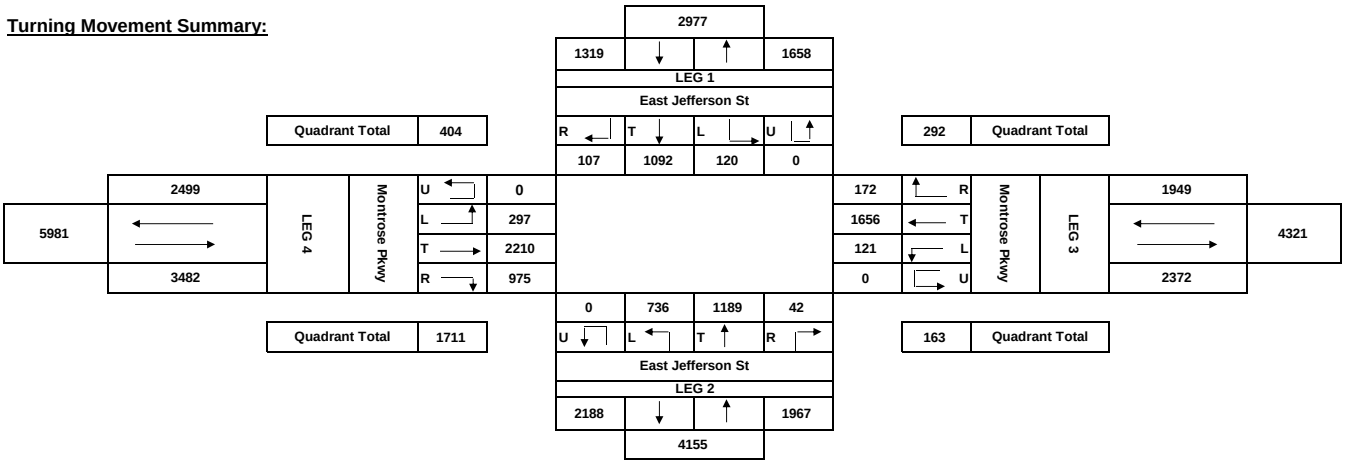

Comments:

AM Peak Hour :

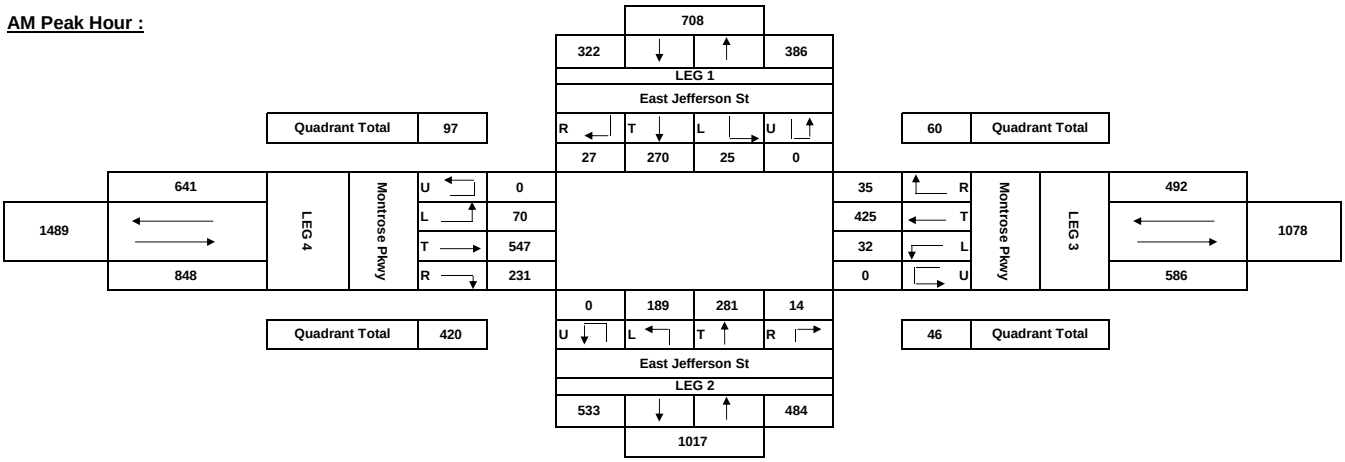

PM Peak Hour :

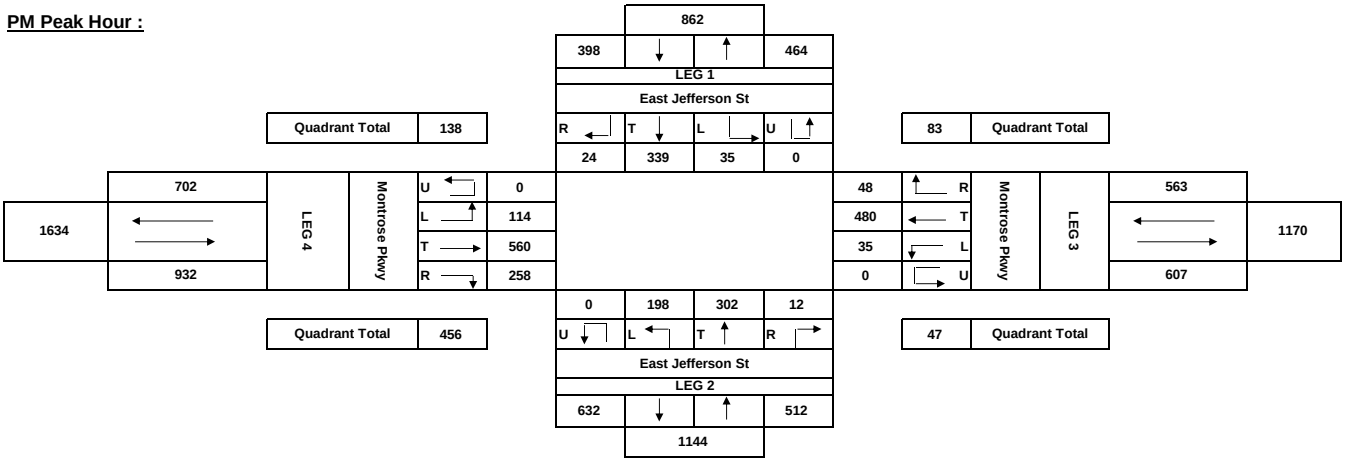

Maryland State Highway Administration
Highway Information Services Division
Turning Counts Study - Field Sheet

Request No.:
Job No.:

Location: Montrose Pkwy and Hoya St
Date: 10/1/2011 Saturday
Recorder: BC/GC
Interval (dd) : 15
(In Minutes)

County: Montgomery
Town: North Bethesda
Weather: Cloudy

PEAK HOURS	AM PERIOD 6:00AM-12:00PM	Start	End	Volume	PM PERIOD 12:00PM-7:00PM	Start	End	Volume
		10:30	11:30	1506		12:45	13:45	0

Street Name-->	Hoya St				Hoya St				Montrose Pkwy				Montrose Pkwy				
HOUR	From North				From South				From East				From West				GRAND
ENDING	L	T	R	TOT	L	T	R	TOT	L	T	R	TOT	L	T	R	TOT	TOTAL
00:15				0				0				0				0	0
00:30				0				0				0				0	0
00:45				0				0				0				0	0
01:00				0				0				0				0	0
01:15				0				0				0				0	0
01:30				0				0				0				0	0
01:45				0				0				0				0	0
02:00				0				0				0				0	0
02:15				0				0				0				0	0
02:30				0				0				0				0	0
02:45				0				0				0				0	0
03:00				0				0				0				0	0
03:15				0				0				0				0	0
03:30				0				0				0				0	0
03:45				0				0				0				0	0
04:00				0				0				0				0	0
04:15				0				0				0				0	0
04:30				0				0				0				0	0
04:45				0				0				0				0	0
05:00				0				0				0				0	0
05:15				0				0				0				0	0
05:30				0				0				0				0	0
05:45				0				0				0				0	0
06:00				0				0				0				0	0
06:15				0				0				0				0	0
06:30				0				0				0				0	0
06:45				0				0				0				0	0
07:00				0				0				0				0	0
07:15				0				0				0				0	0
07:30				0				0				0				0	0
07:45				0				0				0				0	0
08:00				0				0				0				0	0
08:15				0				0				0				0	0
08:30				0				0				0				0	0
08:45				0				0				0				0	0
09:00				0				0				0				0	0
09:15				0				0				0				0	0
09:30				0				0				0				0	0
09:45				0				0				0				0	0
10:00				0				0				0				0	0
10:15	44	8	6	58	7	5	2	14	12	86	22	120	7	100	17	124	316
10:30	48	18	7	73	10	6	2	18	13	94	26	133	1	117	8	126	350
10:45	**57**	**31**	**8**	**96**	**4**	**4**	**1**	**9**	**15**	**95**	**33**	**143**	**4**	**112**	**9**	**125**	**373**
11:00	**27**	**7**	**8**	**42**	**7**	**5**	**3**	**15**	**15**	**111**	**27**	**153**	**9**	**132**	**16**	**157**	**367**
11:15	**51**	**11**	**7**	**69**	**9**	**6**	**3**	**18**	**23**	**95**	**24**	**142**	**8**	**130**	**12**	**150**	**379**
11:30	**49**	**13**	**9**	**71**	**5**	**5**	**3**	**13**	**15**	**115**	**25**	**155**	**9**	**115**	**24**	**148**	**387**
11:45	57	9	6	72	8	3	8	19	15	86	38	139	0	120	16	136	366
12:00	36	5	9	50	9	4	6	19	5	107	37	149	3	134	16	153	371
12:15	77	7	6	90	12	9	3	24	27	130	46	203	4	116	21	141	458
12:30	49	14	11	74	3	8	5	16	30	124	56	210	8	136	23	167	467
12:45	55	10	12	77	9	5	13	27	22	101	39	162	7	118	17	142	408
13:00	**45**	**11**	**8**	**64**	**26**	**8**	**7**	**41**	**33**	**136**	**53**	**222**	**16**	**114**	**25**	**155**	**482**
13:15	**58**	**4**	**5**	**67**	**14**	**4**	**15**	**33**	**39**	**136**	**60**	**235**	**13**	**127**	**17**	**157**	**492**
13:30	**52**	**25**	**10**	**87**	**2**	**5**	**8**	**15**	**19**	**127**	**54**	**200**	**5**	**140**	**15**	**160**	**462**
13:45	**58**	**21**	**4**	**83**	**15**	**2**	**7**	**24**	**27**	**126**	**45**	**198**	**7**	**124**	**17**	**148**	**453**
14:00	59	9	6	74	7	8	5	20	27	110	48	185	4	139	13	156	435
14:15				0				0				0				0	0
14:30				0				0				0				0	0
14:45				0				0				0				0	0
15:00				0				0				0				0	0
15:15				0				0				0				0	0
15:30				0				0				0				0	0
15:45				0				0				0				0	0
16:00				0				0				0				0	0
16:15				0				0				0				0	0
16:30				0				0				0				0	0
16:45				0				0				0				0	0
17:00				0				0				0				0	0
17:15				0				0				0				0	0
17:30				0				0				0				0	0
17:45				0				0				0				0	0
18:00				0				0				0				0	0
18:15				0				0				0				0	0
18:30				0				0				0				0	0
18:45				0				0				0				0	0
19:00				0				0				0				0	0
19:15				0				0				0				0	0
19:30				0				0				0				0	0
19:45				0				0				0				0	0
20:00				0				0				0				0	0
20:15				0				0				0				0	0
20:30				0				0				0				0	0
20:45				0				0				0				0	0
21:00				0				0				0				0	0
TOTAL	**822**	**203**	**122**	**1147**	**147**	**87**	**91**	**325**	**337**	**1779**	**633**	**2749**	**105**	**1974**	**266**	**2345**	**6566**
AM Peak Vol	184	62	32	278	25	20	10	55	68	416	109	593	30	489	61	580	1506
PM Peak Vol	213	61	27	301	57	19	37	113	118	525	212	855	41	505	74	620	1889

Maryland State Highway Administration
Highway Information Services Division
Turning Counts Study - Field Sheet

Request No.:
Job No.:

Location: Montrose Pkwy and Hoya St
Date: 10/1/2011 Saturday
Recorder: BC/GC
Interval (dd) : 15
(In Minutes)

County: Montgomery
Town: North Bethesda
Weather: Cloudy

PEAK HOURS	AM PERIOD 6:00AM-12:00PM	Start	End	Volume	PM PERIOD 12:00PM-7:00PM	Start	End	Volume
		10:30	11:30	**1506**		12:45	13:45	**0**

PEDESTRIAN SCHOOL CHILDREN & U-TURN BREAKDOWN

Hour	Hoya St			Hoya St			Montrose Pkwy			Montrose Pkwy		
Ending	S.C.	PED.	U.T.	S.C.	PED.	U.T.	S.C.	PED.	U.T.	S.C.	PED.	U.T.
00:15												
00:30												
00:45												
01:00												
01:15												
01:30												
01:45												
02:00												
02:15												
02:30												
02:45												
03:00												
03:15												
03:30												
03:45												
04:00												
04:15												
04:30												
04:45												
05:00												
05:15												
05:30												
05:45												
06:00												
06:15												
06:30												
06:45												
07:00												
07:15												
07:30												
07:45												
08:00												
08:15												
08:30												
08:45												
09:00												
09:15												
09:30												
09:45												
10:00												
10:15									0			
10:30									0			
10:45									0			
11:00									0			
11:15									0			
11:30									0			
11:45									1			
12:00									3			
12:15									1			
12:30									0			
12:45									0			
13:00									0			
13:15									0			
13:30									0			
13:45									1			
14:00									3			
14:15												
14:30												
14:45												
15:00												
15:15												
15:30												
15:45												
16:00												
16:15												
16:30												
16:45												
17:00												
17:15												
17:30												
17:45												
18:00												
18:15												
18:30												
18:45												
19:00												
19:15												
19:30												
19:45												
20:00												
20:15												
20:30												
20:45												
21:00												
TOTAL	**0**	**0**	**0**	**0**	**0**	**0**	**0**	**0**	**9**	**0**	**0**	**0**
AM Peak Vol	0	0	0	0	0	0	0	0	0	0	0	0
PM Peak Vol	0	0	0	0	0	0	0	0	1	0	0	0

Maryland State Highway Administration
Highway Information Services Division
Turning Counts Study - Field Sheet

Request No.:
Job No.:

Location: Montrose Pkwy and Hoya St
Date: 10/1/2011 Saturday
Recorder: BC/GC
Interval (dd) : 15
(In Minutes)

County: Montgomery
Town: North Bethesda
Weather: Cloudy

PEAK HOURS	AM PERIOD 6:00AM-12:00PM	Start	End	Volume	PM PERIOD 12:00PM-7:00PM	Start	End	Volume
		10:30	11:30	1506		12:45	13:45	0

Turning Movement Summary:

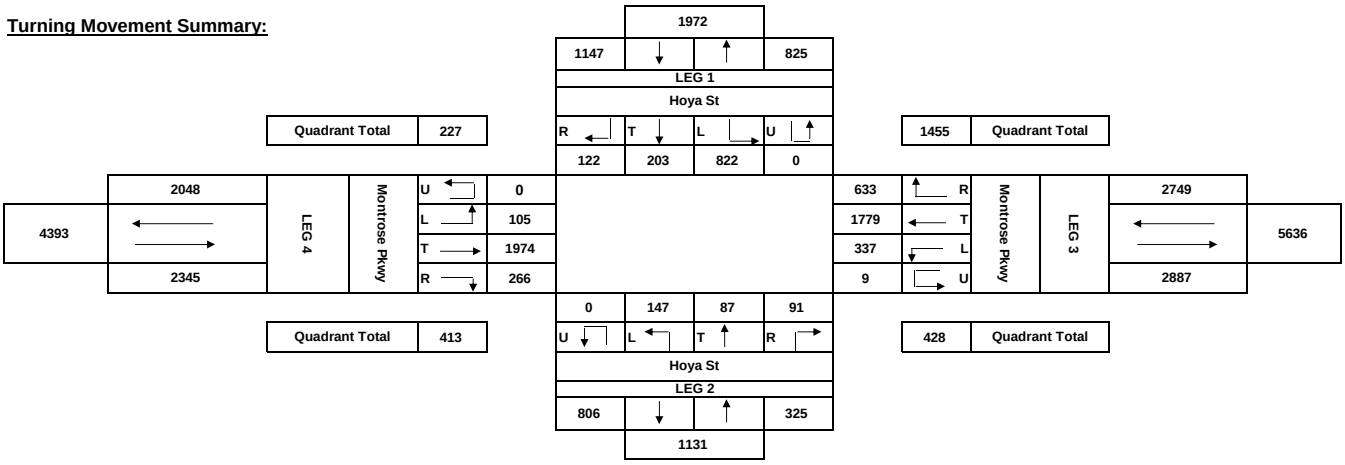

Comments:

AM Peak Hour :

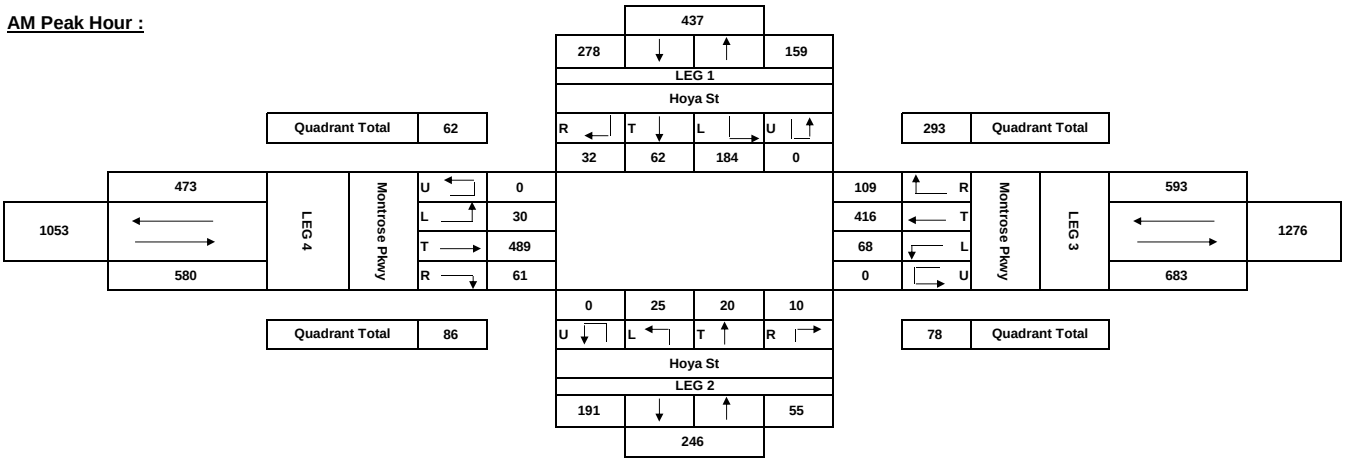

PM Peak Hour :

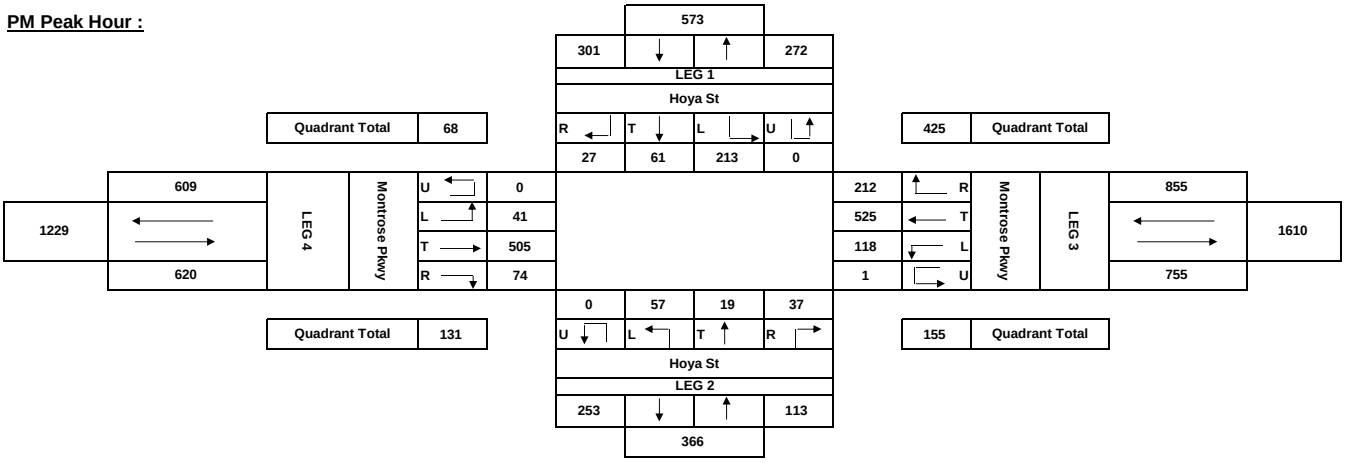

Maryland State Highway Administration
Highway Information Services Division
Turning Counts Study - Field Sheet

Request No.:
Job No.:

Location: Montrose Rd and East Jefferson St
Date: 9/17/2011 Saturday
Recorder: BC/GC
Interval (dd) : 15
(In Minutes)

County: Montgomery
Town: North Bethesda
Weather: Cloudy

PEAK HOURS	AM PERIOD 6:00AM-12:00PM	Start	End	Volume	PM PERIOD 12:00PM-7:00PM	Start	End	Volume
		11:00	12:00	2279		12:30	13:30	0

Street Name-->	East Jefferson St				East Jefferson St				Montrose Rd				Montrose Rd				
HOUR	From North				From South				From East				From West				GRAND
ENDING	L	T	R	TOT	L	T	R	TOT	L	T	R	TOT	L	T	R	TOT	TOTAL
00:15				0				0				0				0	0
00:30				0				0				0				0	0
00:45				0				0				0				0	0
01:00				0				0				0				0	0
01:15				0				0				0				0	0
01:30				0				0				0				0	0
01:45				0				0				0				0	0
02:00				0				0				0				0	0
02:15				0				0				0				0	0
02:30				0				0				0				0	0
02:45				0				0				0				0	0
03:00				0				0				0				0	0
03:15				0				0				0				0	0
03:30				0				0				0				0	0
03:45				0				0				0				0	0
04:00				0				0				0				0	0
04:15				0				0				0				0	0
04:30				0				0				0				0	0
04:45				0				0				0				0	0
05:00				0				0				0				0	0
05:15				0				0				0				0	0
05:30				0				0				0				0	0
05:45				0				0				0				0	0
06:00				0				0				0				0	0
06:15				0				0				0				0	0
06:30				0				0				0				0	0
06:45				0				0				0				0	0
07:00				0				0				0				0	0
07:15				0				0				0				0	0
07:30				0				0				0				0	0
07:45				0				0				0				0	0
08:00				0				0				0				0	0
08:15				0				0				0				0	0
08:30				0				0				0				0	0
08:45				0				0				0				0	0
09:00				0				0				0				0	0
09:15				0				0				0				0	0
09:30				0				0				0				0	0
09:45				0				0				0				0	0
10:00				0				0				0				0	0
10:15	5	43	67	115	21	101	16	138	1	49	9	59	136	54	12	202	514
10:30	4	47	77	128	22	47	24	93	0	50	17	67	106	48	13	167	455
10:45	10	34	99	143	19	79	17	115	5	60	8	73	114	51	13	178	509
11:00	9	57	93	159	9	79	13	101	4	70	12	86	136	45	7	188	534
11:15	**12**	**46**	**98**	**156**	**9**	**97**	**17**	**123**	**7**	**67**	**18**	**92**	**126**	**60**	**9**	**195**	**566**
11:30	**10**	**54**	**116**	**180**	**7**	**73**	**11**	**91**	**8**	**53**	**15**	**76**	**116**	**71**	**16**	**203**	**550**
11:45	**11**	**65**	**102**	**178**	**10**	**73**	**12**	**95**	**4**	**64**	**15**	**83**	**115**	**62**	**10**	**187**	**543**
12:00	**7**	**70**	**128**	**205**	**13**	**76**	**15**	**104**	**11**	**65**	**12**	**88**	**147**	**67**	**9**	**223**	**620**
12:15	11	77	110	198	16	95	11	122	3	79	18	100	131	67	14	212	632
12:30	23	71	105	199	7	70	17	94	9	38	17	64	124	51	11	186	543
12:45	**20**	**62**	**147**	**229**	**15**	**100**	**5**	**120**	**23**	**82**	**24**	**129**	**136**	**65**	**14**	**215**	**693**
13:00	**9**	**55**	**155**	**219**	**11**	**92**	**11**	**114**	**12**	**97**	**24**	**133**	**146**	**67**	**9**	**222**	**688**
13:15	**13**	**80**	**146**	**239**	**13**	**74**	**11**	**98**	**5**	**74**	**9**	**88**	**128**	**45**	**15**	**188**	**613**
13:30	**18**	**72**	**150**	**240**	**24**	**84**	**20**	**128**	**13**	**84**	**15**	**112**	**155**	**61**	**20**	**236**	**716**
13:45	7	13	109	129	7	83	12	102	11	103	32	146	131	72	12	215	592
14:00	6	12	91	109	13	69	18	100	3	88	16	107	104	59	17	180	496
14:15				0				0				0				0	0
14:30				0				0				0				0	0
14:45				0				0				0				0	0
15:00				0				0				0				0	0
15:15				0				0				0				0	0
15:30				0				0				0				0	0
15:45				0				0				0				0	0
16:00				0				0				0				0	0
16:15				0				0				0				0	0
16:30				0				0				0				0	0
16:45				0				0				0				0	0
17:00				0				0				0				0	0
17:15				0				0				0				0	0
17:30				0				0				0				0	0
17:45				0				0				0				0	0
18:00				0				0				0				0	0
18:15				0				0				0				0	0
18:30				0				0				0				0	0
18:45				0				0				0				0	0
19:00				0				0				0				0	0
19:15				0				0				0				0	0
19:30				0				0				0				0	0
19:45				0				0				0				0	0
20:00				0				0				0				0	0
20:15				0				0				0				0	0
20:30				0				0				0				0	0
20:45				0				0				0				0	0
21:00				0				0				0				0	0
TOTAL	**175**	**858**	**1793**	**2826**	**216**	**1292**	**230**	**1738**	**119**	**1123**	**261**	**1503**	**2051**	**945**	**201**	**3197**	**9264**
AM Peak Vol	40	235	444	719	39	319	55	413	30	249	60	339	504	260	44	808	2279
PM Peak Vol	60	269	598	927	63	350	47	460	53	337	72	462	565	238	58	861	2710

Maryland State Highway Administration
Highway Information Services Division
Turning Counts Study - Field Sheet

Request No.:
Job No.:

Location: Montrose Rd and East Jefferson St
Date: 9/17/2011 Saturday
Recorder: BC/GC
Interval (dd) : 15
(In Minutes)

County: Montgomery
Town: North Bethesda
Weather: Cloudy

PEAK HOURS	AM PERIOD 6:00AM-12:00PM	Start	End	Volume	PM PERIOD 12:00PM-7:00PM	Start	End	Volume
		11:00	12:00	2279		12:30	13:30	0

PEDESTRIAN SCHOOL CHILDREN & U-TURN BREAKDOWN

Hour	East Jefferson St			East Jefferson St			Montrose Rd			Montrose Rd		
Ending	S.C.	PED.	U.T.	S.C.	PED.	U.T.	S.C.	PED.	U.T.	S.C.	PED.	U.T.
00:15												
00:30												
00:45												
01:00												
01:15												
01:30												
01:45												
02:00												
02:15												
02:30												
02:45												
03:00												
03:15												
03:30												
03:45												
04:00												
04:15												
04:30												
04:45												
05:00												
05:15												
05:30												
05:45												
06:00												
06:15												
06:30												
06:45												
07:00												
07:15												
07:30												
07:45												
08:00												
08:15												
08:30												
08:45												
09:00												
09:15												
09:30												
09:45												
10:00												
10:15												
10:30												
10:45												
11:00												
11:15												
11:30						1						
11:45												
12:00												
12:15												
12:30												
12:45						1						
13:00												
13:15												
13:30												
13:45												
14:00												
14:15												
14:30												
14:45												
15:00												
15:15												
15:30												
15:45												
16:00												
16:15												
16:30												
16:45												
17:00												
17:15												
17:30												
17:45												
18:00												
18:15												
18:30												
18:45												
19:00												
19:15												
19:30												
19:45												
20:00												
20:15												
20:30												
20:45												
21:00												
TOTAL	**0**	**0**	**0**	**0**	**0**	**2**	**0**	**0**	**0**	**0**	**0**	**0**
AM Peak Vol	0	0	0	0	0	1	0	0	0	0	0	0
PM Peak Vol	0	0	0	0	0	1	0	0	0	0	0	0

Maryland State Highway Administration
Highway Information Services Division
Turning Counts Study - Field Sheet

Request No.:
Job No.:

Location: Montrose Rd and East Jefferson St
Date: 9/17/2011 Saturday
Recorder: BC/GC
Interval (dd) : 15
(In Minutes)

County: Montgomery
Town: North Bethesda
Weather: Cloudy

PEAK HOURS	AM PERIOD 6:00AM-12:00PM	Start	End	Volume	PM PERIOD 12:00PM-7:00PM	Start	End	Volume
		11:00	12:00	2279		12:30	13:30	0

Turning Movement Summary:

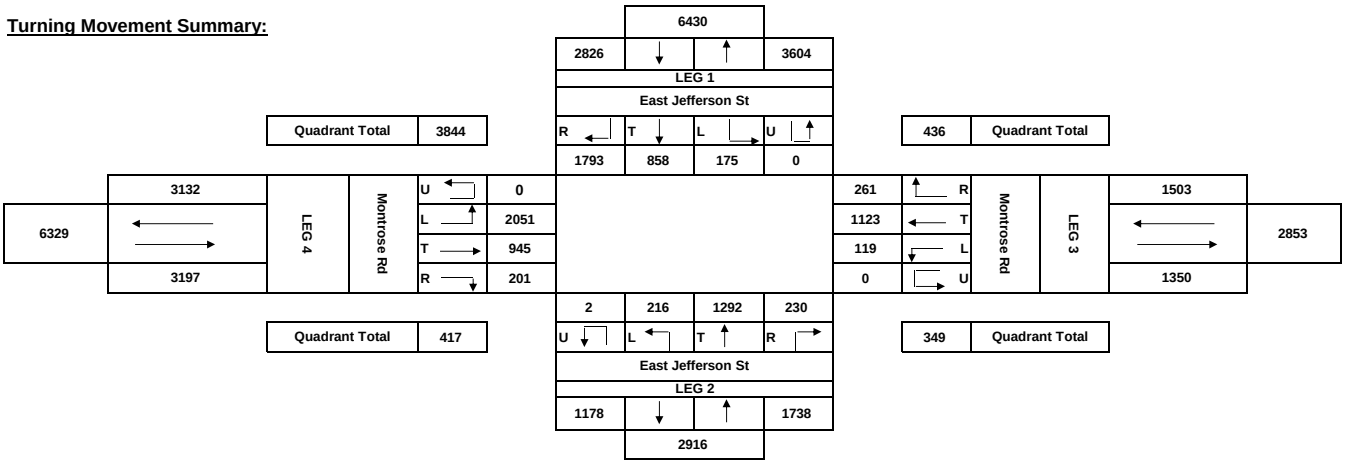

Comments:

AM Peak Hour :

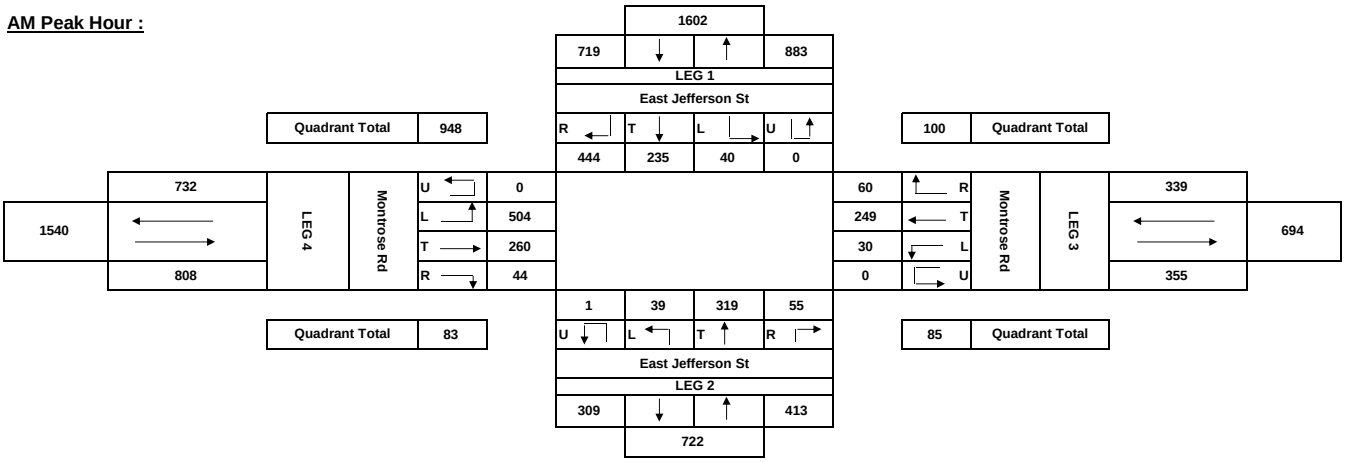

PM Peak Hour :

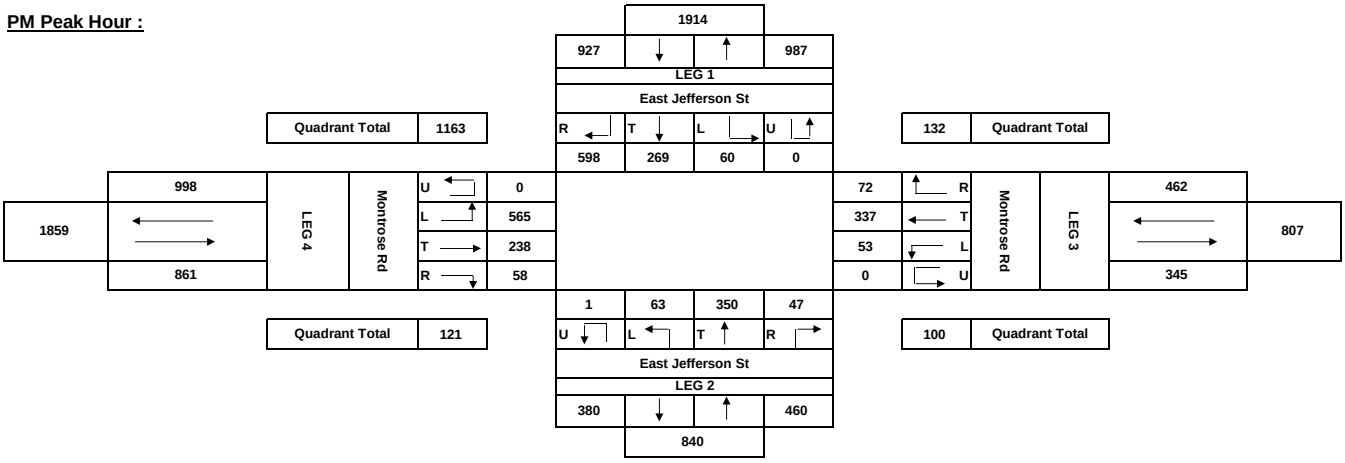

Maryland State Highway Administration
Highway Information Services Division
Turning Counts Study - Field Sheet

Request No.:
Job No.:

Location: Montrose Rd and Hoya St
Date: 10/1/2011 Saturday
Recorder: AM/DW
Interval (dd) : 15
(In Minutes)

County: Montgomery
Town: North Bethesda
Weather: Cloudy

PEAK HOURS	AM PERIOD 6:00AM-12:00PM	Start	End	Volume	PM PERIOD 12:00PM-7:00PM	Start	End	Volume
		11:00	12:00	872		12:30	13:30	0

Street Name-->	Hoya St				Hoya St				Montrose Rd				Montrose Rd				
HOUR	From North				From South				From East				From West				GRAND
ENDING	L	T	R	TOT	L	T	R	TOT	L	T	R	TOT	L	T	R	TOT	TOTAL
00:15				0				0				0				0	0
00:30				0				0				0				0	0
00:45				0				0				0				0	0
01:00				0				0				0				0	0
01:15				0				0				0				0	0
01:30				0				0				0				0	0
01:45				0				0				0				0	0
02:00				0				0				0				0	0
02:15				0				0				0				0	0
02:30				0				0				0				0	0
02:45				0				0				0				0	0
03:00				0				0				0				0	0
03:15				0				0				0				0	0
03:30				0				0				0				0	0
03:45				0				0				0				0	0
04:00				0				0				0				0	0
04:15				0				0				0				0	0
04:30				0				0				0				0	0
04:45				0				0				0				0	0
05:00				0				0				0				0	0
05:15				0				0				0				0	0
05:30				0				0				0				0	0
05:45				0				0				0				0	0
06:00				0				0				0				0	0
06:15				0				0				0				0	0
06:30				0				0				0				0	0
06:45				0				0				0				0	0
07:00				0				0				0				0	0
07:15				0				0				0				0	0
07:30				0				0				0				0	0
07:45				0				0				0				0	0
08:00				0				0				0				0	0
08:15				0				0				0				0	0
08:30				0				0				0				0	0
08:45				0				0				0				0	0
09:00				0				0				0				0	0
09:15				0				0				0				0	0
09:30				0				0				0				0	0
09:45				0				0				0				0	0
10:00				0				0				0				0	0
10:15	1	19	43	63	15	15	2	32	4	0	4	8	13	4	31	48	151
10:30	2	22	41	65	17	13	1	31	14	0	4	18	13	19	32	64	178
10:45	3	29	57	89	10	20	4	34	8	2	4	14	32	9	43	84	221
11:00	0	20	52	72	4	22	2	28	4	0	7	11	22	12	28	62	173
11:15	**0**	**37**	**53**	**90**	**9**	**18**	**1**	**28**	**8**	**1**	**6**	**15**	**22**	**15**	**34**	**71**	**204**
11:30	**2**	**41**	**66**	**109**	**15**	**21**	**3**	**39**	**4**	**1**	**6**	**11**	**48**	**4**	**30**	**82**	**241**
11:45	**3**	**30**	**50**	**83**	**17**	**23**	**1**	**41**	**11**	**0**	**7**	**18**	**27**	**14**	**28**	**69**	**211**
12:00	**2**	**25**	**64**	**91**	**14**	**22**	**5**	**41**	**9**	**1**	**5**	**15**	**28**	**12**	**29**	**69**	**216**
12:15	3	37	67	107	16	38	2	56	11	0	9	20	22	20	50	92	275
12:30	3	32	66	101	17	40	5	62	11	3	13	27	21	14	45	80	270
12:45	**5**	**29**	**77**	**111**	**16**	**24**	**6**	**46**	**9**	**0**	**9**	**18**	**20**	**11**	**43**	**74**	**249**
13:00	**6**	**36**	**68**	**110**	**15**	**37**	**7**	**59**	**13**	**3**	**9**	**25**	**28**	**17**	**32**	**77**	**271**
13:15	**3**	**37**	**75**	**115**	**11**	**35**	**5**	**51**	**5**	**3**	**6**	**14**	**21**	**7**	**52**	**80**	**260**
13:30	**3**	**42**	**76**	**121**	**17**	**32**	**13**	**62**	**15**	**3**	**18**	**36**	**21**	**17**	**36**	**74**	**293**
13:45	3	29	81	113	12	31	4	47	6	1	4	11	33	8	35	76	247
14:00	3	36	68	107	15	27	3	45	10	0	5	15	27	10	43	80	247
14:15				0				0				0				0	0
14:30				0				0				0				0	0
14:45				0				0				0				0	0
15:00				0				0				0				0	0
15:15				0				0				0				0	0
15:30				0				0				0				0	0
15:45				0				0				0				0	0
16:00				0				0				0				0	0
16:15				0				0				0				0	0
16:30				0				0				0				0	0
16:45				0				0				0				0	0
17:00				0				0				0				0	0
17:15				0				0				0				0	0
17:30				0				0				0				0	0
17:45				0				0				0				0	0
18:00				0				0				0				0	0
18:15				0				0				0				0	0
18:30				0				0				0				0	0
18:45				0				0				0				0	0
19:00				0				0				0				0	0
19:15				0				0				0				0	0
19:30				0				0				0				0	0
19:45				0				0				0				0	0
20:00				0				0				0				0	0
20:15				0				0				0				0	0
20:30				0				0				0				0	0
20:45				0				0				0				0	0
21:00				0				0				0				0	0
TOTAL	**42**	**501**	**1004**	**1547**	**220**	**418**	**64**	**702**	**142**	**18**	**116**	**276**	**398**	**193**	**591**	**1182**	**3707**
AM Peak Vol	7	133	233	373	55	84	10	149	32	3	24	59	125	45	121	291	872
PM Peak Vol	17	144	296	457	59	128	31	218	42	9	42	93	90	52	163	305	1073

Maryland State Highway Administration
Highway Information Services Division
Turning Counts Study - Field Sheet

Request No.:
Job No.:

Location: Montrose Rd and Hoya St
Date: 10/1/2011 Saturday
Recorder: AM/DW
Interval (dd) : 15
(In Minutes)

County: Montgomery
Town: North Bethesda
Weather: Cloudy

PEAK HOURS	AM PERIOD 6:00AM-12:00PM	Start	End	Volume	PM PERIOD 12:00PM-7:00PM	Start	End	Volume
		11:00	12:00	872		12:30	13:30	0

PEDESTRIAN SCHOOL CHILDREN & U-TURN BREAKDOWN

Hour	Hoya St			Hoya St			Montrose Rd			Montrose Rd		
Ending	S.C.	PED.	U.T.	S.C.	PED.	U.T.	S.C.	PED.	U.T.	S.C.	PED.	U.T.
00:15												
00:30												
00:45												
01:00												
01:15												
01:30												
01:45												
02:00												
02:15												
02:30												
02:45												
03:00												
03:15												
03:30												
03:45												
04:00												
04:15												
04:30												
04:45												
05:00												
05:15												
05:30												
05:45												
06:00												
06:15												
06:30												
06:45												
07:00												
07:15												
07:30												
07:45												
08:00												
08:15												
08:30												
08:45												
09:00												
09:15												
09:30												
09:45												
10:00												
10:15												
10:30												
10:45												
11:00												
11:15												
11:30												
11:45												
12:00												
12:15												
12:30												
12:45												
13:00												
13:15												
13:30												
13:45												
14:00												
14:15												
14:30												
14:45												
15:00												
15:15												
15:30												
15:45												
16:00												
16:15												
16:30												
16:45												
17:00												
17:15												
17:30												
17:45												
18:00												
18:15												
18:30												
18:45												
19:00												
19:15												
19:30												
19:45												
20:00												
20:15												
20:30												
20:45												
21:00												
TOTAL	**0**	**0**	**0**	**0**	**0**	**0**	**0**	**0**	**0**	**0**	**0**	**0**
AM Peak Vol	0	0	0	0	0	0	0	0	0	0	0	0
PM Peak Vol	0	0	0	0	0	0	0	0	0	0	0	0

Maryland State Highway Administration
Highway Information Services Division
Turning Counts Study - Field Sheet

Request No.:
Job No.:

Location: Montrose Rd and Hoya St
Date: 10/1/2011 Saturday
Recorder: AM/DW
Interval (dd) : 15
(In Minutes)

County: Montgomery
Town: North Bethesda
Weather: Cloudy

PEAK HOURS	AM PERIOD 6:00AM-12:00PM	Start	End	Volume	PM PERIOD 12:00PM-7:00PM	Start	End	Volume
		11:00	12:00	872		12:30	13:30	0

Turning Movement Summary:

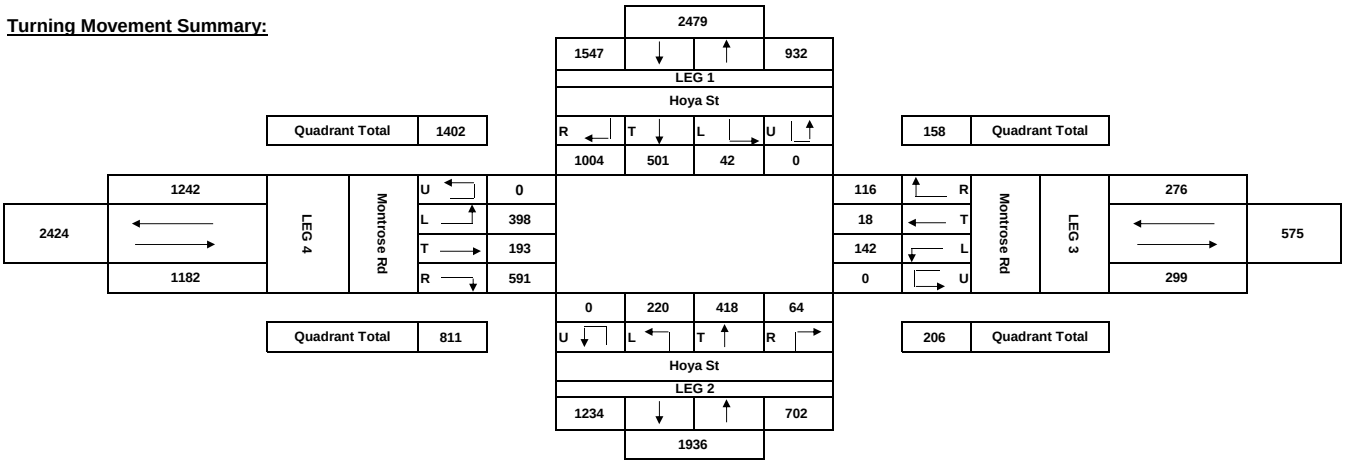

Comments:

AM Peak Hour :

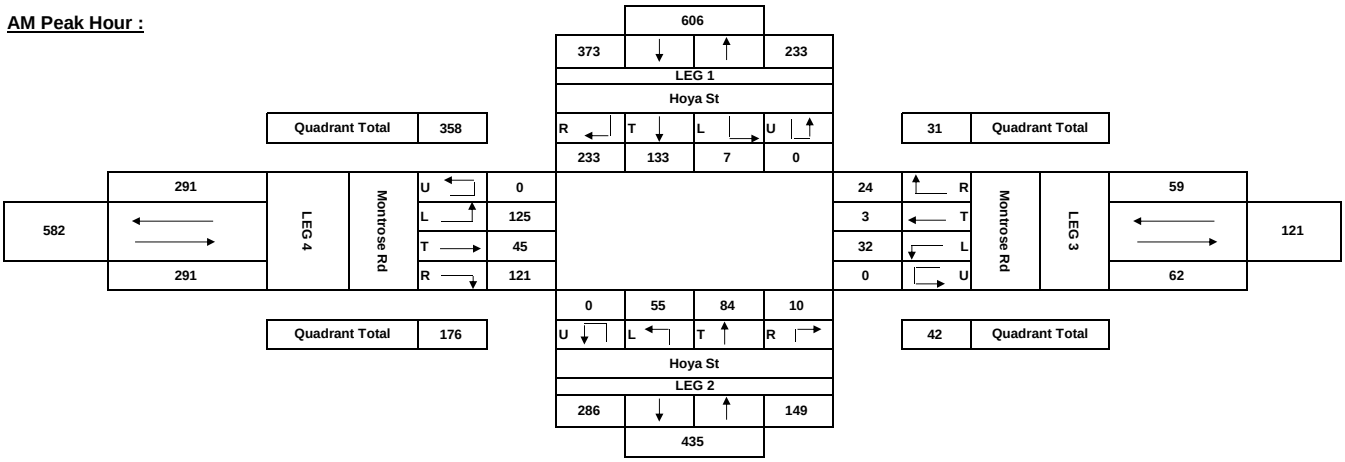

PM Peak Hour :

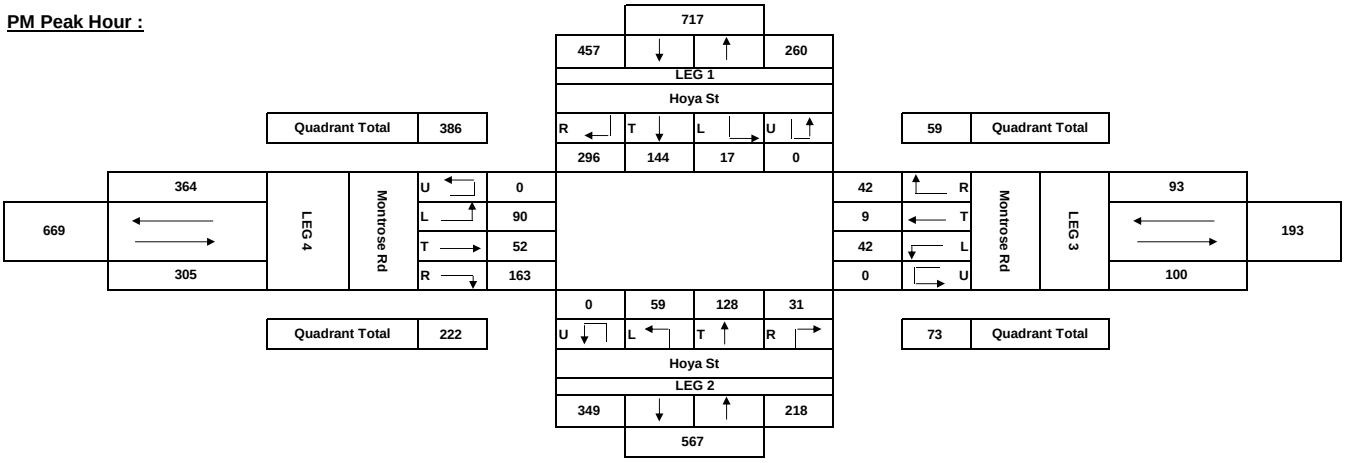

Maryland State Highway Administration
Highway Information Services Division
Turning Counts Study - Field Sheet

Request No.:
Job No.:

Location: Montrose Road and Montrose Parkway
Date: 10/15/2011 Saturday
Recorder: AM
Interval (dd) : 15
(In Minutes)

County: Montgomery
Town: North Bethesda
Weather: Sunny

PEAK HOURS	AM PERIOD 6:00AM-12:00PM	Start	End	Volume	PM PERIOD 12:00PM-7:00PM	Start	End	Volume
		11:00	12:00	3207		12:30	13:30	0

Street Name-->	Montrose Road				Montrose Road				Montrose Parkway				Montrose Parkway				
HOUR	From North				From South				From East				From West				GRAND
ENDING	L	T	R	TOT	L	T	R	TOT	L	T	R	TOT	L	T	R	TOT	TOTAL
00:15				0				0				0				0	0
00:30				0				0				0				0	0
00:45				0				0				0				0	0
01:00				0				0				0				0	0
01:15				0				0				0				0	0
01:30				0				0				0				0	0
01:45				0				0				0				0	0
02:00				0				0				0				0	0
02:15				0				0				0				0	0
02:30				0				0				0				0	0
02:45				0				0				0				0	0
03:00				0				0				0				0	0
03:15				0				0				0				0	0
03:30				0				0				0				0	0
03:45				0				0				0				0	0
04:00				0				0				0				0	0
04:15				0				0				0				0	0
04:30				0				0				0				0	0
04:45				0				0				0				0	0
05:00				0				0				0				0	0
05:15				0				0				0				0	0
05:30				0				0				0				0	0
05:45				0				0				0				0	0
06:00				0				0				0				0	0
06:15				0				0				0				0	0
06:30				0				0				0				0	0
06:45				0				0				0				0	0
07:00				0				0				0				0	0
07:15				0				0				0				0	0
07:30				0				0				0				0	0
07:45				0				0				0				0	0
08:00				0				0				0				0	0
08:15				0				0				0				0	0
08:30				0				0				0				0	0
08:45				0				0				0				0	0
09:00				0				0				0				0	0
09:15				0				0				0				0	0
09:30				0				0				0				0	0
09:45				0				0				0				0	0
10:00				0				0				0				0	0
10:15	0	0	118	118	0	0	0	0	0	138	1	139	154	130	0	284	541
10:30	0	0	144	144	0	0	0	0	0	133	2	135	197	168	0	365	644
10:45	0	0	161	161	0	0	0	0	0	155	1	156	248	165	0	413	730
11:00	0	0	165	165	0	0	0	0	0	124	1	125	220	182	0	402	692
11:15	**0**	**0**	**192**	**192**	**0**	**0**	**0**	**0**	**0**	**150**	**3**	**153**	**192**	**204**	**0**	**396**	**741**
11:30	**0**	**0**	**179**	**179**	**0**	**0**	**0**	**0**	**0**	**167**	**2**	**169**	**203**	**199**	**0**	**402**	**750**
11:45	**0**	**0**	**223**	**223**	**0**	**0**	**0**	**0**	**0**	**182**	**1**	**183**	**213**	**235**	**0**	**448**	**854**
12:00	**0**	**0**	**211**	**211**	**0**	**0**	**0**	**0**	**0**	**172**	**1**	**173**	**252**	**226**	**0**	**478**	**862**
12:15	0	0	263	263	0	0	0	0	0	187	1	188	231	265	0	496	947
12:30	0	0	241	241	0	0	0	0	0	203	3	206	242	252	0	494	941
12:45	**0**	**0**	**271**	**271**	**0**	**0**	**0**	**0**	**0**	**178**	**0**	**178**	**251**	**291**	**0**	**542**	**991**
13:00	**0**	**0**	**283**	**283**	**0**	**0**	**0**	**0**	**0**	**215**	**4**	**219**	**245**	**290**	**0**	**535**	**1037**
13:15	**0**	**0**	**271**	**271**	**0**	**0**	**0**	**0**	**0**	**213**	**2**	**215**	**228**	**272**	**0**	**500**	**986**
13:30	**0**	**0**	**267**	**267**	**0**	**0**	**0**	**0**	**0**	**203**	**3**	**206**	**230**	**264**	**0**	**494**	**967**
13:45	0	0	265	265	0	0	0	0	0	142	4	146	219	261	0	480	891
14:00	0	0	175	175	0	0	0	0	0	171	3	174	132	260	0	392	741
14:15				0				0				0				0	0
14:30				0				0				0				0	0
14:45				0				0				0				0	0
15:00				0				0				0				0	0
15:15				0				0				0				0	0
15:30				0				0				0				0	0
15:45				0				0				0				0	0
16:00				0				0				0				0	0
16:15				0				0				0				0	0
16:30				0				0				0				0	0
16:45				0				0				0				0	0
17:00				0				0				0				0	0
17:15				0				0				0				0	0
17:30				0				0				0				0	0
17:45				0				0				0				0	0
18:00				0				0				0				0	0
18:15				0				0				0				0	0
18:30				0				0				0				0	0
18:45				0				0				0				0	0
19:00				0				0				0				0	0
19:15				0				0				0				0	0
19:30				0				0				0				0	0
19:45				0				0				0				0	0
20:00				0				0				0				0	0
20:15				0				0				0				0	0
20:30				0				0				0				0	0
20:45				0				0				0				0	0
21:00				0				0				0				0	0
TOTAL	**0**	**0**	**3429**	**3429**	**0**	**0**	**0**	**0**	**0**	**2733**	**32**	**2765**	**3457**	**3664**	**0**	**7121**	**13315**
AM Peak Vol	0	0	805	805	0	0	0	0	0	671	7	678	860	864	0	1724	3207
PM Peak Vol	0	0	1092	1092	0	0	0	0	0	809	9	818	954	1117	0	2071	3981

Maryland State Highway Administration
Highway Information Services Division
Turning Counts Study - Field Sheet

Request No.:
Job No.:

Location: Montrose Road and Montrose Parkway
Date: 10/15/2011 Saturday
Recorder: AM
Interval (dd) : 15
(In Minutes)

County: Montgomery
Town: North Bethesda
Weather: Sunny

PEAK HOURS	AM PERIOD 6:00AM-12:00PM	Start	End	Volume	PM PERIOD 12:00PM-7:00PM	Start	End	Volume
		11:00	12:00	3207		12:30	13:30	0

PEDESTRIAN SCHOOL CHILDREN & U-TURN BREAKDOWN

Hour	Montrose Road			Montrose Road			Montrose Parkway			Montrose Parkway		
Ending	S.C.	PED.	U.T.	S.C.	PED.	U.T.	S.C.	PED.	U.T.	S.C.	PED.	U.T.
00:15												
00:30												
00:45												
01:00												
01:15												
01:30												
01:45												
02:00												
02:15												
02:30												
02:45												
03:00												
03:15												
03:30												
03:45												
04:00												
04:15												
04:30												
04:45												
05:00												
05:15												
05:30												
05:45												
06:00												
06:15												
06:30												
06:45												
07:00												
07:15												
07:30												
07:45												
08:00												
08:15												
08:30												
08:45												
09:00												
09:15												
09:30												
09:45												
10:00												
10:15												3
10:30												1
10:45												4
11:00												5
11:15												5
11:30												0
11:45												2
12:00												3
12:15												6
12:30												6
12:45												5
13:00												3
13:15												4
13:30												5
13:45												2
14:00												5
14:15												
14:30												
14:45												
15:00												
15:15												
15:30												
15:45												
16:00												
16:15												
16:30												
16:45												
17:00												
17:15												
17:30												
17:45												
18:00												
18:15												
18:30												
18:45												
19:00												
19:15												
19:30												
19:45												
20:00												
20:15												
20:30												
20:45												
21:00												
TOTAL	**0**	**0**	**0**	**0**	**0**	**0**	**0**	**0**	**0**	**0**	**0**	**59**
AM Peak Vol	0	0	0	0	0	0	0	0	0	0	0	10
PM Peak Vol	0	0	0	0	0	0	0	0	0	0	0	17

Maryland State Highway Administration
Highway Information Services Division
Turning Counts Study - Field Sheet

Request No.:
Job No.:

Location: Montrose Road and Montrose Parkway
Date: 10/15/2011 Saturday
Recorder: AM
Interval (dd) : 15
(In Minutes)

County: Montgomery
Town: North Bethesda
Weather: Sunny

PEAK HOURS	AM PERIOD 6:00AM-12:00PM	Start	End	Volume	PM PERIOD 12:00PM-7:00PM	Start	End	Volume
		11:00	12:00	3207		12:30	13:30	0

Turning Movement Summary:

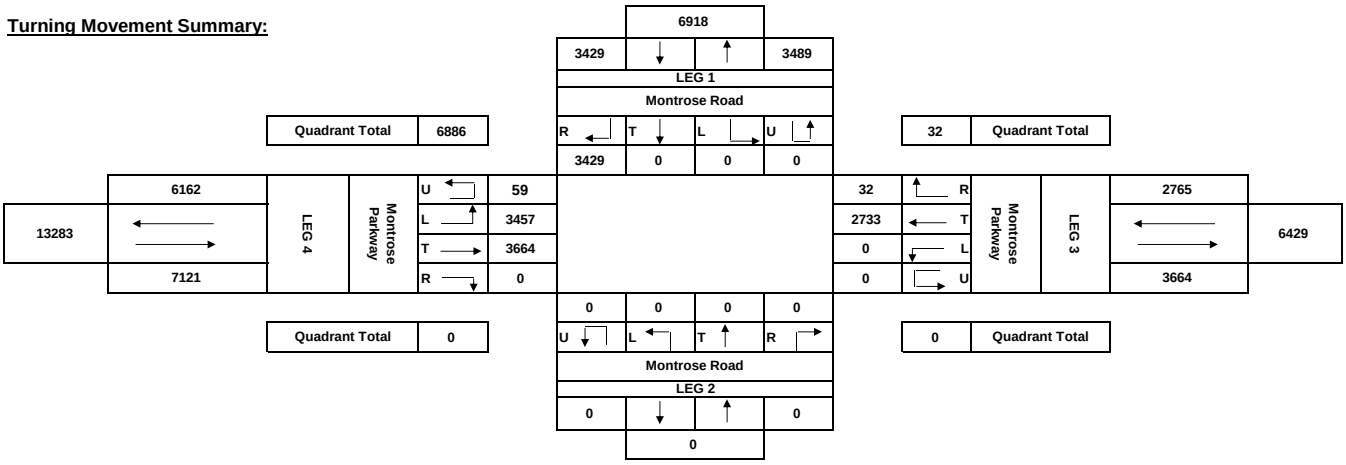

Comments:

AM Peak Hour :

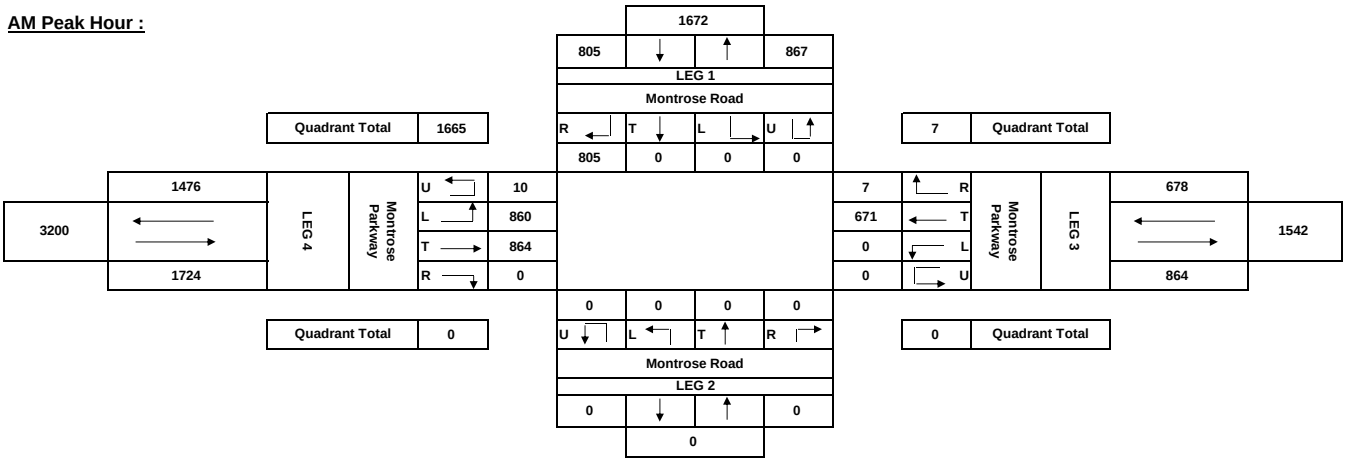

PM Peak Hour :

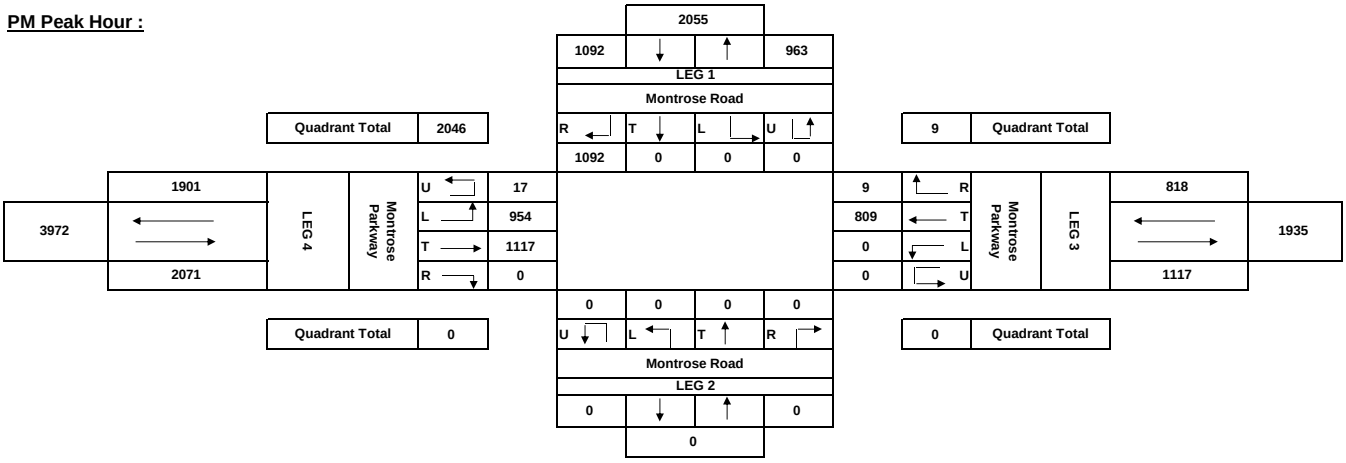

Maryland State Highway Administration
Highway Information Services Division
Turning Counts Study - Field Sheet

Request No.:
Job No.:

Location: Nicholson and Nebel
Date: 10/15/2011 Saturday
Recorder: AM
Interval (dd) : 15
(In Minutes)

County: Montgomery
Town: North Bethesda
Weather: Sunny

PEAK HOURS	AM PERIOD 6:00AM-12:00PM	Start	End	Volume	PM PERIOD 12:00PM-7:00PM	Start	End	Volume
		11:00	12:00	2089		12:00	13:00	0

Street Name-->	Nebel				Nebel				Nicholson				Nicholson				
HOUR	From North				From South				From East				From West				GRAND
ENDING	L	T	R	TOT	L	T	R	TOT	L	T	R	TOT	L	T	R	TOT	TOTAL
00:15				0				0				0				0	0
00:30				0				0				0				0	0
00:45				0				0				0				0	0
01:00				0				0				0				0	0
01:15				0				0				0				0	0
01:30				0				0				0				0	0
01:45				0				0				0				0	0
02:00				0				0				0				0	0
02:15				0				0				0				0	0
02:30				0				0				0				0	0
02:45				0				0				0				0	0
03:00				0				0				0				0	0
03:15				0				0				0				0	0
03:30				0				0				0				0	0
03:45				0				0				0				0	0
04:00				0				0				0				0	0
04:15				0				0				0				0	0
04:30				0				0				0				0	0
04:45				0				0				0				0	0
05:00				0				0				0				0	0
05:15				0				0				0				0	0
05:30				0				0				0				0	0
05:45				0				0				0				0	0
06:00				0				0				0				0	0
06:15				0				0				0				0	0
06:30				0				0				0				0	0
06:45				0				0				0				0	0
07:00				0				0				0				0	0
07:15				0				0				0				0	0
07:30				0				0				0				0	0
07:45				0				0				0				0	0
08:00				0				0				0				0	0
08:15				0				0				0				0	0
08:30				0				0				0				0	0
08:45				0				0				0				0	0
09:00				0				0				0				0	0
09:15				0				0				0				0	0
09:30				0				0				0				0	0
09:45				0				0				0				0	0
10:00				0				0				0				0	0
10:15	18	12	29	59	11	6	2	19	2	140	14	156	15	156	10	181	415
10:30	16	5	25	46	11	4	4	19	5	168	15	188	16	138	11	165	418
10:45	17	0	33	50	14	6	4	24	2	154	14	170	23	152	8	183	427
11:00	18	1	30	49	8	2	6	16	3	155	12	170	28	136	12	176	411
11:15	**23**	**6**	**35**	**64**	**15**	**9**	**3**	**27**	**3**	**196**	**20**	**219**	**28**	**165**	**16**	**209**	**519**
11:30	**20**	**6**	**32**	**58**	**17**	**8**	**6**	**31**	**6**	**188**	**21**	**215**	**26**	**160**	**12**	**198**	**502**
11:45	**22**	**5**	**29**	**56**	**17**	**8**	**4**	**29**	**9**	**188**	**29**	**226**	**29**	**158**	**10**	**197**	**508**
12:00	**33**	**4**	**36**	**73**	**12**	**7**	**4**	**23**	**5**	**187**	**29**	**221**	**19**	**209**	**15**	**243**	**560**
12:15	**26**	**4**	**32**	**62**	**16**	**8**	**10**	**34**	**5**	**205**	**33**	**243**	**32**	**199**	**14**	**245**	**584**
12:30	**27**	**5**	**42**	**74**	**12**	**8**	**7**	**27**	**5**	**170**	**55**	**230**	**28**	**212**	**15**	**255**	**586**
12:45	**28**	**13**	**44**	**85**	**14**	**8**	**11**	**33**	**4**	**175**	**36**	**215**	**27**	**198**	**16**	**241**	**574**
13:00	**21**	**6**	**40**	**67**	**19**	**1**	**6**	**26**	**9**	**197**	**34**	**240**	**35**	**181**	**13**	**229**	**562**
13:15	29	2	52	83	6	3	7	16	6	183	27	216	26	204	10	240	555
13:30	28	7	48	83	14	8	9	31	2	184	28	214	33	202	14	249	577
13:45	27	5	38	70	15	7	6	28	4	199	24	227	34	200	7	241	566
14:00	25	10	45	80	6	4	7	17	3	191	45	239	28	214	11	253	589
14:15				0				0				0				0	0
14:30				0				0				0				0	0
14:45				0				0				0				0	0
15:00				0				0				0				0	0
15:15				0				0				0				0	0
15:30				0				0				0				0	0
15:45				0				0				0				0	0
16:00				0				0				0				0	0
16:15				0				0				0				0	0
16:30				0				0				0				0	0
16:45				0				0				0				0	0
17:00				0				0				0				0	0
17:15				0				0				0				0	0
17:30				0				0				0				0	0
17:45				0				0				0				0	0
18:00				0				0				0				0	0
18:15				0				0				0				0	0
18:30				0				0				0				0	0
18:45				0				0				0				0	0
19:00				0				0				0				0	0
19:15				0				0				0				0	0
19:30				0				0				0				0	0
19:45				0				0				0				0	0
20:00				0				0				0				0	0
20:15				0				0				0				0	0
20:30				0				0				0				0	0
20:45				0				0				0				0	0
21:00				0				0				0				0	0
TOTAL	**378**	**91**	**590**	**1059**	**207**	**97**	**96**	**400**	**73**	**2880**	**436**	**3389**	**427**	**2884**	**194**	**3505**	**8353**
AM Peak Vol	98	21	132	251	61	32	17	110	23	759	99	881	102	692	53	847	2089
PM Peak Vol	102	28	158	288	61	25	34	120	23	747	158	928	122	790	58	970	2306

Maryland State Highway Administration
Highway Information Services Division
Turning Counts Study - Field Sheet

Request No.:
Job No.:

Location: Nicholson and Nebel
Date: 10/15/2011 Saturday
Recorder: AM
Interval (dd) : 15
(In Minutes)

County: Montgomery
Town: North Bethesda
Weather: Sunny

PEAK HOURS	AM PERIOD 6:00AM-12:00PM	Start	End	Volume	PM PERIOD 12:00PM-7:00PM	Start	End	Volume
		11:00	12:00	2089		12:00	13:00	0

PEDESTRIAN SCHOOL CHILDREN & U-TURN BREAKDOWN

Hour	Nebel			Nebel			Nicholson			Nicholson		
Ending	S.C.	PED.	U.T.	S.C.	PED.	U.T.	S.C.	PED.	U.T.	S.C.	PED.	U.T.
00:15												
00:30												
00:45												
01:00												
01:15												
01:30												
01:45												
02:00												
02:15												
02:30												
02:45												
03:00												
03:15												
03:30												
03:45												
04:00												
04:15												
04:30												
04:45												
05:00												
05:15												
05:30												
05:45												
06:00												
06:15												
06:30												
06:45												
07:00												
07:15												
07:30												
07:45												
08:00												
08:15												
08:30												
08:45												
09:00												
09:15												
09:30												
09:45												
10:00												
10:15												3
10:30												1
10:45												4
11:00												5
11:15												5
11:30												0
11:45												2
12:00												3
12:15												6
12:30												6
12:45												5
13:00												3
13:15												4
13:30												5
13:45												2
14:00												5
14:15												
14:30												
14:45												
15:00												
15:15												
15:30												
15:45												
16:00												
16:15												
16:30												
16:45												
17:00												
17:15												
17:30												
17:45												
18:00												
18:15												
18:30												
18:45												
19:00												
19:15												
19:30												
19:45												
20:00												
20:15												
20:30												
20:45												
21:00												
TOTAL	**0**	**0**	**0**	**0**	**0**	**0**	**0**	**0**	**0**	**0**	**0**	**59**
AM Peak Vol	0	0	0	0	0	0	0	0	0	0	0	10
PM Peak Vol	0	0	0	0	0	0	0	0	0	0	0	20

Maryland State Highway Administration
Highway Information Services Division
Turning Counts Study - Field Sheet

Request No.:
Job No.:

Location: Nicholson and Nebel
Date: 10/15/2011 Saturday
Recorder: AM
Interval (dd) : 15
(In Minutes)

County: Montgomery
Town: North Bethesda
Weather: Sunny

PEAK HOURS	AM PERIOD 6:00AM-12:00PM	Start	End	Volume	PM PERIOD 12:00PM-7:00PM	Start	End	Volume
		11:00	12:00	2089		12:00	13:00	0

Turning Movement Summary:

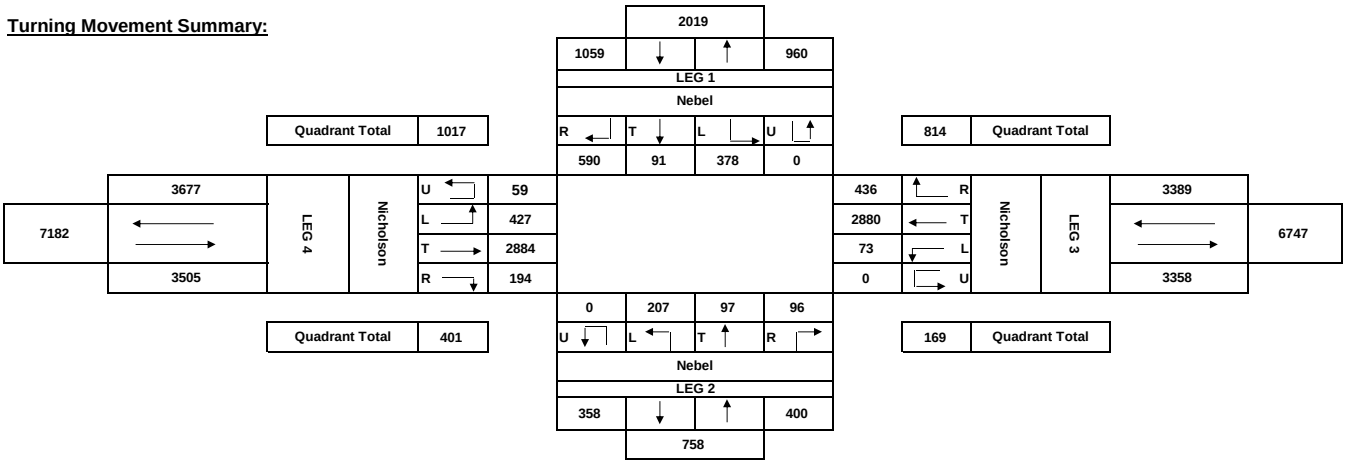

Comments:

AM Peak Hour :

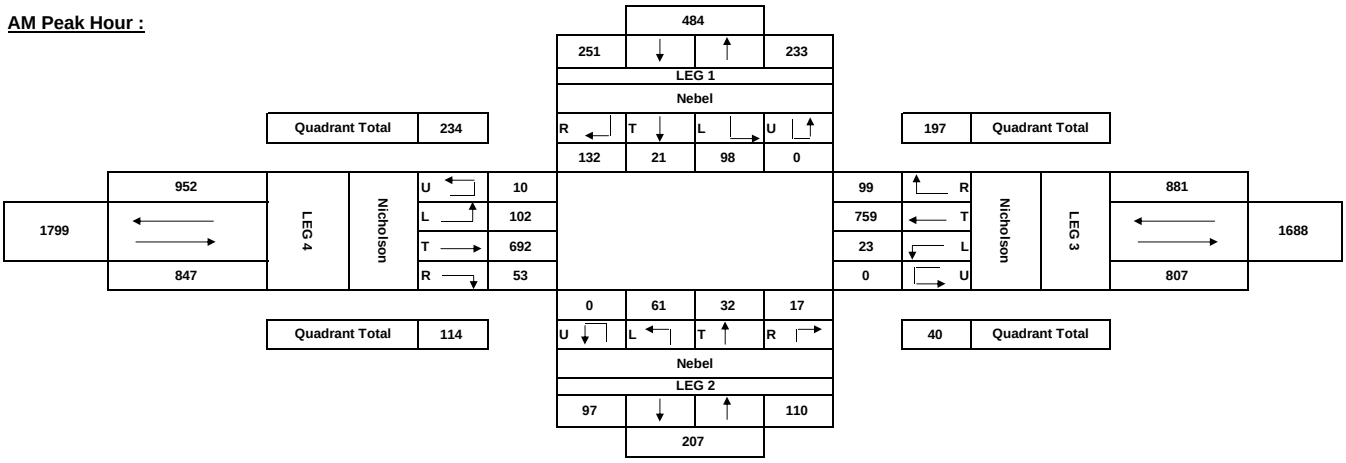

PM Peak Hour :

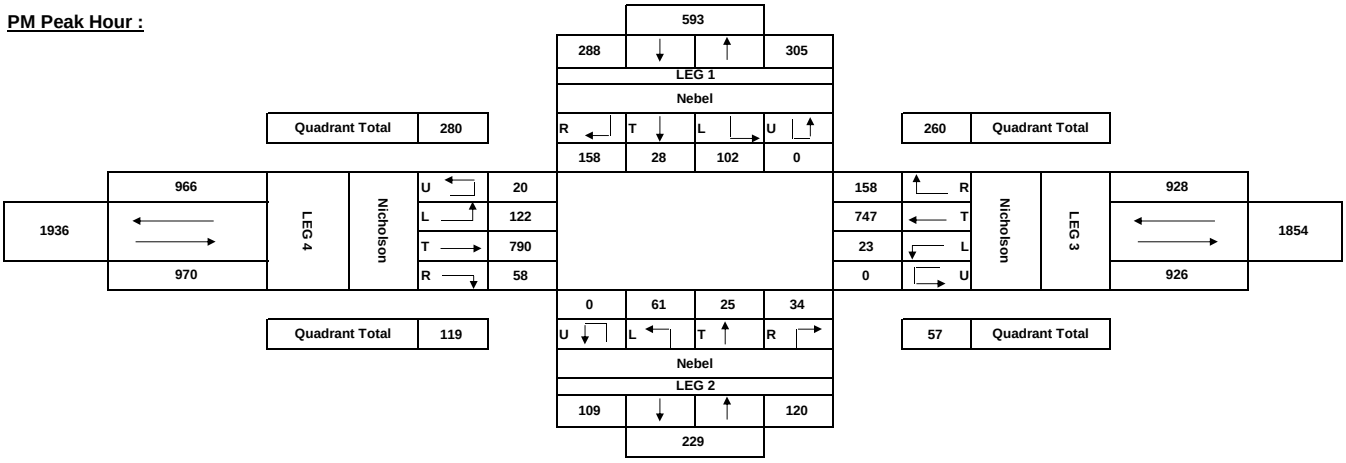

Maryland State Highway Administration
Highway Information Services Division
Turning Counts Study - Field Sheet

Request No.:
Job No.:

Location: Randolph Rd & Lauderdale Dr
Date: 1/1/2008 Tuesday
Recorder: BC
Interval (dd) : 15
(In Minutes)

County: Montgomery
Town: North Bethesda
Weather: Partly Cloudy

PEAK HOURS	AM PERIOD 6:00AM-12:00PM	Start 11:00	End 12:00	Volume 2387	PM PERIOD 12:00PM-7:00PM	Start 12:45	End 13:45	Volume 0

Street Name-->	Lauderdale Dr				Lauderdale Dr				Randolph Rd				Randolph Rd				
HOUR	From North				From South				From East				From West				GRAND
ENDING	L	T	R	TOT	L	T	R	TOT	L	T	R	TOT	L	T	R	TOT	TOTAL
00:15				0				0				0				0	0
00:30				0				0				0				0	0
00:45				0				0				0				0	0
01:00				0				0				0				0	0
01:15				0				0				0				0	0
01:30				0				0				0				0	0
01:45				0				0				0				0	0
02:00				0				0				0				0	0
02:15				0				0				0				0	0
02:30				0				0				0				0	0
02:45				0				0				0				0	0
03:00				0				0				0				0	0
03:15				0				0				0				0	0
03:30				0				0				0				0	0
03:45				0				0				0				0	0
04:00				0				0				0				0	0
04:15				0				0				0				0	0
04:30				0				0				0				0	0
04:45				0				0				0				0	0
05:00				0				0				0				0	0
05:15				0				0				0				0	0
05:30				0				0				0				0	0
05:45				0				0				0				0	0
06:00				0				0				0				0	0
06:15				0				0				0				0	0
06:30				0				0				0				0	0
06:45				0				0				0				0	0
07:00				0				0				0				0	0
07:15				0				0				0				0	0
07:30				0				0				0				0	0
07:45				0				0				0				0	0
08:00				0				0				0				0	0
08:15				0				0				0				0	0
08:30				0				0				0				0	0
08:45				0				0				0				0	0
09:00				0				0				0				0	0
09:15				0				0				0				0	0
09:30				0				0				0				0	0
09:45				0				0				0				0	0
10:00				0				0				0				0	0
10:15	0	0	3	3	14	0	10	24	6	234	1	241	6	171	34	211	479
10:30	0	1	0	1	15	0	10	25	4	274	0	278	4	194	29	227	531
10:45	3	0	10	13	17	0	6	23	9	304	1	314	3	163	20	186	536
11:00	0	0	0	0	17	0	12	29	11	282	0	293	2	203	29	234	556
11:15	**2**	**0**	**0**	**2**	**25**	**0**	**17**	**42**	**22**	**279**	**0**	**301**	**2**	**181**	**23**	**206**	**551**
11:30	**0**	**2**	**6**	**8**	**29**	**0**	**14**	**43**	**16**	**294**	**0**	**310**	**7**	**196**	**31**	**234**	**595**
11:45	**0**	**1**	**1**	**2**	**26**	**0**	**15**	**41**	**14**	**271**	**0**	**285**	**1**	**199**	**34**	**234**	**562**
12:00	**0**	**1**	**10**	**11**	**23**	**1**	**15**	**39**	**21**	**321**	**0**	**342**	**4**	**246**	**37**	**287**	**679**
12:15	0	0	4	4	37	0	12	49	17	277	22	316	2	193	40	235	604
12:30	0	1	3	4	32	1	16	49	14	292	5	311	6	252	48	306	670
12:45	0	1	8	9	28	1	15	44	21	325	3	349	2	233	34	269	671
13:00	**0**	**0**	**3**	**3**	**24**	**0**	**21**	**45**	**12**	**306**	**2**	**320**	**4**	**250**	**46**	**300**	**668**
13:15	**0**	**1**	**5**	**6**	**36**	**0**	**18**	**54**	**20**	**302**	**0**	**322**	**3**	**287**	**38**	**328**	**710**
13:30	**1**	**0**	**6**	**7**	**25**	**0**	**14**	**39**	**21**	**279**	**8**	**308**	**2**	**275**	**35**	**312**	**666**
13:45	**0**	**0**	**5**	**5**	**31**	**0**	**19**	**50**	**19**	**273**	**2**	**294**	**3**	**285**	**47**	**335**	**684**
14:00	0	0	6	6	25	1	10	36	17	254	1	272	1	287	36	324	638
14:15				0				0				0				0	0
14:30				0				0				0				0	0
14:45				0				0				0				0	0
15:00				0				0				0				0	0
15:15				0				0				0				0	0
15:30				0				0				0				0	0
15:45				0				0				0				0	0
16:00				0				0				0				0	0
16:15				0				0				0				0	0
16:30				0				0				0				0	0
16:45				0				0				0				0	0
17:00				0				0				0				0	0
17:15				0				0				0				0	0
17:30				0				0				0				0	0
17:45				0				0				0				0	0
18:00				0				0				0				0	0
18:15				0				0				0				0	0
18:30				0				0				0				0	0
18:45				0				0				0				0	0
19:00				0				0				0				0	0
19:15				0				0				0				0	0
19:30				0				0				0				0	0
19:45				0				0				0				0	0
20:00				0				0				0				0	0
20:15				0				0				0				0	0
20:30				0				0				0				0	0
20:45				0				0				0				0	0
21:00				0				0				0				0	0
21:15				0				0				0				0	0
21:30				0				0				0				0	0
21:45				0				0				0				0	0
22:00				0				0				0				0	0
22:15				0				0				0				0	0
22:30				0				0				0				0	0
22:45				0				0				0				0	0
23:00				0				0				0				0	0
23:15				0				0				0				0	0
23:30				0				0				0				0	0
23:45				0				0				0				0	0
00:00				0				0				0				0	0
TOTAL	**6**	**8**	**70**	**84**	**404**	**4**	**224**	**632**	**244**	**4567**	**45**	**4856**	**52**	**3615**	**561**	**4228**	**9800**
AM Peak Vol	2	4	17	23	103	1	61	165	73	1165	0	1238	14	822	125	961	2387
PM Peak Vol	1	1	19	21	116	0	72	188	72	1160	12	1244	12	1097	166	1275	2728

Maryland State Highway Administration
Highway Information Services Division
Turning Counts Study - Field Sheet

Request No.:
Job No.:

Location: Randolph Rd & Lauderdale Dr
Date: 1/1/2008 Tuesday
Recorder: BC
Interval (dd) : 15
(In Minutes)

County: Montgomery
Town: North Bethesda
Weather: Partly Cloudy

PEAK HOURS	AM PERIOD 6:00AM-12:00PM	Start	End	Volume	PM PERIOD 12:00PM-7:00PM	Start	End	Volume
		11:00	12:00	2387		12:45	13:45	0

PEDESTRIAN SCHOOL CHILDREN & U-TURN BREAKDOWN

Hour Ending	Lauderdale Dr S.C.	Lauderdale Dr PED.	Lauderdale Dr U.T.	Lauderdale Dr S.C.	Lauderdale Dr PED.	Lauderdale Dr U.T.	Randolph Rd S.C.	Randolph Rd PED.	Randolph Rd U.T.	Randolph Rd S.C.	Randolph Rd PED.	Randolph Rd U.T.
00:15												
00:30												
00:45												
01:00												
01:15												
01:30												
01:45												
02:00												
02:15												
02:30												
02:45												
03:00												
03:15												
03:30												
03:45												
04:00												
04:15												
04:30												
04:45												
05:00												
05:15												
05:30												
05:45												
06:00												
06:15												
06:30												
06:45												
07:00												
07:15												
07:30												
07:45												
08:00												
08:15												
08:30												
08:45												
09:00												
09:15												
09:30												
09:45												
10:00												
10:15												5
10:30												0
10:45												1
11:00												2
11:15												4
11:30												2
11:45												3
12:00												3
12:15												8
12:30												5
12:45												3
13:00												4
13:15												5
13:30												0
13:45												0
14:00												1
14:15												
14:30												
14:45												
15:00												
15:15												
15:30												
15:45												
16:00												
16:15												
16:30												
16:45												
17:00												
17:15												
17:30												
17:45												
18:00												
18:15												
18:30												
18:45												
19:00												
19:15												
19:30												
19:45												
20:00												
20:15												
20:30												
20:45												
21:00												
TOTAL	**0**	**0**	**0**	**0**	**0**	**0**	**0**	**0**	**0**	**0**	**0**	**46**
AM Peak Vol	0	0	0	0	0	0	0	0	0	0	0	12
PM Peak Vol	0	0	0	0	0	0	0	0	0	0	0	9

Maryland State Highway Administration
Highway Information Services Division
Turning Counts Study - Field Sheet

Request No.:
Job No.:

Location: Randolph Rd & Lauderdale Dr
Date: 1/1/2008 Tuesday
Recorder: BC
Interval (dd) : 15
(In Minutes)

County: Montgomery
Town: North Bethesda
Weather: Partly Cloudy

PEAK HOURS	AM PERIOD 6:00AM-12:00PM	Start	End	Volume	PM PERIOD 12:00PM-7:00PM	Start	End	Volume
		11:00	12:00	2387		12:45	13:45	0

Turning Movement Summary:

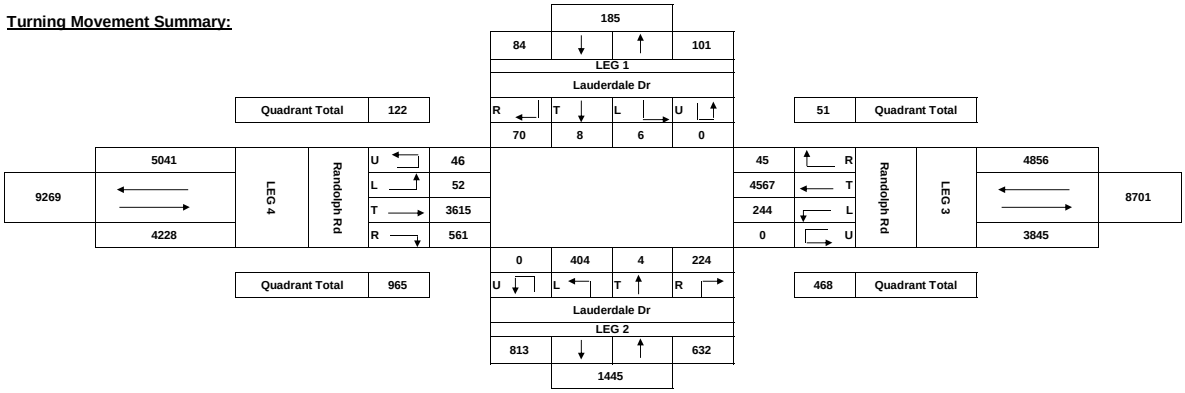

Comments:

AM Peak Hour :

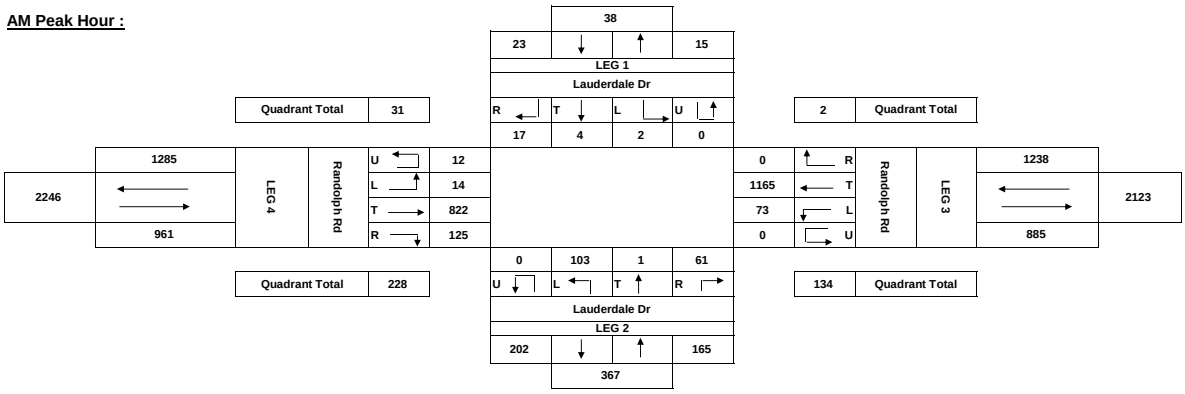

PM Peak Hour :

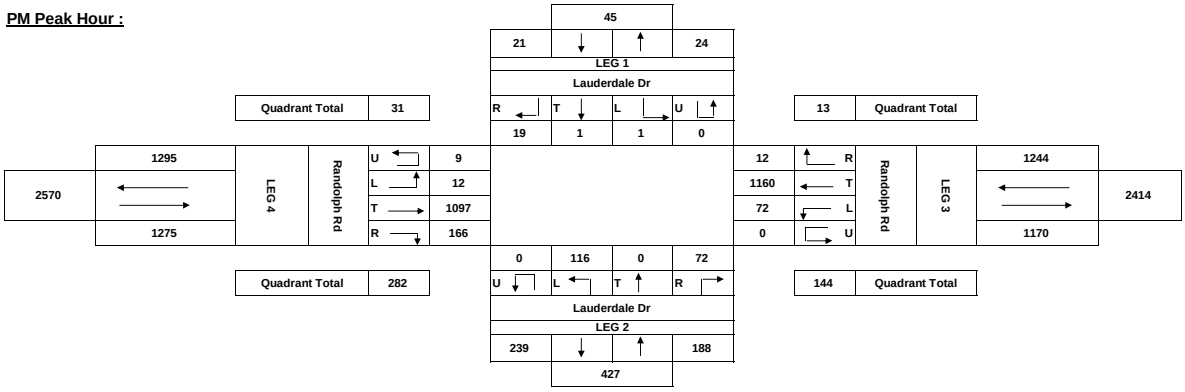

Maryland State Highway Administration
Highway Information Services Division
Turning Counts Study - Field Sheet

Request No.:
Job No.:

Location: Randolph and Parklawn
Date: 10/15/2011 Saturday
Recorder: AM
Interval (dd) : 15
(In Minutes)

County: Montgomery
Town: North Bethesda
Weather: Sunny

PEAK HOURS	AM PERIOD 6:00AM-12:00PM	Start	End	Volume	PM PERIOD 12:00PM-7:00PM	Start	End	Volume
		11:00	12:00	2551		13:00	14:00	0

Street Name-->	Parklawn				Parklawn				Randolph				Randolph				
HOUR	From North				From South				From East				From West				GRAND
ENDING	L	T	R	TOT	L	T	R	TOT	L	T	R	TOT	L	T	R	TOT	TOTAL
00:15				0				0				0				0	0
00:30				0				0				0				0	0
00:45				0				0				0				0	0
01:00				0				0				0				0	0
01:15				0				0				0				0	0
01:30				0				0				0				0	0
01:45				0				0				0				0	0
02:00				0				0				0				0	0
02:15				0				0				0				0	0
02:30				0				0				0				0	0
02:45				0				0				0				0	0
03:00				0				0				0				0	0
03:15				0				0				0				0	0
03:30				0				0				0				0	0
03:45				0				0				0				0	0
04:00				0				0				0				0	0
04:15				0				0				0				0	0
04:30				0				0				0				0	0
04:45				0				0				0				0	0
05:00				0				0				0				0	0
05:15				0				0				0				0	0
05:30				0				0				0				0	0
05:45				0				0				0				0	0
06:00				0				0				0				0	0
06:15				0				0				0				0	0
06:30				0				0				0				0	0
06:45				0				0				0				0	0
07:00				0				0				0				0	0
07:15				0				0				0				0	0
07:30				0				0				0				0	0
07:45				0				0				0				0	0
08:00				0				0				0				0	0
08:15				0				0				0				0	0
08:30				0				0				0				0	0
08:45				0				0				0				0	0
09:00				0				0				0				0	0
09:15				0				0				0				0	0
09:30				0				0				0				0	0
09:45				0				0				0				0	0
10:00				0				0				0				0	0
10:15	19	45	20	84	28	35	3	66	0	160	37	197	33	96	33	162	509
10:30	33	40	20	93	42	35	1	78	0	178	30	208	23	104	55	182	561
10:45	28	61	43	132	27	37	1	65	0	142	25	167	35	110	42	187	551
11:00	20	40	35	95	35	37	0	72	0	175	32	207	22	124	47	193	567
11:15	**30**	**38**	**33**	**101**	**40**	**45**	**2**	**87**	**0**	**185**	**31**	**216**	**30**	**91**	**39**	**160**	**564**
11:30	**23**	**44**	**44**	**111**	**52**	**53**	**1**	**106**	**0**	**191**	**47**	**238**	**44**	**140**	**46**	**230**	**685**
11:45	**39**	**57**	**33**	**129**	**24**	**42**	**0**	**66**	**0**	**177**	**44**	**221**	**32**	**142**	**39**	**213**	**629**
12:00	**33**	**55**	**34**	**122**	**42**	**54**	**4**	**100**	**0**	**194**	**53**	**247**	**53**	**103**	**48**	**204**	**673**
12:15	48	66	38	152	33	48	3	84	0	187	50	237	32	169	61	262	735
12:30	38	44	46	128	44	53	4	101	0	162	39	201	48	159	52	259	689
12:45	28	56	24	108	32	45	0	77	0	190	44	234	37	142	41	220	639
13:00	29	48	28	105	34	39	3	76	0	220	50	270	44	183	41	268	719
13:15	**46**	**68**	**27**	**141**	**41**	**43**	**0**	**84**	**0**	**182**	**36**	**218**	**22**	**172**	**36**	**230**	**673**
13:30	**36**	**47**	**33**	**116**	**48**	**60**	**1**	**109**	**0**	**194**	**38**	**232**	**34**	**183**	**54**	**271**	**728**
13:45	**29**	**65**	**26**	**120**	**39**	**40**	**2**	**81**	**0**	**163**	**42**	**205**	**17**	**156**	**55**	**228**	**634**
14:00	**41**	**48**	**27**	**116**	**58**	**59**	**3**	**120**	**0**	**187**	**46**	**233**	**40**	**228**	**56**	**324**	**793**
14:15				0				0				0				0	0
14:30				0				0				0				0	0
14:45				0				0				0				0	0
15:00				0				0				0				0	0
15:15				0				0				0				0	0
15:30				0				0				0				0	0
15:45				0				0				0				0	0
16:00				0				0				0				0	0
16:15				0				0				0				0	0
16:30				0				0				0				0	0
16:45				0				0				0				0	0
17:00				0				0				0				0	0
17:15				0				0				0				0	0
17:30				0				0				0				0	0
17:45				0				0				0				0	0
18:00				0				0				0				0	0
18:15				0				0				0				0	0
18:30				0				0				0				0	0
18:45				0				0				0				0	0
19:00				0				0				0				0	0
19:15				0				0				0				0	0
19:30				0				0				0				0	0
19:45				0				0				0				0	0
20:00				0				0				0				0	0
20:15				0				0				0				0	0
20:30				0				0				0				0	0
20:45				0				0				0				0	0
21:00				0				0				0				0	0
TOTAL	**520**	**822**	**511**	**1853**	**619**	**725**	**28**	**1372**	**0**	**2887**	**644**	**3531**	**546**	**2302**	**745**	**3593**	**10349**
AM Peak Vol	125	194	144	463	158	194	7	359	0	747	175	922	159	476	172	807	2551
PM Peak Vol	152	228	113	493	186	202	6	394	0	726	162	888	113	739	201	1053	2828

Maryland State Highway Administration
Highway Information Services Division
Turning Counts Study - Field Sheet

Request No.:
Job No.:

Location: Randolph and Parklawn
Date: 10/15/2011 Saturday
Recorder: AM
Interval (dd) : 15
(In Minutes)

County: Montgomery
Town: North Bethesda
Weather: Sunny

PEAK HOURS	AM PERIOD 6:00AM-12:00PM	Start	End	Volume	PM PERIOD 12:00PM-7:00PM	Start	End	Volume
		11:00	12:00	2551		13:00	14:00	0

PEDESTRIAN SCHOOL CHILDREN & U-TURN BREAKDOWN

Hour	Parklawn			Parklawn			Randolph			Randolph		
Ending	S.C.	PED.	U.T.	S.C.	PED.	U.T.	S.C.	PED.	U.T.	S.C.	PED.	U.T.
00:15												
00:30												
00:45												
01:00												
01:15												
01:30												
01:45												
02:00												
02:15												
02:30												
02:45												
03:00												
03:15												
03:30												
03:45												
04:00												
04:15												
04:30												
04:45												
05:00												
05:15												
05:30												
05:45												
06:00												
06:15												
06:30												
06:45												
07:00												
07:15												
07:30												
07:45												
08:00												
08:15												
08:30												
08:45												
09:00												
09:15												
09:30												
09:45												
10:00												
10:15												3
10:30												1
10:45												4
11:00												5
11:15												5
11:30												0
11:45												2
12:00												3
12:15												6
12:30												6
12:45												5
13:00												3
13:15												4
13:30												5
13:45												2
14:00												5
14:15												
14:30												
14:45												
15:00												
15:15												
15:30												
15:45												
16:00												
16:15												
16:30												
16:45												
17:00												
17:15												
17:30												
17:45												
18:00												
18:15												
18:30												
18:45												
19:00												
19:15												
19:30												
19:45												
20:00												
20:15												
20:30												
20:45												
21:00												
TOTAL	**0**	**0**	**0**	**0**	**0**	**0**	**0**	**0**	**0**	**0**	**0**	**59**
AM Peak Vol	0	0	0	0	0	0	0	0	0	0	0	10
PM Peak Vol	0	0	0	0	0	0	0	0	0	0	0	16

Maryland State Highway Administration
Highway Information Services Division
Turning Counts Study - Field Sheet

Request No.:
Job No.:

Location: Randolph and Parklawn
Date: 10/15/2011 Saturday
Recorder: AM
Interval (dd) : 15
(In Minutes)

County: Montgomery
Town: North Bethesda
Weather: Sunny

PEAK HOURS	AM PERIOD 6:00AM-12:00PM	Start	End	Volume	PM PERIOD 12:00PM-7:00PM	Start	End	Volume
		11:00	12:00	2551		13:00	14:00	0

Turning Movement Summary:

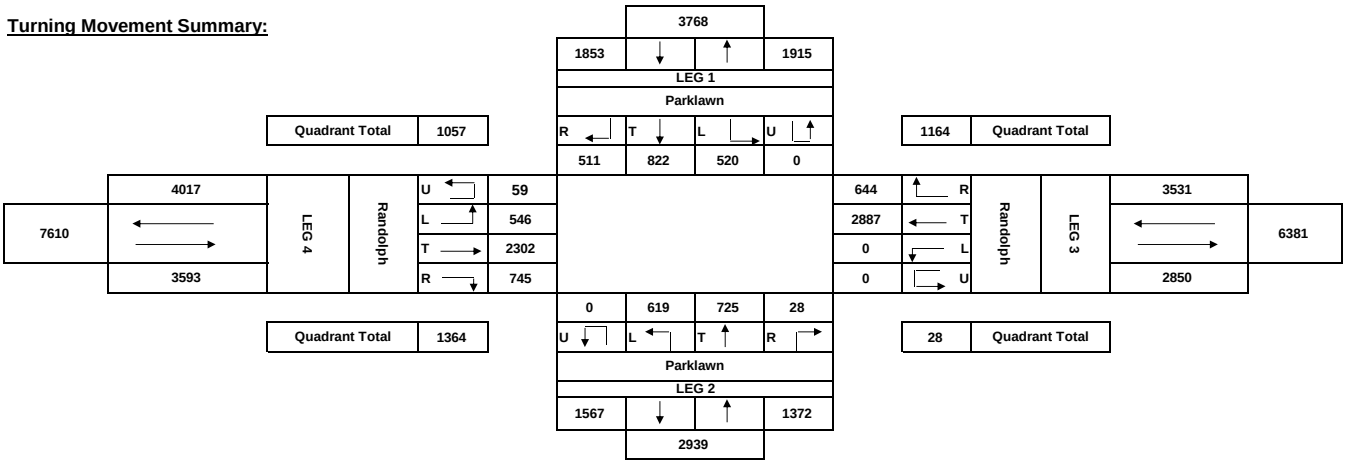

Comments:

AM Peak Hour :

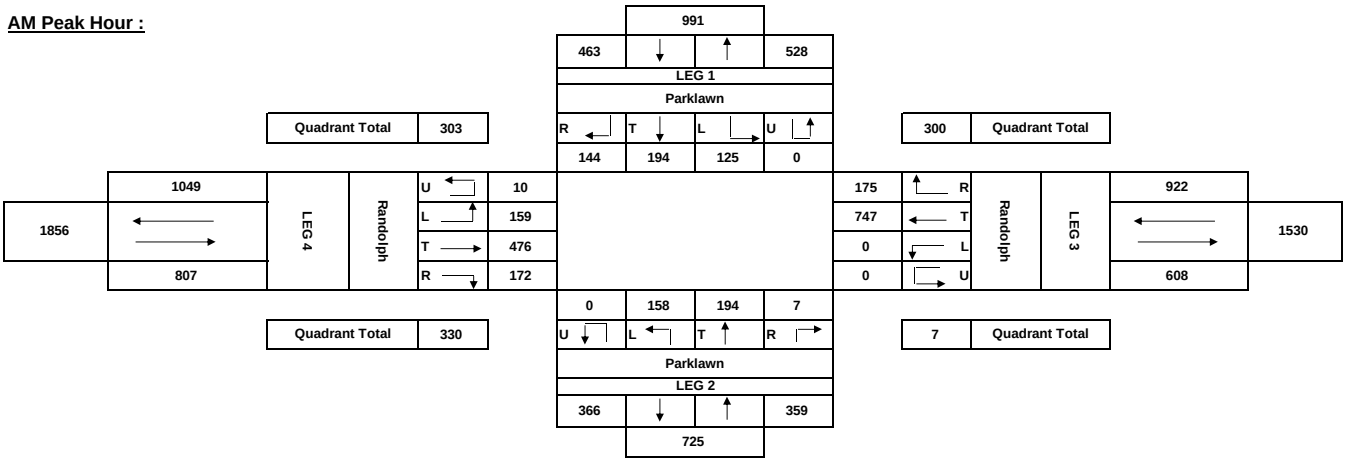

PM Peak Hour :

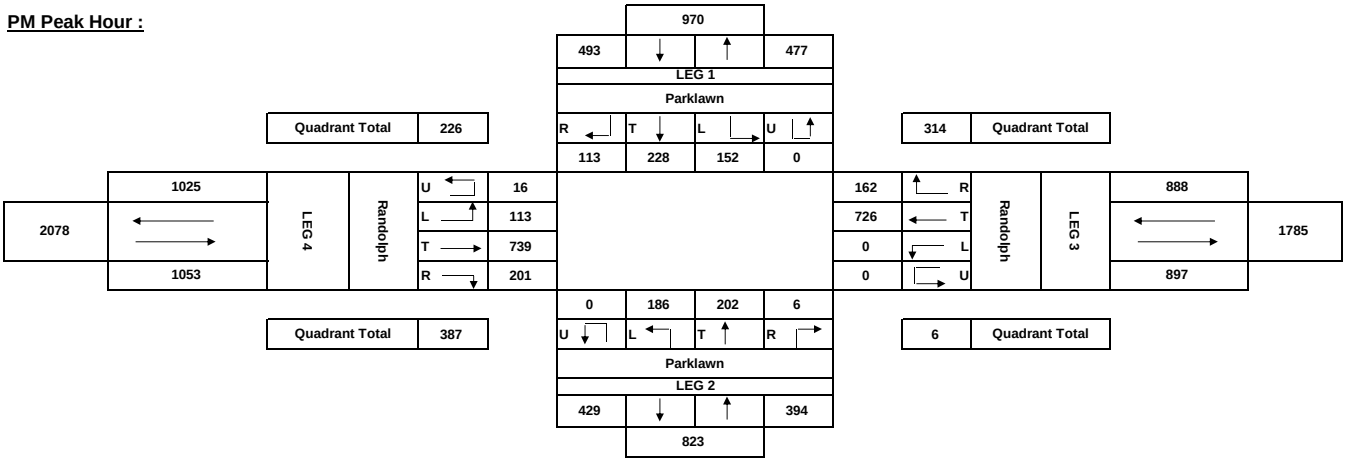

Maryland State Highway Administration
Highway Information Services Division
Turning Counts Study - Field Sheet

Request No.:
Job No.:

Location: Randolph and Parklawn (2)
Date: 10/22/2011 Saturday
Recorder: AM
Interval (dd) : 15
(In Minutes)

County: Montgomery
Town: North Bethesda
Weather: Sunny

PEAK HOURS	AM PERIOD 6:00AM-12:00PM	Start	End	Volume	PM PERIOD 12:00PM-7:00PM	Start	End	Volume
		11:00	12:00	1315		12:15	13:15	0

Street Name-->	Parklawn				Parklawn				Randolph				Randolph				
HOUR	From North				From South				From East				From West				GRAND
ENDING	L	T	R	TOT	L	T	R	TOT	L	T	R	TOT	L	T	R	TOT	TOTAL
00:15				0				0				0				0	0
00:30				0				0				0				0	0
00:45				0				0				0				0	0
01:00				0				0				0				0	0
01:15				0				0				0				0	0
01:30				0				0				0				0	0
01:45				0				0				0				0	0
02:00				0				0				0				0	0
02:15				0				0				0				0	0
02:30				0				0				0				0	0
02:45				0				0				0				0	0
03:00				0				0				0				0	0
03:15				0				0				0				0	0
03:30				0				0				0				0	0
03:45				0				0				0				0	0
04:00				0				0				0				0	0
04:15				0				0				0				0	0
04:30				0				0				0				0	0
04:45				0				0				0				0	0
05:00				0				0				0				0	0
05:15				0				0				0				0	0
05:30				0				0				0				0	0
05:45				0				0				0				0	0
06:00				0				0				0				0	0
06:15				0				0				0				0	0
06:30				0				0				0				0	0
06:45				0				0				0				0	0
07:00				0				0				0				0	0
07:15				0				0				0				0	0
07:30				0				0				0				0	0
07:45				0				0				0				0	0
08:00				0				0				0				0	0
08:15				0				0				0				0	0
08:30				0				0				0				0	0
08:45				0				0				0				0	0
09:00				0				0				0				0	0
09:15				0				0				0				0	0
09:30				0				0				0				0	0
09:45				0				0				0				0	0
10:00				0				0				0				0	0
10:15				0		88		88		62		62		117		117	267
10:30				0		94		94		88		88		132		132	314
10:45				0		55		55		153		153		136		136	344
11:00				0		94		94		95		95		151		151	340
11:15				**0**		**83**		**83**		**88**		**88**		**123**		**123**	**294**
11:30				**0**		**74**		**74**		**94**		**94**		**158**		**158**	**326**
11:45				**0**		**58**		**58**		**82**		**82**		**177**		**177**	**317**
12:00				**0**		**135**		**135**		**98**		**98**		**145**		**145**	**378**
12:15				0		44		44		81		81		220		220	345
12:30				**0**		**100**		**100**		**128**		**128**		**197**		**197**	**425**
12:45				**0**		**94**		**94**		**132**		**132**		**172**		**172**	**398**
13:00				**0**		**80**		**80**		**66**		**66**		**201**		**201**	**347**
13:15				**0**		**101**		**101**		**131**		**131**		**198**		**198**	**430**
13:30				0		86		86		81		81		204		204	371
13:45				0		138		138		98		98		187		187	423
14:00				0		55		55		58		58		258		258	371
14:15				0				0				0				0	0
14:30				0				0				0				0	0
14:45				0				0				0				0	0
15:00				0				0				0				0	0
15:15				0				0				0				0	0
15:30				0				0				0				0	0
15:45				0				0				0				0	0
16:00				0				0				0				0	0
16:15				0				0				0				0	0
16:30				0				0				0				0	0
16:45				0				0				0				0	0
17:00				0				0				0				0	0
17:15				0				0				0				0	0
17:30				0				0				0				0	0
17:45				0				0				0				0	0
18:00				0				0				0				0	0
18:15				0				0				0				0	0
18:30				0				0				0				0	0
18:45				0				0				0				0	0
19:00				0				0				0				0	0
19:15				0				0				0				0	0
19:30				0				0				0				0	0
19:45				0				0				0				0	0
20:00				0				0				0				0	0
20:15				0				0				0				0	0
20:30				0				0				0				0	0
20:45				0				0				0				0	0
21:00				0				0				0				0	0
TOTAL	**0**	**0**	**0**	**0**	**0**	**1379**	**0**	**1379**	**0**	**1535**	**0**	**1535**	**0**	**2776**	**0**	**2776**	**5690**
AM Peak Vol	0	0	0	0	0	350	0	350	0	362	0	362	0	603	0	603	1315
PM Peak Vol	0	0	0	0	0	375	0	375	0	457	0	457	0	768	0	768	1600

Maryland State Highway Administration
Highway Information Services Division
Turning Counts Study - Field Sheet

Request No.:
Job No.:

Location: Randolph and Parklawn (2)
Date: 10/22/2011 Saturday
Recorder: AM
Interval (dd) : 15
(In Minutes)

County: Montgomery
Town: North Bethesda
Weather: Sunny

PEAK HOURS	AM PERIOD 6:00AM-12:00PM	Start	End	Volume	PM PERIOD 12:00PM-7:00PM	Start	End	Volume
		11:00	12:00	1315		12:15	13:15	0

PEDESTRIAN SCHOOL CHILDREN & U-TURN BREAKDOWN

Hour	Parklawn			Parklawn			Randolph			Randolph		
Ending	S.C.	PED.	U.T.	S.C.	PED.	U.T.	S.C.	PED.	U.T.	S.C.	PED.	U.T.
00:15												
00:30												
00:45												
01:00												
01:15												
01:30												
01:45												
02:00												
02:15												
02:30												
02:45												
03:00												
03:15												
03:30												
03:45												
04:00												
04:15												
04:30												
04:45												
05:00												
05:15												
05:30												
05:45												
06:00												
06:15												
06:30												
06:45												
07:00												
07:15												
07:30												
07:45												
08:00												
08:15												
08:30												
08:45												
09:00												
09:15												
09:30												
09:45												
10:00												
10:15												3
10:30												1
10:45												4
11:00												5
11:15												5
11:30												0
11:45												2
12:00												3
12:15												6
12:30												6
12:45												5
13:00												3
13:15												4
13:30												5
13:45												2
14:00												5
14:15												
14:30												
14:45												
15:00												
15:15												
15:30												
15:45												
16:00												
16:15												
16:30												
16:45												
17:00												
17:15												
17:30												
17:45												
18:00												
18:15												
18:30												
18:45												
19:00												
19:15												
19:30												
19:45												
20:00												
20:15												
20:30												
20:45												
21:00												
TOTAL	**0**	**0**	**0**	**0**	**0**	**0**	**0**	**0**	**0**	**0**	**0**	**59**
AM Peak Vol	0	0	0	0	0	0	0	0	0	0	0	10
PM Peak Vol	0	0	0	0	0	0	0	0	0	0	0	18

Maryland State Highway Administration
Highway Information Services Division
Turning Counts Study - Field Sheet

Request No.:
Job No.:

Location: Randolph and Parklawn (2)
Date: 10/22/2011 Saturday
Recorder: AM
Interval (dd) : 15
(In Minutes)

County: Montgomery
Town: North Bethesda
Weather: Sunny

PEAK HOURS	AM PERIOD 6:00AM-12:00PM	Start	End	Volume	PM PERIOD 12:00PM-7:00PM	Start	End	Volume
		11:00	12:00	1315		12:15	13:15	0

Turning Movement Summary:

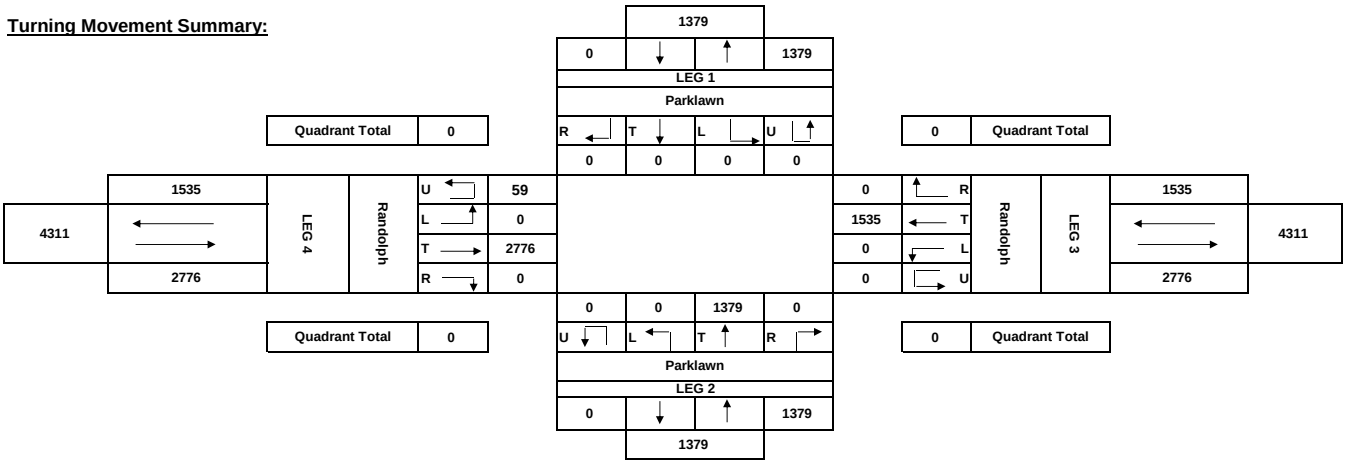

Comments:

AM Peak Hour :

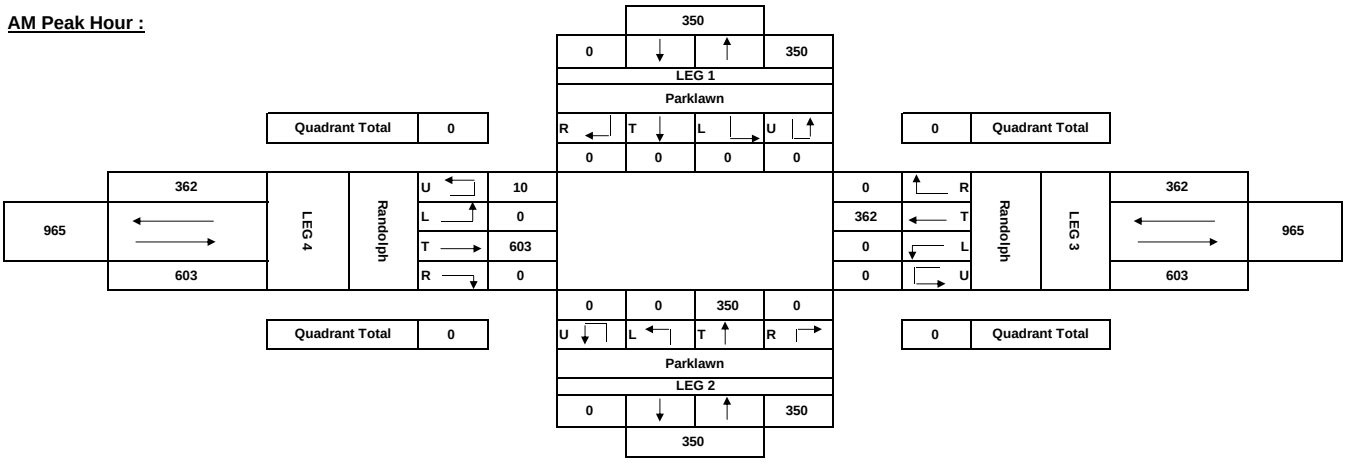

PM Peak Hour :

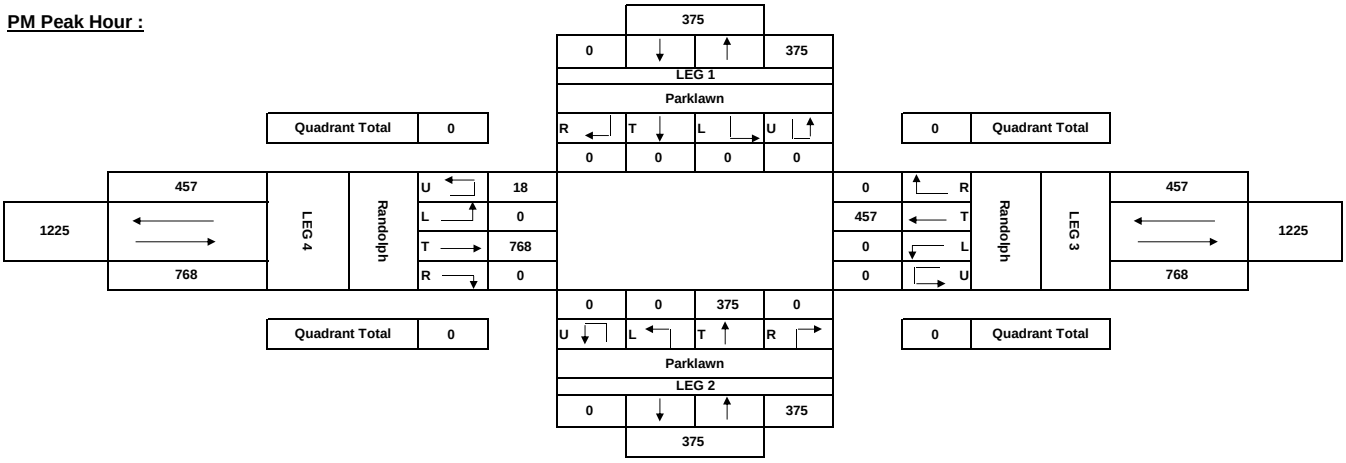

Maryland State Highway Administration
Highway Information Services Division
Turning Counts Study - Field Sheet

Request No.:
Job No.:

Location: Randolph and Nebel
Date: 10/8/2011 Saturday
Recorder: AM
Interval (dd) : 15
(In Minutes)

County: Montgomery
Town: North Bethesda
Weather: Sunny

PEAK HOURS	AM PERIOD 6:00AM-12:00PM	Start	End	Volume	PM PERIOD 12:00PM-7:00PM	Start	End	Volume
		11:00	12:00	2178		13:00	14:00	0

Street Name-->					Nebel				Randolph				Randolph				
HOUR	From North				From South				From East				From West				GRAND
ENDING	L	T	R	TOT	L	T	R	TOT	L	T	R	TOT	L	T	R	TOT	TOTAL
00:15				0				0				0				0	0
00:30				0				0				0				0	0
00:45				0				0				0				0	0
01:00				0				0				0				0	0
01:15				0				0				0				0	0
01:30				0				0				0				0	0
01:45				0				0				0				0	0
02:00				0				0				0				0	0
02:15				0				0				0				0	0
02:30				0				0				0				0	0
02:45				0				0				0				0	0
03:00				0				0				0				0	0
03:15				0				0				0				0	0
03:30				0				0				0				0	0
03:45				0				0				0				0	0
04:00				0				0				0				0	0
04:15				0				0				0				0	0
04:30				0				0				0				0	0
04:45				0				0				0				0	0
05:00				0				0				0				0	0
05:15				0				0				0				0	0
05:30				0				0				0				0	0
05:45				0				0				0				0	0
06:00				0				0				0				0	0
06:15				0				0				0				0	0
06:30				0				0				0				0	0
06:45				0				0				0				0	0
07:00				0				0				0				0	0
07:15				0				0				0				0	0
07:30				0				0				0				0	0
07:45				0				0				0				0	0
08:00				0				0				0				0	0
08:15				0				0				0				0	0
08:30				0				0				0				0	0
08:45				0				0				0				0	0
09:00				0				0				0				0	0
09:15				0				0				0				0	0
09:30				0				0				0				0	0
09:45				0				0				0				0	0
10:00				0				0				0				0	0
10:15	0	0	0	0	38	0	36	74	54	172	0	226	0	140	30	170	470
10:30	0	0	0	0	34	0	33	67	48	204	0	252	0	148	46	194	513
10:45	0	0	0	0	44	0	30	74	39	192	0	231	0	137	44	181	486
11:00	0	0	0	0	40	0	44	84	42	178	0	220	0	160	39	199	503
11:15	**0**	**0**	**0**	**0**	**53**	**0**	**51**	**104**	**45**	**198**	**0**	**243**	**0**	**142**	**42**	**184**	**531**
11:30	**0**	**0**	**0**	**0**	**28**	**0**	**53**	**81**	**50**	**183**	**0**	**233**	**0**	**154**	**52**	**206**	**520**
11:45	**0**	**0**	**0**	**0**	**35**	**0**	**37**	**72**	**55**	**218**	**0**	**273**	**0**	**161**	**65**	**226**	**571**
12:00	**0**	**0**	**0**	**0**	**52**	**0**	**45**	**97**	**45**	**214**	**0**	**259**	**0**	**156**	**44**	**200**	**556**
12:15	0	0	0	0	51	0	56	107	63	172	0	235	0	154	55	209	551
12:30	0	0	0	0	44	0	44	88	49	205	0	254	0	149	62	211	553
12:45	0	0	0	0	54	0	49	103	48	199	0	247	0	166	43	209	559
13:00	0	0	0	0	46	0	52	98	50	210	0	260	0	218	52	270	628
13:15	**0**	**0**	**0**	**0**	**49**	**0**	**47**	**96**	**63**	**187**	**0**	**250**	**0**	**147**	**56**	**203**	**549**
13:30	**0**	**0**	**0**	**0**	**51**	**0**	**43**	**94**	**46**	**190**	**0**	**236**	**0**	**178**	**59**	**237**	**567**
13:45	**0**	**0**	**0**	**0**	**57**	**0**	**63**	**120**	**49**	**201**	**0**	**250**	**0**	**178**	**61**	**239**	**609**
14:00	**0**	**0**	**0**	**0**	**60**	**0**	**53**	**113**	**39**	**209**	**0**	**248**	**0**	**238**	**56**	**294**	**655**
14:15				0				0				0				0	0
14:30				0				0				0				0	0
14:45				0				0				0				0	0
15:00				0				0				0				0	0
15:15				0				0				0				0	0
15:30				0				0				0				0	0
15:45				0				0				0				0	0
16:00				0				0				0				0	0
16:15				0				0				0				0	0
16:30				0				0				0				0	0
16:45				0				0				0				0	0
17:00				0				0				0				0	0
17:15				0				0				0				0	0
17:30				0				0				0				0	0
17:45				0				0				0				0	0
18:00				0				0				0				0	0
18:15				0				0				0				0	0
18:30				0				0				0				0	0
18:45				0				0				0				0	0
19:00				0				0				0				0	0
19:15				0				0				0				0	0
19:30				0				0				0				0	0
19:45				0				0				0				0	0
20:00				0				0				0				0	0
20:15				0				0				0				0	0
20:30				0				0				0				0	0
20:45				0				0				0				0	0
21:00				0				0				0				0	0
TOTAL	**0**	**0**	**0**	**0**	**736**	**0**	**736**	**1472**	**785**	**3132**	**0**	**3917**	**0**	**2626**	**806**	**3432**	**8821**
AM Peak Vol	0	0	0	0	168	0	186	354	195	813	0	1008	0	613	203	816	2178
PM Peak Vol	0	0	0	0	217	0	206	423	197	787	0	984	0	741	232	973	2380

Maryland State Highway Administration
Highway Information Services Division
Turning Counts Study - Field Sheet

Request No.:
Job No.:

Location: Randolph and Nebel
Date: 10/8/2011 Saturday
Recorder: AM
Interval (dd) : 15
(In Minutes)

County: Montgomery
Town: North Bethesda
Weather: Sunny

PEAK HOURS	AM PERIOD 6:00AM-12:00PM	Start	End	Volume	PM PERIOD 12:00PM-7:00PM	Start	End	Volume
		11:00	12:00	2178		13:00	14:00	0

PEDESTRIAN SCHOOL CHILDREN & U-TURN BREAKDOWN

Hour	0			Nebel			Randolph			Randolph		
Ending	S.C.	PED.	U.T.	S.C.	PED.	U.T.	S.C.	PED.	U.T.	S.C.	PED.	U.T.
00:15												
00:30												
00:45												
01:00												
01:15												
01:30												
01:45												
02:00												
02:15												
02:30												
02:45												
03:00												
03:15												
03:30												
03:45												
04:00												
04:15												
04:30												
04:45												
05:00												
05:15												
05:30												
05:45												
06:00												
06:15												
06:30												
06:45												
07:00												
07:15												
07:30												
07:45												
08:00												
08:15												
08:30												
08:45												
09:00												
09:15												
09:30												
09:45												
10:00												
10:15												
10:30												
10:45												
11:00												
11:15												
11:30												
11:45												
12:00												
12:15												
12:30												
12:45												
13:00												
13:15												
13:30												
13:45												
14:00												
14:15												
14:30												
14:45												
15:00												
15:15												
15:30												
15:45												
16:00												
16:15												
16:30												
16:45												
17:00												
17:15												
17:30												
17:45												
18:00												
18:15												
18:30												
18:45												
19:00												
19:15												
19:30												
19:45												
20:00												
20:15												
20:30												
20:45												
21:00												
TOTAL	**0**	**0**	**0**	**0**	**0**	**0**	**0**	**0**	**0**	**0**	**0**	**0**
AM Peak Vol	0	0	0	0	0	0	0	0	0	0	0	0
PM Peak Vol	0	0	0	0	0	0	0	0	0	0	0	0

Maryland State Highway Administration
Highway Information Services Division
Turning Counts Study - Field Sheet

Request No.:
Job No.:

Location: Randolph and Nebel
Date: 10/8/2011 Saturday
Recorder: AM
Interval (dd) : 15
(In Minutes)

County: Montgomery
Town: North Bethesda
Weather: Sunny

PEAK HOURS	AM PERIOD 6:00AM-12:00PM	Start	End	Volume	PM PERIOD 12:00PM-7:00PM	Start	End	Volume
		11:00	12:00	2178		13:00	14:00	0

Turning Movement Summary:

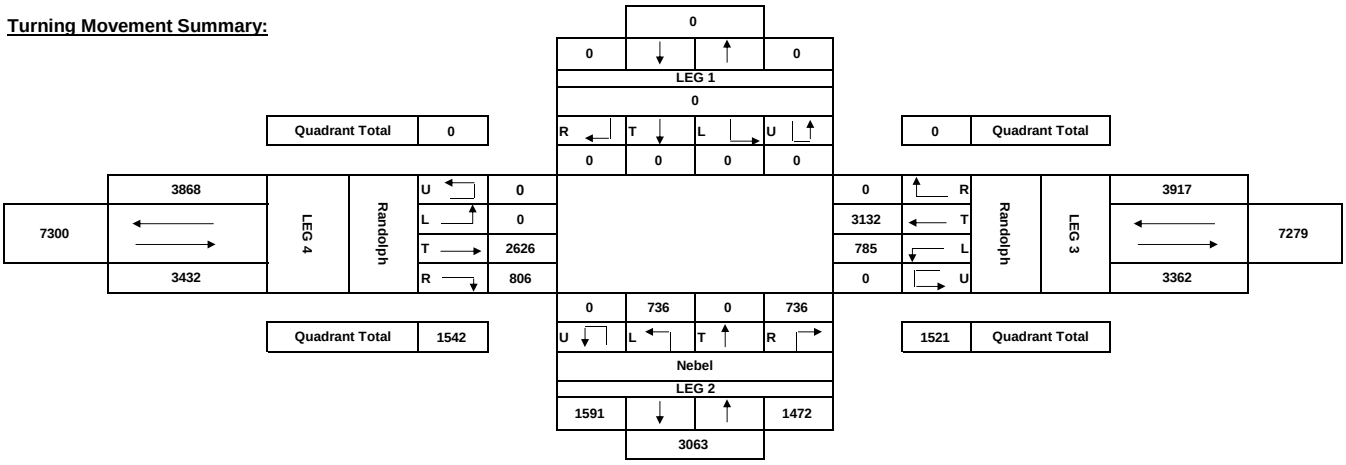

Comments:

AM Peak Hour :

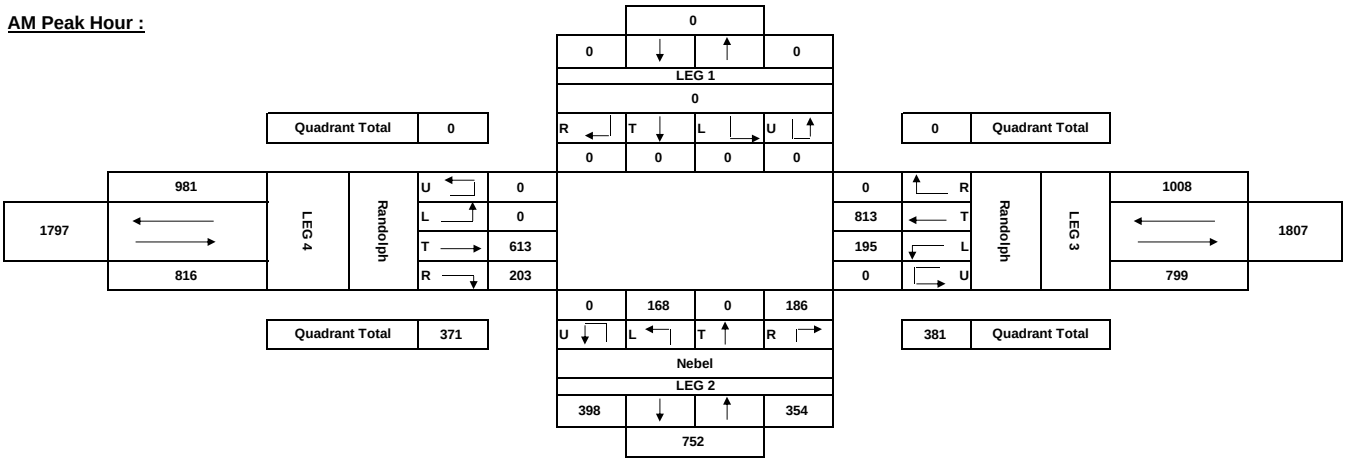

PM Peak Hour :

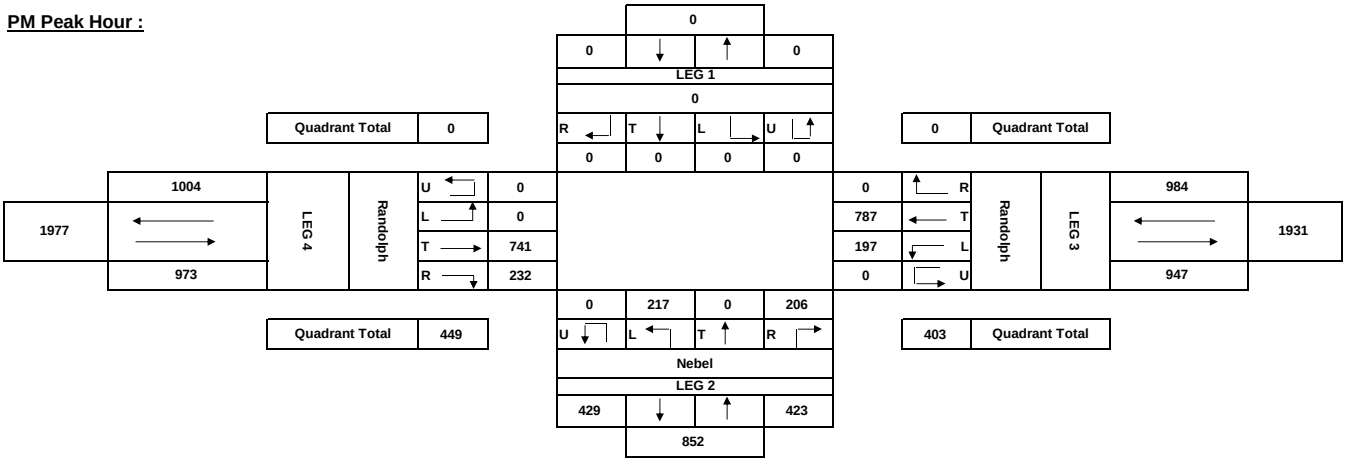

INTRODUCTION

The Maryland State Highway Administration (MDSHA) is coordinating efforts with the Montgomery County DPWT in performing design activities associated with Phase 2 of the Montrose Parkway improvements.

Phase I of this project (shown as yellow in Figure 1) includes grade separating MD 355 over Montrose Parkway, while providing northbound access and egress from MD 355 to Montrose Parkway via new ramps. The Phase I improvements also include improvements at Hoya Street and Montrose Road and Hoya Street at Montrose Parkway. These improvements have been already been completed and are currently open to traffic.

Phase II of this project (shown as blue in Figure 1) includes grade separating Montrose Parkway over Parklawn Drive including changes to Randolph Road connection east of Maple/Chapman Avenue with changes at Nebel Street and Parklawn Drive intersections along Randolph Road.

Figure 1: Montrose Pkwy Phase 1 & Phase 2 Improvements

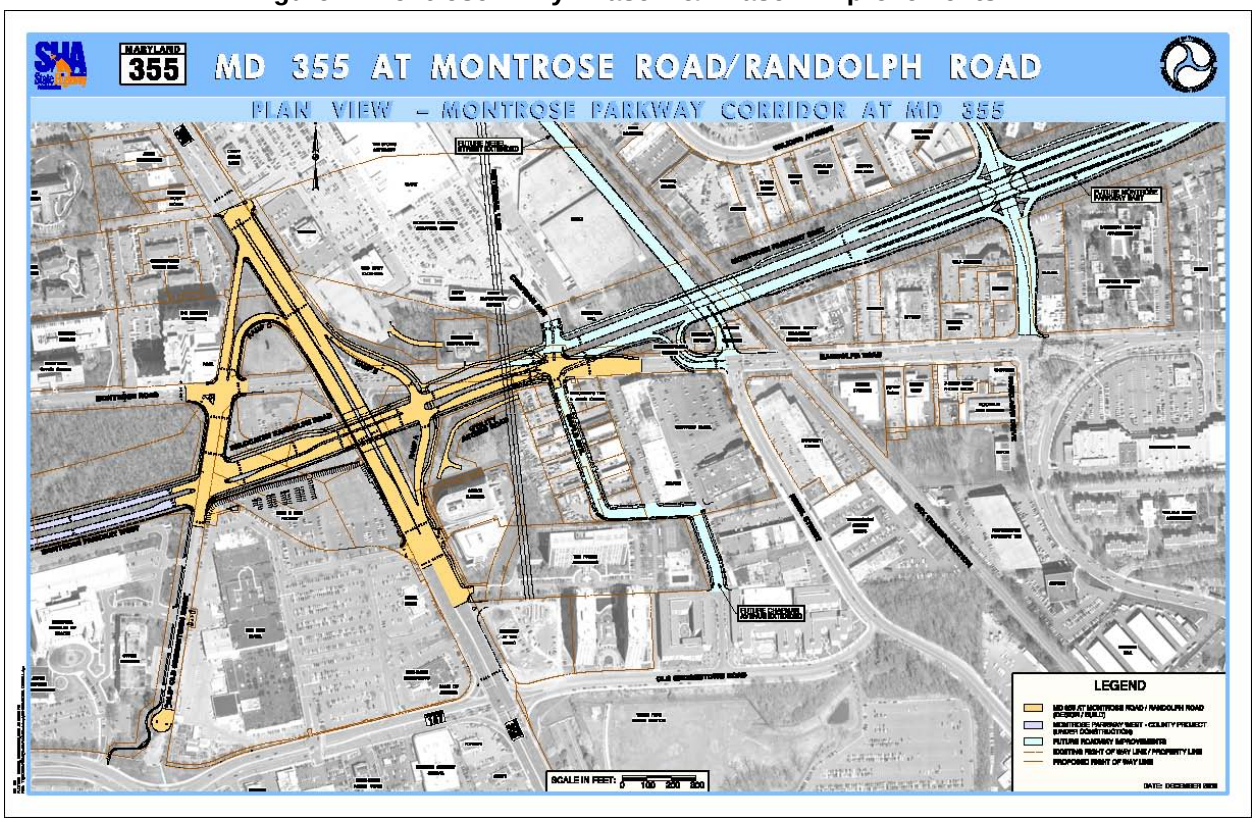

STUDY AREA

The project study area includes the entire White Flint Sector Plan area, and extends beyond both the East and West the limits of the Sector Plan along the Montrose Parkway alignment. The western limits go beyond the tie-in of Montrose Road and Montrose Parkway, while the eastern limits extend to MD 586 (Veirs Mill Road). This is consistent with the future extension of Montrose Parkway, which ties into MD 586 at Parkland Drive. The study area also goes beyond the southwest portion of the Sector Plan, to include East Jefferson Street and Executive Boulevard. A map of both the study area and the Sector Plan are shown in Figure 2.

Figure 2: Project Study Area

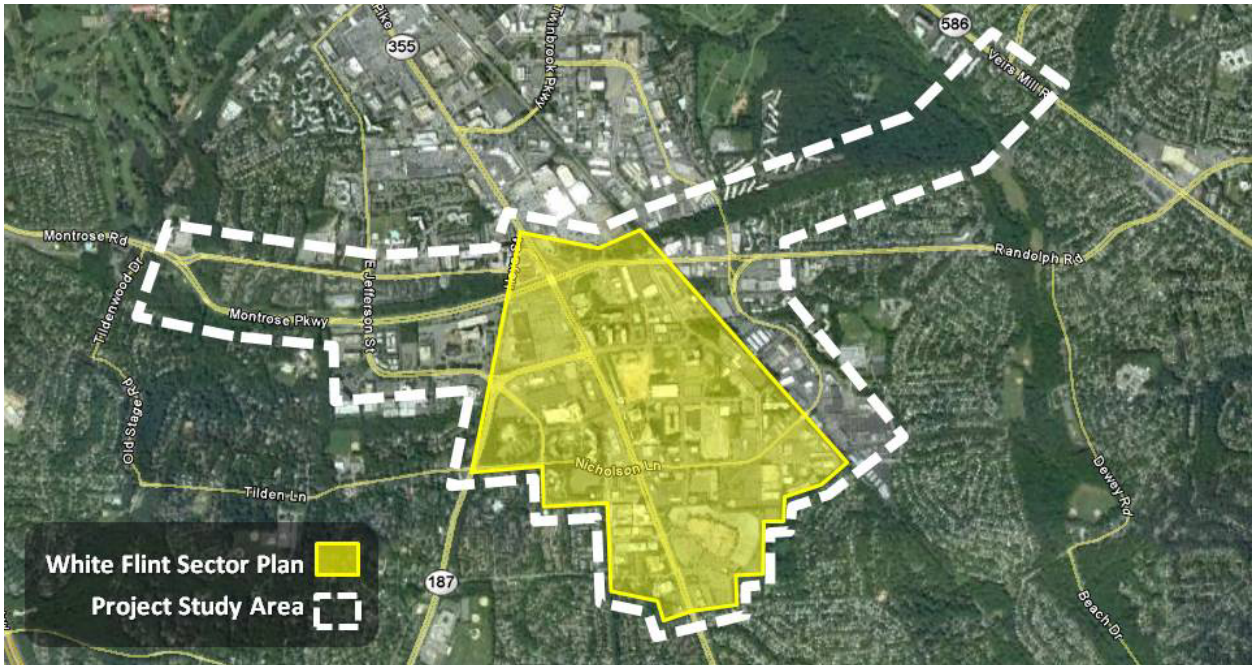

EXISTING TRAFFIC

Existing traffic was developed from 13-hour turning movement counts conducted in the summer of 2011. Manual turning movement counts were performed during a 2-week timeframe prior to the summer recess for the area schools. All signalized intersections and one unsignalized intersection (SHA and County) listed below were included in the study area.

- MD 355 @ Bou Ave
- MD 355 @ Hubbard Dr
- MD 355 @ Mid Pike Plaza
- MD 355 @ MD 187
- MD 355 @ Marinelli Rd
- MD 355 @ Nicholson Ln
- MD 355 @ Security Ln
- MD 355 @ Edson Ln
- MD 187 @ Mid Pike Plaza
- MD 187 @ Executive Blvd
- MD 187 @ Nicholson Ln
- Montrose Pkwy @ Montrose Rd
- Montrose Pkwy @ Kaiser Access
- Montrose Pkwy @ E. Jefferson St
- Montrose Pkwy @ Hoya St
- Montrose Pkwy @ MD 355 NB Ramps
- Montrose Pkwy @ Parklawn Dr
- Randolph Rd @ Maple Ave
- Randolph Rd @ Nebel St
- Randolph Rd @ Paklawn Dr East

- Randolph Rd @ Paklawn Dr West
- Randolph Rd @ Lauderdale Dr
- Montrose Rd @ E. Jefferson St
- Montrose Rd @ Hoya St
- Montrose Rd @ Hebrew Home
- Nicholoson Ln @ Executive Blvd
- Nicholson Ln @ Nebel St
- Old Georgetown Rd @ Nebel St (Unsignalized)

TRAFFIC ANALYSIS

A comprehensive analysis of the MD 355 and Montrose Parkway arterials as well as the key SHA and County intersections within the study limits was performed using Synchro/SimTraffic (version 7).

The existing and future traffic volumes developed as described earlier were used as input for traffic analysis. The lane use for the existing condition as well as other necessary input data (number of lanes, acceleration deceleration lane lengths, etc.) for analysis were obtained based on aerial photography and validated by field observations.

Synchro models for both AM and PM peak periods were developed for 2011 Existing Condition. The existing conditions include the newly constructed interchange at MD 355 and Montrose Parkway West and at-grade intersections along Randolph Road.

The 2011 Existing Condition model was calibrated to ensure the SimTraffic simulation reasonably reflects existing field conditions during both peak periods on an average weekday. AM and PM peak period travel time runs collected in May 2011 on a typical weekday were used as the calibration measure. The travel time runs generated from the model were based on three 1-hour SimTraffic runs for both AM and PM peak. The field and model travel times were compared for Randolph Road, Montrose Pkwy, MD 355 and MD 187 within the study limits. Necessary adjustments were made to the Synchro/SimTraffic models to see whether the field and model travel times were within 10% of each other (according to acceptable industry standards) for the various study segments. The calibration results for Randolph Road, Montrose Pkwy, MD 355 and MD 187 within the study limits are shown on pages 4 & 5.

Once it was determined that the model and field travel times for the various study segments were within reason of each other, the Synchro models were considered calibrated for the 2011 weekday AM and PM peak existing traffic conditions.

Randolph Rd EB	AM Peak			PM Peak		
	Field TT (sec)	SimTraffic TT (sec)	Difference (sec)	Field TT (sec)	SimTraffic TT (sec)	Difference (sec)
NB MD 355 Ramps	0	0	0	0	0	0
Maple Ave	20	18	2	20	15	5
Nebel Street	20	22	-2	18	19	-1
Parklawn (West)	48	46	2	78	73	5
Parklawn (East)	62	71	-9	9	10	-1
Lauderdale Drive	15	17	-2	13	15	-2
Total	**165**	**174**	**-5%**	**138**	**132**	**4%**

Randolph Rd WB	AM Peak			PM Peak		
	Field TT (sec)	SimTraffic TT (sec)	Difference (sec)	Field TT (sec)	SimTraffic TT (sec)	Difference (sec)
Lauderdale Drive	0	0	0	0	0	0
Parklawn Drive	50	48	2	54	53	1
Nebel Street	34	29	5	32	40	-8
Chapman Ave	40	39	1	28	34	-6
NB MD 355 Ramps	50	53	-3	64	66	-2
Total	**174**	**169**	**3%**	**178**	**193**	**-8%**

Montrose Pkwy EB	AM Peak			PM Peak		
	Field TT (sec)	SimTraffic TT (sec)	Difference (sec)	Field TT (sec)	SimTraffic TT (sec)	Difference (sec)
Montrose Road	0	0	0	0	0	0
E. Jefferson Street	84	84	0	90	88	2
Hoya Street	44	41	3	60	54	6
NB MD 355 Ramps	19	21	-2	30	27	3
Total	**147**	**146**	**1%**	**180**	**169**	**6%**

Montrose Pkwy WB	AM Peak			PM Peak		
	Field TT (sec)	SimTraffic TT (sec)	Difference (sec)	Field TT (sec)	SimTraffic TT (sec)	Difference (sec)
NB MD 355 Ramps	0	0	0	0	0	0
Hoya Street	25	20	5	34	31	3
E. Jefferson Street	67	57	10	67	72	-5
Montrose Road	80	86	-6	70	74	-4
Total	**172**	**163**	**5%**	**171**	**177**	**-4%**

MD 187 NB	AM Peak			PM Peak		
	Field TT (sec)	SimTraffic TT (sec)	Difference (sec)	Field TT (sec)	SimTraffic TT (sec)	Difference (sec)
Nicholson Ln	0	0	0	0	0	0
Executive Blvd	35	38	-3	77	85	-8
MD 355	140	133	7	150	158	-8
Total	**175**	**171**	**2%**	**227**	**243**	**-7%**

MD 187 SB	AM Peak			PM Peak		
	Field TT (sec)	SimTraffic TT (sec)	Difference (sec)	Field TT (sec)	SimTraffic TT (sec)	Difference (sec)
MD 355	0	0	0	0	0	0
Executive Blvd	107	111	-4	88	90	-2
Nicholson Ln	39	42	-3	45	39	6
Total	**146**	**153**	**-5%**	**133**	**129**	**3%**

MD 355 NB	AM Peak			PM Peak		
	Field TT (sec)	SimTraffic TT (sec)	Difference (sec)	Field TT (sec)	SimTraffic TT (sec)	Difference (sec)
MD 547	0	0	0	0	0	0
Edson Lane	23	18	5	42	37	5
Security Lane	19	14	5	21	20	1
Nicholson Lane	46	50	-4	86	85	1
Marinelli Road	37	32	5	61	68	-7
MD 187	48	55	-7	72	80	-8
Mid Pike Plaza	25	24	1	23	29	-6
Montrose Pkwy	15	19	-4	30	24	6
Hubbard Drive	15	16	-1	41	38	3
Bou Ave	19	25	-6	27	34	-7
Total	**247**	**253**	**-2%**	**403**	**415**	**-3%**

MD 355 SB	AM Peak			PM Peak		
	Field TT (sec)	SimTraffic TT (sec)	Difference (sec)	Field TT (sec)	SimTraffic TT (sec)	Difference (sec)
Montrose Pkwy	0	0	0	0	0	0
Mid Pike Plaza	20	25	-5	29	24	5
MD 187	48	54	-6	38	43	-5
Marinelli Road	25	22	3	46	38	8
Nicholson Lane	42	35	7	56	54	2
Security Lane	38	30	8	34	38	-4
Edson Lane	19	21	-2	22	23	-1
Total	**192**	**187**	**3%**	**225**	**220**	**2%**

Map 46: Existing and Proposed Street Network

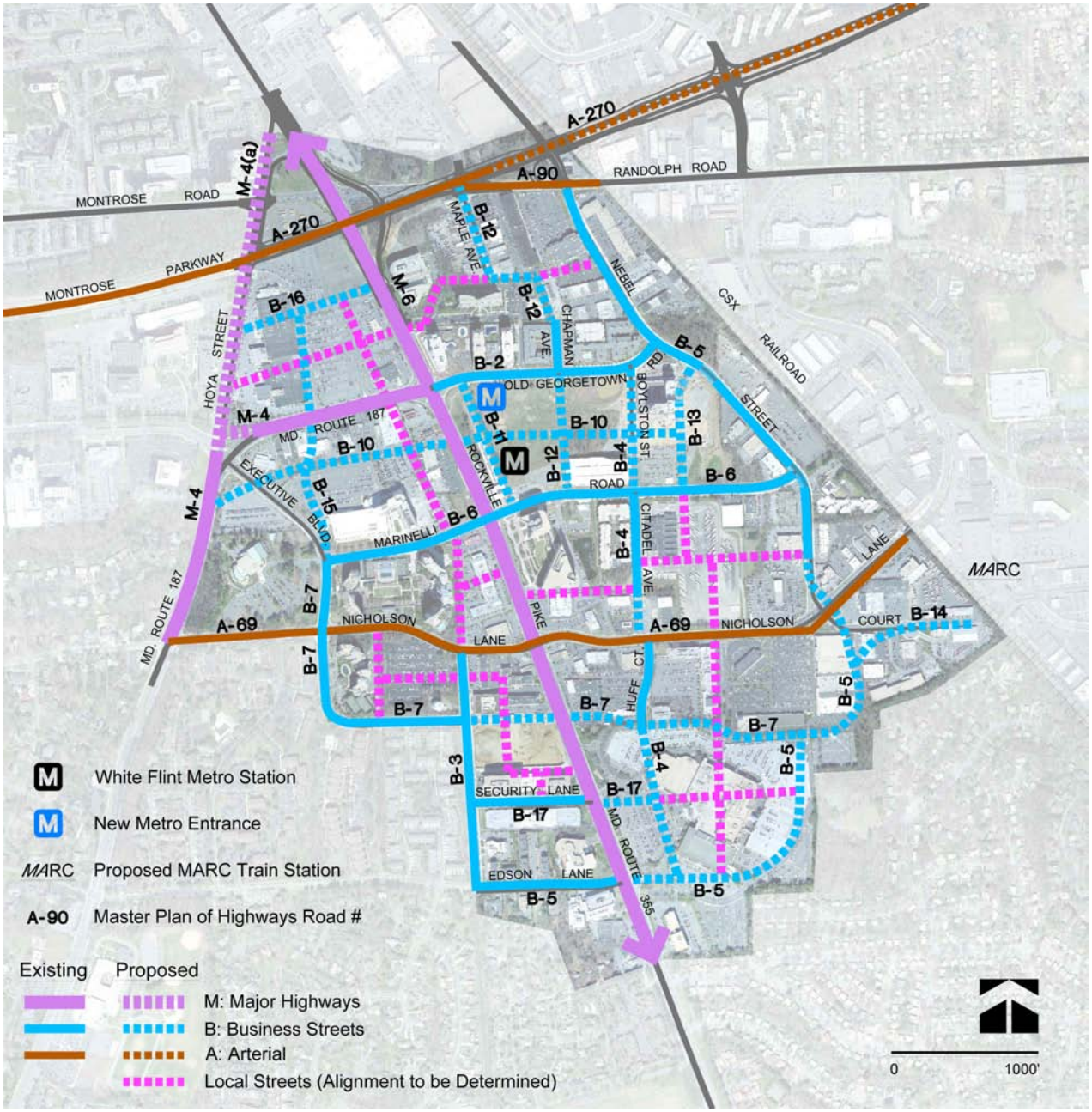

Street Network

- Implement the master planned street network (Map 46). Sector Plan area streets should adhere to the design standards of the County Road Code. Nebel Street is to have a three-lane cross section to allow for a southbound travel lane and continuous left turn lane. Pedestrian refuge islands can be provided where Nebel Street forms a T intersection with B-2, B-13 and B-6, because there is no left turn lane.
- Implement non-master planned street and alley connections in conformance with the Montgomery County Zoning Ordinance, White Flint Urban Design Guidelines, and the County Road Code. These streets may be public or private and provide flexibility for operational functions including property access, loading, and parking.
- Target speeds for the Sector Plan area roadways are 25 miles per hour except for Montrose Parkway, which has a target speed of 35 miles per hour.

Privatization of Traffic-Carrying Streets

Four proposed street segments in the Sector Plan area are classified as master-planned business streets, based on their need to carry traffic as part of the determination of master plan transportation system adequacy:

- Woodglen Drive Extended (B-3) between Nicholson Lane and Mid-Pike Rung;
- Huff Court Extended (B-4) between Executive Boulevard Extended and Nebel Street Extended;
- New Street (B-18) between Chapman Avenue and Nebel Street; and
- New Street (B-19) between Nicholson Lane and Executive Boulevard Extended.

These four streets may be implemented as private streets subject to the following conditions:

1. Public easements must be granted for the roadway and be reviewed and approved by the Maryland-National Capital Park and Planning Commission (M-NCPPC) and the Department of Transportation (MCDOT) for connectivity and consistency with Figure 43 of the White Flint Sector Plan prior to acceptance of the easement.
2. The design of the road must follow or improve the corresponding Road Code standard for a similar public road, unless approved by MCDOT and the Planning Board at the subdivision review stage or otherwise specified in the Sector Plan.
3. Installation of any public utilities must be permitted within such easement.
4. The road will not be closed for any reason unless approved by MCDOT.
5. Approval from the Department of Fire and Rescue Services must be obtained for purpose of fire access.
6. The public easement may be volumetric to accommodate uses above or below the designated easement area.
7. The County may require the applicants to install appropriate traffic control devices within the public easement, and the easement must grant the right to the County to construct and install such devices.
8. Maintenance and Liability Agreements will be required for each Easement Area. These agreements must identify the applicants' responsibility to maintain all of the improvements within their Easement Area in good fashion and in accordance with applicable laws and regulations.

Transit

- Construct a northern entrance to the Metro station in the southeast quadrant of Rockville Pike and Old Georgetown Road.
- Construct a MARC station at Nicholson Court. The location replaces the Bou Avenue location recommended in the 1992 North Bethesda/Garrett Park Master Plan. The relocation is appropriate since White Flint will be the most intensely developed activity center in North Bethesda along the Brunswick line.
- Provide bus transit transfer facilities serving the Metro and MARC stations. A minimum of ten bus bays should be provided at the Metro station and two bus bays at the MARC station.
- Support the development and maintenance of shuttle bus services serving both the Sector Plan area and immediately adjacent commercial properties.

- Develop circulator bus routes to provide local service, particularly on the east and west cross streets.
- Examine opportunities for bus priority treatments for east-west routes along Montrose Parkway.

Rockville Pike and Promenade

The primary purpose of Rockville Pike is to accommodate the movement of people and goods in all modes in a safe and efficient manner, and provide connectivity for travel to, from, and through all Sector Plan area neighborhoods and adjacent communities.

The Plan recommends retaining Rockville Pike as a six-lane major highway but stresses the need to redesign and reconstruct the Pike as an urban boulevard with both design elements and adjacent building lines reinforcing the need to lower travel speeds as appropriate for an urban environment.

The reconstruction of the Pike needs to include:

- elements that provide pedestrian comfort along sidewalks and in crosswalks
- on-road bicyclist accommodation
- bus priority lanes located to balance the needs for Metrorail feeder, circulator, and potential new line-haul services along Rockville Pike as would be found desirable to supplement Metrorail.

The design analysis for Rockville Pike should be undertaken during the first phase of the Plan as a priority study with the support of the County Executive and Council. During that time, there may be requests for development approval for projects fronting Rockville Pike. The recommended right-of-way is 150 feet, but additional right-of-way up to 162 feet should be reserved during the development process to accommodate the conclusion of the design analysis.

The design analysis needs to reflect:

- a BRT network north and south of the Sector Plan area should be examined by the County during the next year. In the interim, both barrier-separated median busway and curb-lane busway options should be preserved
- transit service concept planning
- pedestrian demand studies focused on Metrorail access
- Metrorail tunnel structural load analyses
- coordination with utility companies
- operational analysis of the effect of on-street parking.

Within six months of the publication of a final report documenting the Countywide Bus Rapid Transit Study, and after holding a public hearing, the County Council may determine whether the busway should be located in the median or along the outside curbs of Rockville Pike. The Council may also reduce the minimum right-of-way width for Rockville Pike from 162′ to 150′ at that time.

Market Street and Promenade

- The Planning Board, County Executive, and County Council should initiate a CIP project as a public/private partnership with the property owners in the Conference Center Block to select a road alignment and cross section for Market Street. When development occurs, each property can provide the needed right-of-way, locate driveways and loading areas, set back buildings correctly, and provide their share of the streetscape. The promenade will include a wide sidewalk for pedestrian and bicycle use and a distinctive streetscape with a mature tree canopy (Figure 10).

Travel Demand Management

- Establish a 50 percent non-auto driver mode share goal for employees arriving at work during the morning peak period in the Sector Plan area. The current non-auto driver mode share for the Sector Plan area is 26 percent. The Plan goal is aggressive but achievable through the combination of land use (density, diversity, and design) and zoning requirements, transit improvements, supportive travel demand management programs, and staging. Establish a 51 percent non-auto driver mode share goal for employed residents in the Sector Plan area leaving home during the morning peak period.

Parking Management

- Encourage provision of public parking by private development through incentives in the CR Zone.
- Establish a parking management authority for the Sector Plan area to assist in the active management of parking demand and promote shared parking efficiencies, particularly relieving the requirement for smaller properties to self-park. Public/private parking agreements should be encouraged as private properties redevelop.

Growth Policy

- Amend the White Flint Metro Station Policy Area boundaries to be coterminous with the Sector Plan boundary. The Sector Plan boundary was developed in anticipation of amending the Policy Area boundary. This would support transit-oriented development, including establishment of higher intersection congestion thresholds.
- Establish an alternative adequate public facilities (APF) review procedure with an exaction process based on the planned transportation infrastructure as proportioned to the traffic generated by each development. This will improve the efficiency of both the development review process (minimizing administrative costs) and infrastructure delivery (by avoiding “lumpy” infrastructure implementation).

Table 4: Roadway Facility and Segment						
Street	**From**	**To**	**Road Number**	**ROW (feet)**	**Lanes***	**Road Code Standard**
Major Highways						
Old Georgetown Rd (MD 187)	Nicholson Ln	Executive Blvd	M-4	150	6, divided	2008.02 mod.
	Executive Blvd	Rockville Pike (MD 355)	M-4	120	4, divided	2008.01 mod.
Hoya St	Executive Blvd	Montrose Pkwy	M-4a	120	4, divided	2008.01 mod.
Rockville Pike (MD 355)	Sector Plan southern boundary	Sector Plan northern boundary	M-6	150 (162**)	6, divided	2008.02 mod.
Arterials						
Montrose Pkwy	Hoya St	Sector Plan eastern boundary	A-270	300	4, divided	2007.01 mod.
Randolph Rd	Montrose Pkwy	Plan eastern boundary	A-90	100	4	2004.01 mod. / 2004.28 mod.
Nicholson Ln	Old Georgetown Rd (MD 187)	Sector Plan eastern boundary	A-69	90	4	2004.02 mod. 2004.26 mod.
Business Roads						
Chapman Ave (Maple Ave)	Marinelli Rd	Old Georgetown Rd	B-12	70	2	2005.02
	Old Georgetown Rd	Montrose Pkwy	B-12	70	2	2005.02
Citadel Ave/Boylston St	Nicholson Ln	Old Georgetown Rd	B-4	70	2	2005.02
Edson Ln	Woodglen Dr	Rockville Pike (MD 355)	B-5	70	2	2004.21 mod. / 2005.02 mod.
Executive Blvd Extended	Marinelli Rd	Nebel St Extended (B-5)	B-7	80	4	2004.01
Huff Ct/ Huff Ct Extended	Executive Blvd Extended	Nicholson Ln	B-4	70	2	2005.02
Huff Ct/ Huff Ct Extended* **	Nebel St Extended (B-5)	Executive Blvd Extended	B-4	70	2	2005-02
Station St	Marinelli Rd	Old Georgetown Rd	B-11	70	2	2005.02
Marinelli Rd	Executive Blvd	Nebel St	B-6	90	4	2005.03 mod.
Market St	Old Georgetown Rd (MD 187)	Rockville Pike (MD 355)	B-10	70	2	2005.02
McGrath Blvd	Rockville Pike (MD 355)	Wentworth Pl (B-13)	B-10	70	2	2005.02
Mid-Pike spine street	Marinelli Rd	Old Georgetown Rd (MD 187)	B-15	80	4	2004.01
	Old Georgetown Rd (MD 187)	New Street (Mid-Pike rung) (B-16)	B-15	70	2	2005.02
Nebel St Extended	Randolph Rd	Plan northern boundary	B-5	80	4	2004.24 mod.
Nebel St	Nicholson Ln	Randolph Rd	B-5	80	2	2004.24 mod.
Nebel St Extended	Rockville Pike (MD 355)	Nicholson Ln	B-5	80	2	2004.01 mod. 2005.02 mod.
new street (Mid-Pike rung)	Hoya St	Rockville Pike (MD 355)	B-16	80	2	2005.02 mod.
Nicholson Ct (realigned)	Nebel St Extended	900 feet east of Nebel St Extended	B-14	70	2	2005.02
Old Georgetown Rd	Rockville Pike (MD 355)	Nebel St	B-2	90	4	2004.02 mod. / 2005.03 mod.
Security Ln/Security Ln Extended	Woodglen Dr	Huff Ct Extended (B-4)	B-17	70	2	2005.02
Wentworth Pl	Marinelli Rd	Nebel St	B-13	70	2	2005.02
Woodglen Dr	Edson Ln	Nicholson Ln	B-3	70	2	2005.02 mod.
Woodglen Dr * **	Nicholson Ln	Marinelli Rd	B-3	60	2	2005.02 mod.
Woodglen Dr * **	Marinelli Rd	Mid-Pike Rung (B-16)	B-3	70	2	2005.02 mod.
new street * **	Chapman Ave	Nebel St	B-18	70	2	2005.02
new street * **	Nicholson Ln	Executive Blvd Extended	B-19	70	2	2005.02

*The number of planned through travel lanes for each segment, not including turning, parking, acceleration, deceleration, or other auxiliary lanes.

** The Rockville Pike 150-foot right-of-way can be expanded to 162 feet (additional feet to be obtained through reservation).

*** New streets B-18, B-19, Huff Court Extended (B-4), and the portion of Woodglen Drive (B-3) north of Nicholson Lane may be constructed as private streets subject to use easements meeting the requirements described in the Plan text.

"mod." indicates that some modification is needed to the referenced design standard to reflect planned elements such as transit priority, bike lanes, or turn lanes.

The target speed for all master planned roadways in the Plan area is 25 m.p.h., except for Montrose Parkway with a target speed of 35 m.p.h. in the Plan area.

Bikeway Network

- Provide links to existing and proposed public transit facilities as well as to the outlying bicycle and trails network (Map 47).
- Designate the Sector Plan area as a Bicycle/Pedestrian Priority Area, an official State designation that facilitates the allocation of funds for bicycle and pedestrian improvements on State roads.

Map 47: Existing and Proposed Bikeways

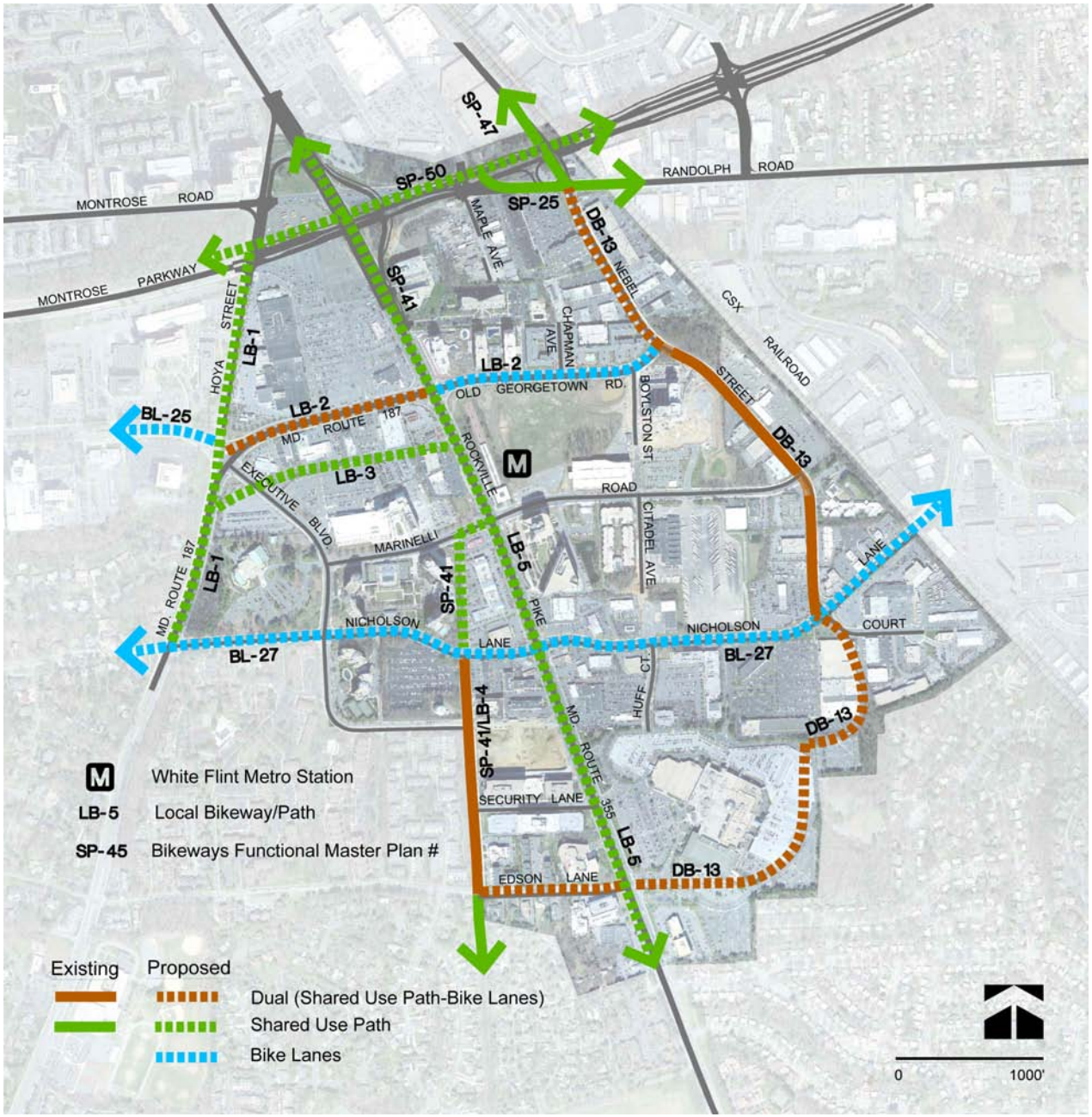

Table 5: Bikeway Facility and Segment				
Street	**From**	**To**	**Route Number**	**Bikeway Type**
Nebel St	Randolph Rd	Nicholson Ln	DB-13	Dual Bikeway: Shared Use Path/ Bike Lanes
Nebel St Extended	Nicholson Ln	Rockville Pike	DB-13	Dual Bikeway: Shared Use Path/ Bike Lanes
Edson Ln	Rockville Pike (MD 355)	Woodglen Dr	DB-13	Dual Bikeway: Shared Use Path/ Bike Lanes
Randolph Rd	Montrose Pkwy	CSX tracks	SP-25	Shared Use Path
Nebel St Extended	Randolph Rd	Sector Plan northern boundary	SP-47	Shared Use Path
Montrose Pkwy	Hoya St	CSX Tracks	SP- 50	Shared Use Path
Nicholson Ln	Old Georgetown Rd	CSX Tracks	BL-27	Bike Lanes
Old Georgetown Rd (MD 187)	Nicholson Ln	Executive Blvd	LB-1	Shared Use Path
Hoya Street	Executive Blvd	Montrose Pkwy	LB-1	Shared Use Path
Old Georgetown Rd	Executive Blvd/Hoya St	Rockville Pike	LB-2	Dual Bikeway: Shared Use Path/ Bike Lanes
	Rockville Pike	Nebel St	LB-2	Bike Lanes
Market St	Old Georgetown Rd	Rockville Pike	LB-3	Shared Use Path
Rockville Pike (MD 355)	Edson Ln/Nebel St Extended	Marinelli Rd	LB-5	Shared Use Path
North Bethesda Trolley Trail				
Woodglen Dr	Edson Ln	Nicholson Ln	SP-41 & LB-4	Dual Bikeway: Shared Use Path & Bike Lanes
	Nicholson Ln	Marinelli Rd	SP-41	Shared Use Path
Marinelli Rd	Woodglen Dr	Rockville Pike (MD 355)	SP-41	Shared Use Path
Rockville Pike (MD 355)	Marinelli Rd	Sector Plan Northern boundary	SP-41	Shared Use Path

As White Flint develops into an urban area, all three types of bus serve will need to expand to not only feed Metro but also to serve the more varied land uses and population in White Flint. Routing and scheduling for feeder services will need to consider local land uses in North Bethesda as well as the fastest routes to Metrorail. The County Council has approved funding for a County wide Bus Rapid Transit (BRT) study to begin in FY10 that will consider improved services and facilities along Rockville Pike and the Randolph Road/Montrose Road corridor. The Plan recommendations are designed to promote flexible and seamless connections beyond the Plan area.

The Plan's land use recommendations and design guidelines will facilitate good feeder, circulator, and Pike rapid bus services. Prior efforts to establish shuttle services in White Flint, such as the free White Flint Shuttle established through the White Flint Commuter Service Center, have not yet been sustainable, in part due to the challenges of connecting auto-oriented development with local transit services. As densities increase in White Flint guided by zoning requirements and design guidelines requiring street-oriented buildings, the number of potential transit riders and the attractiveness of transit will increase.

C. Street Network

Figure 6 presents the Public Hearing Draft Plan's proposed street network featuring the following elements.

- A network of business district streets (shown as blue lines) designed to reflect the County Road Code emphasis on multimodal access and stormwater management. The Plan's recommendation and their implementation gives special attention to new street connections in the White Flint Mall and Mid-Pike Plaza/Metro West districts.
- A secondary network of conceptual business district streets (shown as fuschia lines) that will provide internal site accessibility focused on enhancing pedestrian connectivity by reducing block size. These streets also provide opportunities to establish shared streets that emphasize public realm objectives beyond transportation. Some of these streets and alleys may, like Ellsworth Avenue in Silver Spring, be privately owned and operated and therefore may not conform to County design standards. These streets are therefore not included in the street and highway table in the Plan that identifies street functions, travel lanes, and rights-of-way.

Specific streets described in the Plan and this Appendix include:

- a reconstructed, pedestrian-friendly Rockville Pike that will incorporate Bus Rapid Transit treatments
- a reconstruction of Old Georgetown Road (MD 187) and Executive Boulevard to facilitate north-south traffic movement along the Plan's western boundary (rather than the existing pattern directing MD 187 traffic to MD 355 at the Metrorail Station)
- a Town Center area focused around a new east-west Main Street (B-10)
- networks of local streets within the White Flint Mall, Mid-Pike Plaza, and Metro West districts.

Figure 6: Public Hearing Draft Plan Street Network

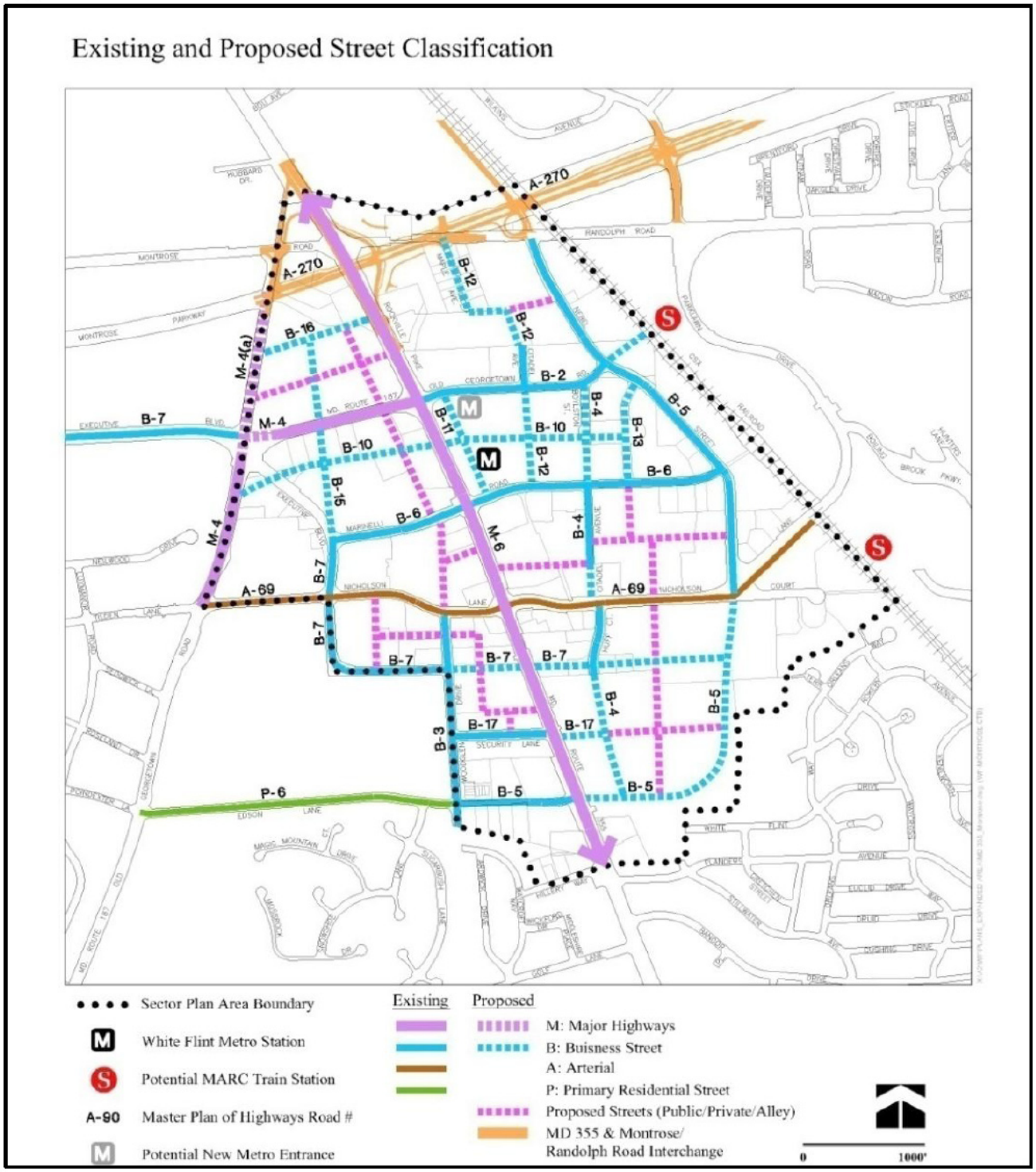

Master Planned Business Streets

The *White Flint Sector Plan's* primary street network includes major highways, arterials, and master-planned business streets. These streets are required elements of the Plan and associated development and should be built to County design standards to accommodate both regional (for major highways and arterials) and local (for business streets) travel needs.

Section 49-31 of the County Code defines the functional classification system for roadways, including:

- A Major Highway is a road meant nearly exclusively for through movement of vehicles at a moderate speed. Access must be primarily from grade-separated interchanges and at-grade intersections with public roads, although driveway access is acceptable in urban and denser suburban settings.
- An Arterial is a road meant primarily for through movement of vehicles at a moderate speed, although some access to abutting property is expected.
- A Business District Street is a road meant for circulation in commercial and mixed-use zones.
- A Primary Residential Street is a road meant primarily for circulation in residential zones, although some through traffic is expected.

The Plan proceeded in tandem with the development of the County's Road Code (Chapter 49) in 2006 and design standards (Executive Regulation 31-08) in 2007 and 2008. Executive Regulation 31-08 stresses the need to develop context-sensitive solutions with street designs that reflect and emphasize the planned adjacent land uses. The design guidance recognizes that a continuum exists across the County's rural, suburban, and urban areas.

The Plan proposes that White Flint become a more urban, with Floor Area Ratios (FAR) of 2.5 to 4.0 throughout the Plan area. The future White Flint street network will both appear and function more like those in Bethesda and Silver Spring do today, with narrower lanes, a wider landscaped pedestrian realm, and buildings that have activated streetfront uses adjacent to the sidewalk all contributing to a more pedestrian-friendly environment. The land uses, roadway design, and street-level activity all convey the message that slower vehicle speeds are appropriate. The business street system is intended to be a slow-speed environment, with both the public and private realms designed for a 25 mile per hour target speed.

Montrose Parkway is the exception to the 25 mile-per-hour target speed with an arterial function serving more than the Plan area.

The I-270 Corridor is job-intensive, and both Rock Creek and the CSX tracks are barriers between the jobs in the I-270 Corridor and the housing-rich communities of Olney, Aspen Hill and Kensington/Wheaton. High-quality auto and transit connections across these barriers are limited to a few routes:

- Montrose Parkway
- Norbeck Road/Gude Drive
- Intercounty Connector

The target speed for Montrose Parkway is set at 35 miles per hour, recognizing that this facility will pass through a heavily developed commercial area, but that primary access to the adjacent land uses will not be to and from Montrose Parkway.

Secondary Grid of Local Streets and Alleys

The Plan describes a secondary system of streets and alleys that will be developed to complement the master planned business street system. The secondary grid will facilitate site access (particularly for the larger development sites), improve the permeability of the network for pedestrian and bicyclists, and provide flexibility for private street treatments such as festival streets, shared streets, and streets located above underground parking structures. Notable elements include:

- extending Woodglen Drive north from Nicholson Lane to the Mid-Pike Plaza district as a service road parallel to Rockville Pike
- developing a grid of streets in the NRC district. Due to security concerns and space constraints, the proposed east-west connection between Rockville Pike and Citadel Avenue would likely be limited to a 20-foot wide alley for non-motorized vehicles only; this is the only Plan-recommended street for which vehicular access is not anticipated

- developing a street grid serving White Flint Mall implemented when the mall structure is redeveloped. *The Planning Board Draft Plan does not show an alignment of streets affecting the mall structure*.

The secondary grid is not an explicit element of the master planned street network but it is needed to make pedestrian connections. Short block lengths (a maximum of 350 feet) should be considered an element of master plan consistency in the site plan review process.

MD 355/Rockville Pike

The Plan proposes reconstructing Rockville Pike to improve pedestrian access and comfort, increase pervious area, and facilitate transit priority treatments.

Figures 7 and 8 show the boulevard concept for the Pike, including:

- maintaining three continuous through travel lanes
- expanding the median with space for separate left turn lanes, landscaping, and pedestrian refuge
- developing a curb lane for bus-priority treatment and bicycle use during peak periods with the potential for off-peak period parking to serve adjacent uses.

Figure 7: Rockville Pike Boulevard Concept

Figure 8: Rockville Pike Section at Marinelli Road

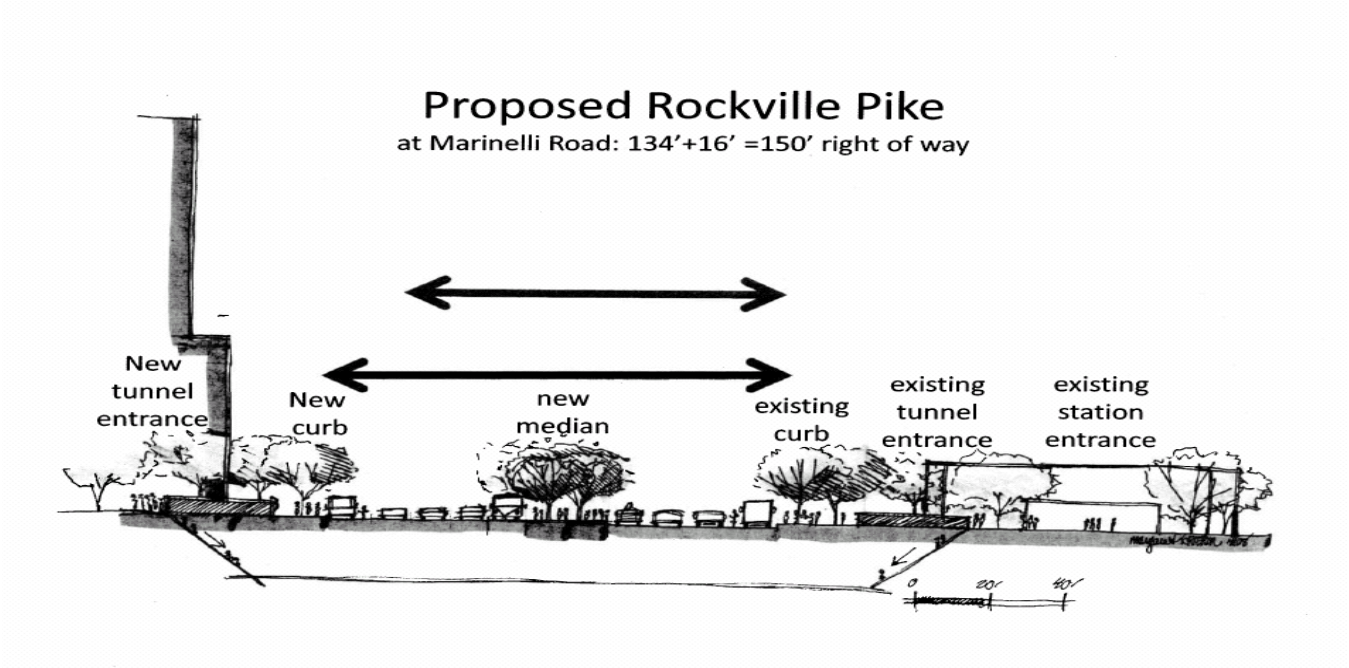

The plan for the Pike recognizes that expansion on the east side is constrained by the Metrorail Red Line tunnel and NRC's security requirements. The Plan recommends a 150-foot wide right-of-way for the Pike that would require 75 feet of dedication a westerly realigning the roadway centerline to the west may be needed to accomplish the Plan goals; such a realignment that held the roadway eastern curb line constant would result in right-of-way needs along the roadway's western edge.

The Plan recommends two new local street crossings of Rockville Pike at full-movement, signalized intersections: Main Street (B-10) and Executive Boulevard Extended (B-7). The Plan also recommends converting driveway access points into full-movement signalized intersections at Mid-Pike Plaza (B-16), the Security Lane entrance to White Flint Mall (B-17), and Nebel Street Extended (B-5). These full-movement crossings will improve vehicle and pedestrian access across Rockville Pike.

Maryland State Highway Administration (SHA) staff has participated in both *White Flint Sector Plan* meetings and the *Rockville Pike Corridor Master Plan* being developed by the City of Rockville. Both plans envision a reconstruction of Rockville Pike, although with slightly different typical sections (the City is contemplating retaining the current narrow median and implementing continuous service roadways in a multi-way boulevard concept). The Montrose Parkway interchange, currently under construction, provides a logical pivot point from which the two different typical sections might be developed so there is no need to develop a single, consistent section for the two plan efforts.

The SHA would need to lead the development and evaluation of any substantial reconstruction of Rockville Pike in White Flint, including the proposed boulevard concept shown in Figure 7. This development and evaluation process would begin with a project planning study that considers the boulevard concept and possible modifications.

The process continues with Preliminary Engineering, which requires including the reconstruction proposal in the County's priority list to the State delegation.

Together, the project planning and preliminary engineering processes typically require three to five years for a project of this type, assuming that it remains a County priority. The Public Hearing Draft Plan recommended establishing a White Flint Redevelopment Implementation Authority, in part to infuse the property owner and community stakeholder interests into the County's priority setting process giving independent funding sponsors priority. Based on continuing coordination with Executive Branch departments, the Planning Board Draft Plan

recommends against an independent implementation authority, but retains the concept of a series of public entities such as a redevelopment office and a financing mechanism to coordinate the implementation of the transportation system improvements.

The White Flint Partnership, a consortium of Plan area property owners and representatives, proposed an alternative concept for Rockville Pike in spring 2009.The alternatives development and implementation process was discussed at worksession #8 on April 30 and an interagency technical working group meeting on May 18. The Planning Board Draft Plan reflects the Planning Board's subsequent decisions for Rockville Pike discussed at worksession #11 on June 4.The Plan recommends a 150-foot wide right-of-way for Rockville Pike based on the current roadway centerline. The Plan also recommends preserving the slightly wider right-of-way in the White Flint Partnership alternative, pending completion of the County's BRT study in FY10.The Partnership proposal includes a typical cross-section of 162 feet that shifts the Rockville Pike centerline up to six feet. (see Sheets 1 and 2).

Old Georgetown Road and Executive Boulevard Realignment

The Plan recommends realigning Old Georgetown Road and Executive Boulevard to form a more regular street grid, thereby increasing redevelopment potential by creating more efficient block shapes. Three related roadway system improvements are needed to straighten and realign the roadway grid in this area:

- abandoning existing Executive Boulevard between Old Georgetown Road and Marinelli Road
- establishing a new alignment for a north-south business street (B-15) from the Executive Boulevard/ Marinelli Road intersection extending north into the Mid-Pike Plaza development
- establishing a new alignment for an east-west business street (B-10 or Main Street) from Rockville Pike to Old Georgetown Road.

This realignment also facilitates traffic movement along Old Georgetown Road from I-270 toward the Montrose Parkway and points north and east. Currently, this traffic follows Old Georgetown Road to meet Rockville Pike in the center of the Plan area.

This connection would carry approximately 28,000 vehicles per day along "Old" Old Georgetown Road between Executive Boulevard and Montrose Parkway. Without this connection, this traffic would either be directed toward Rockville Pike (increasing pressure to widen the Rockville Pike/Old Georgetown Road intersection at the northern Metrorail station entrance where pedestrian mobility needs are highest) or to cut through the Mid-Pike Plaza development on local street B-15.

Substantial coordination with Maryland SHA, property owners, and County agencies is needed to implement this improvement including:

- relocating SHA's current stormwater management project for the Montrose Parkway interchange at the southern end of the existing "Old" Old Georgetown Road cul-de-sac, in conjunction with roadway realignment and property redevelopment
- retaining the network of local streets to minimize disruption and confusion
- establishing a through route for MD 187; staff recommends that MD 187 be redesignated from the east-west portion of Old Georgetown Road (M-4) to the extension of "Old" Old Georgetown Road (M-4a).

Main Street (B-10) and Associated Promenade

The Plan recommends developing an east-west Main Street (B-10) in a 70-foot wide right-of-way connecting Old Georgetown Road at its west end with the North Bethesda Town Center street grid at its east end. LCOR development plans label this roadway as McGrath Boulevard to the east of Rockville Pike. To the west of Rockville Pike, a separate promenade treatment will be developed outside the roadway right-of-way on the south side as described in the Plan.

White Flint Mall District

The establishment of a roadway network in the White Flint Mall District exemplifies the need for both master plan guidance and property owner coordination. One of the Plan's explicit purposes is to develop details regarding the design and location of Executive Boulevard on the east side of Rockville Pike. Figure 9 shows a conceptual proposal for this street grid, which includes:

- establishing Executive Boulevard Extended eastward from Rockville Pike with appropriate shared access by confronting redevelopable properties
- establishing Nebel Street Extended as a compound roadway with two 90-degree turns. The northern 90-degree turn is at the junction with Executive Boulevard Extended in a standard T-intersection. The southern 90-degree turn in the southeast quadrant will need to be revised to incorporate a 150-foot centerline radius. The roadway right-of-way will need to be 80 feet wide to incorporate one travel lane in each direction, a center left turn lane for northbound traffic, and the recommended dual bikeway (bike lanes plus a shared-use path along the eastern side)
- relocating Nicholson Court at Nebel Street Extended to facilitate through movement along Nebel Street Extended and a 90-degree intersection configuration at Nicholson Lane.

The Planning Board Draft Plan reflects an amendment to the concept shown in Figure 9 so that the curve along Nebel Street Extended in the southeast quadrant is the minimum radius (150 feet) for a 25 mile per hour target speed per the discussion in worksession #8 on April 30.

Figure 9: White Flint Mall District Street Network Concept

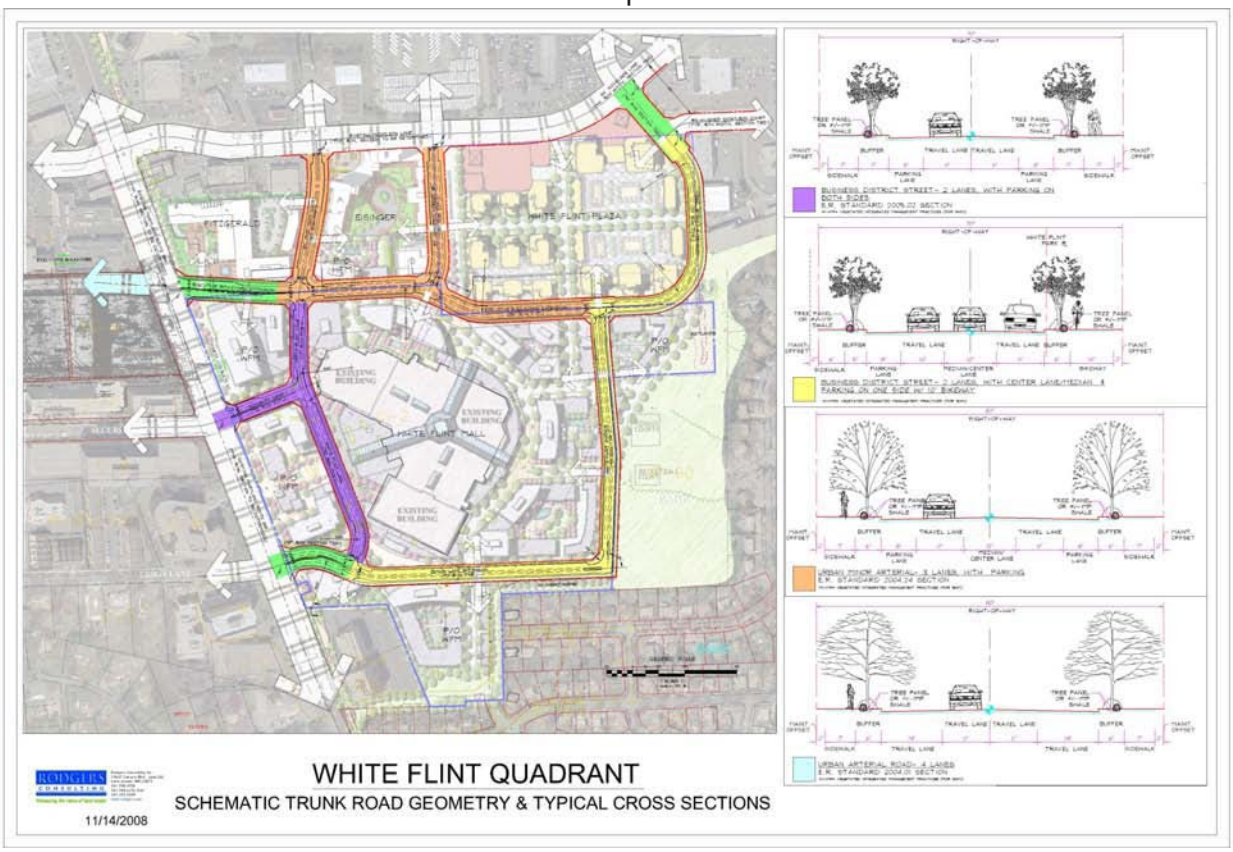

Mid-Pike Plaza and Metro West Districts

The Plan recommends two key business streets (B-16 and B-17) to serve the Mid-Pike Plaza District and provide access to the major highways that form the District's boundaries: Rockville Pike (M-6) to the east, Old Georgetown Road (M-4) to the south, and "Old" Old Georgetown Road (M-4a) to the west.

The street system builds on the existing driveway access plans, with the business district streets B-16 and B-17 intersecting the existing state highways MD 355 and MD 187 at existing signalized intersections and the secondary streets intersecting the state highways where Mid-Pike plaza currently has driveway access. Further analysis will be required to establish more precise centerlines in coordination with the Metro West District. Staff met with property owners to facilitate private sector development of a coordinated concept for local streets.

D. Bicycle and Pedestrian System

The bicycle and pedestrian system recommendations for White Flint will be implemented through a combination of land use and zoning policies, local street network implementation, and pedestrian access and safety improvements.

Bikeway Network

The Public Hearing Draft Plan proposes a bikeway system with two key elements:

- an off-road, shared-use path system connecting White Flint to other areas of the County via the Montrose Parkway and North Bethesda Trolley Trail
- an emphasis on shared-road bikeways within the Plan area, considering the 25 mile-per-hour target speeds that facilitate shared space, rather than separated modal facilities and the Road Code emphasis on bike accommodation on all streets.

Off-road shared use paths and on-road bicycle accommodations serve different markets; most of the active bicyclist community is interested in quality on-road bike accommodation. The number of off-road paths in the Plan is therefore fairly minor; pedestrian facilities are recommended in promenades and heart-smart trails, but space for off-road shared use paths are limited to those connections needed to the regional recreational trail system.

The need for striped bicycle lanes on urban roadways is a matter of agency and staff judgment, and is one of the items still to be resolved in developing design standards to supplement the initial set adopted in Council Resolution 16-809.

In September 2007, the Planning Board supported the staff position on the Road Code that marked bike lanes should generally be provided as a matter of course on roads with daily traffic volumes of more than 20,000 vehicles per day or a posted speed of 45 miles per hour or greater. In the *White Flint Sector Plan*, the roadways are all recommended to have a target speed at 25 or 35 miles per hour. The state highways (MD 355, MD 187), Montrose Parkway, Nicholson Lane, and the northern portion of Nebel Street are the roadways with traffic volumes forecast higher than 20,000 vehicles per day.

The design for Rockville Pike will improve bicyclist accommodation by allowing bicycles to share the curb lane with transit vehicles during peak periods. Still, the traffic volumes and number of lanes will make on-road bike travel intimidating for a proportion of bike users.

Furthermore, the Plan contemplates off-peak period parking along portions of Rockville Pike, and marked bike lanes are incompatible with off-peak period parking. Therefore, the Plan recommends bicycle lanes along Nebel Street (and its southerly extension) to serve as a north-south bicycle arterial and an alternative to Rockville Pike. Nebel Street is a suitable location for bicycle lanes because it serves the eastern side of the Plan area where less intense land uses are expected and the number of cross street and driveway interruptions is relatively low.

In the east-west direction, the Plan recommends bike lanes along Old Georgetown Road and Nicholson Lane to connect to the planned system of bike lanes in the 2005 *Countywide Bikeways Functional Master Plan*.

Appendix B

Maryland State Highway Administration
Turning Movement Summary and
Level of Service

Count Date:
Conditions: Existing
Design Year:

Location: MD 355 @ Twinbrook Parkway

Computed By: JB Date: 4/3/14

Montgomery County Method

Morning Peak Hour 7:15-8:15 am

Lane Configuration

Evening Peak Hour 5:00-6:00 pm

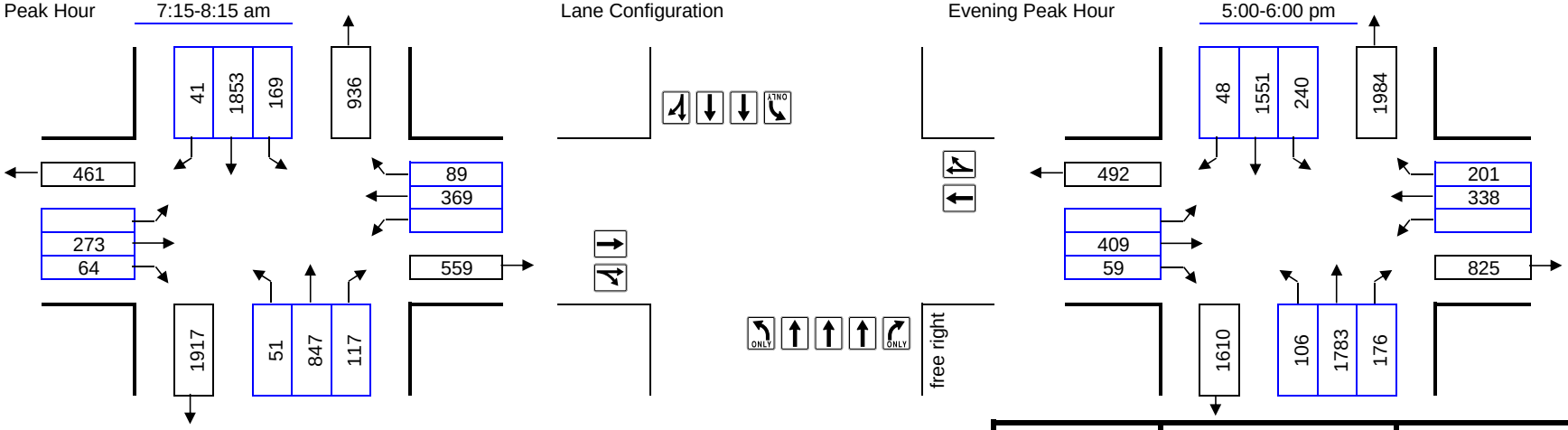

Right Turns Subtracted for Exclusive Right Turn
Overlap Phasing or Right Turn on Red:

	AM	PM
NB Approach:	NB	NB
SB Approach:	SB	SB
EB Approach:	EB	EB
WB Approach:	WB	WB

Number of Lanes	Lane Use Factor		Opposing Volume (vph)		PCE
1 =	1.00	Congestion Standard	≤	199	1.1
2 =	0.53	= 1550	≤	599	2.0
3 =	0.37	for	≤	799	3.0
4 =	0.30	North Bethesda	≤	999	4.0
Dbl-left	0.60	Policy	≥	1000	5.0
		Area			

Movement	Volume	PCE	Lane Use Factor	Lane Volume	Opposing Lefts	Critical Lane Volume	*
NBT + SBL	847	1.00	0.37	313	169	482	
SBTR + NBL	1894	1.00	0.37	701	51	752	*
EBTR	337	1.00	0.53	179	0	179	
WBTR	458	1.00	0.53	243	0	243	*
					Critical Volume	995	OK
					V/C	0.64	

Movement	Volume	PCE	Lane Use Factor	Lane Volume	Opposing Lefts	Critical Lane Volume	*
NBT + SBL	1783	1.00	0.37	660	240	900	*
SBTR + NBL	1599	1.00	0.37	592	106	698	
EBTR	468	1.00	0.53	248	0	248	
WBTR	539	1.00	0.53	286	0	286	*
					Critical Volume	1186	OK
					V/C	0.77	

Maryland State Highway Administration
Turning Movement Summary and
Level of Service

Count Date:
Conditions: Existing Saturday
Design Year:

Location: MD 355 @ Twinbrook Parkway
Computed By: JB
Date: 4/3/14

Montgomery County Method

Morning Peak Hour 7:15-8:15 am

Lane Configuration

Evening Peak Hour 5:00-6:00 pm

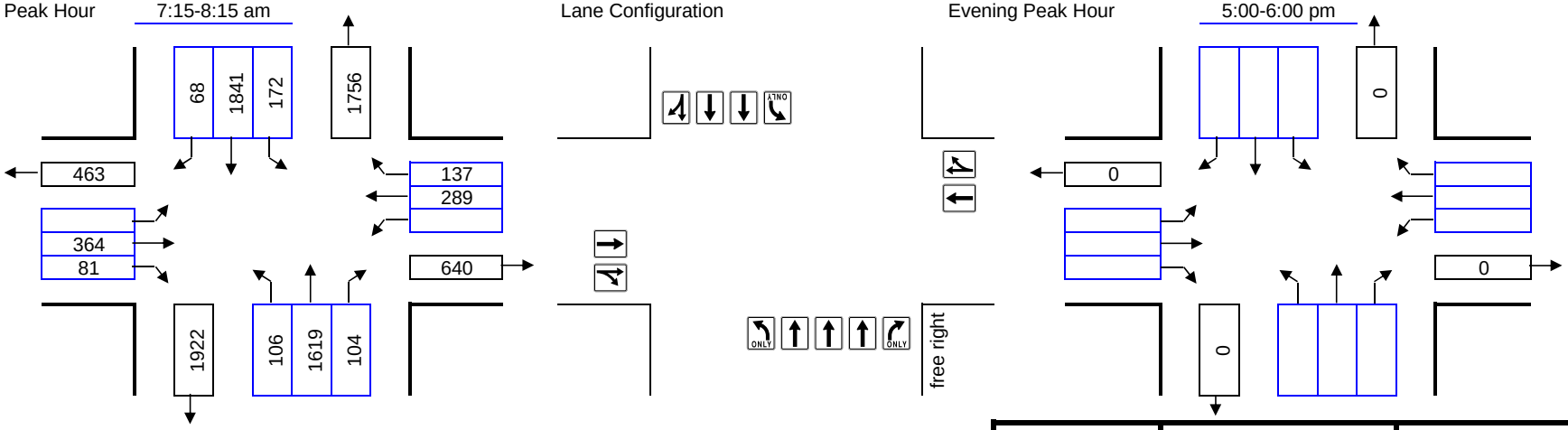

Right Turns Subtracted for Exclusive Right Turn Overlap Phasing or Right Turn on Red:

	AM	PM
NB Approach:	NB	NB
SB Approach:	SB	SB
EB Approach:	EB	EB
WB Approach:	WB	WB

Number of Lanes	Lane Use Factor		Opposing Volume (vph)		PCE
1 =	1.00	Congestion Standard	≤	199	1.1
2 =	0.53	= 1550	≤	599	2.0
3 =	0.37	for	≤	799	3.0
4 =	0.30	North Bethesda	≤	999	4.0
Dbl-left	0.60	Policy	≥	1000	5.0
		Area			

Movement	Volume	PCE	Lane Use Factor	Lane Volume	Opposing Lefts	Critical Lane Volume	*
NBT + SBL	1619	1.00	0.37	599	172	771	
SBTR + NBL	1909	1.00	0.37	706	106	812	*
EBTR	445	1.00	0.53	236	0	236	*
WBTR	426	1.00	0.53	226	0	226	
					Critical Volume	1048	OK
					V/C	0.68	

Movement	Volume	PCE	Lane Use Factor	Lane Volume	Opposing Lefts	Critical Lane Volume	*
					Critical Volume	0	OK
					V/C	0.00	

Maryland State Highway Administration
Turning Movement Summary and
Level of Service

Count Date:
Conditions: Existing
Design Year:

Location: MD 355 @ Bou Ave.

Computed By: JB Date: 4/3/14

Montgomery County Method

Morning Peak Hour 7:15-8:15 am

Lane Configuration

Evening Peak Hour 5:00-6:00 pm

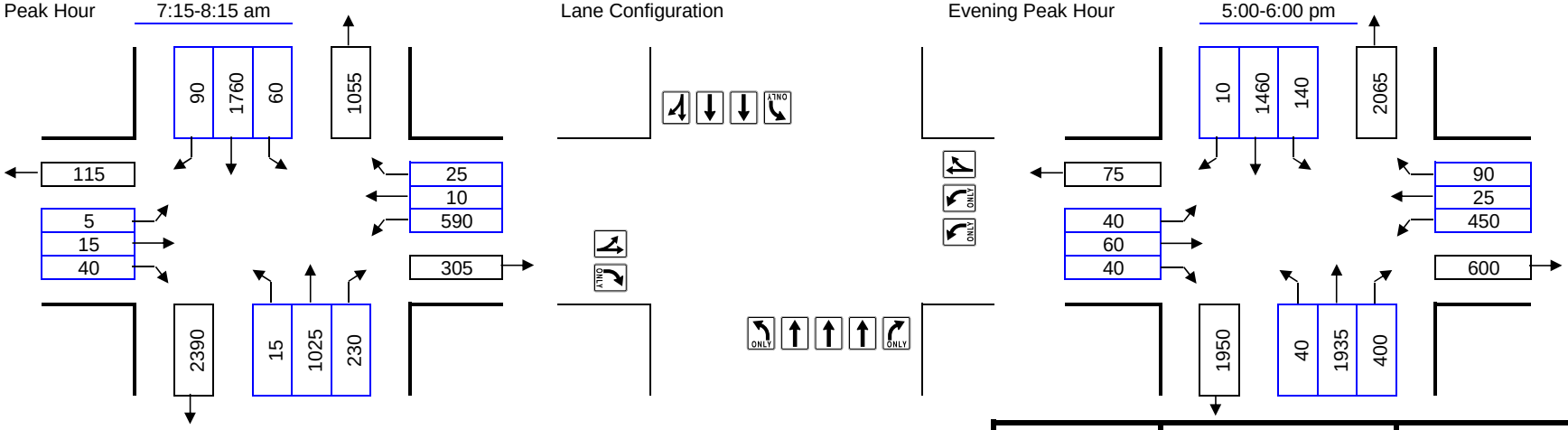

Right Turns Subtracted for Exclusive Right Turn Overlap Phasing or Right Turn on Red:

	AM		PM	
NB Approach:	NB		NB	
SB Approach:	SB		SB	
EB Approach:	EB	15	EB	
WB Approach:	WB		WB	

Number of Lanes	Lane Use Factor		Opposing Volume (vph)		PCE
1 =	1.00	Congestion Standard	≤	199	1.1
2 =	0.53	= 1550	≤	599	2.0
3 =	0.37	for	≤	799	3.0
4 =	0.30	North Bethesda	≤	999	4.0
Dbl-left	0.60	Policy	≥	1000	5.0
		Area			

Movement	Volume	PCE	Lane Use Factor	Lane Volume	Opposing Lefts	Critical Lane Volume	*
NBT + SBL	1025	1.00	0.37	379	60	439	
SBTR + NBL	1850	1.00	0.37	685	15	700	*
EBR + WBL	25	1.10	1.00	25	354	379	*
WBTR + EBL	35	1.00	1.00	35	5	40	
					Critical Volume	1079	OK
					V/C	0.70	

Movement	Volume	PCE	Lane Use Factor	Lane Volume	Opposing Lefts	Critical Lane Volume	*
NBT + SBL	1935	1.00	0.37	716	140	856	*
SBTR + NBL	1470	1.00	0.37	544	40	584	
EBLT + WBL	100	1.10	1.00	104	270	374	*
WBTR + EBL	115	1.00	1.00	115	40	155	
					Critical Volume	1230	OK
					V/C	0.79	

Maryland State Highway Administration
Turning Movement Summary and
Level of Service

Count Date:
Conditions: Existing Saturday
Design Year:

Location: MD 355 @ Bou Ave.
Computed By: JB
Date: 1/25/13

Montgomery County Method

Morning Peak Hour 7:15-8:15 am

Lane Configuration

Evening Peak Hour 5:00-6:00 pm

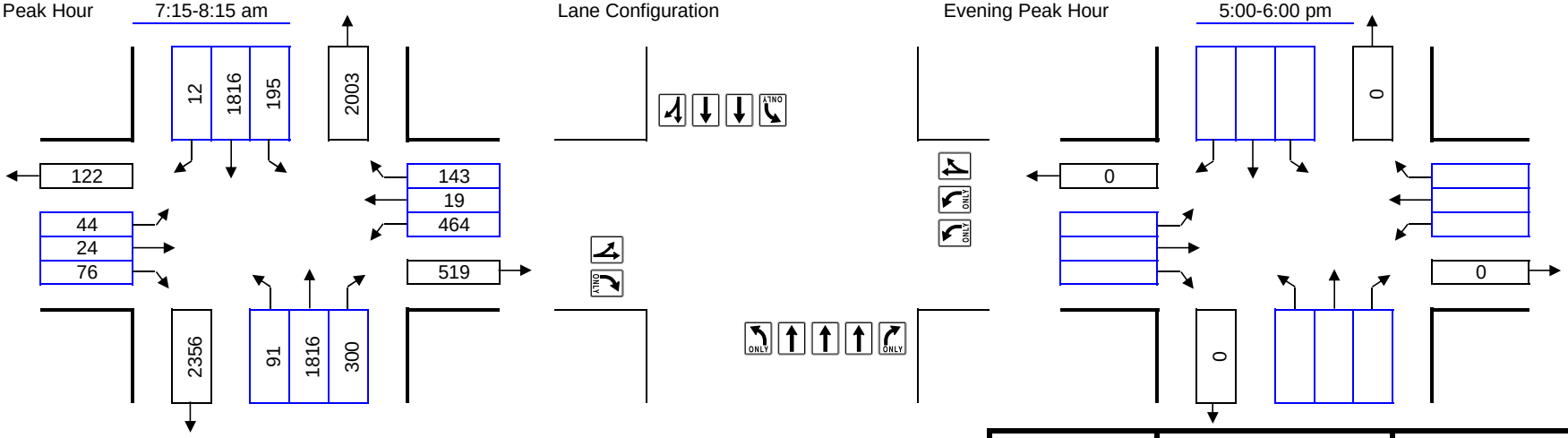

Right Turns Subtracted for Exclusive Right Turn
Overlap Phasing or Right Turn on Red:

	AM	PM
NB Approach:	NB	NB
SB Approach:	SB	SB
EB Approach:	EB	EB
WB Approach:	WB	WB

Number of Lanes	Lane Use Factor
1 =	1.00
2 =	0.53
3 =	0.37
4 =	0.30
Dbl-left	0.60

Congestion Standard = 1550 for North Bethesda Policy Area

Opposing Volume (vph)		PCE
≤	199	1.1
≤	599	2.0
≤	799	3.0
≤	999	4.0
≥	1000	5.0

Movement	Volume	PCE	Lane Use Factor	Lane Volume	Opposing Lefts	Critical Lane Volume	*
NBT + SBL	1816	1.00	0.37	672	195	867	*
SBTR + NBL	1828	1.00	0.37	676	91	767	
EBR + WBL	76	1.10	1.00	76	278	354	*
WBTR + EBL	162	1.00	1.00	162	44	206	
					Critical Volume	1221	OK
					V/C	0.79	

Movement	Volume	PCE	Lane Use Factor	Lane Volume	Opposing Lefts	Critical Lane Volume	*
					Critical Volume	0	OK
					V/C	0.00	

Maryland State Highway Administration
Turning Movement Summary and
Level of Service

Count Date:
Conditions: Existing
Design Year:

Location: MD 355 @ Hubbard Dr.
Computed By: JB
Date: 1/25/13

Montgomery County Method

Morning Peak Hour 7:15-8:15 am

Lane Configuration

Evening Peak Hour 5:00-6:00 pm

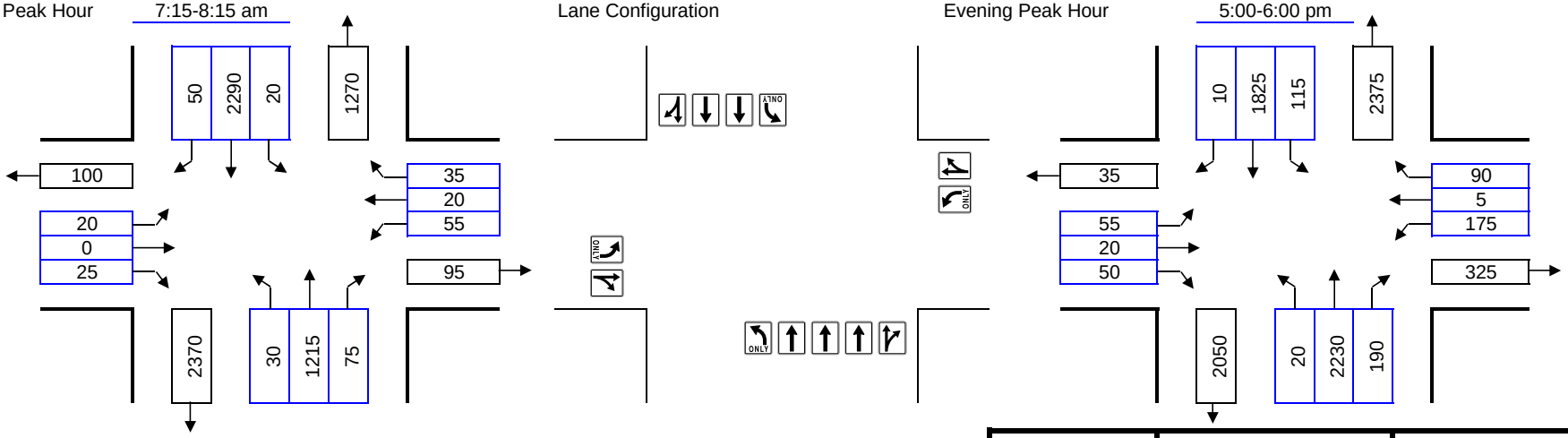

Right Turns Subtracted for Exclusive Right Turn
Overlap Phasing or Right Turn on Red:

	AM	PM
NB Approach:	NB	NB
SB Approach:	SB	SB
EB Approach:	EB	EB
WB Approach:	WB	WB

Number of Lanes	Lane Use Factor
1 =	1.00
2 =	0.53
3 =	0.37
4 =	0.30
Dbl-left	0.60

Congestion Standard = 1550 for North Bethesda Policy Area

Opposing Volume (vph)		PCE
≤	199	1.1
≤	599	2.0
≤	799	3.0
≤	999	4.0
≥	1000	5.0

Movement	Volume	PCE	Lane Use Factor	Lane Volume	Opposing Lefts	Critical Lane Volume	*
NBTR + SBL	1290	1.00	0.30	387	20	407	
SBTR + NBL	2340	1.00	0.37	866	30	896	*
EBTR + WBL	25	1.00	1.00	25	55	80	*
WBTR + EBL	55	1.00	1.00	55	20	75	
					Critical Volume	976	OK
					V/C	0.63	

Movement	Volume	PCE	Lane Use Factor	Lane Volume	Opposing Lefts	Critical Lane Volume	*
NBTR + SBL	2420	1.00	0.30	726	115	841	*
SBTR + NBL	1835	1.00	0.37	679	20	699	
EBTR + WBL	70	1.00	1.00	70	175	245	*
WBTR + EBL	95	1.00	1.00	95	55	150	
					Critical Volume	1086	OK
					V/C	0.70	

Maryland State Highway Administration
Turning Movement Summary and
Level of Service

Count Date:
Conditions: Existing Saturday
Design Year:

Location: MD 355 @ Hubbard Dr.
Computed By: JB
Date: 1/25/13

Montgomery County Method

Morning Peak Hour 7:15-8:15 am

Lane Configuration

Evening Peak Hour 5:00-6:00 pm

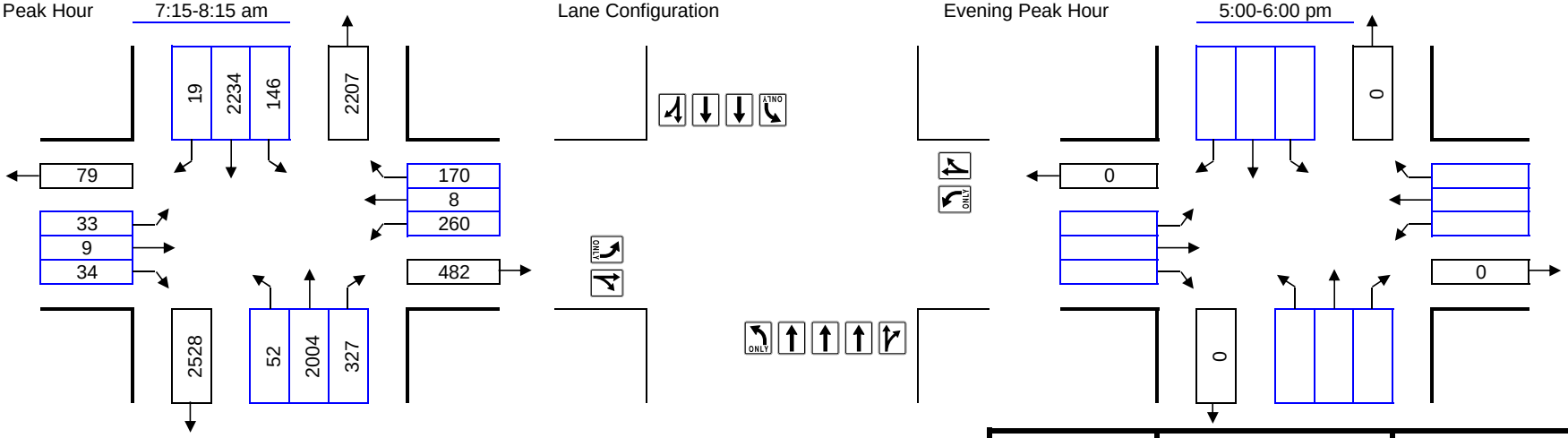

Right Turns Subtracted for Exclusive Right Turn Overlap Phasing or Right Turn on Red:

	AM	PM
NB Approach:	NB	NB
SB Approach:	SB	SB
EB Approach:	EB	EB
WB Approach:	WB	WB

Number of Lanes	Lane Use Factor
1 =	1.00
2 =	0.53
3 =	0.37
4 =	0.30
Dbl-left	0.60

Congestion Standard = 1550 for North Bethesda Policy Area

Opposing Volume (vph)		PCE
≤	199	1.1
≤	599	2.0
≤	799	3.0
≤	999	4.0
≥	1000	5.0

Movement	Volume	PCE	Lane Use Factor	Lane Volume	Opposing Lefts	Critical Lane Volume	*
NBTR + SBL	2331	1.00	0.30	699	146	845	
SBTR + NBL	2253	1.00	0.37	834	52	886	*
EBTR + WBL	43	1.00	1.00	43	260	303	*
WBTR + EBL	178	1.00	1.00	178	33	211	
					Critical Volume	1189	OK
					V/C	0.77	

Movement	Volume	PCE	Lane Use Factor	Lane Volume	Opposing Lefts	Critical Lane Volume	*
					Critical Volume	0	OK
					V/C	0.00	

Maryland State Highway Administration
Turning Movement Summary and
Level of Service

Count Date:
Conditions: Existing
Design Year:

Location: Montrose Pkwy. @ MD 355 NB On Ramp

Computed By: JB Date: 1/25/13

Montgomery County Method

Morning Peak Hour 7:15-8:15 am

Lane Configuration

Evening Peak Hour 5:00-6:00 pm

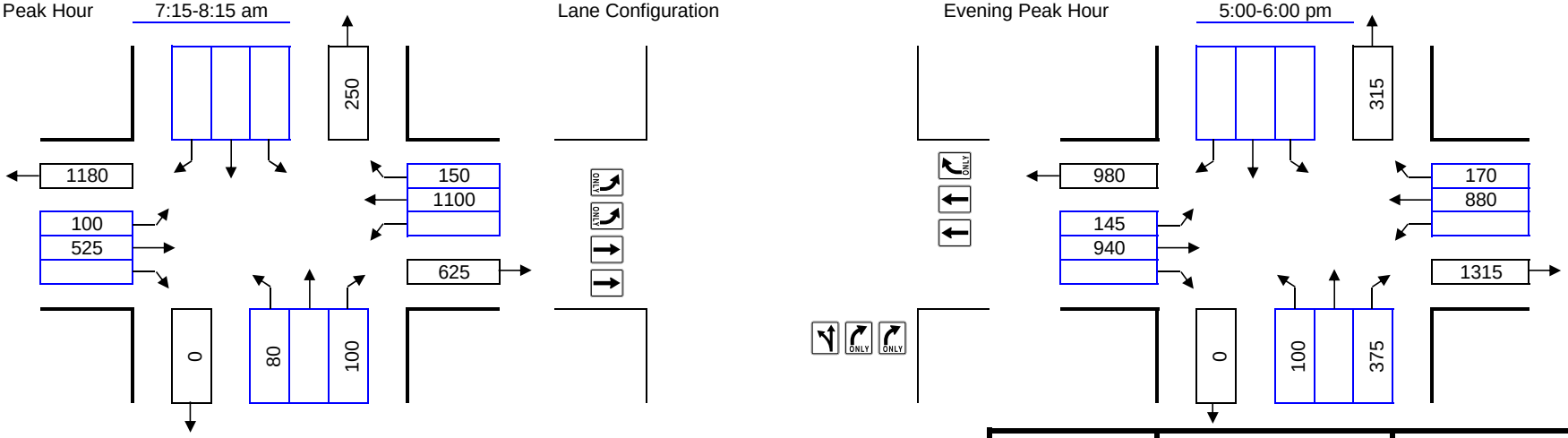

Right Turns Subtracted for Exclusive Right Turn Overlap Phasing or Right Turn on Red:

	AM	PM
NB Approach:	NB	NB
SB Approach:	SB	SB
EB Approach:	EB	EB
WB Approach:	WB	WB

Number of Lanes	Lane Use Factor
1 =	1.00
2 =	0.53
3 =	0.37
4 =	0.30
Dbl-left	0.60

Congestion Standard = 1800 for White Flint Policy Area

Opposing Volume (vph)		PCE
≤	199	1.1
≤	599	2.0
≤	799	3.0
≤	999	4.0
≥	1000	5.0

Movement	Volume	PCE	Lane Use Factor	Lane Volume	Opposing Lefts	Critical Lane Volume	*
NBLT	80	1.00	1.00	80	0	80	*
EBT	525	1.00	0.53	278	0	278	
WBT + EBL	1100	1.00	0.53	583	60	643	*
					Critical Volume	723	OK
					V/C	0.40	

Movement	Volume	PCE	Lane Use Factor	Lane Volume	Opposing Lefts	Critical Lane Volume	*
NBR	375	1.00	0.53	199	0	199	*
EBT	940	1.00	0.53	498	0	498	
WBT + EBL	880	1.00	0.53	466	87	553	*
				Critical Volume		752	OK
				V/C		0.42	

Maryland State Highway Administration
Turning Movement Summary and
Level of Service

Count Date:
Conditions: Existing Saturday
Design Year:

Location: Montrose Pkwy. @ MD 355 NB On Ramp

Computed By: JB Date: 1/25/13

Montgomery County Method

Morning Peak Hour 7:15-8:15 am

Lane Configuration

Evening Peak Hour 5:00-6:00 pm

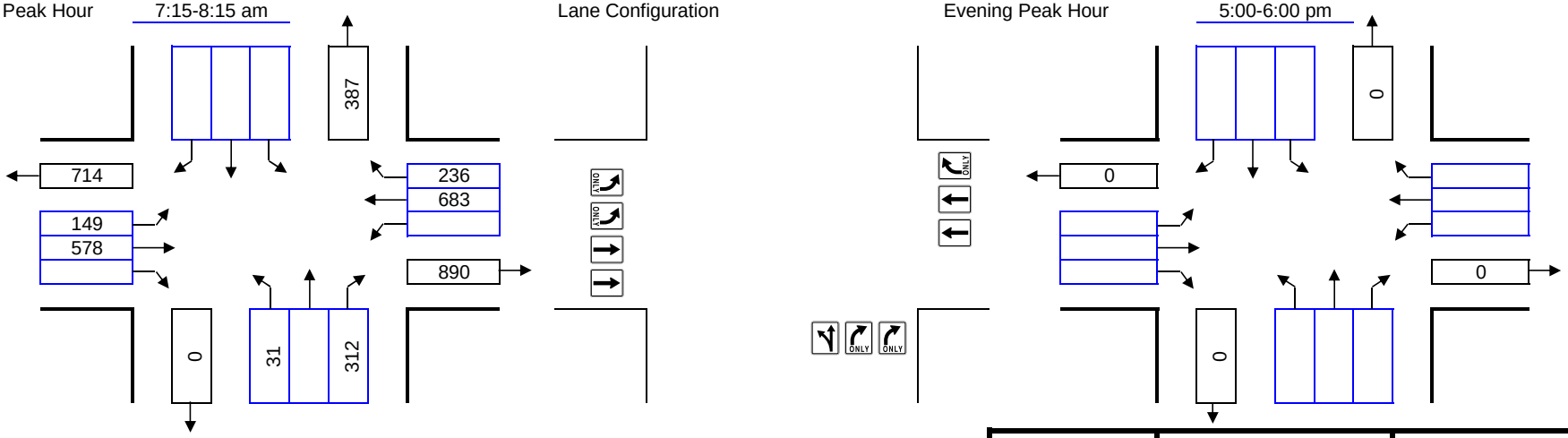

Right Turns Subtracted for Exclusive Right Turn Overlap Phasing or Right Turn on Red:

	AM	PM
NB Approach:	NB	NB
SB Approach:	SB	SB
EB Approach:	EB	EB
WB Approach:	WB	WB

Number of Lanes	Lane Use Factor
1 =	1.00
2 =	0.53
3 =	0.37
4 =	0.30
Dbl-left	0.60

Congestion Standard = 1800 for White Flint Policy Area

Opposing Volume (vph)		PCE
≤	199	1.1
≤	599	2.0
≤	799	3.0
≤	999	4.0
≥	1000	5.0

Movement	Volume	PCE	Lane Use Factor	Lane Volume	Opposing Lefts	Critical Lane Volume	*
NBR	312	1.00	0.53	165	0	165	*
EBT	578	1.00	0.53	306	0	306	
WBT + EBL	683	1.00	0.53	362	89	451	*
					Critical Volume	616	OK
					V/C	0.34	

Movement	Volume	PCE	Lane Use Factor	Lane Volume	Opposing Lefts	Critical Lane Volume	*
					Critical Volume	0	OK
					V/C	0.00	

Maryland State Highway Administration
Turning Movement Summary and
Level of Service

Count Date:
Conditions: Existing
Design Year:

Location: MD 355 @ Old Georgetown Road
Computed By: JB
Date: 1/25/13

Montgomery County Method

Morning Peak Hour 7:15-8:15 am

Lane Configuration

Evening Peak Hour 5:00-6:00 pm

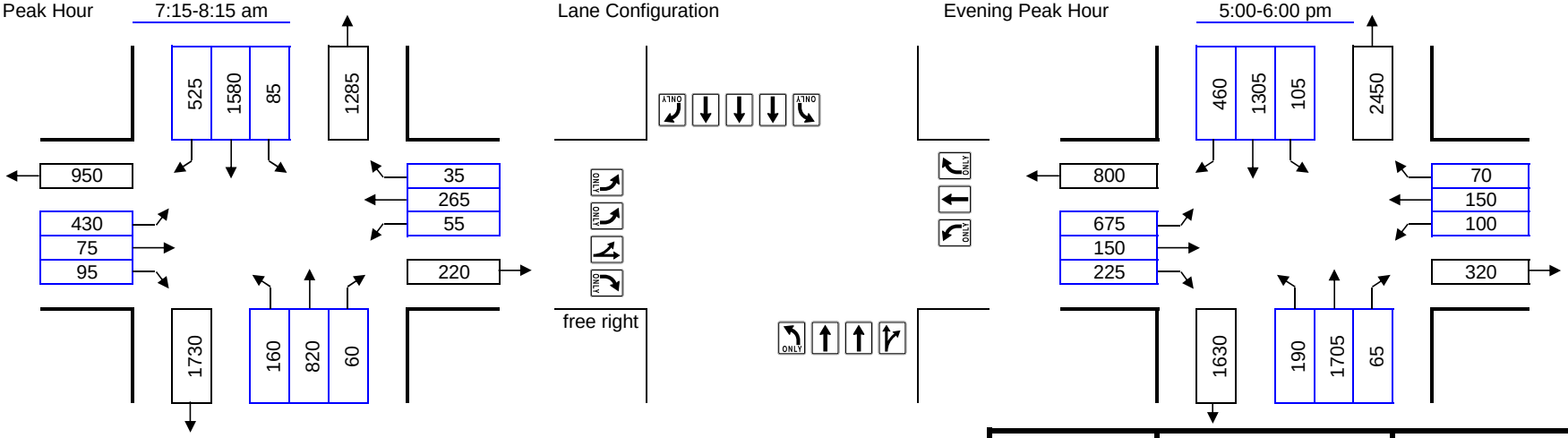

Right Turns Subtracted for Exclusive Right Turn
Overlap Phasing or Right Turn on Red:

	AM	PM
NB Approach:	NB	NB
SB Approach:	SB	SB
EB Approach:	EB	EB
WB Approach:	WB	WB

Number of Lanes	Lane Use Factor
1 =	1.00
2 =	0.53
3 =	0.37
4 =	0.30
Dbl-left	0.60

Congestion Standard = 1800 for White Flint Policy Area

Opposing Volume (vph)		PCE
≤	199	1.1
≤	599	2.0
≤	799	3.0
≤	999	4.0
≥	1000	5.0

Movement	Volume	PCE	Lane Use Factor	Lane Volume	Opposing Lefts	Critical Lane Volume	*
NBTR + SBL	880	1.00	0.37	326	85	411	
SBT + NBL	1580	1.00	0.37	585	160	745	*
EBLT + WBL	505	2.00	0.37	346	55	401	
WBT + EBL	265	1.00	1.00	265	172	437	*
					Critical Volume	1182	OK
					V/C	0.66	

Movement	Volume	PCE	Lane Use Factor	Lane Volume	Opposing Lefts	Critical Lane Volume	*
NBTR + SBL	1770	1.00	0.37	655	105	760	*
SBT + NBL	1305	1.00	0.37	483	190	673	
EBLT + WBL	825	2.00	0.37	555	100	655	*
WBT + EBL	150	1.00	1.00	150	270	420	
					Critical Volume	1415	OK
					V/C	0.79	

Maryland State Highway Administration
Turning Movement Summary and
Level of Service

Count Date:
Conditions: Existing Saturday
Design Year:

Location: MD 355 @ Old Georgetown Road

Computed By: JB Date: 4/3/14

Montgomery County Method

Morning Peak Hour 7:00-8:00 am

Lane Configuration

Evening Peak Hour 5:00-6:00 pm

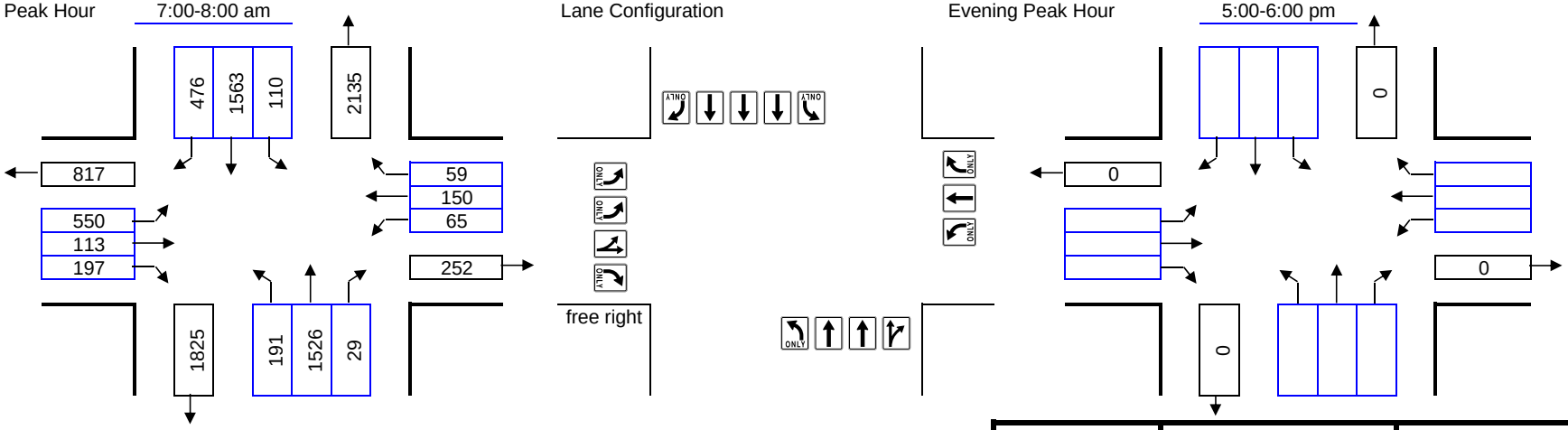

Right Turns Subtracted for Exclusive Right Turn Overlap Phasing or Right Turn on Red:

	AM	PM
NB Approach:	NB	NB
SB Approach:	SB	SB
EB Approach:	EB	EB
WB Approach:	WB	WB

Number of Lanes	Lane Use Factor		Opposing Volume (vph)		PCE
1 =	1.00	Congestion Standard	≤	199	1.1
2 =	0.53	= 1800	≤	599	2.0
3 =	0.37	for	≤	799	3.0
4 =	0.30	White Flint	≤	999	4.0
Dbl-left	0.60	Policy Area	≥	1000	5.0

Movement	Volume	PCE	Lane Use Factor	Lane Volume	Opposing Lefts	Critical Lane Volume	*
NBTR + SBL	1555	1.00	0.37	575	110	685	
SBT + NBL	1563	1.00	0.37	578	191	769	*
EBLT + WBL	663	2.00	0.37	449	65	514	*
WBT + EBL	150	1.00	1.00	150	220	370	
					Critical Volume	1283	OK
					V/C	0.71	

Movement	Volume	PCE	Lane Use Factor	Lane Volume	Opposing Lefts	Critical Lane Volume	*
					Critical Volume	0	OK
					V/C	0.00	

Maryland State Highway Administration
Turning Movement Summary and
Level of Service

Count Date:
Conditions: Existing
Design Year:

Location: MD 355 @ Marinelli Rd
Computed By: JB
Date: 1/25/13

Montgomery County Method

Morning Peak Hour 7:00-8:00 am

Lane Configuration

Evening Peak Hour 5:00-6:00 pm

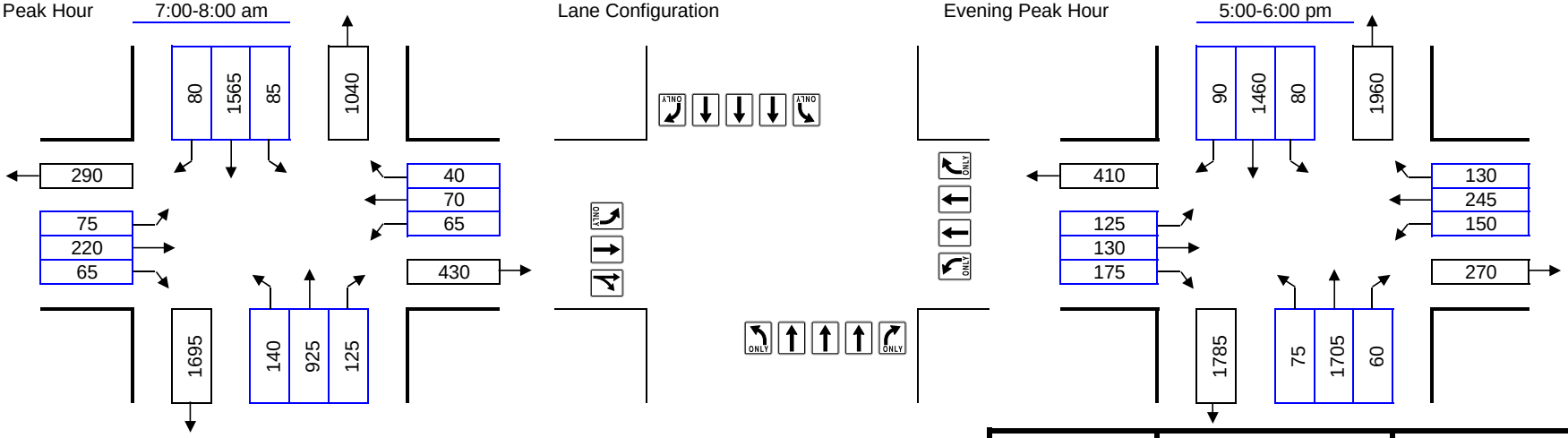

Right Turns Subtracted for Exclusive Right Turn
Overlap Phasing or Right Turn on Red:

	AM	PM
NB Approach:	NB	NB
SB Approach:	SB	SB
EB Approach:	EB	EB
WB Approach:	WB	WB

Number of Lanes	Lane Use Factor
1 =	1.00
2 =	0.53
3 =	0.37
4 =	0.30
Dbl-left	0.60

Congestion Standard = 1800 for White Flint Policy Area

Opposing Volume (vph)		PCE
≤	199	1.1
≤	599	2.0
≤	799	3.0
≤	999	4.0
≥	1000	5.0

Movement	Volume	PCE	Lane Use Factor	Lane Volume	Opposing Lefts	Critical Lane Volume	*
NBT + SBL	925	1.00	0.37	342	85	427	
SBT + NBL	1565	1.00	0.37	579	140	719	*
EBTR + WBL	285	1.00	0.53	151	65	216	*
WBR + EBL	40	1.00	1.00	40	75	115	
					Critical Volume	935	OK
					V/C	0.52	

Movement	Volume	PCE	Lane Use Factor	Lane Volume	Opposing Lefts	Critical Lane Volume	*
NBT + SBL	1705	1.00	0.37	631	80	711	*
SBT + NBL	1460	1.00	0.37	540	75	615	
EBR + WBL	175	1.00	1.00	175	150	325	*
WBT + EBL	245	1.00	0.53	130	125	255	
					Critical Volume	1036	OK
					V/C	0.58	

De facto RT lane(s) assumed for EB approach.

Maryland State Highway Administration
Turning Movement Summary and
Level of Service

Count Date:
Conditions: Existing Saturday
Design Year:

Location: MD 355 @ Marinelli Rd

Computed By: JB Date: 4/3/14

Montgomery County Method

Morning Peak Hour 7:00-8:00 am

Lane Configuration

Evening Peak Hour 5:00-6:00 pm

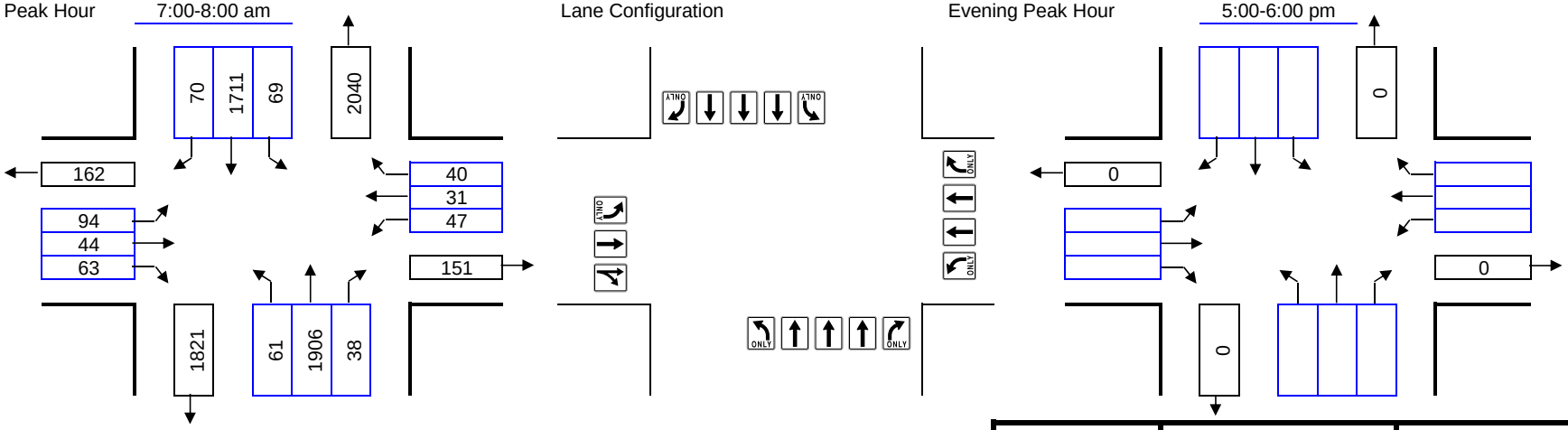

Right Turns Subtracted for Exclusive Right Turn Overlap Phasing or Right Turn on Red:

	AM	PM
NB Approach:	NB	NB
SB Approach:	SB	SB
EB Approach:	EB	EB
WB Approach:	WB 40	WB

Number of Lanes	Lane Use Factor		Opposing Volume (vph)	PCE
1 =	1.00	Congestion Standard	≤ 199	1.1
2 =	0.53	= 1800	≤ 599	2.0
3 =	0.37	for	≤ 799	3.0
4 =	0.30	White Flint	≤ 999	4.0
Dbl-left	0.60	Policy	≥ 1000	5.0
		Area		

Movement	Volume	PCE	Lane Use Factor	Lane Volume	Opposing Lefts	Critical Lane Volume	*
NBT + SBL	1906	1.00	0.37	705	69	774	*
SBT + NBL	1711	1.00	0.37	633	61	694	
EBR + WBL	63	1.00	1.00	63	47	110	*
WBT + EBL	31	1.00	0.53	16	94	110	
					Critical Volume	884	OK
					V/C	0.49	

De facto RT lane(s) assumed for EB approach.

Movement	Volume	PCE	Lane Use Factor	Lane Volume	Opposing Lefts	Critical Lane Volume	*
					Critical Volume	0	OK
					V/C	0.00	

Maryland State Highway Administration
Turning Movement Summary and
Level of Service

Count Date:
Conditions: Existing
Design Year:

Location: MD 355 @ Nicholson Ln
Computed By: JB
Date: 1/25/13

Montgomery County Method

Morning Peak Hour 7:00-8:00 am

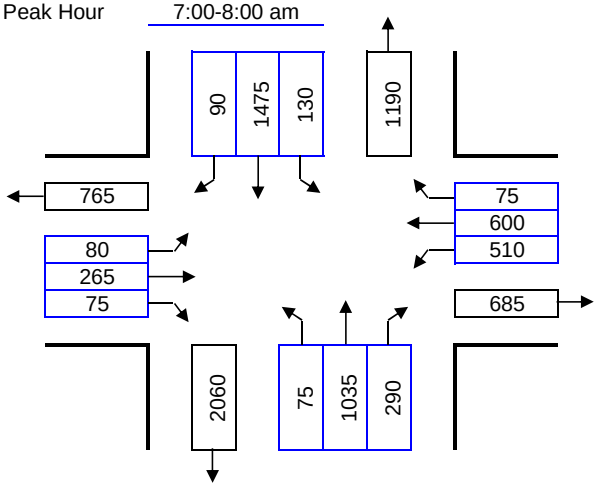

Lane Configuration

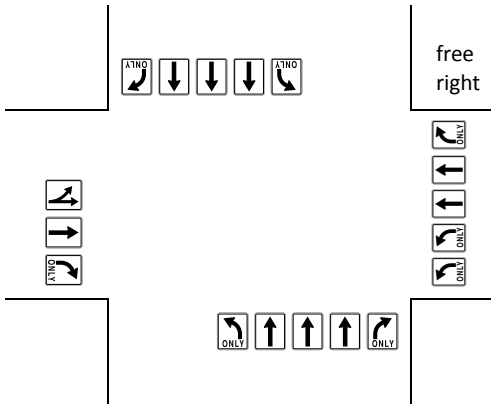

Evening Peak Hour 5:00-6:00 pm

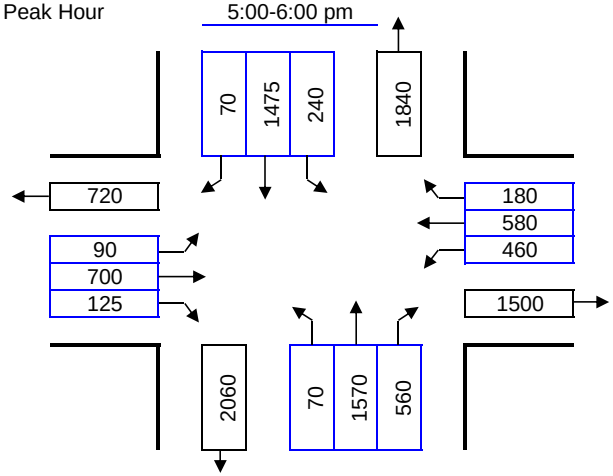

Right Turns Subtracted for Exclusive Right Turn Overlap Phasing or Right Turn on Red:

	AM	PM
NB Approach:	NB	NB
SB Approach:	SB	SB
EB Approach:	EB	EB
WB Approach:	WB	WB

Number of Lanes	Lane Use Factor
1 =	1.00
2 =	0.53
3 =	0.37
4 =	0.30
Dbl-left	0.60

Congestion Standard = 1800 for White Flint Policy Area

Opposing Volume (vph)		PCE
≤	199	1.1
≤	599	2.0
≤	799	3.0
≤	999	4.0
≥	1000	5.0

Movement	Volume	PCE	Lane Use Factor	Lane Volume	Opposing Lefts	Critical Lane Volume	*
NBT + SBL	1035	1.00	0.37	383	130	513	
SBT + NBL	1475	1.00	0.37	546	75	621	*
EBLT + WBL	345	1.00	0.53	183	306	489	*
WBT + EBL	600	1.00	0.53	318	80	398	
					Critical Volume	1110	OK
					V/C	0.62	

Movement	Volume	PCE	Lane Use Factor	Lane Volume	Opposing Lefts	Critical Lane Volume	*
NBT + SBL	1570	1.00	0.37	581	240	821	*
SBT + NBL	1475	1.00	0.37	546	70	616	
EBLT + WBL	790	1.00	0.53	419	276	695	*
WBT + EBL	580	1.00	0.53	307	90	397	
					Critical Volume	1516	OK
					V/C	0.84	

Maryland State Highway Administration
Turning Movement Summary and
Level of Service

Count Date:
Conditions: Existing Saturday
Design Year:

Location: MD 355 @ Nicholson Ln
Computed By: JB
Date: 1/25/13

Montgomery County Method

Morning Peak Hour 7:00-8:00 am

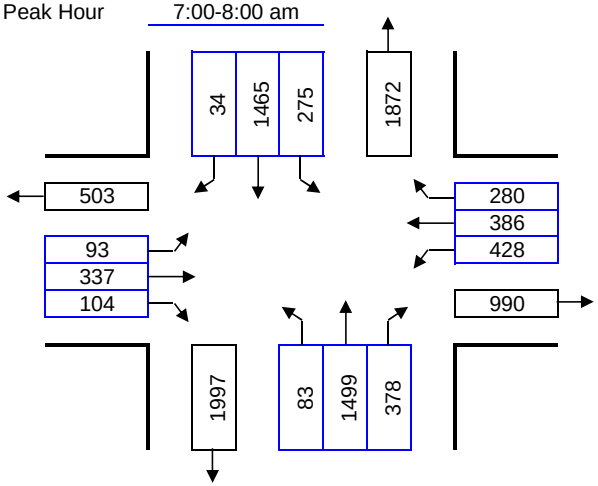

Lane Configuration

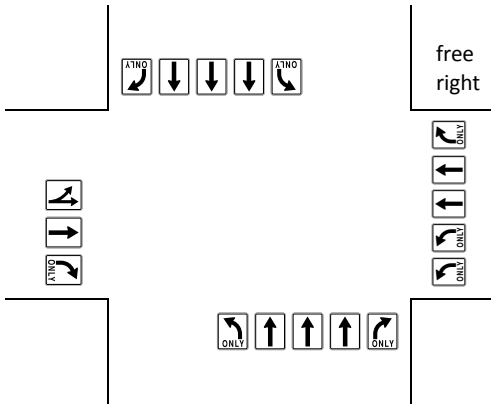

Evening Peak Hour 5:00-6:00 pm

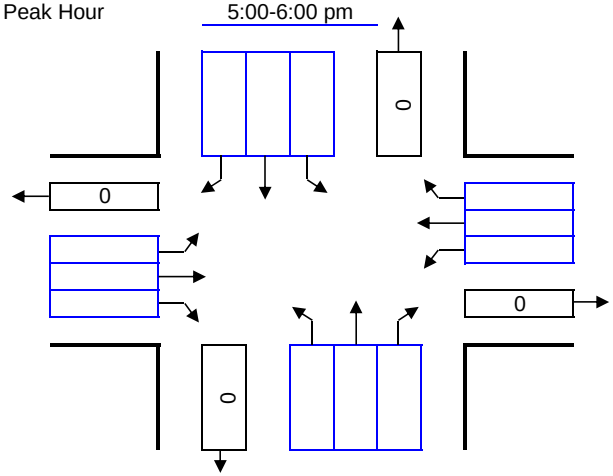

Right Turns Subtracted for Exclusive Right Turn Overlap Phasing or Right Turn on Red:

	AM	PM
NB Approach:	NB	NB
SB Approach:	SB	SB
EB Approach:	EB	EB
WB Approach:	WB	WB

Number of Lanes	Lane Use Factor
1 =	1.00
2 =	0.53
3 =	0.37
4 =	0.30
Dbl-left	0.60

Congestion Standard = 1800 for White Flint Policy Area

Opposing Volume (vph)		PCE
≤	199	1.1
≤	599	2.0
≤	799	3.0
≤	999	4.0
≥	1000	5.0

Movement	Volume	PCE	Lane Use Factor	Lane Volume	Opposing Lefts	Critical Lane Volume	*
NBT + SBL	1499	1.00	0.37	555	275	830	*
SBT + NBL	1465	1.00	0.37	542	83	625	
EBLT + WBL	430	1.00	0.53	228	257	485	*
WBR + EBL	280	1.00	1.00	280	93	373	
					Critical Volume	1315	OK
					V/C	0.73	

Movement	Volume	PCE	Lane Use Factor	Lane Volume	Opposing Lefts	Critical Lane Volume	*
					Critical Volume	0	OK
					V/C	0.00	

Maryland State Highway Administration
Turning Movement Summary and
Level of Service

Count Date:
Conditions: Existing
Design Year:

Location: MD 355 @ Security La.
Computed By: JB
Date: 1/25/13

Montgomery County Method

Morning Peak Hour 7:15-8:15 am

Lane Configuration

Evening Peak Hour 5:00-6:00 pm

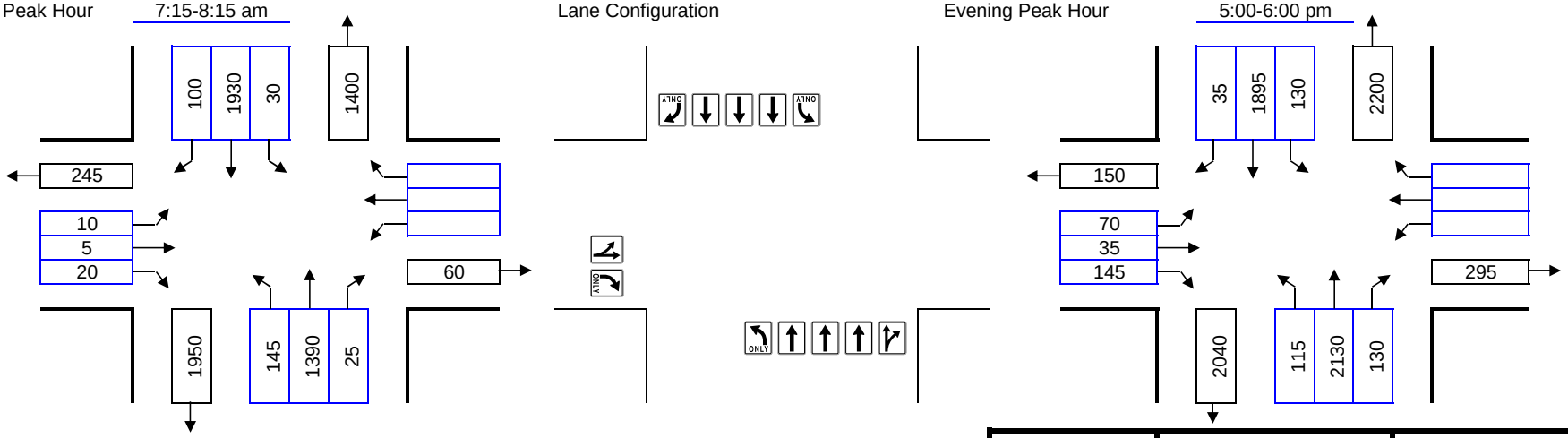

Right Turns Subtracted for Exclusive Right Turn Overlap Phasing or Right Turn on Red:

	AM		PM	
NB Approach:	NB		NB	
SB Approach:	SB		SB	
EB Approach:	EB	20	EB	115
WB Approach:	WB		WB	

Number of Lanes	Lane Use Factor
1 =	1.00
2 =	0.53
3 =	0.37
4 =	0.30
Dbl-left	0.60

Congestion Standard = 1800 for White Flint Policy Area

Opposing Volume (vph)		PCE
≤	199	1.1
≤	599	2.0
≤	799	3.0
≤	999	4.0
≥	1000	5.0

Movement	Volume	PCE	Lane Use Factor	Lane Volume	Opposing Lefts	Critical Lane Volume	*
NBTR + SBL	1415	1.00	0.30	425	30	455	
SBT + NBL	1930	1.00	0.37	714	145	859	*
EBLT	15	1.00	1.00	15	0	15	*
					Critical Volume	874	OK
					V/C	0.49	

Movement	Volume	PCE	Lane Use Factor	Lane Volume	Opposing Lefts	Critical Lane Volume	*
NBTR + SBL	2260	1.00	0.30	678	130	808	
SBT + NBL	1895	1.00	0.37	701	115	816	*
EBLT	105	1.00	1.00	105	0	105	*
					Critical Volume	921	OK
					V/C	0.51	

Maryland State Highway Administration
Turning Movement Summary and
Level of Service

Count Date:
Conditions: Existing Saturday
Design Year:

Location: MD 355 @ Security La.
Computed By: JB
Date: 1/25/13

Montgomery County Method

Morning Peak Hour 7:15-8:15 am

Lane Configuration

Evening Peak Hour 5:00-6:00 pm

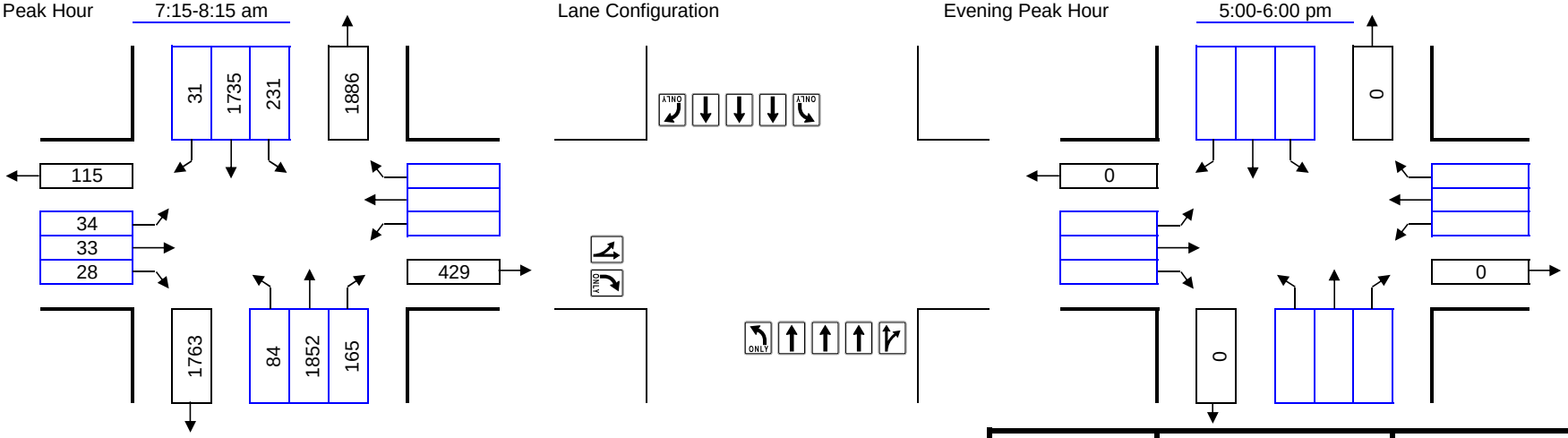

Right Turns Subtracted for Exclusive Right Turn Overlap Phasing or Right Turn on Red:

	AM	PM
NB Approach:	NB	NB
SB Approach:	SB	SB
EB Approach:	EB	EB
WB Approach:	WB	WB

Number of Lanes	Lane Use Factor
1 =	1.00
2 =	0.53
3 =	0.37
4 =	0.30
Dbl-left	0.60

Congestion Standard = 1800 for White Flint Policy Area

Opposing Volume (vph)		PCE
≤	199	1.1
≤	599	2.0
≤	799	3.0
≤	999	4.0
≥	1000	5.0

Movement	Volume	PCE	Lane Use Factor	Lane Volume	Opposing Lefts	Critical Lane Volume	*
NBTR + SBL	2017	1.00	0.30	605	231	836	*
SBT + NBL	1735	1.00	0.37	642	84	726	
EBLT	67	1.00	1.00	67	0	67	*
					Critical Volume	903	OK
					V/C	0.50	

Movement	Volume	PCE	Lane Use Factor	Lane Volume	Opposing Lefts	Critical Lane Volume	*
					Critical Volume	0	OK
					V/C	0.00	

Maryland State Highway Administration
Turning Movement Summary and
Level of Service

Count Date:
Conditions: Existing
Design Year:

Location: MD 355 @ Edson La.
Computed By: JB
Date: 1/25/13

Montgomery County Method

Morning Peak Hour 7:15-8:15 am

Lane Configuration

Evening Peak Hour 5:00-6:00 pm

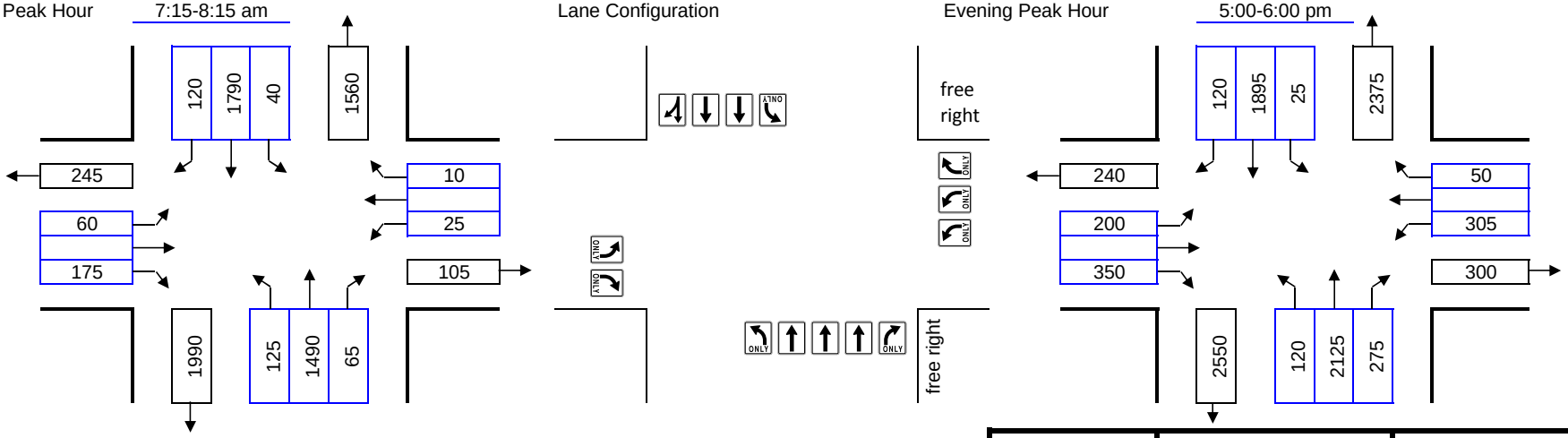

Right Turns Subtracted for Exclusive Right Turn
Overlap Phasing or Right Turn on Red:

	AM	PM
NB Approach:	NB	NB
SB Approach:	SB	SB
EB Approach:	EB 125	EB 120
WB Approach:	WB	WB

Number of Lanes	Lane Use Factor
1 =	1.00
2 =	0.53
3 =	0.37
4 =	0.30
Dbl-left	0.60

Congestion Standard = 1800 for White Flint Policy Area

Opposing Volume (vph)		PCE
≤	199	1.1
≤	599	2.0
≤	799	3.0
≤	999	4.0
≥	1000	5.0

Movement	Volume	PCE	Lane Use Factor	Lane Volume	Opposing Lefts	Critical Lane Volume	*
NBT + SBL	1490	1.00	0.37	551	40	591	
SBTR + NBL	1910	1.00	0.37	707	125	832	*
EBR + WBL	50	1.00	1.00	50	15	65	
WBR + EBL	10	1.00	1.00	10	60	70	*
					Critical Volume	902	OK
					V/C	0.50	

Movement	Volume	PCE	Lane Use Factor	Lane Volume	Opposing Lefts	Critical Lane Volume	*
NBT + SBL	2125	1.00	0.37	786	25	811	
SBTR + NBL	2015	1.00	0.37	746	120	866	*
EBR + WBL	230	1.00	1.00	230	183	413	*
WBR + EBL	50	1.00	1.00	50	200	250	
					Critical Volume	1279	OK
					V/C	0.71	

Maryland State Highway Administration
Turning Movement Summary and
Level of Service

Count Date:
Conditions: Existing Saturday
Design Year:

Location: MD 355 @ Edson La.
Computed By: JB
Date: 1/25/13

Montgomery County Method

Morning Peak Hour 7:15-8:15 am

Lane Configuration

Evening Peak Hour 5:00-6:00 pm

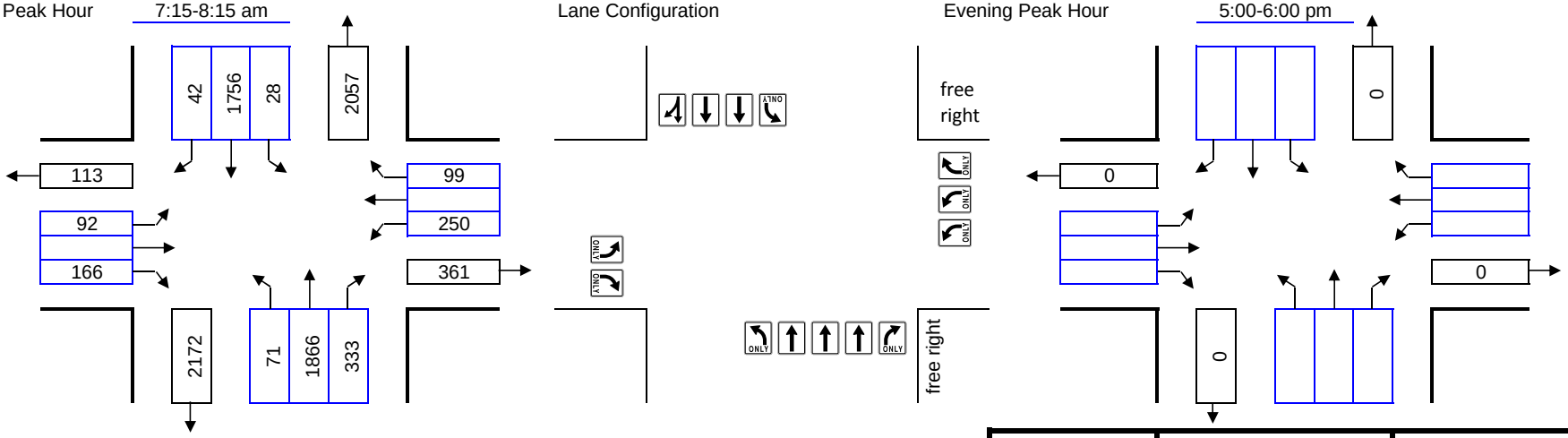

Right Turns Subtracted for Exclusive Right Turn
Overlap Phasing or Right Turn on Red:

	AM		PM	
NB Approach:	NB		NB	
SB Approach:	SB		SB	
EB Approach:	EB	71	EB	
WB Approach:	WB		WB	

Number of Lanes	Lane Use Factor
1 =	1.00
2 =	0.53
3 =	0.37
4 =	0.30
Dbl-left	0.60

Congestion Standard = 1800 for White Flint Policy Area

Opposing Volume (vph)		PCE
≤	199	1.1
≤	599	2.0
≤	799	3.0
≤	999	4.0
≥	1000	5.0

Movement	Volume	PCE	Lane Use Factor	Lane Volume	Opposing Lefts	Critical Lane Volume	*
NBT + SBL	1866	1.00	0.37	690	28	718	
SBTR + NBL	1798	1.00	0.37	665	71	736	*
EBR + WBL	95	1.00	1.00	95	150	245	*
WBR + EBL	99	1.00	1.00	99	92	191	
					Critical Volume	981	OK
					V/C	0.55	

Movement	Volume	PCE	Lane Use Factor	Lane Volume	Opposing Lefts	Critical Lane Volume	*
					Critical Volume	0	OK
					V/C	0.00	

Maryland State Highway Administration
Turning Movement Summary and
Level of Service

Count Date:
Conditions: Existing
Design Year:

Location: MD 355 @ MD 547/Hargett La.

Computed By: JB Date: 1/25/13

Montgomery County Method

Morning Peak Hour 7:00-8:00 am

Lane Configuration

Evening Peak Hour 5:00-6:00 pm

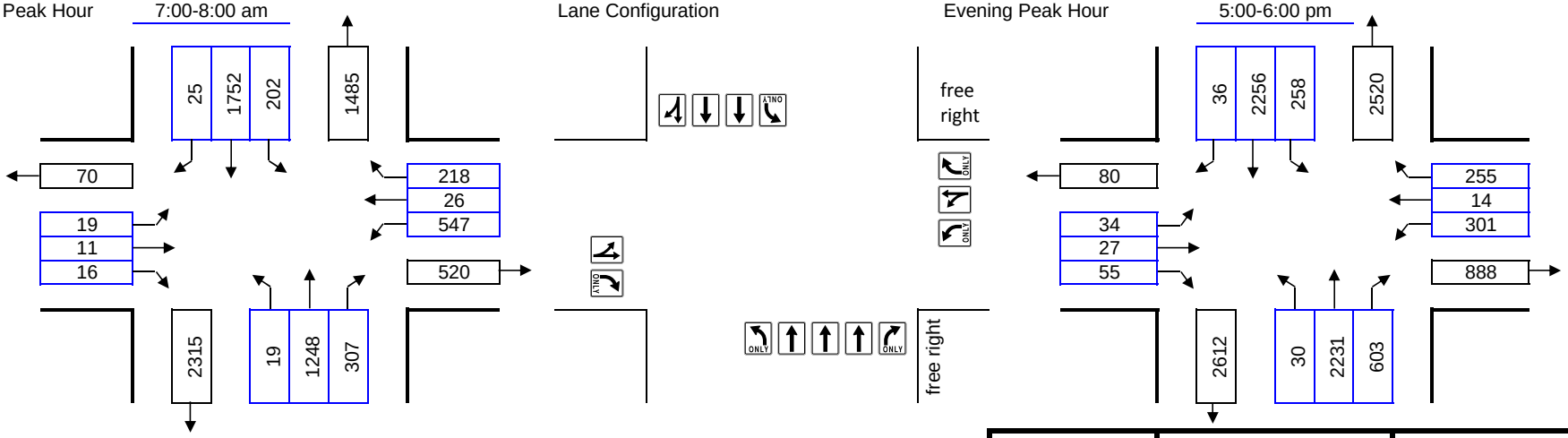

Right Turns Subtracted for Exclusive Right Turn Overlap Phasing or Right Turn on Red:

	AM	PM
NB Approach:	NB	NB
SB Approach:	SB	SB
EB Approach:	EB	EB
WB Approach:	WB	WB 255

Number of Lanes	Lane Use Factor
1 =	1.00
2 =	0.53
3 =	0.37
4 =	0.30
Dbl-left	0.60

Congestion Standard = 1800 for Grosvenor Policy Area

Opposing Volume (vph)		PCE
≤	199	1.1
≤	599	2.0
≤	799	3.0
≤	999	4.0
≥	1000	5.0

Movement	Volume	PCE	Lane Use Factor	Lane Volume	Opposing Lefts	Critical Lane Volume	*
NBT + SBL	1248	1.00	0.37	462	202	664	
SBTR + NBL	1777	1.00	0.37	657	19	676	*
EBLT + WBL	30	2.00	1.00	49	328	377	
WBLT + EBL	573	1.10	0.60	377	19	396	*
					Critical Volume	1072	OK
					V/C	0.60	

Movement	Volume	PCE	Lane Use Factor	Lane Volume	Opposing Lefts	Critical Lane Volume	*
NBT + SBL	2231	1.00	0.37	825	258	1083	*
SBTR + NBL	2292	1.00	0.37	848	30	878	
EBLT + WBL	61	1.10	1.00	64	181	245	*
WBLT + EBL	315	1.10	0.60	207	34	241	
					Critical Volume	1328	OK
					V/C	0.74	

Maryland State Highway Administration
Turning Movement Summary and
Level of Service

Count Date:
Conditions: Existing Saturday
Design Year:

Location: MD 355 @ MD 547/Hargett La.

Computed By: JB Date: 1/25/13

Montgomery County Method

Morning Peak Hour 7:00-8:00 am Lane Configuration Evening Peak Hour 5:00-6:00 pm

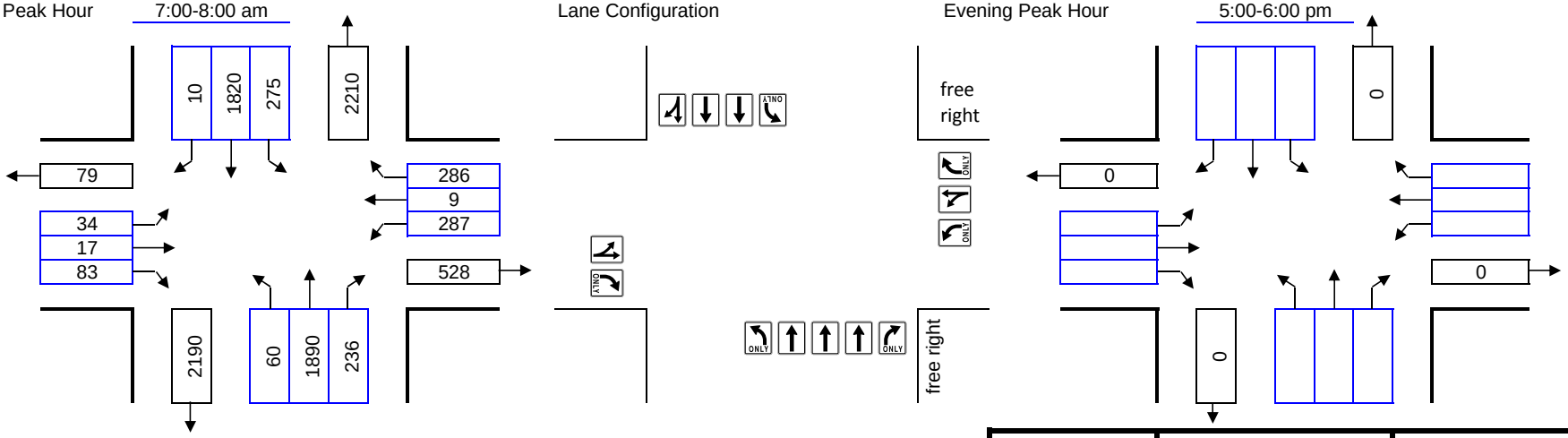

Right Turns Subtracted for Exclusive Right Turn Overlap Phasing or Right Turn on Red:

	AM		PM	
NB Approach:	NB		NB	
SB Approach:	SB		SB	
EB Approach:	EB		EB	
WB Approach:	WB	286	WB	

Number of Lanes	Lane Use Factor		Opposing Volume (vph)		PCE
1 =	1.00	Congestion Standard	≤	199	1.1
2 =	0.53	= 1800	≤	599	2.0
3 =	0.37	for	≤	799	3.0
4 =	0.30	Grosvenor	≤	999	4.0
Dbl-left	0.60	Policy Area	≥	1000	5.0

Movement	Volume	PCE	Lane Use Factor	Lane Volume	Opposing Lefts	Critical Lane Volume	*
NBT + SBL	1890	1.00	0.37	699	275	974	*
SBTR + NBL	1830	1.00	0.37	677	60	737	
EBR + WBL	83	1.10	1.00	83	172	255	*
WBLT + EBL	296	1.10	0.60	195	34	229	
					Critical Volume	1229	OK
					V/C	0.68	

Movement	Volume	PCE	Lane Use Factor	Lane Volume	Opposing Lefts	Critical Lane Volume	*
					Critical Volume	0	OK
					V/C	0.00	

Maryland State Highway Administration
Turning Movement Summary and
Level of Service

Count Date:
Conditions: Existing
Design Year:

Location: MD 355 @ Tuckerman Ln
Computed By: JB
Date: 1/25/13

Montgomery County Method

Morning Peak Hour 7:00-8:00 am

Lane Configuration

Evening Peak Hour 5:00-6:00 pm

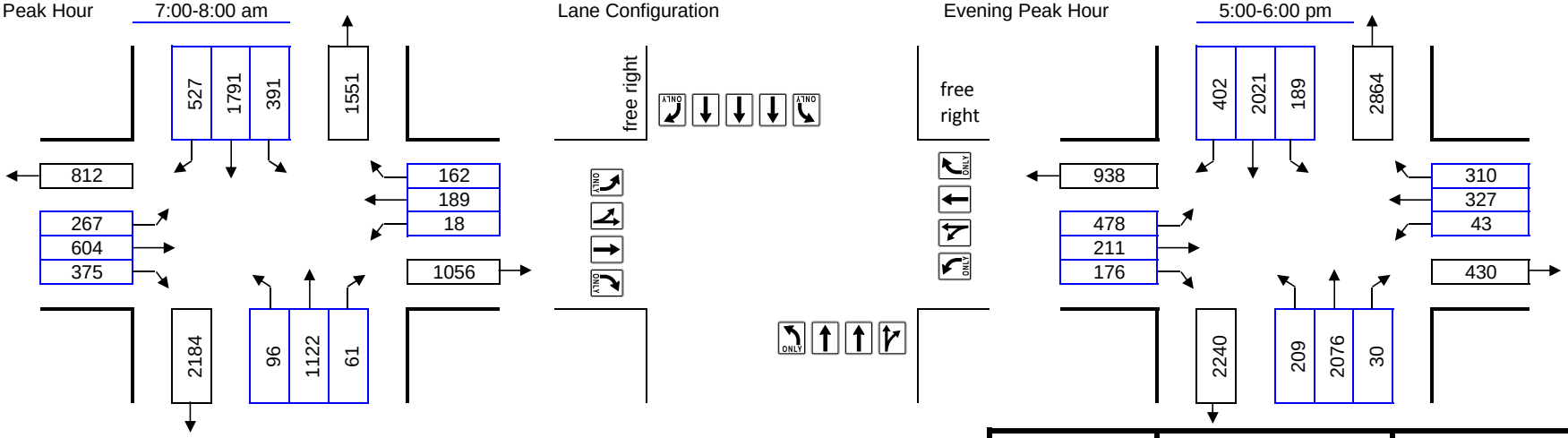

Right Turns Subtracted for Exclusive Right Turn Overlap Phasing or Right Turn on Red:

	AM	PM
NB Approach:	NB	NB
SB Approach:	SB	SB
EB Approach:	EB	EB
WB Approach:	WB	WB

Number of Lanes	Lane Use Factor
1 =	1.00
2 =	0.53
3 =	0.37
4 =	0.30
Dbl-left	0.60

Congestion Standard = 1800 for Grosvenor Policy Area

Opposing Volume (vph)		PCE
≤	199	1.1
≤	599	2.0
≤	799	3.0
≤	999	4.0
≥	1000	5.0

Movement	Volume	PCE	Lane Use Factor	Lane Volume	Opposing Lefts	Critical Lane Volume	*
NBTR + SBL	1183	1.00	0.37	438	391	829	*
SBT + NBL	1791	1.00	0.37	663	96	759	
EBLT + WBL	871	2.00	0.37	421	18	439	*
WBR + EBL	162	1.00	1.00	162	160	322	
					Critical Volume	1268	OK
					V/C	0.70	

De facto through lane(s) assumed for WB approach.

Movement	Volume	PCE	Lane Use Factor	Lane Volume	Opposing Lefts	Critical Lane Volume	*
NBTR + SBL	2106	1.00	0.37	779	189	968	*
SBT + NBL	2021	1.00	0.37	748	209	957	
EBT + WBL	689	1.00	1.00	689	43	732	*
WBR + EBL	310	1.00	1.00	310	287	597	
					Critical Volume	1700	OK
					V/C	0.94	

De facto LT lane(s) assumed for EB approach. De facto through lane(s) assumed for WB approach.

Maryland State Highway Administration
Turning Movement Summary and
Level of Service

Count Date:
Conditions: Existing Saturday
Design Year:

Location: MD 355 @ Tuckerman Ln
Computed By: JB
Date: 1/25/13

Montgomery County Method

Morning Peak Hour 7:00-8:00 am

Lane Configuration

Evening Peak Hour 5:00-6:00 pm

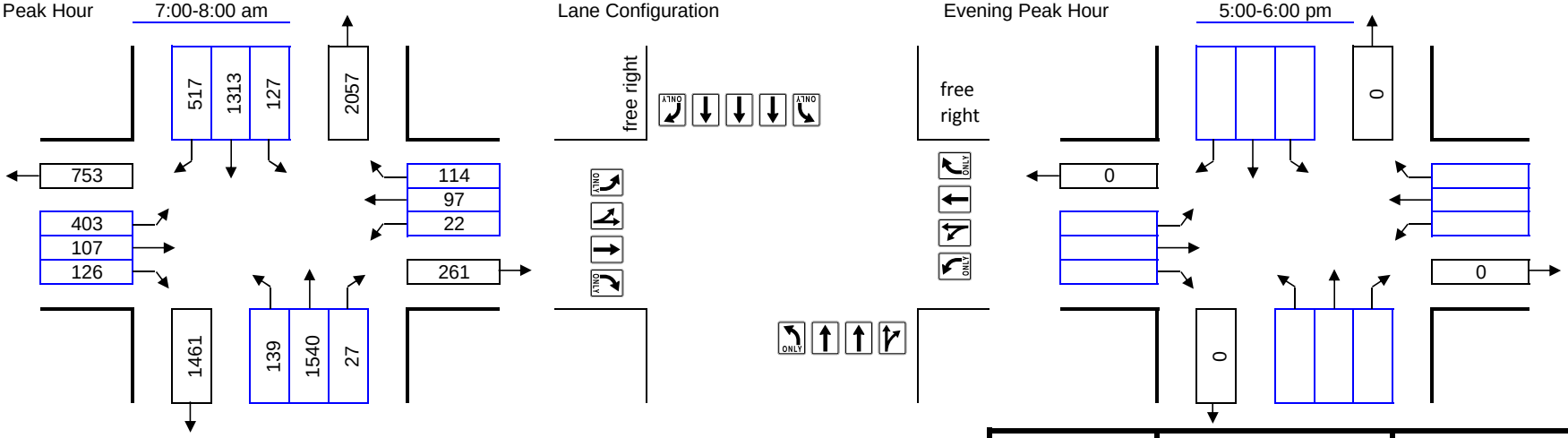

Right Turns Subtracted for Exclusive Right Turn Overlap Phasing or Right Turn on Red:

	AM	PM
NB Approach:	NB	NB
SB Approach:	SB	SB
EB Approach:	EB	EB
WB Approach:	WB	WB

Number of Lanes	Lane Use Factor
1 =	1.00
2 =	0.53
3 =	0.37
4 =	0.30
Dbl-left	0.60

Congestion Standard = 1800 for Grosvenor Policy Area

Opposing Volume (vph)		PCE
≤	199	1.1
≤	599	2.0
≤	799	3.0
≤	999	4.0
≥	1000	5.0

Movement	Volume	PCE	Lane Use Factor	Lane Volume	Opposing Lefts	Critical Lane Volume	*
NBTR + SBL	1567	1.00	0.37	580	127	707	*
SBR + NBL	517	1.00	1.00	517	139	656	
EBT + WBL	510	1.00	1.00	510	13	523	*
WBR + EBL	114	2.00	1.00	114	242	356	
					Critical Volume	1230	OK
					V/C	0.68	

De facto LT lane(s) assumed for EB approach.

Movement	Volume	PCE	Lane Use Factor	Lane Volume	Opposing Lefts	Critical Lane Volume	*
					Critical Volume	0	OK
					V/C	0.00	

Maryland State Highway Administration
Turning Movement Summary and
Level of Service

Count Date:
Conditions: Existing
Design Year:

Location: Montrose Rd. @ Montrose Pkwy

Computed By: JB Date: 4/3/14

Montgomery County Method

Morning Peak Hour 7:15-8:15 am

Lane Configuration

Evening Peak Hour 5:00-6:00 pm

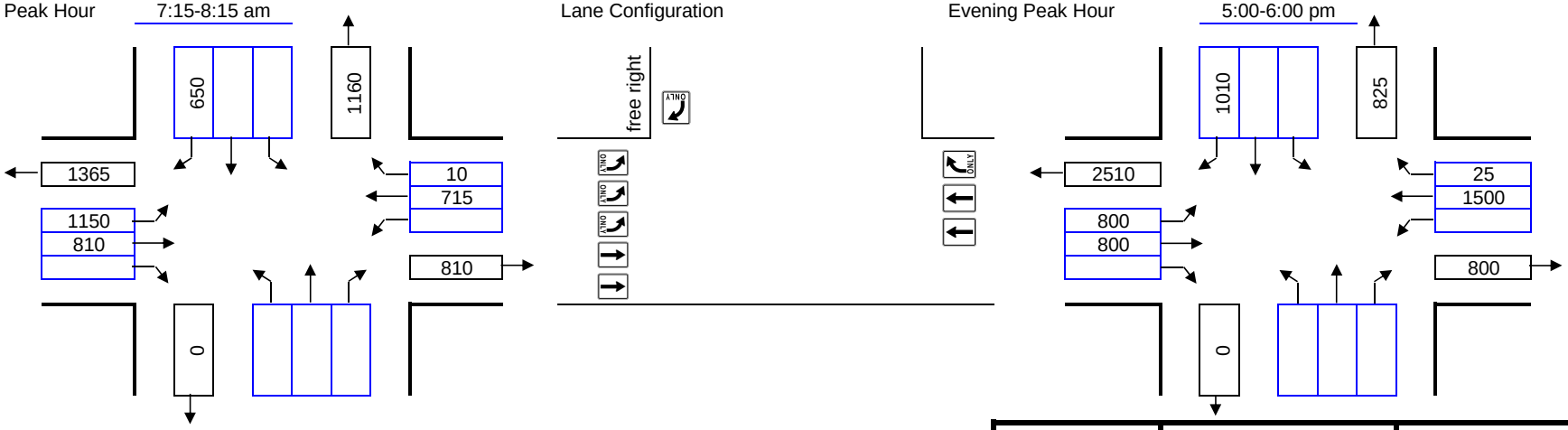

Right Turns Subtracted for Exclusive Right Turn Overlap Phasing or Right Turn on Red:

	AM		PM	
NB Approach:	NB		NB	
SB Approach:	SB	650	SB	1010
EB Approach:	EB		EB	
WB Approach:	WB		WB	

Number of Lanes	Lane Use Factor		Opposing Volume (vph)		PCE
1 =	1.00	Congestion Standard	≤	199	1.1
2 =	0.53	= 1550	≤	599	2.0
3 =	0.37	for	≤	799	3.0
4 =	0.30	North Bethesda	≤	999	4.0
Dbl-left	0.60	Policy	≥	1000	5.0
		Area			

Movement	Volume	PCE	Lane Use Factor	Lane Volume	Opposing Lefts	Critical Lane Volume	*
SBR	0	1.00	1.00	0	0	0	
EBT	810	1.00	0.53	429	0	429	
WBT + EBL	715	1.00	0.53	379	460	839	*
					Critical Volume	839	OK
					V/C	0.54	

Movement	Volume	PCE	Lane Use Factor	Lane Volume	Opposing Lefts	Critical Lane Volume	*
SBR	0	1.00	1.00	0	0	0	
EBT	800	1.00	0.53	424	0	424	
WBT + EBL	1500	1.00	0.53	795	320	1115	*
					Critical Volume	1115	OK
					V/C	0.72	

Maryland State Highway Administration
Turning Movement Summary and
Level of Service

Count Date:
Conditions: Existing Saturday
Design Year:

Location: Montrose Rd. @ Montrose Pkwy

Computed By: JB Date: 4/3/14

Montgomery County Method

Morning Peak Hour 7:15-8:15 am

Lane Configuration

Evening Peak Hour 5:00-6:00 pm

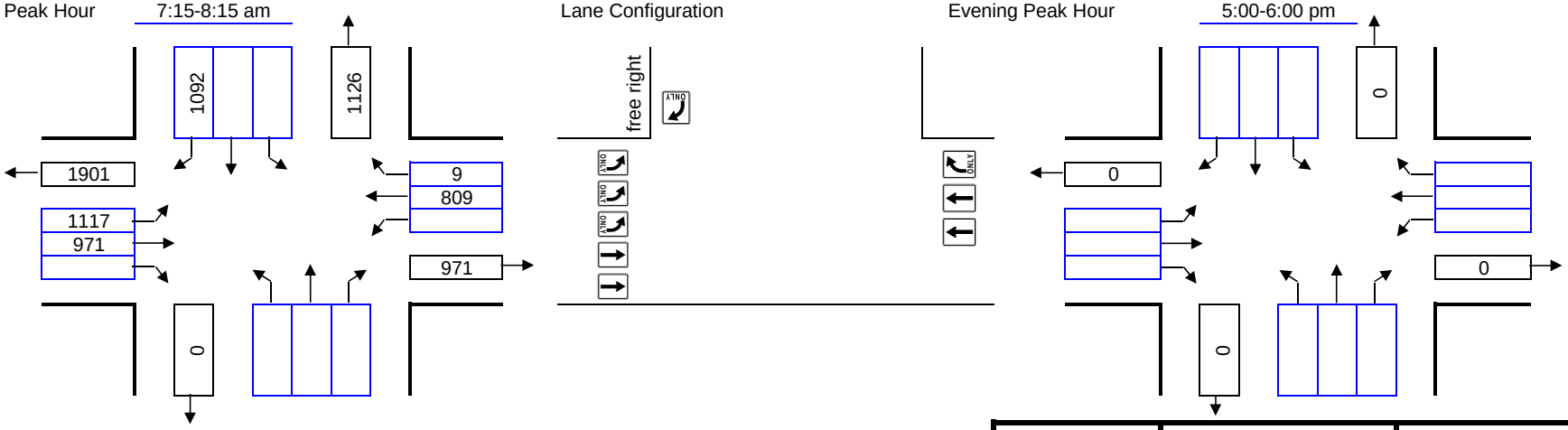

Right Turns Subtracted for Exclusive Right Turn Overlap Phasing or Right Turn on Red:

	AM		PM	
NB Approach:	NB		NB	
SB Approach:	SB	1092	SB	
EB Approach:	EB		EB	
WB Approach:	WB		WB	

Number of Lanes	Lane Use Factor		Opposing Volume (vph)		PCE
1 =	1.00	Congestion Standard	≤	199	1.1
2 =	0.53	= 1550	≤	599	2.0
3 =	0.37	for	≤	799	3.0
4 =	0.30	North Bethesda	≤	999	4.0
Dbl-left	0.60	Policy	≥	1000	5.0
		Area			

Movement	Volume	PCE	Lane Use Factor	Lane Volume	Opposing Lefts	Critical Lane Volume	*
SBR	0	1.00	1.00	0	0	0	
EBT	971	1.00	0.53	515	0	515	
WBT + EBL	809	1.00	0.53	429	447	876	*
					Critical Volume	876	OK
						V/C	0.57

Movement	Volume	PCE	Lane Use Factor	Lane Volume	Opposing Lefts	Critical Lane Volume	*
					Critical Volume	0	OK
						V/C	0.00

Maryland State Highway Administration
Turning Movement Summary and
Level of Service

Count Date:
Conditions: Existing
Design Year:

Location: East Jefferson @ Montrose Road

Computed By: BJM Date: 4/11/14

Montgomery County Method

Morning Peak Hour 7:15-8:15 am

Lane Configuration

Evening Peak Hour 5:00-6:00 pm

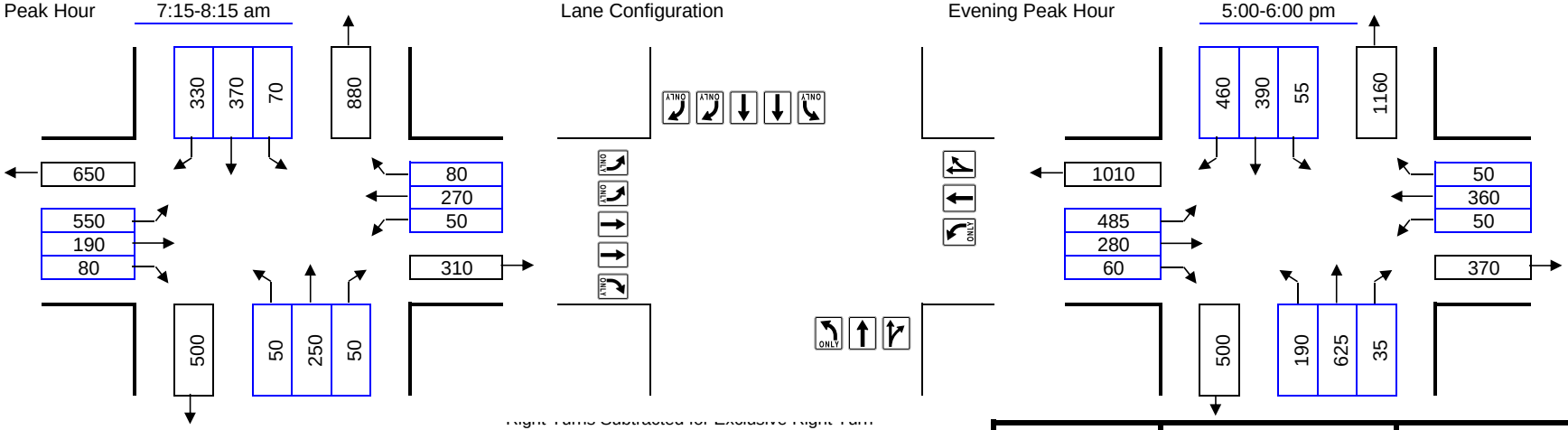

Right Turns Subtracted for Exclusive Right Turn Overlap Phasing or Right Turn on Red and Free Rights:

	AM	PM
NB Approach:	NB	NB
SB Approach:	SB	SB 291
EB Approach:	EB	EB
WB Approach:	WB	WB

Number of Lanes	Lane Use Factor		Opposing Volume (vph)		PCE
1 =	1.00	Congestion Standard	≤	199	1.1
2 =	0.53	= 1550	≤	599	2.0
3 =	0.37	for	≤	799	3.0
4 =	0.30	North Bethesda	≤	999	4.0
Dbl-left	0.60	Policy Area	≥	1000	5.0

Movement	Volume	PCE	Lane Use Factor	Lane Volume	Opposing Lefts	Critical Lane Volume	*
NBTR + SBL	300	1.00	0.53	159	70	229	
SBT + NBL	370	1.00	0.53	196	50	246	*
EBT + WBL	190	1.00	0.53	101	50	151	
WBTR + EBL	350	1.00	0.53	186	330	516	*
					Critical Volume	762	OK
					V/C	0.49	

Movement	Volume	PCE	Lane Use Factor	Lane Volume	Opposing Lefts	Critical Lane Volume	*
NBTR + SBL	660	1.00	0.53	350	55	405	*
SBT + NBL	390	1.00	0.53	207	190	397	
EBT + WBL	280	1.00	0.53	148	50	198	
WBTR + EBL	410	1.00	0.53	217	291	508	*
					Critical Volume	913	OK
					V/C	0.59	

Maryland State Highway Administration
Turning Movement Summary and
Level of Service

Count Date:
Conditions: SATURDAY
Design Year: Existing

Location: East Jefferson @ Montrose Road
Computed By: BJM
Date: 4/11/14

Montgomery County Method

Morning Peak Hour 7:15-8:15 am

Lane Configuration

Evening Peak Hour 5:00-6:00 pm

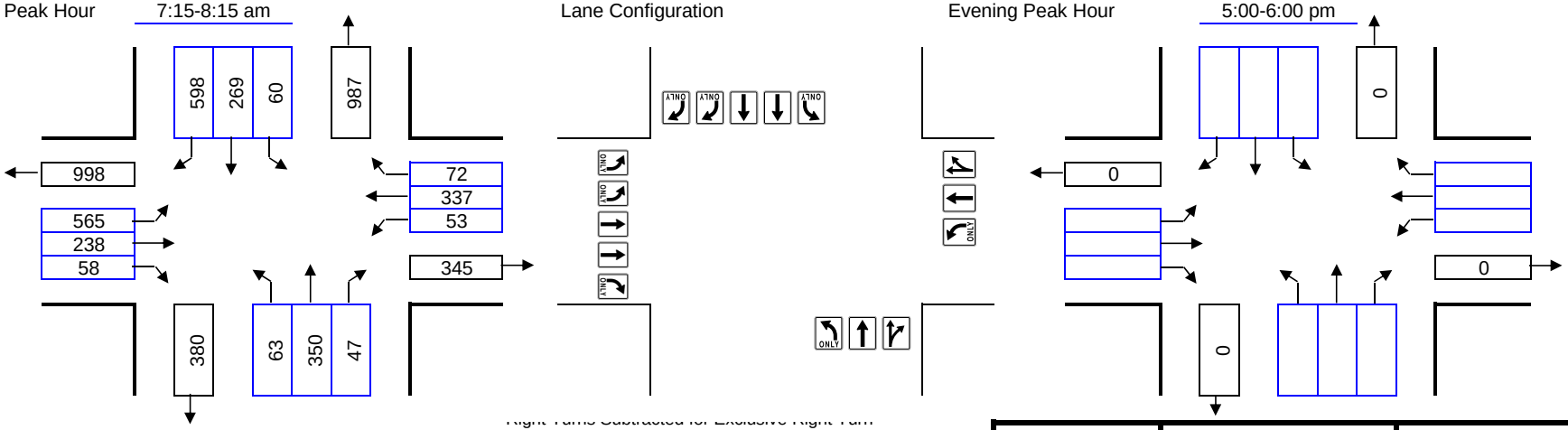

Right Turns Subtracted for Exclusive Right Turn Overlap Phasing or Right Turn on Red and Free Rights:

	AM		PM	
NB Approach:	NB		NB	
SB Approach:	SB	339	SB	
EB Approach:	EB		EB	
WB Approach:	WB		WB	

Number of Lanes	Lane Use Factor		Opposing Volume (vph)		PCE
1 =	1.00	Congestion Standard	≤	199	1.1
2 =	0.53	= 1550	≤	599	2.0
3 =	0.37	for	≤	799	3.0
4 =	0.30	North Bethesda	≤	999	4.0
Dbl-left	0.60	Policy	≥	1000	5.0
		Area			

Movement	Volume	PCE	Lane Use Factor	Lane Volume	Opposing Lefts	Critical Lane Volume	*
NBTR + SBL	397	1.00	0.53	210	60	270	*
SBT + NBL	269	1.00	0.53	143	63	206	
EBT + WBL	238	1.00	0.53	126	53	179	
WBTR + EBL	409	1.00	0.53	217	339	556	*
					Critical Volume	826	OK
					V/C	0.53	

Movement	Volume	PCE	Lane Use Factor	Lane Volume	Opposing Lefts	Critical Lane Volume	*
					Critical Volume	0	OK
					V/C	0.00	

Maryland State Highway Administration
Turning Movement Summary and
Level of Service

Count Date:
Conditions:
Design Year: Existing

Location: Hoya Street @ Montrose Road

Computed By: BJM

Date: 4/4/14

Montgomery County Method

Morning Peak Hour 7:15-8:15 am

Lane Configuration

Evening Peak Hour 5:00-6:00 pm

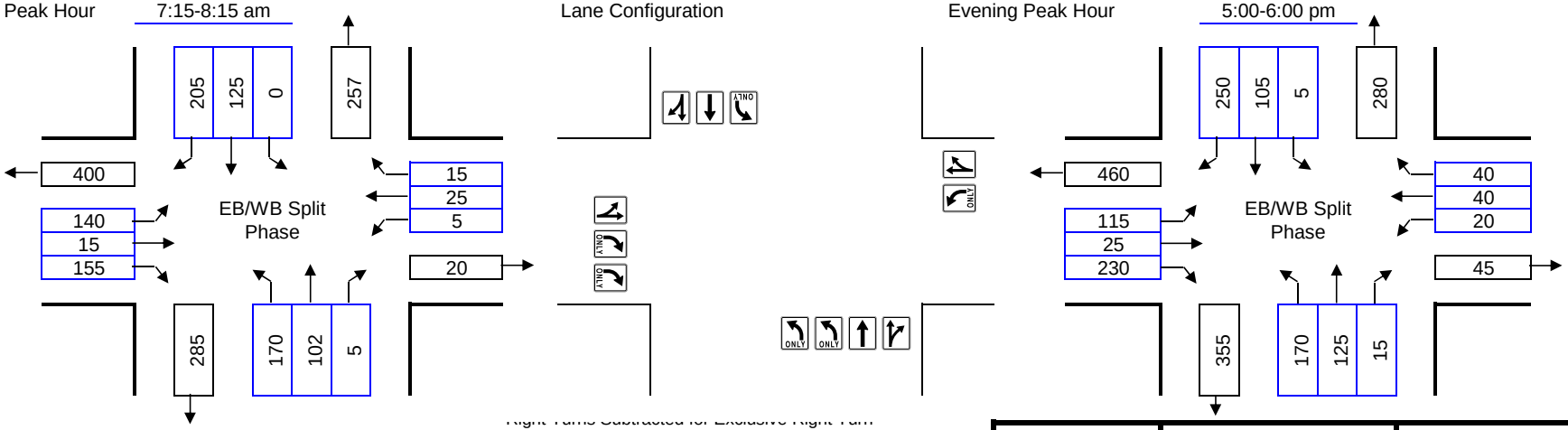

Right Turns Subtracted for Exclusive Right Turn Overlap Phasing or Right Turn on Red and Free Rights:

	AM		PM	
NB Approach:	NB		NB	
SB Approach:	SB	62	SB	130
EB Approach:	EB		EB	
WB Approach:	WB		WB	

Number of Lanes	Lane Use Factor		Opposing Volume (vph)		PCE
1 =	1.00	Congestion Standard	≤	199	1.1
2 =	0.53	= 1800	≤	599	2.0
3 =	0.37	for	≤	799	3.0
4 =	0.30	White Flint	≤	999	4.0
Dbl-left	0.60	Policy Area	≥	1000	5.0

Movement	Volume	PCE	Lane Use Factor	Lane Volume	Opposing Lefts	Critical Lane Volume	*
NBTR	107	1.00	0.53	57	0	57	
SBR + NBL	143	1.00	1.00	143	102	245	*
EBLT	155	1.00	1.00	155	0	155	*
WBTR	40	1.00	1.00	40	0	40	*
					Critical Volume	440	OK
					V/C	0.24	

De facto RT lane(s) assumed for SB approach.

Movement	Volume	PCE	Lane Use Factor	Lane Volume	Opposing Lefts	Critical Lane Volume	*
NBTR + SBL	140	1.00	0.53	74	5	79	
SBR + NBL	120	1.00	1.00	120	102	222	*
EBLT	140	1.00	1.00	140	0	140	*
WBTR	80	1.00	1.00	80	0	80	*
					Critical Volume	442	OK
					V/C	0.25	

De facto RT lane(s) assumed for SB approach.

Maryland State Highway Administration
Turning Movement Summary and
Level of Service

Count Date:
Conditions: Saturday
Design Year: Existing

Location: Hoya Street @ Montrose Road
Computed By: BJM
Date: 4/4/14

Montgomery County Method

Morning Peak Hour 7:15-8:15 am

Lane Configuration

Evening Peak Hour 5:00-6:00 pm

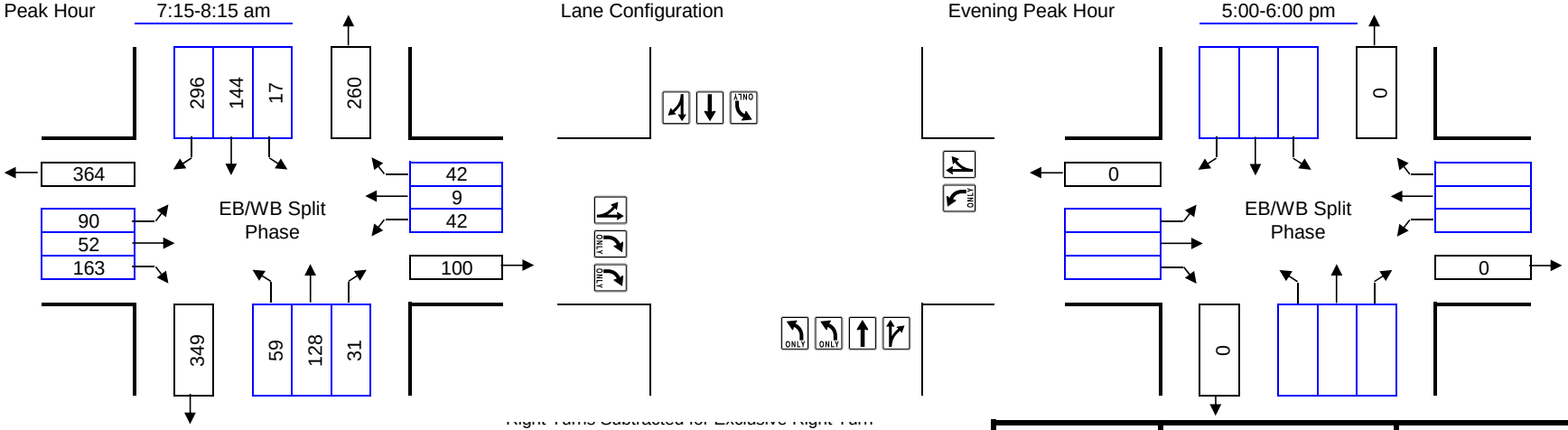

Right Turns Subtracted for Exclusive Right Turn Overlap Phasing or Right Turn on Red and Free Rights:

	AM		PM	
NB Approach:	NB		NB	
SB Approach:	SB	132	SB	
EB Approach:	EB		EB	
WB Approach:	WB		WB	

Number of Lanes	Lane Use Factor		Opposing Volume (vph)		PCE
1 =	1.00	Congestion Standard	≤	199	1.1
2 =	0.53	= 1800	≤	599	2.0
3 =	0.37	for	≤	799	3.0
4 =	0.30	White Flint	≤	999	4.0
Dbl-left	0.60	Policy	≥	1000	5.0
		Area			

Movement	Volume	PCE	Lane Use Factor	Lane Volume	Opposing Lefts	Critical Lane Volume	*
NBTR + SBL	159	1.00	0.53	84	17	101	
SBR + NBL	164	1.00	1.00	164	35	199	*
EBLT	142	1.00	1.00	142	0	142	*
WBTR	51	1.00	1.00	51	0	51	*
					Critical Volume	392	OK
					V/C	0.22	

De facto RT lane(s) assumed for SB approach.

Movement	Volume	PCE	Lane Use Factor	Lane Volume	Opposing Lefts	Critical Lane Volume	*
					Critical Volume	0	OK
					V/C	0.00	

Maryland State Highway Administration
Turning Movement Summary and
Level of Service

Count Date:
Conditions: Existing
Design Year:

Location: Montrose Pkwy. @ E. Jefferson St.

Computed By: JB Date: 1/25/13

Montgomery County Method

Morning Peak Hour 7:15-8:15 am

Lane Configuration

Evening Peak Hour 5:00-6:00 pm

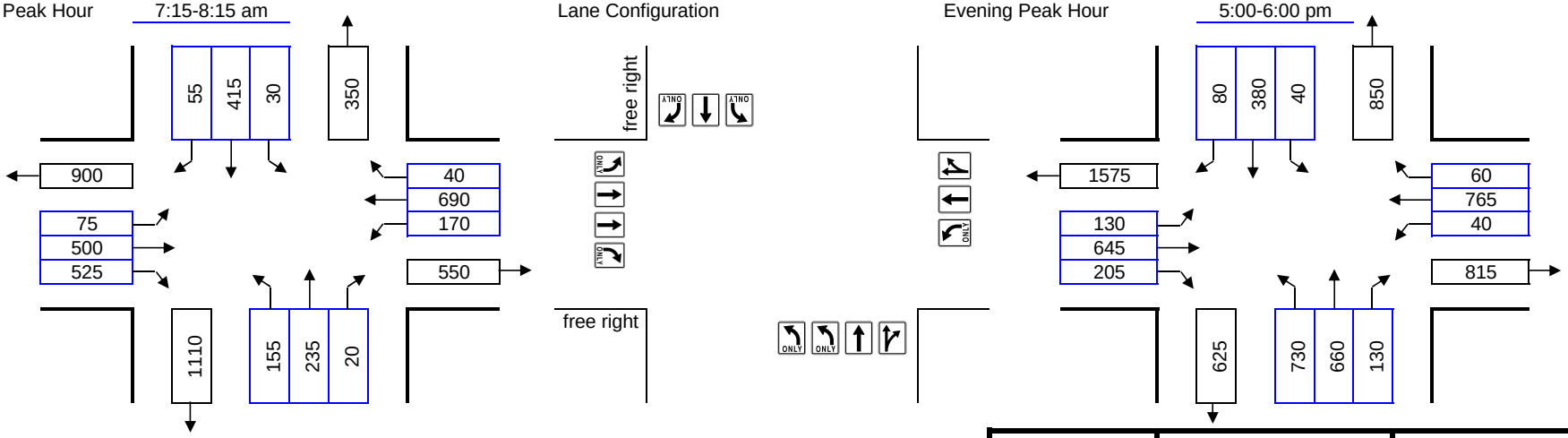

Right Turns Subtracted for Exclusive Right Turn
Overlap Phasing or Right Turn on Red:

	AM	PM
NB Approach:	NB	NB
SB Approach:	SB	SB
EB Approach:	EB 525	EB
WB Approach:	WB	WB

Number of Lanes	Lane Use Factor
1 =	1.00
2 =	0.53
3 =	0.37
4 =	0.30
Dbl-left	0.60

Congestion Standard = 1550 for North Bethesda Policy Area

Opposing Volume (vph)		PCE
≤	199	1.1
≤	599	2.0
≤	799	3.0
≤	999	4.0
≥	1000	5.0

Movement	Volume	PCE	Lane Use Factor	Lane Volume	Opposing Lefts	Critical Lane Volume	*
NBTR + SBL	255	1.00	0.53	135	30	165	
SBT + NBL	415	1.00	1.00	415	93	508	*
EBT + WBL	500	1.00	0.53	265	170	435	
WBTR + EBL	730	1.00	0.53	387	75	462	*
					Critical Volume	970	OK
					V/C	0.63	

Movement	Volume	PCE	Lane Use Factor	Lane Volume	Opposing Lefts	Critical Lane Volume	*
NBTR + SBL	790	1.00	0.53	419	40	459	
SBT + NBL	380	1.00	1.00	380	438	818	*
EBT + WBL	645	1.00	0.53	342	40	382	
WBTR + EBL	825	1.00	0.53	437	130	567	*
					Critical Volume	1385	OK
					V/C	0.89	

Maryland State Highway Administration
Turning Movement Summary and
Level of Service

Count Date:
Conditions: Existing Saturday
Design Year:

Location: Montrose Pkwy. @ E. Jefferson St.
Computed By: JB
Date: 1/25/13

Montgomery County Method

Morning Peak Hour 7:15-8:15 am

Lane Configuration

Evening Peak Hour 5:00-6:00 pm

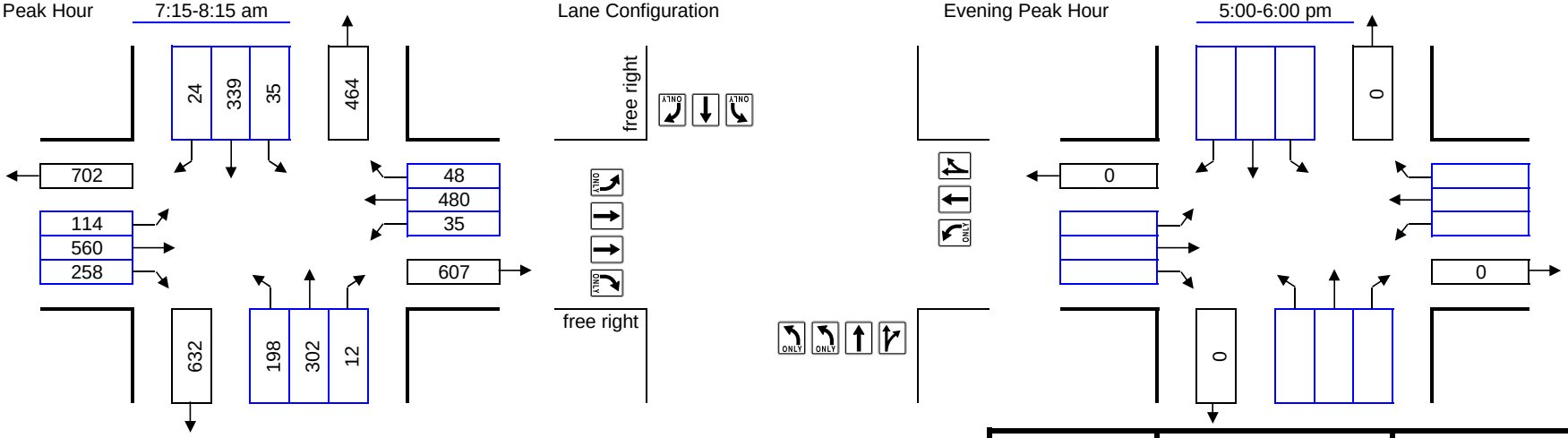

Right Turns Subtracted for Exclusive Right Turn Overlap Phasing or Right Turn on Red:

	AM	PM
NB Approach:	NB	NB
SB Approach:	SB	SB
EB Approach:	EB	EB
WB Approach:	WB	WB

Number of Lanes	Lane Use Factor		Opposing Volume (vph)		PCE
1 =	1.00	Congestion Standard	≤	199	1.1
2 =	0.53	= 1550	≤	599	2.0
3 =	0.37	for	≤	799	3.0
4 =	0.30	North Bethesda	≤	999	4.0
Dbl-left	0.60	Policy	≥	1000	5.0
		Area			

Movement	Volume	PCE	Lane Use Factor	Lane Volume	Opposing Lefts	Critical Lane Volume	*
NBTR + SBL	314	1.00	0.53	166	35	201	
SBT + NBL	339	1.00	1.00	339	119	458	*
EBT + WBL	560	1.00	0.53	297	35	332	
WBTR + EBL	528	1.00	0.53	280	114	394	*
					Critical Volume	852	OK
					V/C	0.55	

Movement	Volume	PCE	Lane Use Factor	Lane Volume	Opposing Lefts	Critical Lane Volume	*
					Critical Volume	0	OK
					V/C	0.00	

Maryland State Highway Administration
Turning Movement Summary and
Level of Service

Count Date:
Conditions: Existing
Design Year:

Location: Hoya St.@ Montrose Pkwy

Computed By: JB Date: 1/25/13

Montgomery County Method

Morning Peak Hour 7:00-8:00 am

Lane Configuration

Evening Peak Hour 5:00-6:00 pm

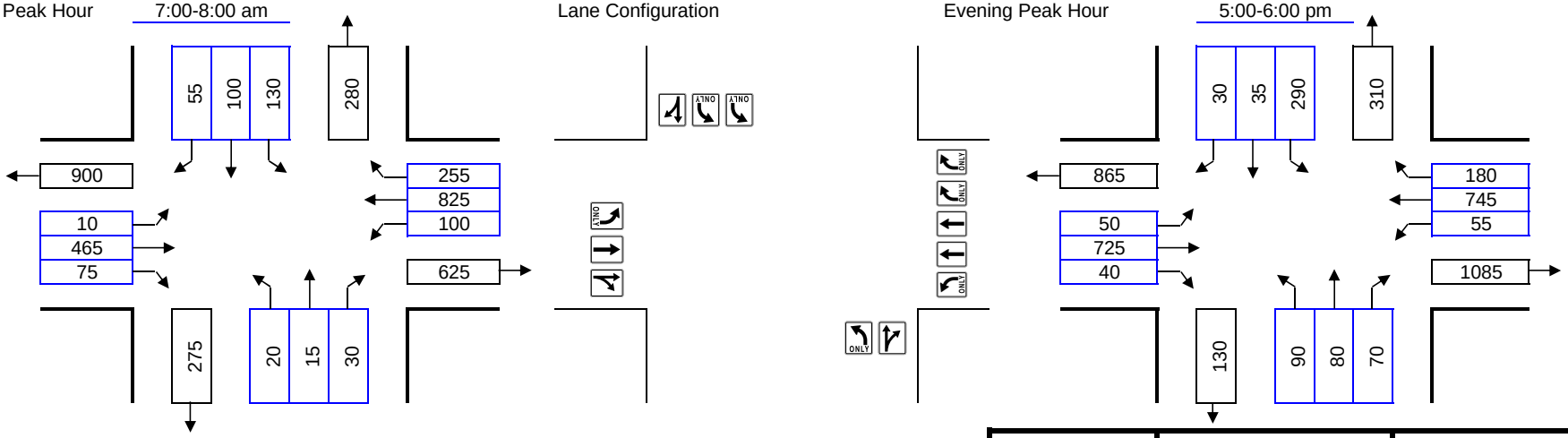

Right Turns Subtracted for Exclusive Right Turn Overlap Phasing or Right Turn on Red:

	AM	PM
NB Approach:	NB	NB
SB Approach:	SB	SB
EB Approach:	EB	EB
WB Approach:	WB	WB

Number of Lanes	Lane Use Factor
1 =	1.00
2 =	0.53
3 =	0.37
4 =	0.30
Dbl-left	0.60

Congestion Standard = 1800 for White Flint Policy Area

Opposing Volume (vph)		PCE
≤	199	1.1
≤	599	2.0
≤	799	3.0
≤	999	4.0
≥	1000	5.0

Movement	Volume	PCE	Lane Use Factor	Lane Volume	Opposing Lefts	Critical Lane Volume	*
NBTR + SBL	45	1.00	1.00	45	78	123	
SBTR + NBL	155	1.00	1.00	155	20	175	*
EBTR + WBL	540	1.00	0.53	286	100	386	
WBT + EBL	825	1.00	0.53	437	10	447	*
					Critical Volume	622	OK
					V/C	0.35	

Movement	Volume	PCE	Lane Use Factor	Lane Volume	Opposing Lefts	Critical Lane Volume	*
NBTR + SBL	150	1.00	1.00	150	174	324	*
SBTR + NBL	65	1.00	1.00	65	90	155	
EBTR + WBL	765	1.00	0.53	405	55	460	*
WBT + EBL	745	1.00	0.53	395	50	445	
					Critical Volume	784	OK
					V/C	0.44	

Maryland State Highway Administration
Turning Movement Summary and
Level of Service

Count Date:
Conditions: Existing Saturday
Design Year:

Location: Hoya St. @ Montrose Pkwy
Computed By: JB
Date: 1/25/13

Montgomery County Method

Morning Peak Hour 7:00-8:00 am

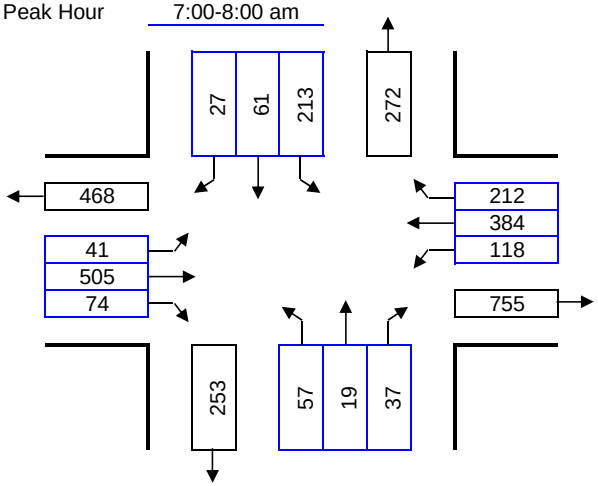

Lane Configuration

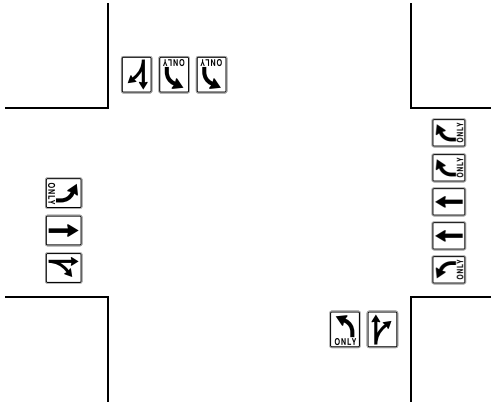

Evening Peak Hour 5:00-6:00 pm

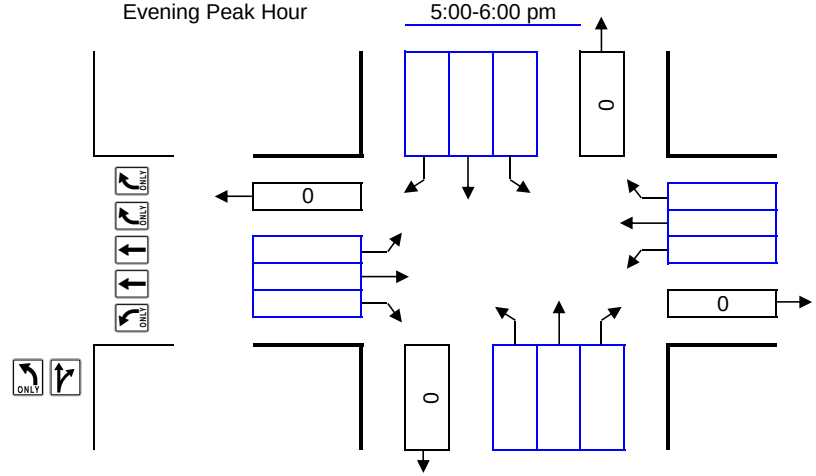

Right Turns Subtracted for Exclusive Right Turn Overlap Phasing or Right Turn on Red:

	AM	PM
NB Approach:	NB	NB
SB Approach:	SB	SB
EB Approach:	EB	EB
WB Approach:	WB	WB

Number of Lanes	Lane Use Factor
1 =	1.00
2 =	0.53
3 =	0.37
4 =	0.30
Dbl-left	0.60

Congestion Standard = 1800 for White Flint Policy Area

Opposing Volume (vph)		PCE
≤	199	1.1
≤	599	2.0
≤	799	3.0
≤	999	4.0
≥	1000	5.0

Movement	Volume	PCE	Lane Use Factor	Lane Volume	Opposing Lefts	Critical Lane Volume	*
NBTR + SBL	56	1.00	1.00	56	128	184	*
SBTR + NBL	88	1.00	1.00	88	57	145	
EBTR + WBL	579	1.00	0.53	307	118	425	*
WBT + EBL	384	1.00	0.53	204	41	245	
					Critical Volume	609	OK
					V/C	0.34	

Movement	Volume	PCE	Lane Use Factor	Lane Volume	Opposing Lefts	Critical Lane Volume	*
					Critical Volume	0	OK
					V/C	0.00	

Maryland State Highway Administration
Turning Movement Summary and
Level of Service

Count Date:
Conditions: Existing
Design Year:

Location: Randolph Road @ Chapman Avenue/Maple Ave

Computed By: BJM Date: 4/4/14

Montgomery County Method

Morning Peak Hour 7:15-8:15 am

Lane Configuration

Evening Peak Hour 5:00-6:00 pm

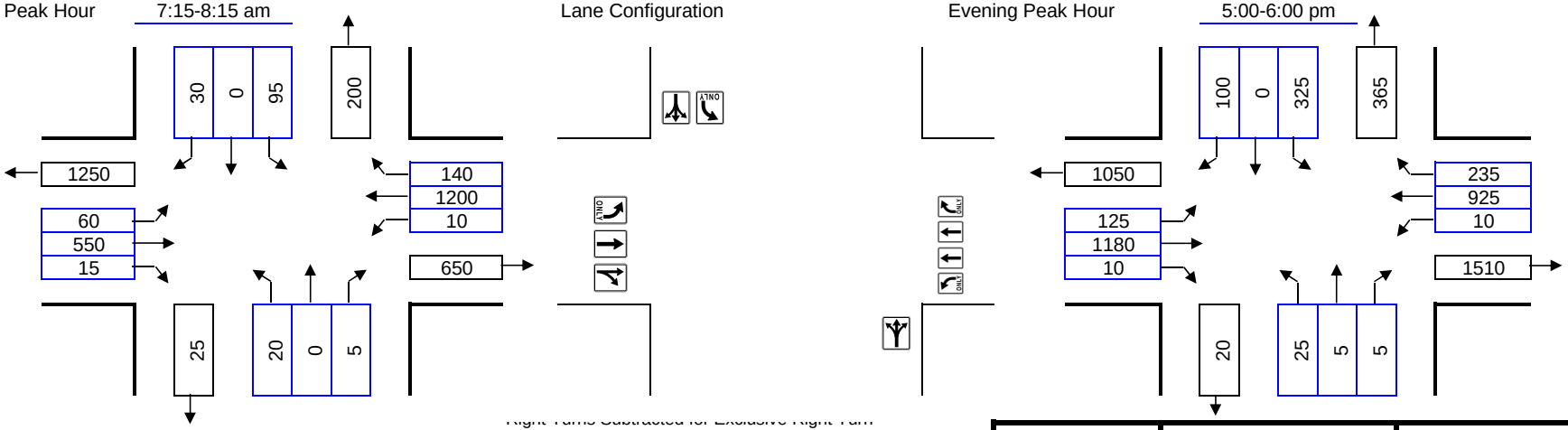

Overlap Phasing or Right Turn on Red and Free Rights:

	AM	PM
NB Approach:	NB	NB
SB Approach:	SB	SB
EB Approach:	EB	EB
WB Approach:	WB	WB

Number of Lanes	Lane Use Factor		Opposing Volume (vph)		PCE
1 =	1.00	Congestion Standard	≤	199	1.1
2 =	0.53	= 1800	≤	599	2.0
3 =	0.37	for	≤	799	3.0
4 =	0.30	White Flint	≤	999	4.0
Dbl-left	0.60	Policy Area	≥	1000	5.0

Movement	Volume	PCE	Lane Use Factor	Lane Volume	Opposing Lefts	Critical Lane Volume	*
NBLTR + SBL	25	1.00	1.00	25	57	82	
SBLTR + NBL	125	1.00	0.60	75	20	95	*
EBTR + WBL	565	1.00	0.53	299	10	309	
WBT + EBL	1200	1.00	0.53	636	60	696	*
					Critical Volume	791	OK
					V/C	0.44	

Movement	Volume	PCE	Lane Use Factor	Lane Volume	Opposing Lefts	Critical Lane Volume	*
NBLTR + SBL	35	1.00	1.00	35	195	230	
SBLTR + NBL	425	1.00	0.60	255	25	280	*
EBTR + WBL	1190	1.00	0.53	631	10	641	*
WBT + EBL	925	1.00	0.53	490	125	615	
					Critical Volume	921	OK
					V/C	0.51	

Maryland State Highway Administration
Turning Movement Summary and
Level of Service

Count Date:
Conditions: Existing Saturday
Design Year:

Location: Randolph Road @ Chapman Avenue/Maple Ave

Computed By: BJM Date: 4/4/14

Montgomery County Method

Morning Peak Hour 7:15-8:15 am

Lane Configuration

Evening Peak Hour 5:00-6:00 pm

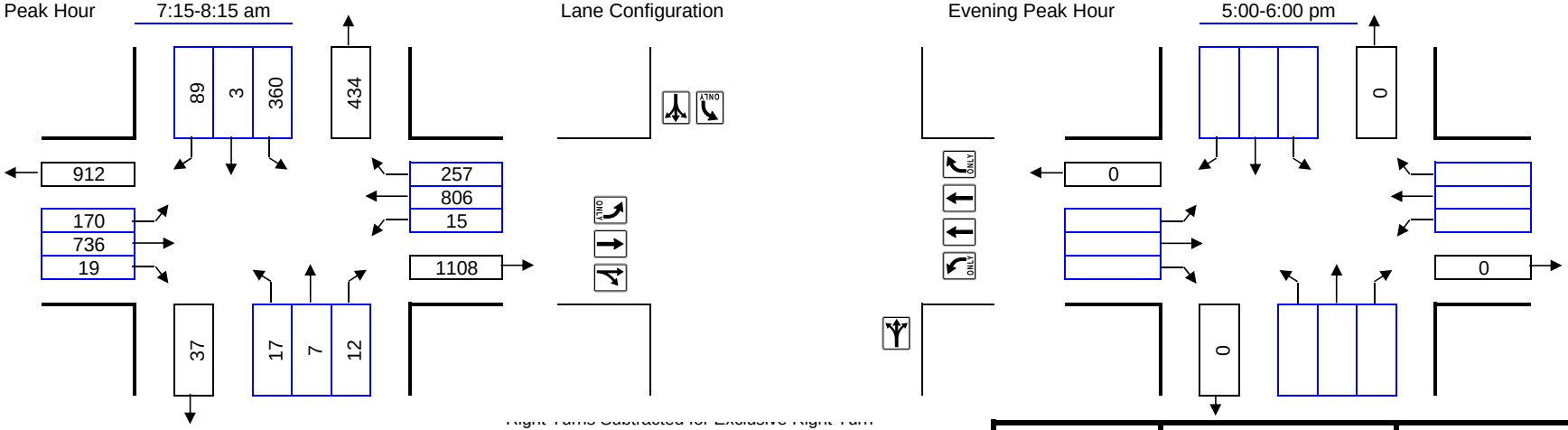

Right Turns Subtracted for Exclusive Right Turn Overlap Phasing or Right Turn on Red and Free Rights:

	AM	PM
NB Approach:	NB	NB
SB Approach:	SB	SB
EB Approach:	EB	EB
WB Approach:	WB	WB

Number of Lanes	Lane Use Factor		Opposing Volume (vph)		PCE
1 =	1.00	Congestion Standard	≤	199	1.1
2 =	0.53	= 1800	≤	599	2.0
3 =	0.37	for	≤	799	3.0
4 =	0.30	White Flint	≤	999	4.0
Dbl-left	0.60	Policy Area	≥	1000	5.0

Movement	Volume	PCE	Lane Use Factor	Lane Volume	Opposing Lefts	Critical Lane Volume	*
NBLTR + SBL	36	1.00	1.00	36	216	252	
SBLTR + NBL	452	1.00	0.60	271	17	288	*
EBTR + WBL	755	1.00	0.53	400	15	415	
WBT + EBL	806	1.00	0.53	427	170	597	*
					Critical Volume	885	OK
					V/C	0.49	

Movement	Volume	PCE	Lane Use Factor	Lane Volume	Opposing Lefts	Critical Lane Volume	*
					Critical Volume	0	OK
					V/C	0.00	

Maryland State Highway Administration
Turning Movement Summary and
Level of Service

Count Date:
Conditions:
Design Year: Existing

Location: Randolph Road @ Nebel

Computed By: BJM

Date: 4/3/14

Montgomery County Method

Morning Peak Hour 7:15-8:15 am

Lane Configuration

Evening Peak Hour 5:00-6:00 pm

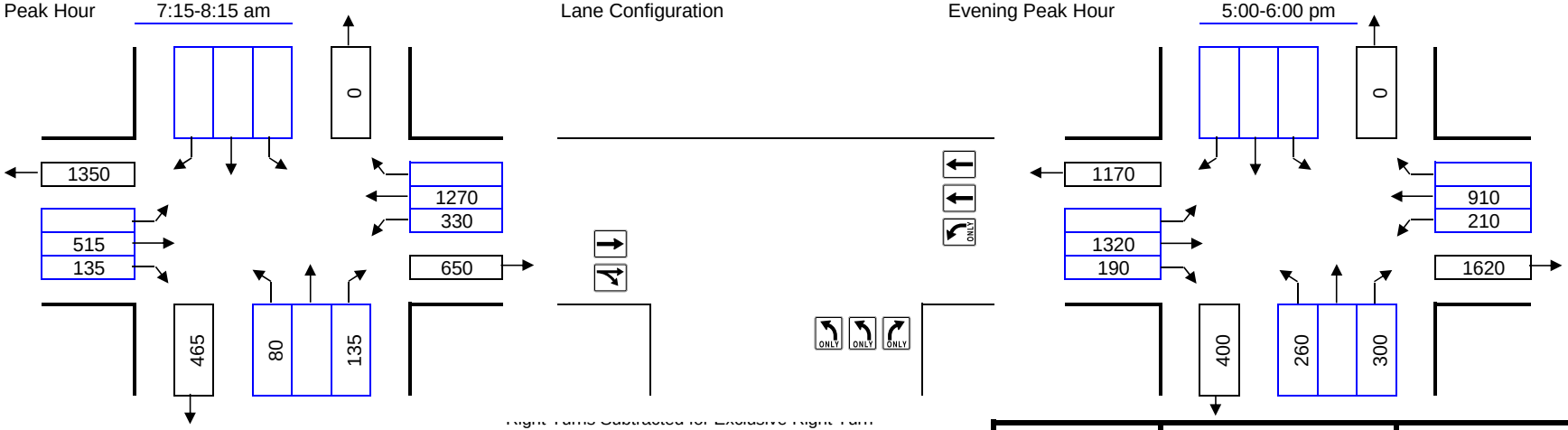

Right Turns Subtracted for Exclusive Right Turn Overlap Phasing or Right Turn on Red and Free Rights:

	AM		PM	
NB Approach:	NB	135	NB	210
SB Approach:	SB		SB	
EB Approach:	EB		EB	
WB Approach:	WB		WB	

Number of Lanes	Lane Use Factor		Opposing Volume (vph)		PCE
1 =	1.00	Congestion Standard	≤	199	1.1
2 =	0.53	= 1800	≤	599	2.0
3 =	0.37	for	≤	799	3.0
4 =	0.30	White Flint	≤	999	4.0
Dbl-left	0.60	Policy	≥	1000	5.0
		Area			

Movement	Volume	PCE	Lane Use Factor	Lane Volume	Opposing Lefts	Critical Lane Volume	*
NBL	80	1.00	0.60	48	0	48	*
EBTR + WBL	650	1.00	0.53	345	330	675	*
WBT	1270	1.00	0.53	673	0	673	
					Critical Volume	723	OK
						V/C	0.40

Movement	Volume	PCE	Lane Use Factor	Lane Volume	Opposing Lefts	Critical Lane Volume	*
NBL	260	1.00	0.60	156	0	156	*
EBTR + WBL	1510	1.00	0.53	800	210	1010	*
WBT	910	1.00	0.53	482	0	482	
					Critical Volume	1166	OK
						V/C	0.65

Maryland State Highway Administration
Turning Movement Summary and
Level of Service

Count Date:
Conditions: SATURDAY
Design Year: Existing

Location: Randolph Road @ Nebel
Computed By: BJM
Date: 4/3/14

Montgomery County Method

Morning Peak Hour 7:15-8:15 am

Lane Configuration

Evening Peak Hour 5:00-6:00 pm

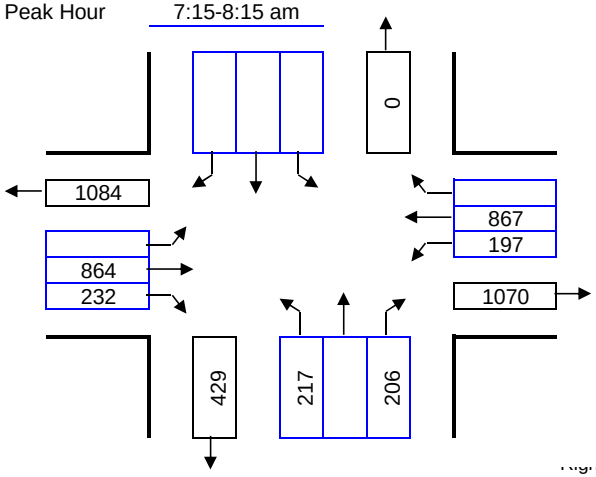

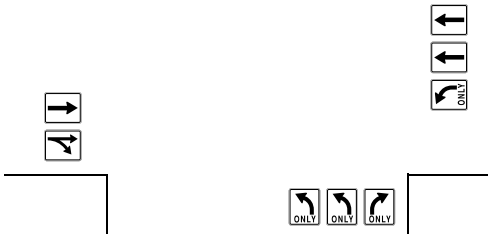

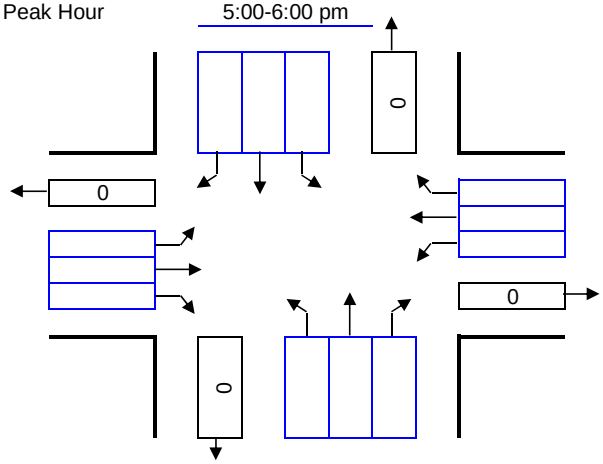

Right Turns Subtracted for Exclusive Right Turn Overlap Phasing or Right Turn on Red and Free Rights:

	AM		PM	
NB Approach:	NB	197	NB	
SB Approach:	SB		SB	
EB Approach:	EB		EB	
WB Approach:	WB		WB	

Number of Lanes	Lane Use Factor		Opposing Volume (vph)		PCE
1 =	1.00	Congestion Standard	≤	199	1.1
2 =	0.53	= 1800	≤	599	2.0
3 =	0.37	for	≤	799	3.0
4 =	0.30	White Flint	≤	999	4.0
Dbl-left	0.60	Policy	≥	1000	5.0
		Area			

Movement	Volume	PCE	Lane Use Factor	Lane Volume	Opposing Lefts	Critical Lane Volume	*
NBL	217	1.00	0.60	130	0	130	*
EBTR + WBL	1096	1.00	0.53	581	197	778	*
WBT	867	1.00	0.53	460	0	460	
					Critical Volume	908	OK
					V/C	0.50	

Movement	Volume	PCE	Lane Use Factor	Lane Volume	Opposing Lefts	Critical Lane Volume	*
					Critical Volume	0	OK
					V/C	0.00	

Maryland State Highway Administration
Turning Movement Summary and
Level of Service

Count Date:
Conditions: Existing
Design Year:

Location: Randolph Rd. @ Parklawn Dr.

Computed By: JB Date: 1/25/13

Montgomery County Method

Morning Peak Hour 7:15-8:15 am

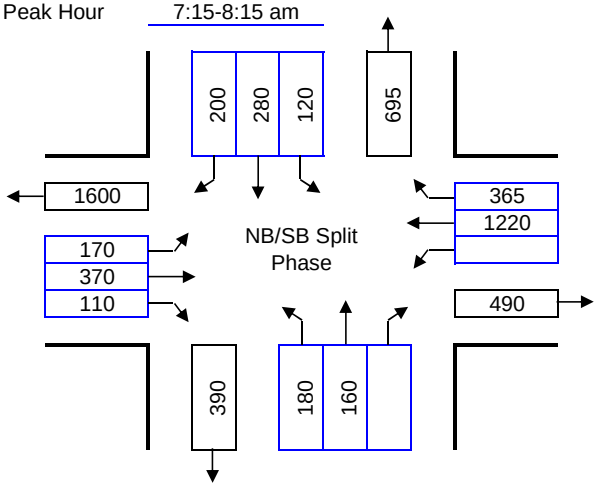

Lane Configuration

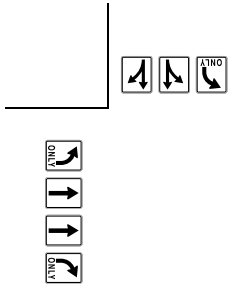

Evening Peak Hour 5:00-6:00 pm

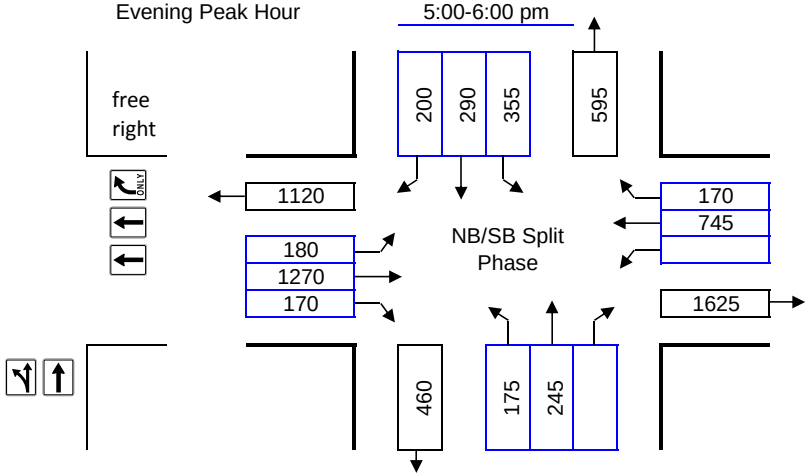

Right Turns Subtracted for Exclusive Right Turn Overlap Phasing or Right Turn on Red:

	AM	PM
NB Approach:	NB	NB
SB Approach:	SB	SB
EB Approach:	EB	EB
WB Approach:	WB	WB

Number of Lanes	Lane Use Factor
1 =	1.00
2 =	0.53
3 =	0.37
4 =	0.30
Dbl-left	0.60

Congestion Standard = 1550 for North Bethesda Policy Area

Opposing Volume (vph)		PCE
≤	199	1.1
≤	599	2.0
≤	799	3.0
≤	999	4.0
≥	1000	5.0

Movement	Volume	PCE	Lane Use Factor	Lane Volume	Opposing Lefts	Critical Lane Volume	*
NBLT	340	1.00	0.53	180	0	180	*
SBLTR	480	1.00	0.53	254	0	254	*
EBT	370	1.00	0.53	196	0	196	
WBT + EBL	1220	1.00	0.53	647	170	817	*
					Critical Volume	1251	OK
					V/C	0.81	

De facto through lane(s) assumed for SB approach.

Movement	Volume	PCE	Lane Use Factor	Lane Volume	Opposing Lefts	Critical Lane Volume	*
NBLT	420	1.00	0.53	223	0	223	*
SBLTR	845	1.00	0.37	313	0	313	*
EBT	1270	1.00	0.53	673	0	673	*
WBT + EBL	745	1.00	0.53	395	180	575	
					Critical Volume	1209	OK
					V/C	0.78	

Maryland State Highway Administration
Turning Movement Summary and
Level of Service

Count Date:
Conditions: Existing Saturday
Design Year:

Location: Randolph Rd. @ Parklawn Dr.
Computed By: JB
Date: 1/25/13

Montgomery County Method

Morning Peak Hour 7:15-8:15 am

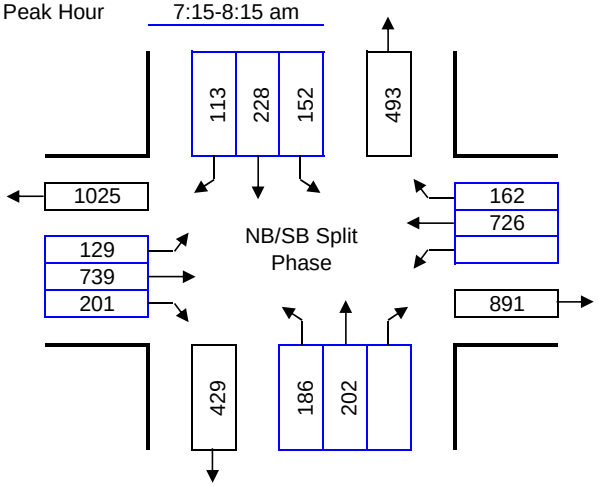

Lane Configuration

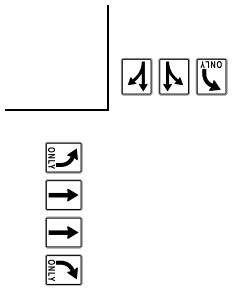

Evening Peak Hour 5:00-6:00 pm

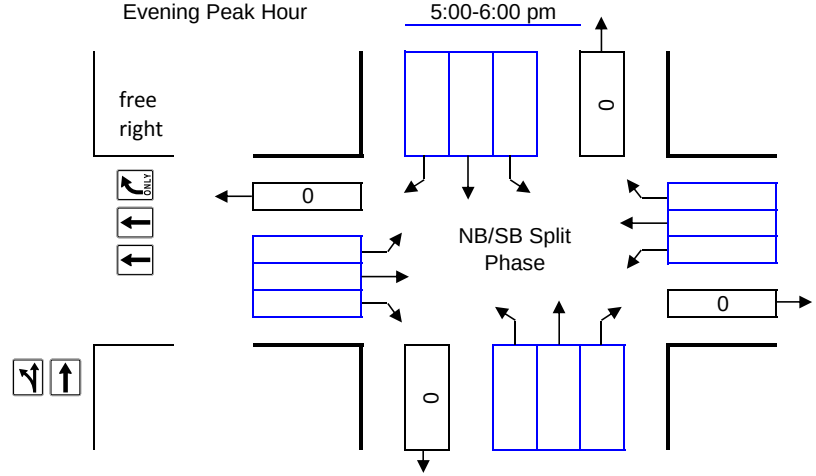

Right Turns Subtracted for Exclusive Right Turn Overlap Phasing or Right Turn on Red:

	AM	PM
NB Approach:	NB	NB
SB Approach:	SB	SB
EB Approach:	EB	EB
WB Approach:	WB	WB

Number of Lanes	Lane Use Factor
1 =	1.00
2 =	0.53
3 =	0.37
4 =	0.30
Dbl-left	0.60

Congestion Standard = 1550 for North Bethesda Policy Area

Opposing Volume (vph)		PCE
≤	199	1.1
≤	599	2.0
≤	799	3.0
≤	999	4.0
≥	1000	5.0

Movement	Volume	PCE	Lane Use Factor	Lane Volume	Opposing Lefts	Critical Lane Volume	*
NBLT	388	1.00	0.53	206	0	206	*
SBLTR	493	1.00	0.37	182	0	182	*
EBT	739	1.00	0.53	392	0	392	
WBT + EBL	726	1.00	0.53	385	129	514	*
					Critical Volume	902	OK
					V/C	0.58	

Movement	Volume	PCE	Lane Use Factor	Lane Volume	Opposing Lefts	Critical Lane Volume	*
					Critical Volume	0	OK
					V/C	0.00	

Maryland State Highway Administration
Turning Movement Summary and
Level of Service

Count Date:
Conditions:
Design Year: EXISTING

Location: Randolph @ Lauderdale

Computed By: BJM

Date: 1/25/13

Montgomery County Method

Morning Peak Hour 7:15-8:15 am

Lane Configuration

Evening Peak Hour 5:00-6:00 pm

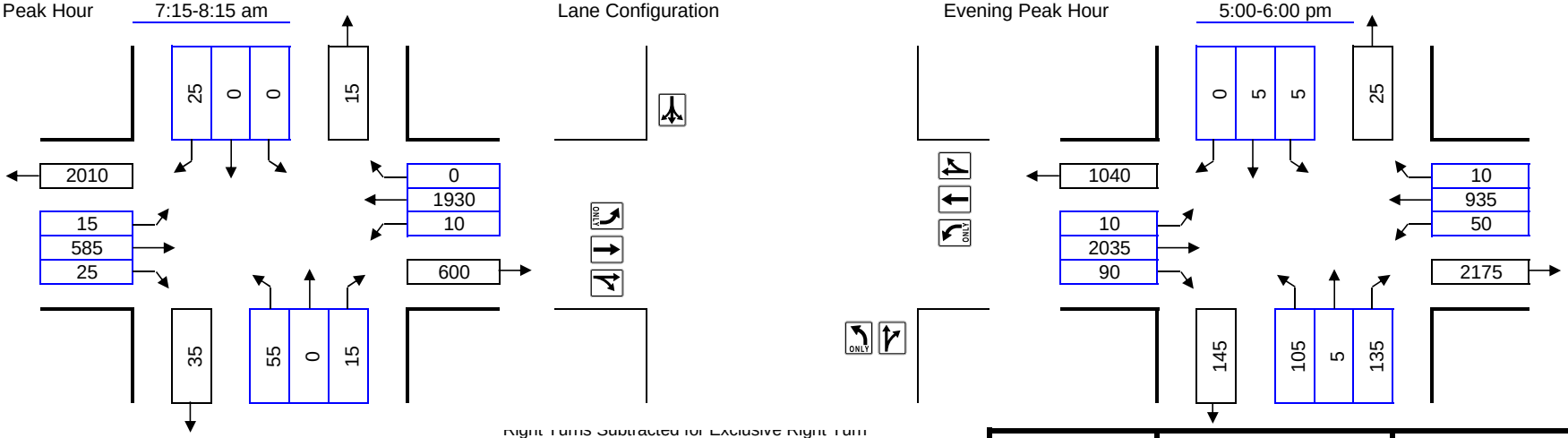

Right Turns Subtracted for Exclusive Right Turn Overlap Phasing or Right Turn on Red and Free Rights:

	AM	PM
NB Approach:	NB	NB
SB Approach:	SB	SB
EB Approach:	EB	EB
WB Approach:	WB	WB

Number of Lanes	Lane Use Factor
1 =	1.00
2 =	0.53
3 =	0.37
4 =	0.30
Dbl-left	0.60

Congestion Standard = 1550 for North Bethesda Policy Area

Opposing Volume (vph)		PCE
≤	199	1.1
≤	599	2.0
≤	799	3.0
≤	999	4.0
≥	1000	5.0

Movement	Volume	PCE	Lane Use Factor	Lane Volume	Opposing Lefts	Critical Lane Volume	*
NBTR	15	1.00	1.00	15	0	15	
SBTR + NBL	25	1.00	1.00	25	55	80	*
EBTR + WBL	610	1.00	0.53	323	10	333	
WBT + EBL	1930	1.00	0.53	1023	15	1038	*
					Critical Volume	1118	OK
					V/C	0.72	

Movement	Volume	PCE	Lane Use Factor	Lane Volume	Opposing Lefts	Critical Lane Volume	*
NBTR + SBL	140	1.00	1.00	140	5	145	*
SBLT + NBL	10	1.00	1.00	10	105	115	
EBTR + WBL	2125	1.00	0.53	1126	50	1176	*
WBTR + EBL	945	1.00	0.53	501	10	511	
					Critical Volume	1321	OK
					V/C	0.85	

Maryland State Highway Administration
Turning Movement Summary and Level of Service

Count Date:
Conditions: EXISTING Saturday
Design Year:

Location: Randolph @ Lauderdale
Computed By: BJM
Date: 4/3/14

Montgomery County Method

Morning Peak Hour 7:15-8:15 am

Lane Configuration

Evening Peak Hour 5:00-6:00 pm

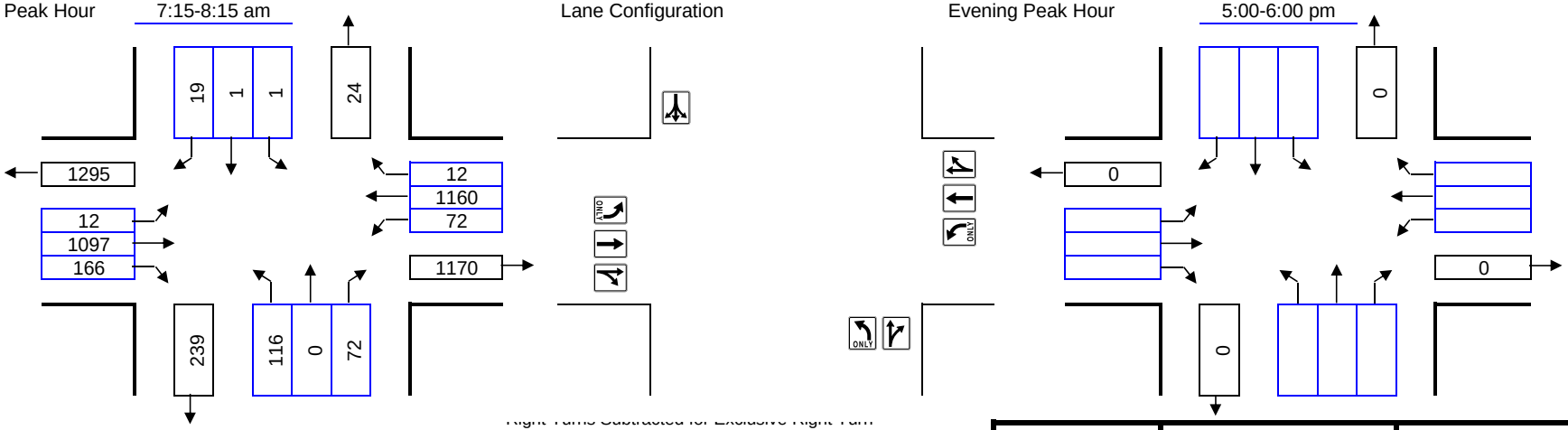

Right Turns Subtracted for Exclusive Right Turn Overlap Phasing or Right Turn on Red and Free Rights:

	AM	PM
NB Approach:	NB	NB
SB Approach:	SB	SB
EB Approach:	EB	EB
WB Approach:	WB	WB

Number of Lanes	Lane Use Factor		Opposing Volume (vph)		PCE
1 =	1.00	Congestion Standard	≤	199	1.1
2 =	0.53	= 1550	≤	599	2.0
3 =	0.37	for	≤	799	3.0
4 =	0.30	North Bethesda	≤	999	4.0
Dbl-left	0.60	Policy	≥	1000	5.0
		Area			

Movement	Volume	PCE	Lane Use Factor	Lane Volume	Opposing Lefts	Critical Lane Volume	*
NBTR + SBL	72	1.00	1.00	72	1	73	
SBLTR + NBL	21	1.00	1.00	21	116	137	*
EBTR + WBL	1263	1.00	0.53	669	72	741	*
WBTR + EBL	1172	1.00	0.53	621	12	633	
					Critical Volume	878	OK
					V/C	0.57	

Movement	Volume	PCE	Lane Use Factor	Lane Volume	Opposing Lefts	Critical Lane Volume	*
					Critical Volume	0	OK
					V/C	0.00	

Maryland State Highway Administration
Turning Movement Summary and
Level of Service

Count Date:
Conditions: Existing
Design Year:

Location: Old Georgetown Road @ Executive Blvd.
Computed By: JB
Date: 1/25/13

Montgomery County Method

Morning Peak Hour 7:00-8:00 am

Lane Configuration

Evening Peak Hour 5:00-6:00 pm

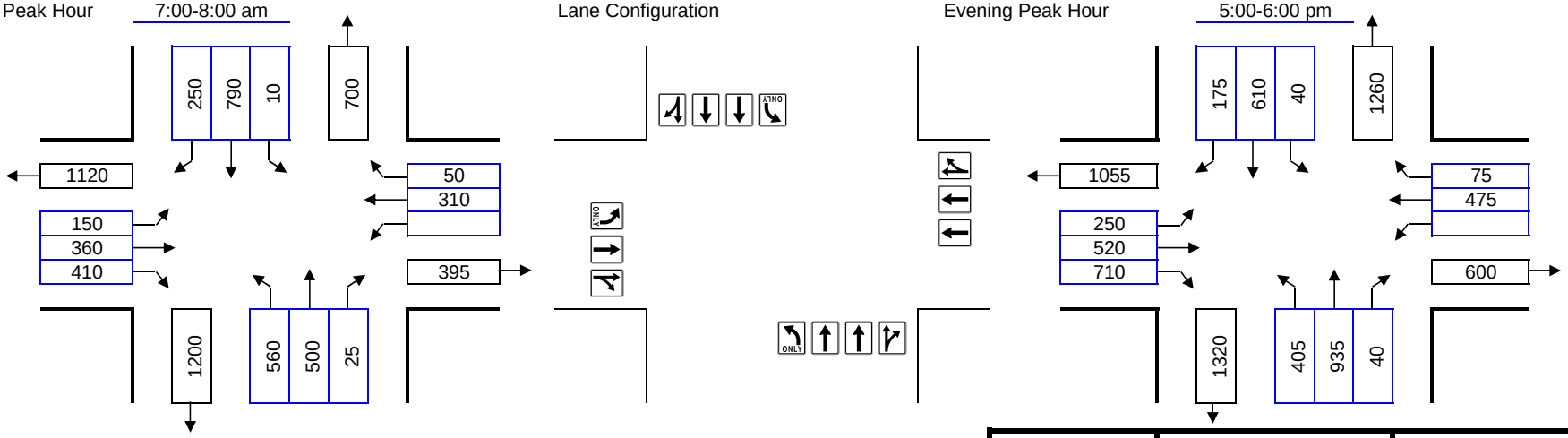

Right Turns Subtracted for Exclusive Right Turn
Overlap Phasing or Right Turn on Red:

	AM	PM
NB Approach:	NB	NB
SB Approach:	SB	SB
EB Approach:	EB	EB
WB Approach:	WB	WB

Number of Lanes	Lane Use Factor
1 =	1.00
2 =	0.53
3 =	0.37
4 =	0.30
Dbl-left	0.60

Congestion Standard = 1800 for White Flint Policy Area

	Opposing Volume (vph)	PCE
≤	199	1.1
≤	599	2.0
≤	799	3.0
≤	999	4.0
≥	1000	5.0

Movement	Volume	PCE	Lane Use Factor	Lane Volume	Opposing Lefts	Critical Lane Volume	*
NBTR + SBL	525	1.00	0.37	194	10	204	
SBTR + NBL	1040	1.00	0.37	385	560	945	*
EBR	410	1.00	1.00	410	0	410	*
WBTR + EBL	360	1.00	0.37	133	150	283	
					Critical Volume	1355	OK
					V/C	0.75	

De facto RT lane(s) assumed for EB approach.

Movement	Volume	PCE	Lane Use Factor	Lane Volume	Opposing Lefts	Critical Lane Volume	*
NBTR + SBL	975	1.00	0.37	361	40	401	
SBTR + NBL	785	1.00	0.37	290	405	695	*
EBR	710	1.00	1.00	710	0	710	*
WBTR + EBL	550	1.00	0.37	204	250	454	
					Critical Volume	1405	OK
					V/C	0.78	

De facto RT lane(s) assumed for EB approach.

Maryland State Highway Administration
Turning Movement Summary and
Level of Service

Count Date:
Conditions: Existing SATURDAY
Design Year:

Location: Old Georgetown Road @ Executive Blvd.

Computed By: JB Date: 4/3/14

Montgomery County Method

Morning Peak Hour 7:00-8:00 am

Lane Configuration

Evening Peak Hour 5:00-6:00 pm

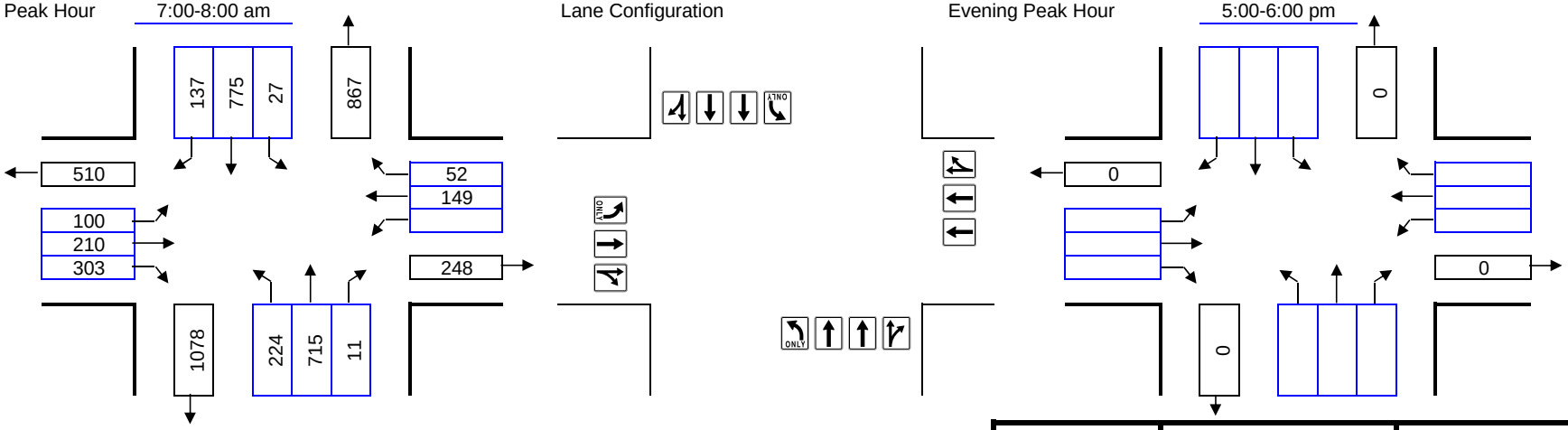

Right Turns Subtracted for Exclusive Right Turn Overlap Phasing or Right Turn on Red:

	AM	PM
NB Approach:	NB	NB
SB Approach:	SB	SB
EB Approach:	EB	EB
WB Approach:	WB	WB

Number of Lanes	Lane Use Factor		Opposing Volume (vph)		PCE
1 =	1.00	Congestion Standard	≤	199	1.1
2 =	0.53	= 1800	≤	599	2.0
3 =	0.37	for	≤	799	3.0
4 =	0.30	White Flint	≤	999	4.0
Dbl-left	0.60	Policy	≥	1000	5.0
		Area			

Movement	Volume	PCE	Lane Use Factor	Lane Volume	Opposing Lefts	Critical Lane Volume	*
NBTR + SBL	726	1.00	0.37	269	27	296	
SBTR + NBL	912	1.00	0.37	337	224	561	*
EBR	303	1.00	1.00	303	0	303	*
WBTR + EBL	201	1.00	0.37	74	100	174	
					Critical Volume	864	OK
					V/C	0.48	

De facto RT lane(s) assumed for EB approach.

Movement	Volume	PCE	Lane Use Factor	Lane Volume	Opposing Lefts	Critical Lane Volume	*
					Critical Volume	0	OK
					V/C	0.00	

Maryland State Highway Administration
Turning Movement Summary and
Level of Service

Count Date:
Conditions: Existing
Design Year:

Location: Old Georgetown Road @ Executive Blvd./Mid Pike

Computed By: LL Date: 4/3/14

Montgomery County Method

Morning Peak Hour 7:00-8:00 am

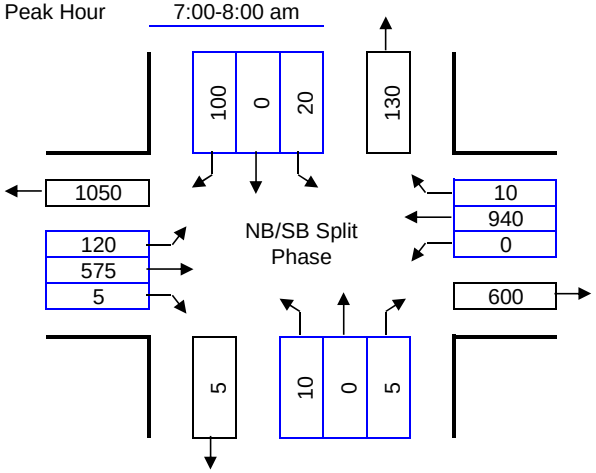

Lane Configuration

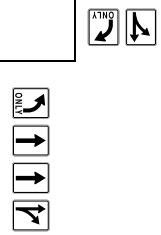

Evening Peak Hour 5:00-6:00 pm

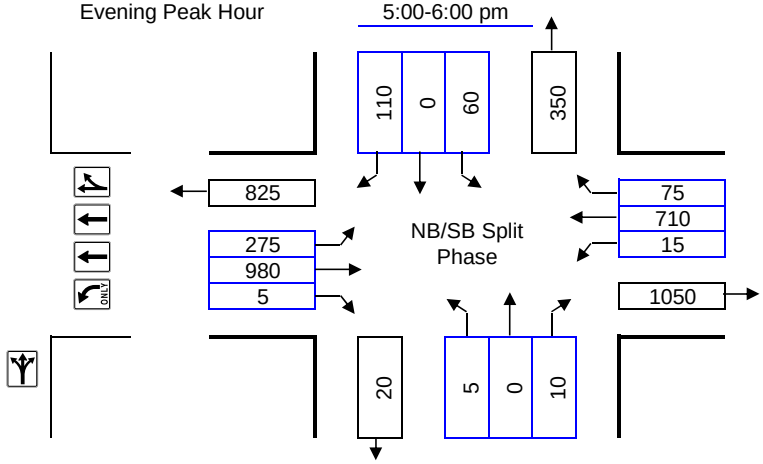

Right Turns Subtracted for Exclusive Right Turn Overlap Phasing or Right Turn on Red:

	AM	PM
NB Approach:	NB	NB
SB Approach:	SB	SB
EB Approach:	EB	EB
WB Approach:	WB	WB

Number of Lanes	Lane Use Factor		Opposing Volume (vph)		PCE
1 =	1.00	Congestion Standard	≤	199	1.1
2 =	0.53	= 1800	≤	599	2.0
3 =	0.37	for	≤	799	3.0
4 =	0.30	White Flint	≤	999	4.0
Dbl-left	0.60	Policy	≥	1000	5.0
		Area			

Movement	Volume	PCE	Lane Use Factor	Lane Volume	Opposing Lefts	Critical Lane Volume	*
NBLTR	15	1.00	1.00	15	0	15	*
SBR	100	1.00	1.00	100	0	100	*
EBTR	580	1.00	0.37	215	0	215	
WBTR + EBL	950	1.00	0.37	352	120	472	*
					Critical Volume	587	OK
					V/C	0.33	

Movement	Volume	PCE	Lane Use Factor	Lane Volume	Opposing Lefts	Critical Lane Volume	*
NBLTR	15	1.00	1.00	15	0	15	*
SBR	110	1.00	1.00	110	0	110	*
EBTR + WBL	985	1.00	0.37	364	15	379	
WBTR + EBL	785	1.00	0.37	290	275	565	*
					Critical Volume	690	OK
					V/C	0.38	

Maryland State Highway Administration
Turning Movement Summary and
Level of Service

Count Date:
Conditions: Existing Saturday
Design Year:

Location: Old Georgetown Road @ Executive Blvd./Mid Pike

Computed By: LL Date: 4/3/14

Montgomery County Method

Morning Peak Hour 7:00-8:00 am

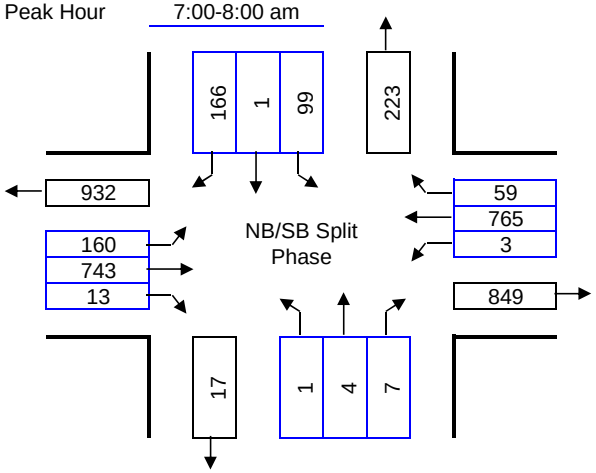

Lane Configuration

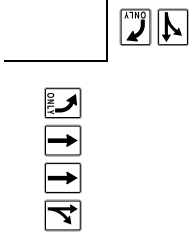

Evening Peak Hour 5:00-6:00 pm

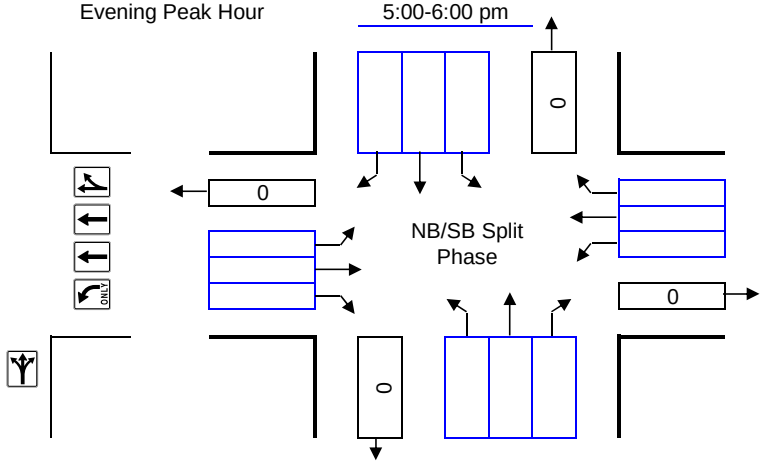

Right Turns Subtracted for Exclusive Right Turn Overlap Phasing or Right Turn on Red:

	AM	PM
NB Approach:	NB	NB
SB Approach:	SB	SB
EB Approach:	EB	EB
WB Approach:	WB	WB

Number of Lanes	Lane Use Factor		Opposing Volume (vph)		PCE
1 =	1.00	Congestion Standard	≤	199	1.1
2 =	0.53	= 1800	≤	599	2.0
3 =	0.37	for	≤	799	3.0
4 =	0.30	White Flint	≤	999	4.0
Dbl-left	0.60	Policy Area	≥	1000	5.0

Movement	Volume	PCE	Lane Use Factor	Lane Volume	Opposing Lefts	Critical Lane Volume	*
NBLTR	12	1.00	1.00	12	0	12	*
SBR	166	1.00	1.00	166	0	166	*
EBTR + WBL	756	1.00	0.37	280	3	283	
WBTR + EBL	824	1.00	0.37	305	160	465	*
					Critical Volume	643	OK
					V/C	0.36	

Movement	Volume	PCE	Lane Use Factor	Lane Volume	Opposing Lefts	Critical Lane Volume	*
					Critical Volume	0	OK
					V/C	0.00	

Maryland State Highway Administration
Turning Movement Summary and
Level of Service

Count Date:
Conditions: Existing
Design Year:

Location: Old Georgetown @ Nebel

Computed By: LL Date: 4/3/14

Montgomery County Method

Morning Peak Hour 7:15-8:15 am

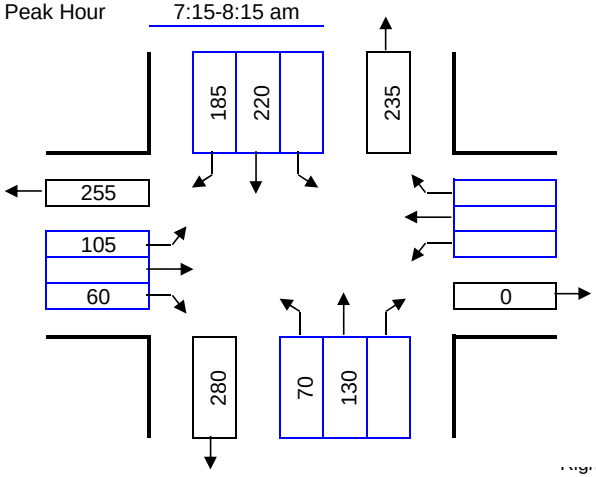

Lane Configuration

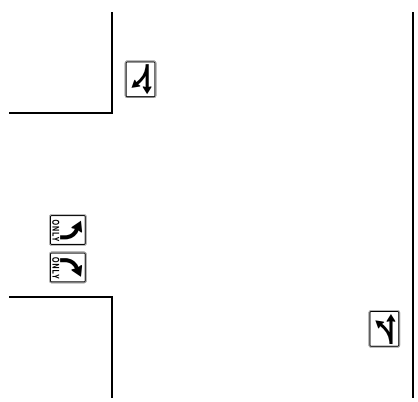

Evening Peak Hour 5:00-6:00 pm

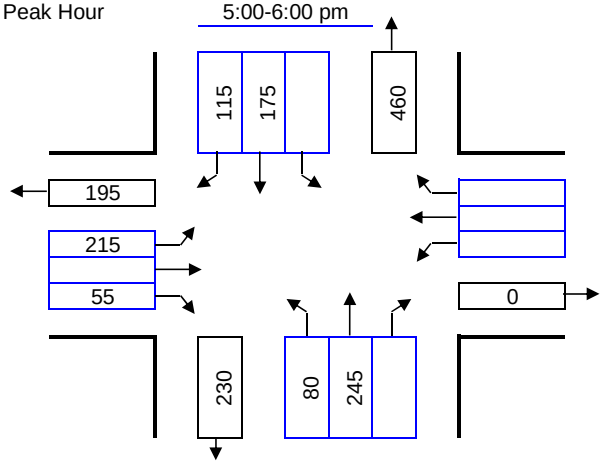

Right Turns Subtracted for Exclusive Right Turn Overlap Phasing or Right Turn on Red and Free Rights:

	AM	PM
NB Approach:	NB	NB
SB Approach:	SB	SB
EB Approach:	EB	EB
WB Approach:	WB	WB

Number of Lanes	Lane Use Factor		Opposing Volume (vph)		PCE
1 =	1.00	Congestion Standard	≤	199	1.1
2 =	0.53	= 1800	≤	599	2.0
3 =	0.37	for	≤	799	3.0
4 =	0.30	White Flint	≤	999	4.0
Dbl-left	0.60	Policy Area	≥	1000	5.0

Movement	Volume	PCE	Lane Use Factor	Lane Volume	Opposing Lefts	Critical Lane Volume	*
NBLT	200	1.00	1.00	200	0	200	
SBTR + NBL	405	1.00	1.00	405	70	475	*
EBL	105	1.00	1.00	105	0	105	*
					Critical Volume	580	OK
						V/C	0.32

Movement	Volume	PCE	Lane Use Factor	Lane Volume	Opposing Lefts	Critical Lane Volume	*
NBLT	325	1.00	1.00	325	0	325	
SBTR + NBL	290	1.00	1.00	290	80	370	*
EBL	215	1.00	1.00	215	0	215	*
					Critical Volume	585	OK
						V/C	0.33

Maryland State Highway Administration
Turning Movement Summary and
Level of Service

Count Date:
Conditions: Existing Saturday
Design Year:

Location: Old Georgetown @ Nebel

Computed By: LL Date: 4/3/14

Montgomery County Method

Morning Peak Hour 7:15-8:15 am

Lane Configuration

Evening Peak Hour 5:00-6:00 pm

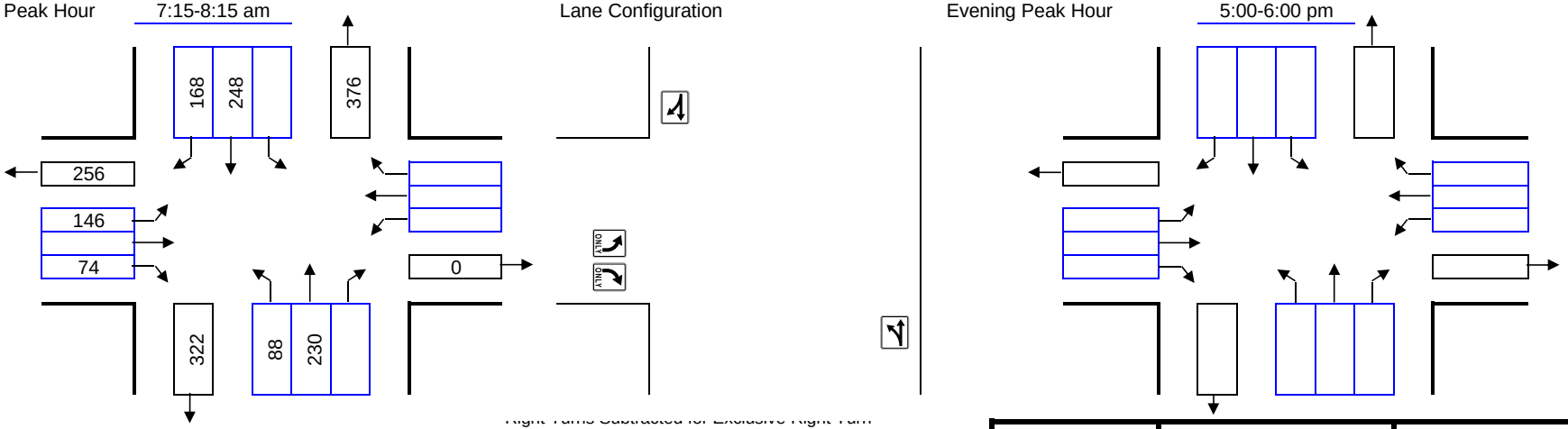

Right Turns Subtracted for Exclusive Right Turn Overlap Phasing or Right Turn on Red and Free Rights:

	AM	PM
NB Approach:	NB	NB
SB Approach:	SB	SB
EB Approach:	EB	EB
WB Approach:	WB	WB

Number of Lanes	Lane Use Factor		Opposing Volume (vph)		PCE
1 =	1.00	Congestion Standard	≤	199	1.1
2 =	0.53	= 1800	≤	599	2.0
3 =	0.37	for	≤	799	3.0
4 =	0.30	White Flint	≤	999	4.0
Dbl-left	0.60	Policy	≥	1000	5.0
		Area			

Movement	Volume	PCE	Lane Use Factor	Lane Volume	Opposing Lefts	Critical Lane Volume	*
NBLT	318	1.00	1.00	318	0	318	
SBTR + NBL	416	1.00	1.00	416	88	504	*
EBL	146	1.00	1.00	146	0	146	*
					Critical Volume	650	OK
						V/C	0.36

Movement	Volume	PCE	Lane Use Factor	Lane Volume	Opposing Lefts	Critical Lane Volume	*
					0		
					Critical Volume	0	OK
						V/C	

Maryland State Highway Administration
Turning Movement Summary and
Level of Service

Count Date:
Conditions: Existing
Design Year:

Location: Old Georgetown Road @ Nicholson Ln

Computed By: JB Date: 1/25/13

Montgomery County Method

Morning Peak Hour 7:00-8:00 am

Lane Configuration

Evening Peak Hour 5:00-6:00 pm

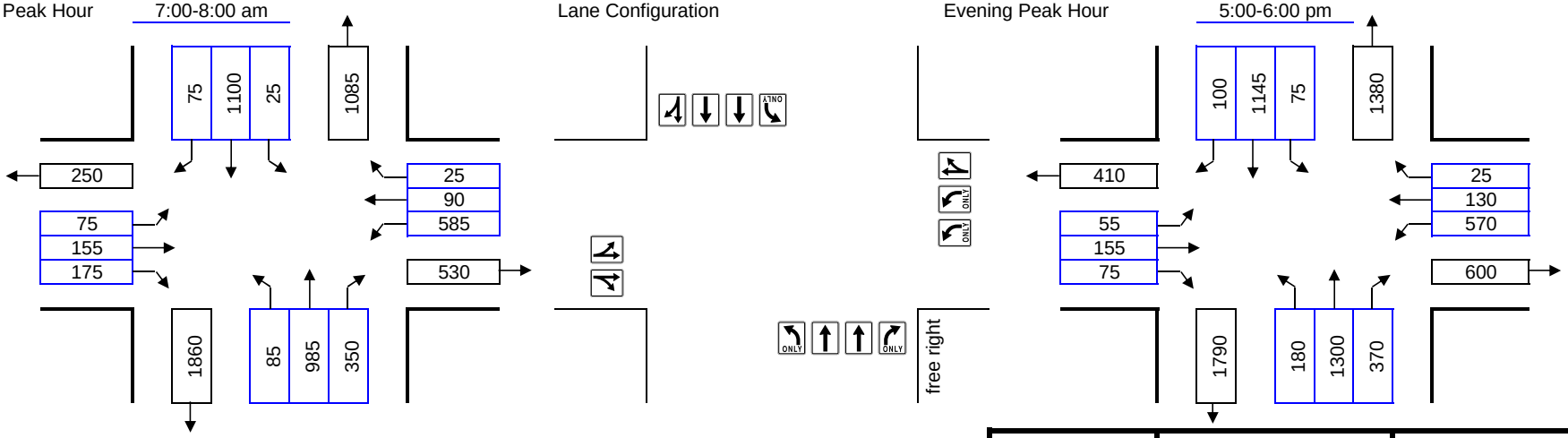

Right Turns Subtracted for Exclusive Right Turn
Overlap Phasing or Right Turn on Red:

	AM	PM
NB Approach:	NB	NB
SB Approach:	SB	SB
EB Approach:	EB	EB
WB Approach:	WB	WB

Number of Lanes	Lane Use Factor
1 =	1.00
2 =	0.53
3 =	0.37
4 =	0.30
Dbl-left	0.60

Congestion Standard = 1800 for White Flint Policy Area

Opposing Volume (vph)		PCE
≤	199	1.1
≤	599	2.0
≤	799	3.0
≤	999	4.0
≥	1000	5.0

Movement	Volume	PCE	Lane Use Factor	Lane Volume	Opposing Lefts	Critical Lane Volume	*
NBT + SBL	985	1.00	0.53	522	25	547	*
SBTR + NBL	1175	1.00	0.37	435	85	520	
EBLTR + WBL	405	1.10	0.53	219	351	570	*
WBTR + EBL	115	1.00	1.00	115	75	190	
					Critical Volume	1117	OK
					V/C	0.62	

Movement	Volume	PCE	Lane Use Factor	Lane Volume	Opposing Lefts	Critical Lane Volume	*
NBT + SBL	1300	1.00	0.53	689	75	764	*
SBTR + NBL	1245	1.00	0.37	461	180	641	
EBLTR + WBL	285	1.10	0.53	154	342	496	*
WBTR + EBL	155	1.00	1.00	155	55	210	
					Critical Volume	1260	OK
					V/C	0.70	

Maryland State Highway Administration
Turning Movement Summary and
Level of Service

Count Date:
Conditions: Existing SATURDAY
Design Year:

Location: Old Georgetown Road @ Nicholson Ln
Computed By: JB
Date: 1/25/13

Montgomery County Method

Morning Peak Hour 7:00-8:00 am

Lane Configuration

Evening Peak Hour 5:00-6:00 pm

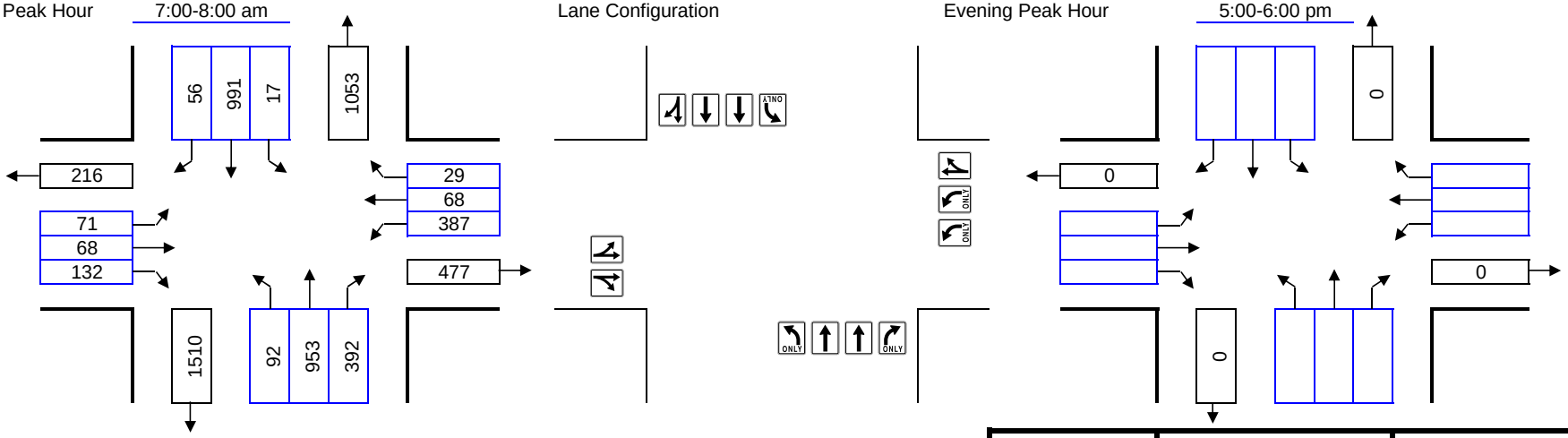

Right Turns Subtracted for Exclusive Right Turn Overlap Phasing or Right Turn on Red:

	AM	PM
NB Approach:	NB	NB
SB Approach:	SB	SB
EB Approach:	EB	EB
WB Approach:	WB	WB

Number of Lanes	Lane Use Factor
1 =	1.00
2 =	0.53
3 =	0.37
4 =	0.30
Dbl-left	0.60

Congestion Standard = 1800 for White Flint Policy Area

Opposing Volume (vph)		PCE
≤	199	1.1
≤	599	2.0
≤	799	3.0
≤	999	4.0
≥	1000	5.0

Movement	Volume	PCE	Lane Use Factor	Lane Volume	Opposing Lefts	Critical Lane Volume	*
NBT + SBL	953	1.00	0.53	505	17	522	*
SBTR + NBL	1047	1.00	0.37	387	92	479	
EBLTR + WBL	271	1.10	0.53	147	232	379	*
WBTR + EBL	97	1.00	1.00	97	71	168	
					Critical Volume	901	OK
					V/C	0.50	

Movement	Volume	PCE	Lane Use Factor	Lane Volume	Opposing Lefts	Critical Lane Volume	*
					Critical Volume	0	OK
					V/C	0.00	

Maryland State Highway Administration
Turning Movement Summary and
Level of Service

Count Date:
Conditions: Existing
Design Year:

Location: Nicholson Ln @ Executive Blvd.

Computed By: JB Date: 1/25/13

Montgomery County Method

Morning Peak Hour 7:00-8:00 am

Lane Configuration

Evening Peak Hour 5:00-6:00 pm

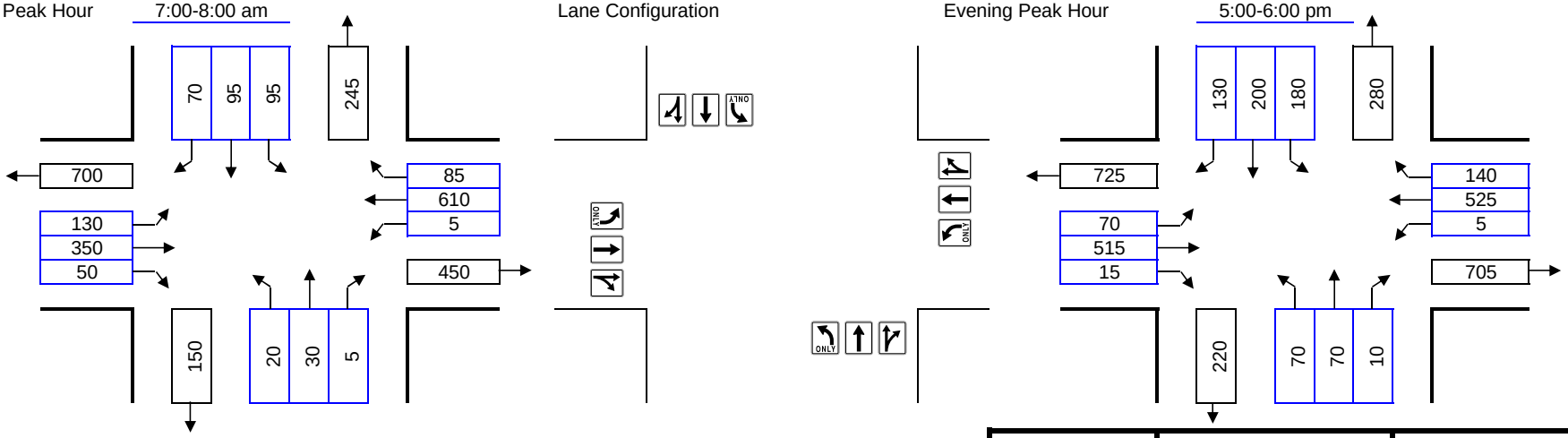

Right Turns Subtracted for Exclusive Right Turn Overlap Phasing or Right Turn on Red:

	AM	PM
NB Approach:	NB	NB
SB Approach:	SB	SB
EB Approach:	EB	EB
WB Approach:	WB	WB

Number of Lanes	Lane Use Factor		Opposing Volume (vph)		PCE
1 =	1.00	Congestion Standard	≤	199	1.1
2 =	0.53	= 1800	≤	599	2.0
3 =	0.37	for	≤	799	3.0
4 =	0.30	White Flint	≤	999	4.0
Dbl-left	0.60	Policy	≥	1000	5.0
		Area			

Movement	Volume	PCE	Lane Use Factor	Lane Volume	Opposing Lefts	Critical Lane Volume	*
NBTR + SBL	35	1.00	0.53	19	95	114	*
SBTR + NBL	165	1.00	0.53	87	20	107	
EBTR + WBL	400	1.00	0.53	212	5	217	
WBTR + EBL	695	1.00	0.53	368	130	498	*
					Critical Volume	612	OK
					V/C	0.34	

Movement	Volume	PCE	Lane Use Factor	Lane Volume	Opposing Lefts	Critical Lane Volume	*
NBTR + SBL	80	1.00	0.53	42	180	222	
SBTR + NBL	330	1.00	0.53	175	70	245	*
EBTR + WBL	530	1.00	0.53	281	5	286	
WBTR + EBL	665	1.00	0.53	352	70	422	*
					Critical Volume	667	OK
					V/C	0.37	

Maryland State Highway Administration
Turning Movement Summary and
Level of Service

Count Date:
Conditions: Existing Saturday
Design Year:

Location: Nicholson Ln @ Executive Blvd.
Computed By: JB
Date: 1/25/13

Montgomery County Method

Morning Peak Hour 7:00-8:00 am

Lane Configuration

Evening Peak Hour 5:00-6:00 pm

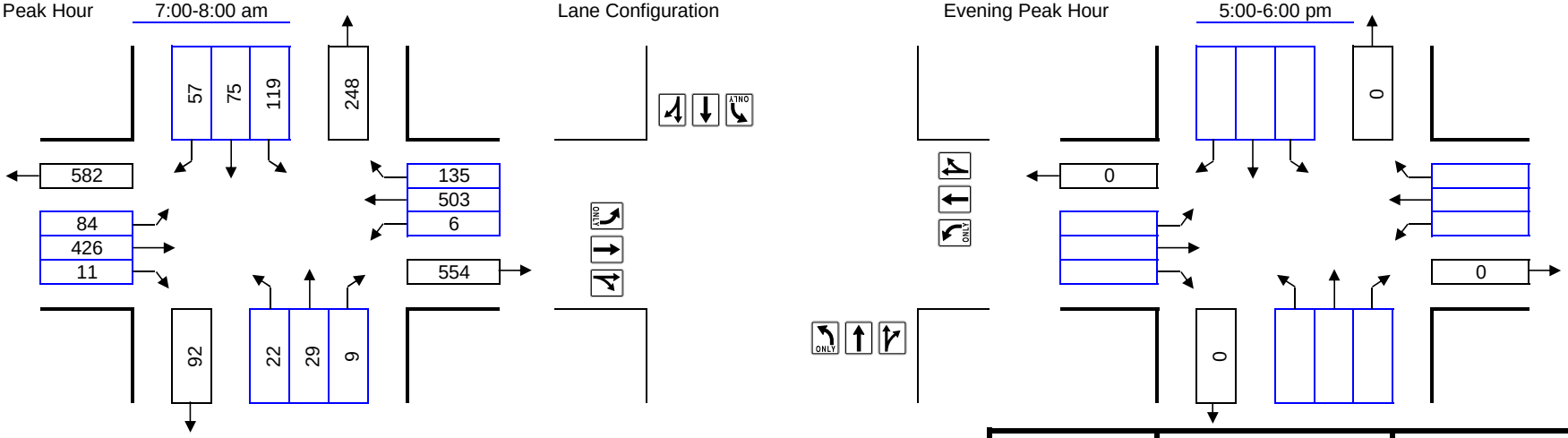

Right Turns Subtracted for Exclusive Right Turn Overlap Phasing or Right Turn on Red:

	AM	PM
NB Approach:	NB	NB
SB Approach:	SB	SB
EB Approach:	EB	EB
WB Approach:	WB	WB

Number of Lanes	Lane Use Factor
1 =	1.00
2 =	0.53
3 =	0.37
4 =	0.30
Dbl-left	0.60

Congestion Standard = 1800 for White Flint Policy Area

Opposing Volume (vph)		PCE
≤	199	1.1
≤	599	2.0
≤	799	3.0
≤	999	4.0
≥	1000	5.0

Movement	Volume	PCE	Lane Use Factor	Lane Volume	Opposing Lefts	Critical Lane Volume	*
NBTR + SBL	38	1.00	0.53	20	119	139	*
SBTR + NBL	132	1.00	0.53	70	22	92	
EBTR + WBL	437	1.00	0.53	232	6	238	
WBTR + EBL	638	1.00	0.53	338	84	422	*
					Critical Volume	561	OK
					V/C	0.31	

Movement	Volume	PCE	Lane Use Factor	Lane Volume	Opposing Lefts	Critical Lane Volume	*
					Critical Volume	0	OK
					V/C	0.00	

Maryland State Highway Administration
Turning Movement Summary and Level of Service

Count Date:
Conditions: Existing
Design Year:

Location: Nicholson @ Nebel
Computed By: LL
Date: 4/3/14

Montgomery County Method

Morning Peak Hour 7:15-8:15 am

Lane Configuration

Evening Peak Hour 5:00-6:00 pm

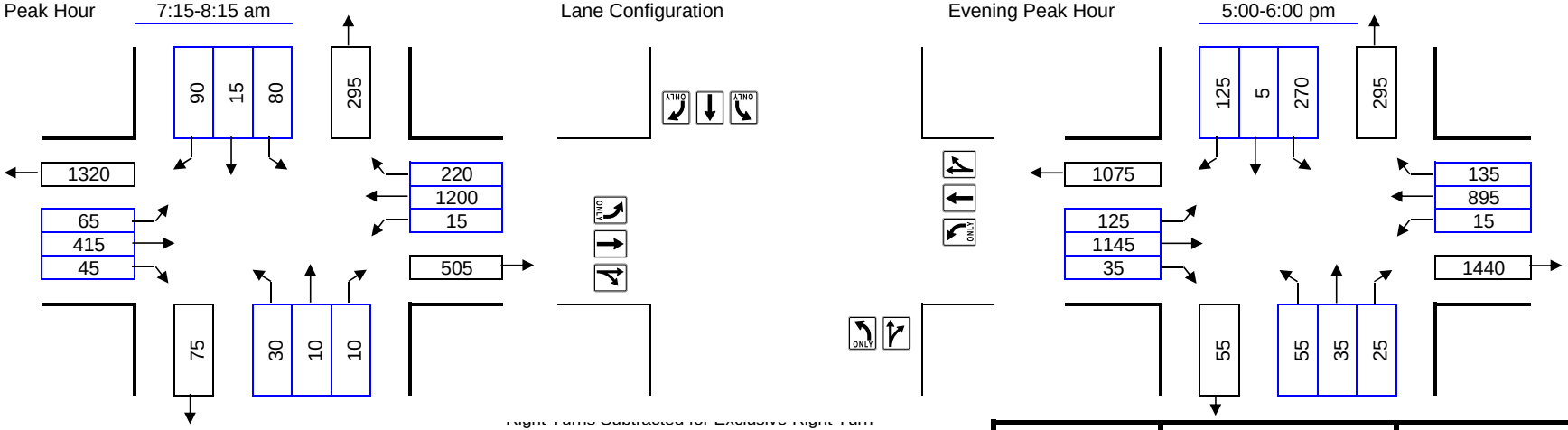

Right Turns Subtracted for Exclusive Right Turn Overlap Phasing or Right Turn on Red and Free Rights:

	AM	PM
NB Approach:	NB	NB
SB Approach:	SB	SB
EB Approach:	EB	EB
WB Approach:	WB	WB

Number of Lanes	Lane Use Factor		Opposing Volume (vph)		PCE
1 =	1.00	Congestion Standard	≤	199	1.1
2 =	0.53	= 1800	≤	599	2.0
3 =	0.37	for	≤	799	3.0
4 =	0.30	White Flint	≤	999	4.0
Dbl-left	0.60	Policy Area	≥	1000	5.0

Movement	Volume	PCE	Lane Use Factor	Lane Volume	Opposing Lefts	Critical Lane Volume	*
NBTR + SBL	20	1.00	1.00	20	80	100	
SBR + NBL	90	1.00	1.00	90	30	120	*
EBTR + WBL	460	1.00	0.53	244	15	259	
WBTR + EBL	1420	1.00	0.53	753	65	818	*
					Critical Volume	938	OK
					V/C	0.52	

Movement	Volume	PCE	Lane Use Factor	Lane Volume	Opposing Lefts	Critical Lane Volume	*
NBTR + SBL	60	1.00	1.00	60	270	330	*
SBR + NBL	125	1.00	1.00	125	55	180	
EBTR + WBL	1180	1.00	0.53	625	15	640	
WBTR + EBL	1030	1.00	0.53	546	125	671	*
					Critical Volume	1001	OK
					V/C	0.56	

Maryland State Highway Administration
Turning Movement Summary and
Level of Service

Count Date:
Conditions: Existing Saturday
Design Year:

Location: Nicholson @ Nebel

Computed By: LL

Date: 4/3/14

Montgomery County Method

Morning Peak Hour 7:15-8:15 am

Lane Configuration

Evening Peak Hour 5:00-6:00 pm

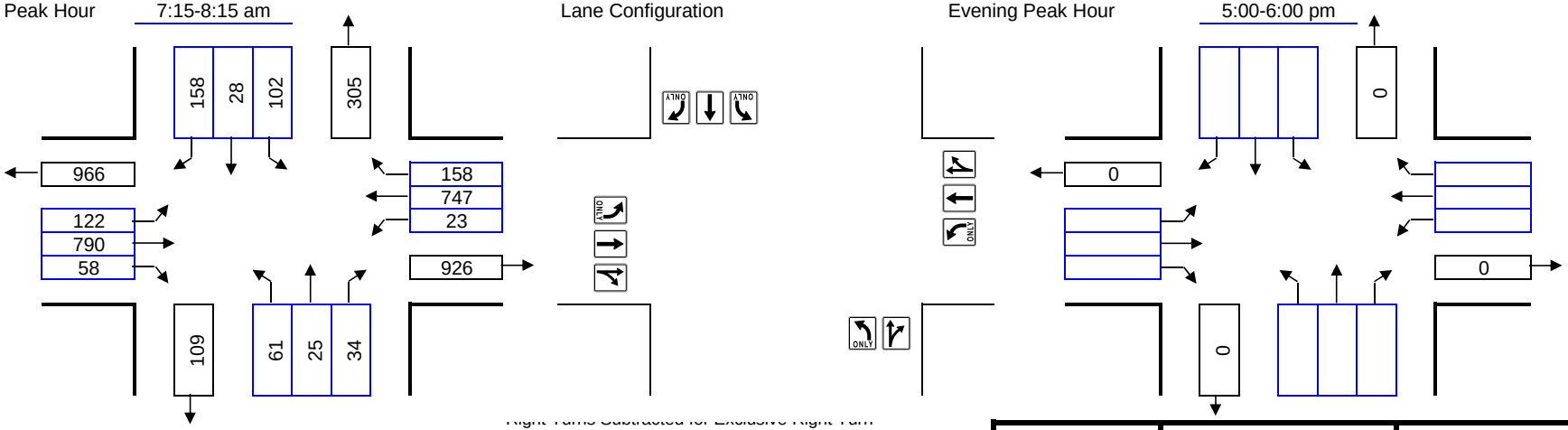

Right Turns Subtracted for Exclusive Right Turn Overlap Phasing or Right Turn on Red and Free Rights:

	AM	PM
NB Approach:	NB	NB
SB Approach:	SB 122	SB
EB Approach:	EB	EB
WB Approach:	WB	WB

Number of Lanes	Lane Use Factor		Opposing Volume (vph)		PCE
1 =	1.00	Congestion Standard	≤	199	1.1
2 =	0.53	= 1800	≤	599	2.0
3 =	0.37	for	≤	799	3.0
4 =	0.30	White Flint	≤	999	4.0
Dbl-left	0.60	Policy Area	≥	1000	5.0

Movement	Volume	PCE	Lane Use Factor	Lane Volume	Opposing Lefts	Critical Lane Volume	*
NBTR + SBL	59	1.00	1.00	59	102	161	*
SBR + NBL	36	1.00	1.00	36	61	97	
EBTR + WBL	848	1.00	0.53	449	23	472	
WBTR + EBL	905	1.00	0.53	480	122	602	*
					Critical Volume	763	OK
					V/C	0.42	

Movement	Volume	PCE	Lane Use Factor	Lane Volume	Opposing Lefts	Critical Lane Volume	*
					Critical Volume	0	OK
					V/C	0.00	

Maryland State Highway Administration
Turning Movement Summary and Level of Service

Count Date:
Conditions: Existing
Design Year:

Location: Old Georgetown Rd @ Poindexter Ln

Computed By: JB Date: 4/3/14

Montgomery County Method

Morning Peak Hour 7:00-8:00 am

Lane Configuration

Evening Peak Hour 5:00-6:00 pm

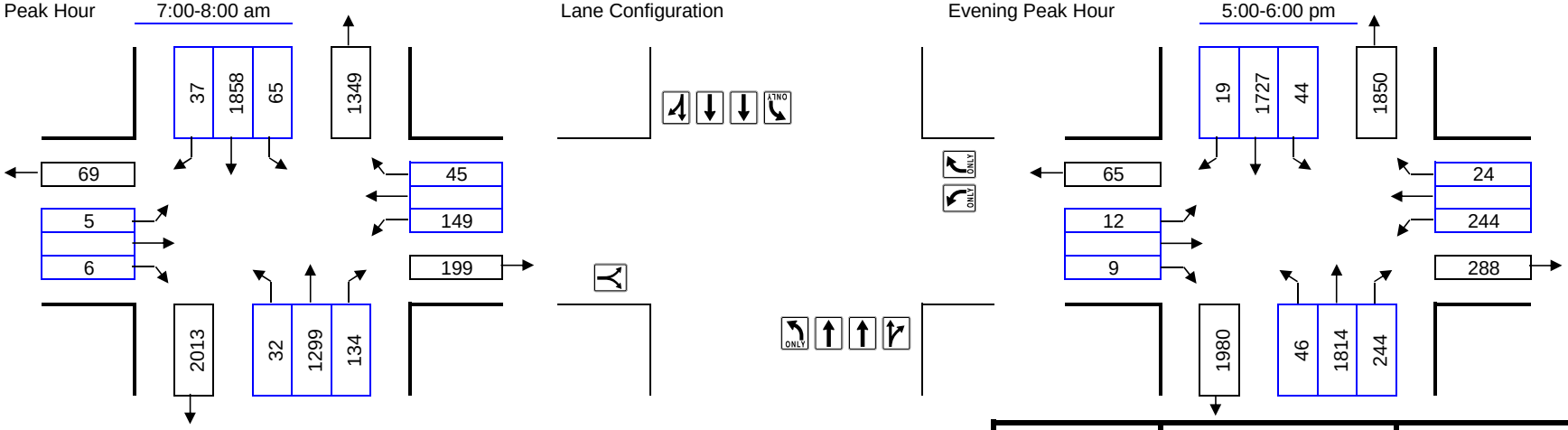

Right Turns Subtracted for Exclusive Right Turn Overlap Phasing or Right Turn on Red:

	AM	PM
NB Approach:	NB	NB
SB Approach:	SB	SB
EB Approach:	EB	EB
WB Approach:	WB	WB

Number of Lanes	Lane Use Factor		Opposing Volume (vph)		PCE
1 =	1.00	Congestion Standard	≤	199	1.1
2 =	0.53	= 1550	≤	599	2.0
3 =	0.37	for	≤	799	3.0
4 =	0.30	North Bethesda	≤	999	4.0
Dbl-left	0.60	Policy	≥	1000	5.0
		Area			

Movement	Volume	PCE	Lane Use Factor	Lane Volume	Opposing Lefts	Critical Lane Volume	*
NBTR + SBL	1433	1.00	0.37	530	65	595	
SBTR + NBL	1895	1.00	0.37	701	32	733	*
EBLR + WBL	11	1.10	1.00	12	149	161	*
WBR + EBL	45	1.00	1.00	45	5	50	
					Critical Volume	894	OK
					V/C	0.58	

Movement	Volume	PCE	Lane Use Factor	Lane Volume	Opposing Lefts	Critical Lane Volume	*
NBTR + SBL	2058	1.00	0.37	761	44	805	*
SBTR + NBL	1746	1.00	0.37	646	46	692	
EBLR + WBL	21	1.10	1.00	22	244	266	*
WBR + EBL	24	1.00	1.00	24	12	36	
					Critical Volume	1071	OK
					V/C	0.69	

Maryland State Highway Administration
Turning Movement Summary and
Level of Service

Count Date:
Conditions: Existing Saturday
Design Year:

Location: Old Georgetown Rd @ Poindexter Ln

Computed By: JB Date: 4/3/14

Montgomery County Method

Morning Peak Hour 7:00-8:00 am

Lane Configuration

Evening Peak Hour 5:00-6:00 pm

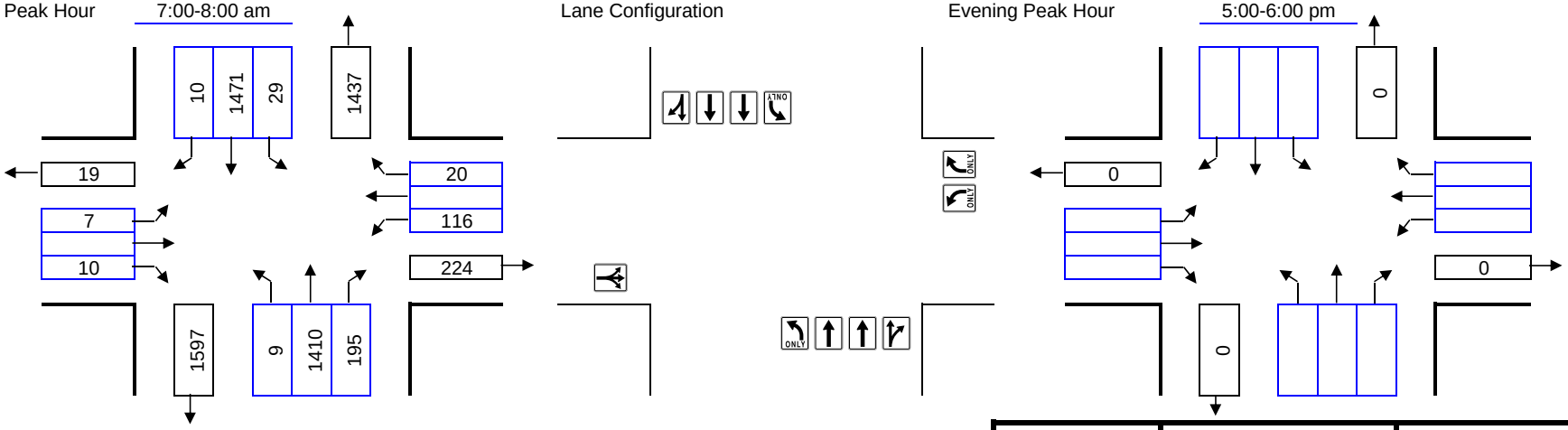

Right Turns Subtracted for Exclusive Right Turn Overlap Phasing or Right Turn on Red:

	AM	PM
NB Approach:	NB	NB
SB Approach:	SB	SB
EB Approach:	EB	EB
WB Approach:	WB	WB

Number of Lanes	Lane Use Factor		Opposing Volume (vph)		PCE
1 =	1.00	Congestion Standard	≤	199	1.1
2 =	0.53	= 1550	≤	599	2.0
3 =	0.37	for	≤	799	3.0
4 =	0.30	North Bethesda	≤	999	4.0
Dbl-left	0.60	Policy	≥	1000	5.0
		Area			

Movement	Volume	PCE	Lane Use Factor	Lane Volume	Opposing Lefts	Critical Lane Volume	*
NBTR + SBL	1605	1.00	0.37	594	29	623	*
SBTR + NBL	1481	1.00	0.37	548	9	557	
EBLTR + WBL	17	1.10	1.00	18	116	134	*
WBR + EBL	20	1.00	1.00	20	7	27	
					Critical Volume	757	OK
					V/C	0.49	

Movement	Volume	PCE	Lane Use Factor	Lane Volume	Opposing Lefts	Critical Lane Volume	*
					Critical Volume	0	OK
					V/C	0.00	

Maryland State Highway Administration
Turning Movement Summary and
Level of Service

Count Date:
Conditions: Existing
Design Year:

Location: Old Georgetown Rd @ Tuckerman Ln

Computed By: JB Date: 1/25/13

Montgomery County Method

Morning Peak Hour 7:00-8:00 am Lane Configuration Evening Peak Hour 5:00-6:00 pm

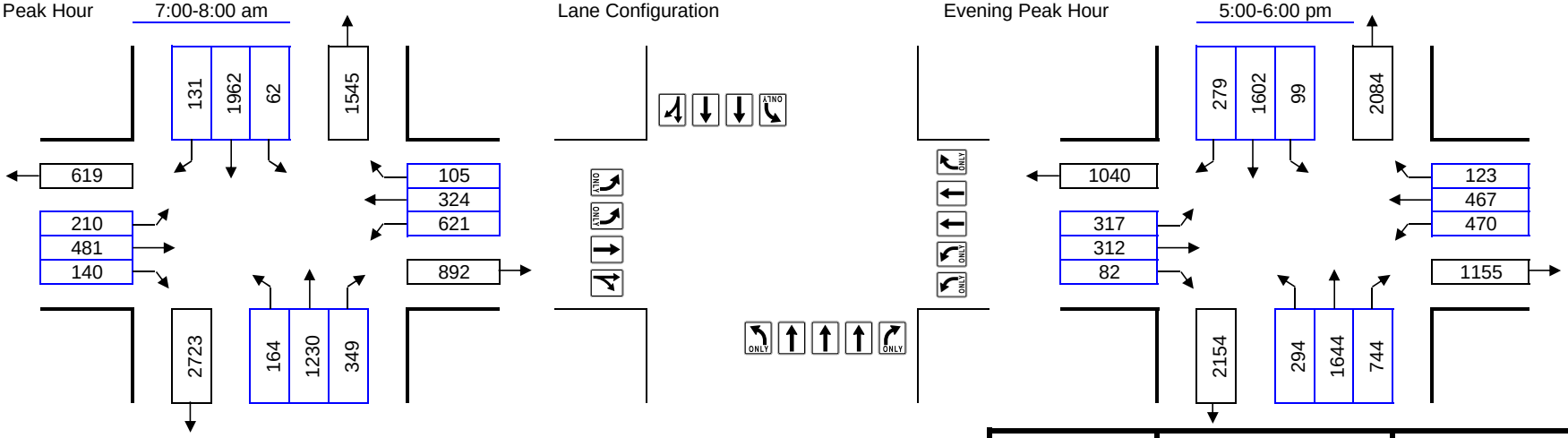

Right Turns Subtracted for Exclusive Right Turn
Overlap Phasing or Right Turn on Red:

	AM	PM
NB Approach:	NB	NB
SB Approach:	SB	SB
EB Approach:	EB	EB
WB Approach:	WB	WB

Number of Lanes	Lane Use Factor
1 =	1.00
2 =	0.53
3 =	0.37
4 =	0.30
Dbl-left	0.60

Congestion Standard = 1550 for North Bethesda Policy Area

Opposing Volume (vph)		PCE
≤	199	1.1
≤	599	2.0
≤	799	3.0
≤	999	4.0
≥	1000	5.0

Movement	Volume	PCE	Lane Use Factor	Lane Volume	Opposing Lefts	Critical Lane Volume	*
NBT + SBL	1230	1.00	0.37	455	62	517	
SBTR + NBL	2093	1.00	0.37	774	164	938	*
EBTR + WBL	621	1.00	0.53	329	373	702	*
WBT + EBL	324	1.00	0.53	172	126	298	
					Critical Volume	1640	F
					V/C	1.06	

Movement	Volume	PCE	Lane Use Factor	Lane Volume	Opposing Lefts	Critical Lane Volume	*
NBR + SBL	744	1.00	1.00	744	99	843	
SBTR + NBL	1881	1.00	0.37	696	294	990	*
EBTR + WBL	394	1.00	0.53	209	282	491	*
WBT + EBL	467	1.00	0.53	248	190	438	
					Critical Volume	1481	OK
					V/C	0.96	

Maryland State Highway Administration
Turning Movement Summary and
Level of Service

Count Date:
Conditions: Existing Saturday
Design Year:

Location: Old Georgetown Rd @ Tuckerman Ln

Computed By: JB Date: 1/25/13

Montgomery County Method

Morning Peak Hour 7:00-8:00 am Lane Configuration Evening Peak Hour 5:00-6:00 pm

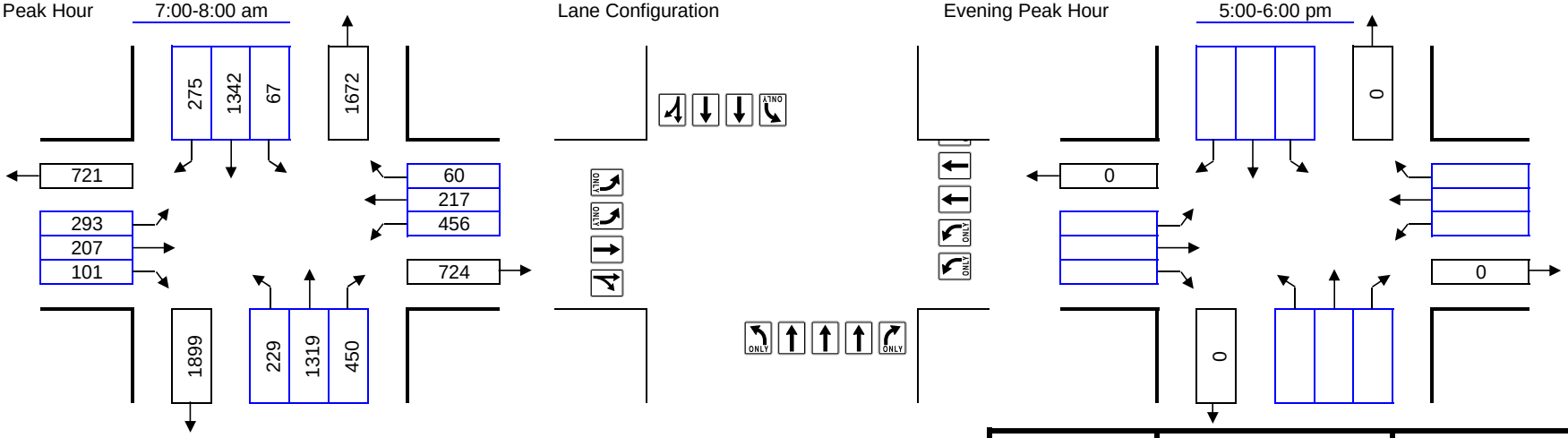

Right Turns Subtracted for Exclusive Right Turn Overlap Phasing or Right Turn on Red:

	AM	PM
NB Approach:	NB	NB
SB Approach:	SB	SB
EB Approach:	EB	EB
WB Approach:	WB	WB

Number of Lanes	Lane Use Factor
1 =	1.00
2 =	0.53
3 =	0.37
4 =	0.30
Dbl-left	0.60

Congestion Standard = 1550 for North Bethesda Policy Area

Opposing Volume (vph)		PCE
≤	199	1.1
≤	599	2.0
≤	799	3.0
≤	999	4.0
≥	1000	5.0

Movement	Volume	PCE	Lane Use Factor	Lane Volume	Opposing Lefts	Critical Lane Volume	*
NBT + SBL	1319	1.00	0.37	488	67	555	
SBTR + NBL	1617	1.00	0.37	598	229	827	*
EBTR + WBL	308	1.00	0.53	163	274	437	*
WBT + EBL	217	1.00	0.53	115	176	291	
					Critical Volume	1264	OK
					V/C	0.82	

Movement	Volume	PCE	Lane Use Factor	Lane Volume	Opposing Lefts	Critical Lane Volume	*
					Critical Volume	0	OK
					V/C	0.00	

Maryland State Highway Administration
Turning Movement Summary and Level of Service

Count Date:
Conditions:
Design Year: Existing

Location: Old Georgetown @ 270 NB Ramp
Computed By: BJM
Date: 4/3/14

Montgomery County Method

Morning Peak Hour 7:15-8:15 am

Lane Configuration

Evening Peak Hour 5:00-6:00 pm

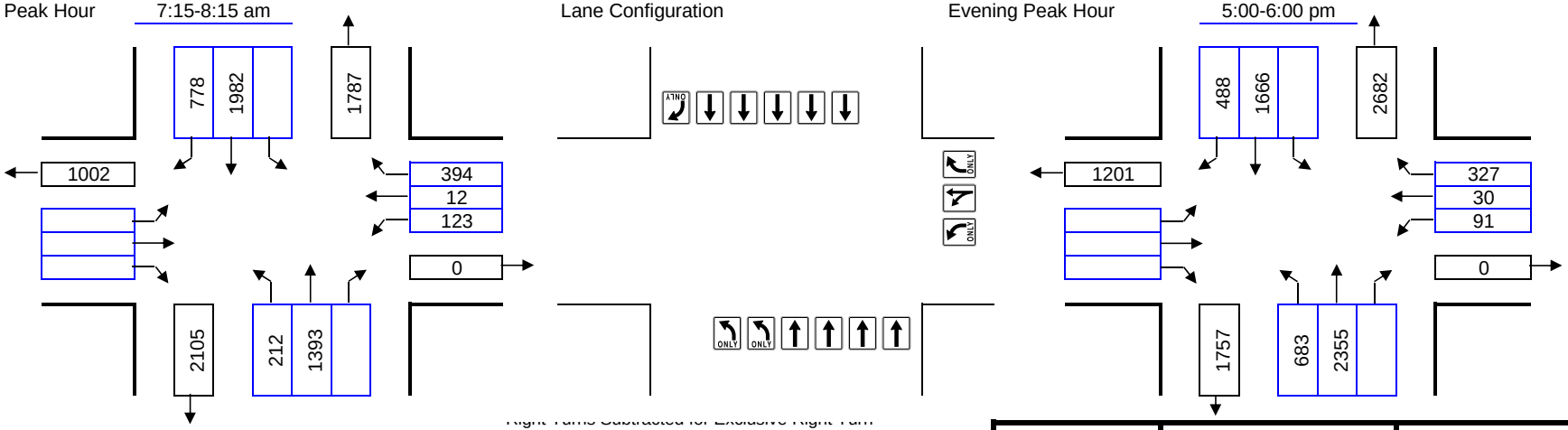

Right Turns Subtracted for Exclusive Right Turn Overlap Phasing or Right Turn on Red and Free Rights:

	AM	PM
NB Approach:	NB	NB
SB Approach:	SB	SB
EB Approach:	EB	EB
WB Approach:	WB	WB

Number of Lanes	Lane Use Factor		Opposing Volume (vph)		PCE
1 =	1.00	Congestion Standard	≤	199	1.1
2 =	0.53	= 1550	≤	599	2.0
3 =	0.37	for	≤	799	3.0
4 =	0.30	North Bethesda	≤	999	4.0
Dbl-left	0.60	Policy Area	≥	1000	5.0

Movement	Volume	PCE	Lane Use Factor	Lane Volume	Opposing Lefts	Critical Lane Volume	*
NBT	1393	1.00	0.30	418	0	418	
SBR + NBL	778	1.00	1.00	778	127	905	*
WBR	394	1.00	1.00	394	0	394	*
					Critical Volume	1299	OK
						V/C	0.84

Movement	Volume	PCE	Lane Use Factor	Lane Volume	Opposing Lefts	Critical Lane Volume	*
NBT	2355	1.00	0.30	707	0	707	
SBR + NBL	488	1.00	1.00	488	410	898	*
WBR	327	1.00	1.00	327	0	327	*
					Critical Volume	1225	OK
						V/C	0.79

Maryland State Highway Administration
Turning Movement Summary and Level of Service

Count Date:
Conditions: SATURDAY
Design Year: Existing

Location: Old Georgetown @ 270 NB Ramp
Computed By: BJM
Date: 4/3/14

Montgomery County Method

Morning Peak Hour 7:15-8:15 am

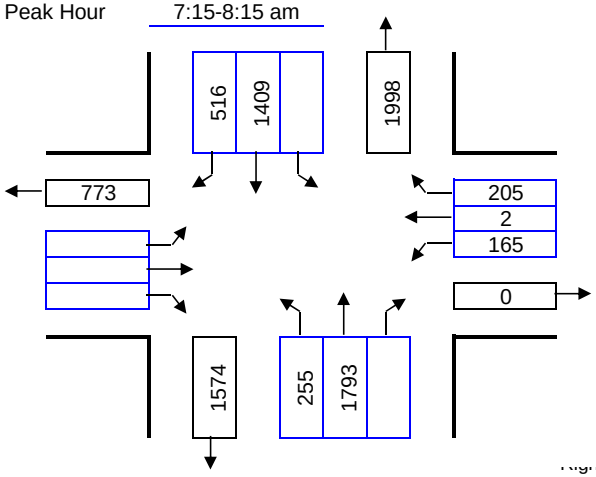

Lane Configuration

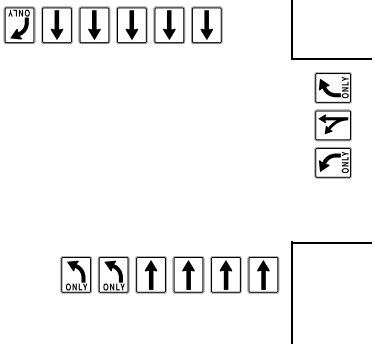

Evening Peak Hour 5:00-6:00 pm

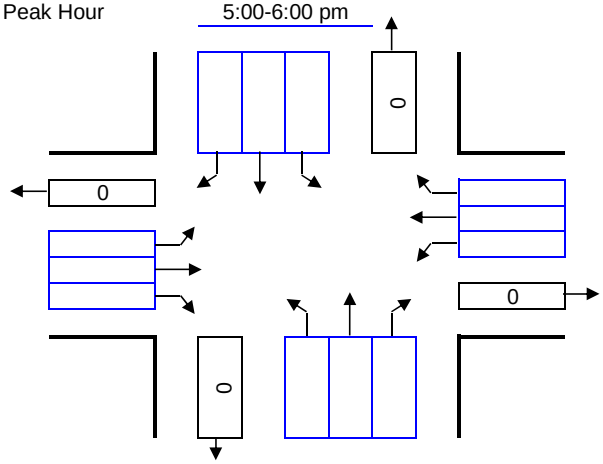

Right Turns Subtracted for Exclusive Right Turn Overlap Phasing or Right Turn on Red and Free Rights:

	AM	PM
NB Approach:	NB	NB
SB Approach:	SB	SB
EB Approach:	EB	EB
WB Approach:	WB	WB

Number of Lanes	Lane Use Factor		Opposing Volume (vph)		PCE
1 =	1.00	Congestion Standard	≤	199	1.1
2 =	0.53	= 1550	≤	599	2.0
3 =	0.37	for	≤	799	3.0
4 =	0.30	North Bethesda	≤	999	4.0
Dbl-left	0.60	Policy	≥	1000	5.0
		Area			

Movement	Volume	PCE	Lane Use Factor	Lane Volume	Opposing Lefts	Critical Lane Volume	*
NBT	1793	1.00	0.30	538	0	538	
SBR + NBL	516	1.00	1.00	516	153	669	*
WBR	205	1.00	1.00	205	0	205	*
					Critical Volume	874	OK
						V/C	0.56

Movement	Volume	PCE	Lane Use Factor	Lane Volume	Opposing Lefts	Critical Lane Volume	*
					Critical Volume	0	OK
						V/C	0.00

Maryland State Highway Administration
Turning Movement Summary and
Level of Service

Count Date:
Conditions:
Design Year: Existing

Location: Old Georgetown @ 270 SB Ramp
Computed By: BJM
Date: 4/3/14

Montgomery County Method

Morning Peak Hour 7:15-8:15 am

Lane Configuration

Evening Peak Hour 5:00-6:00 pm

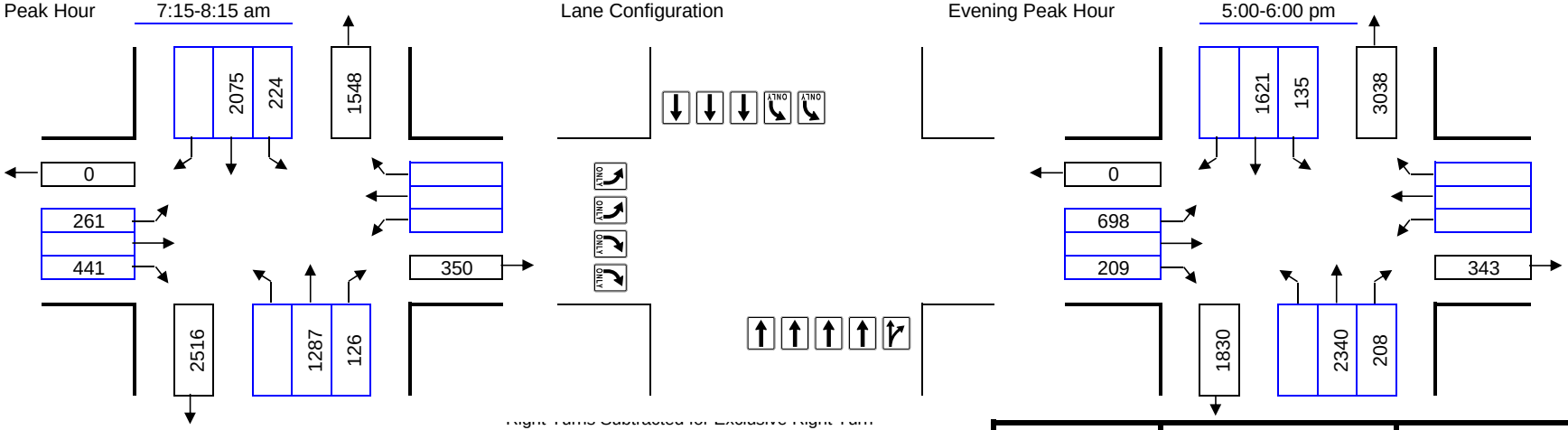

Right Turns Subtracted for Exclusive Right Turn Overlap Phasing or Right Turn on Red and Free Rights:

	AM	PM
NB Approach:	NB	NB
SB Approach:	SB	SB
EB Approach:	EB	EB
WB Approach:	WB	WB

Number of Lanes	Lane Use Factor		Opposing Volume (vph)		PCE
1 =	1.00	Congestion Standard	≤	199	1.1
2 =	0.53	= 1550	≤	599	2.0
3 =	0.37	for	≤	799	3.0
4 =	0.30	North Bethesda	≤	999	4.0
Dbl-left	0.60	Policy	≥	1000	5.0
		Area			

Movement	Volume	PCE	Lane Use Factor	Lane Volume	Opposing Lefts	Critical Lane Volume	*
NBTR + SBL	1413	1.00	0.25	353	134	487	
SBT	2075	1.00	0.37	768	0	768	*
EBR	441	1.00	0.53	234	0	234	*
					Critical Volume	1002	OK
					V/C	0.65	

Movement	Volume	PCE	Lane Use Factor	Lane Volume	Opposing Lefts	Critical Lane Volume	*
NBTR + SBL	2548	1.00	0.25	637	81	718	*
SBT	1621	1.00	0.37	600	0	600	
EBL	698	1.00	0.60	419	0	419	*
					Critical Volume	1137	OK
					V/C	0.73	

Maryland State Highway Administration
Turning Movement Summary and
Level of Service

Count Date:
Conditions: \SATURDAY
Design Year: Existing

Location: Old Georgetown @ 270 SB Ramp
Computed By: BJM
Date: 1/25/13

Montgomery County Method

Morning Peak Hour 7:15-8:15 am

Lane Configuration

Evening Peak Hour 5:00-6:00 pm

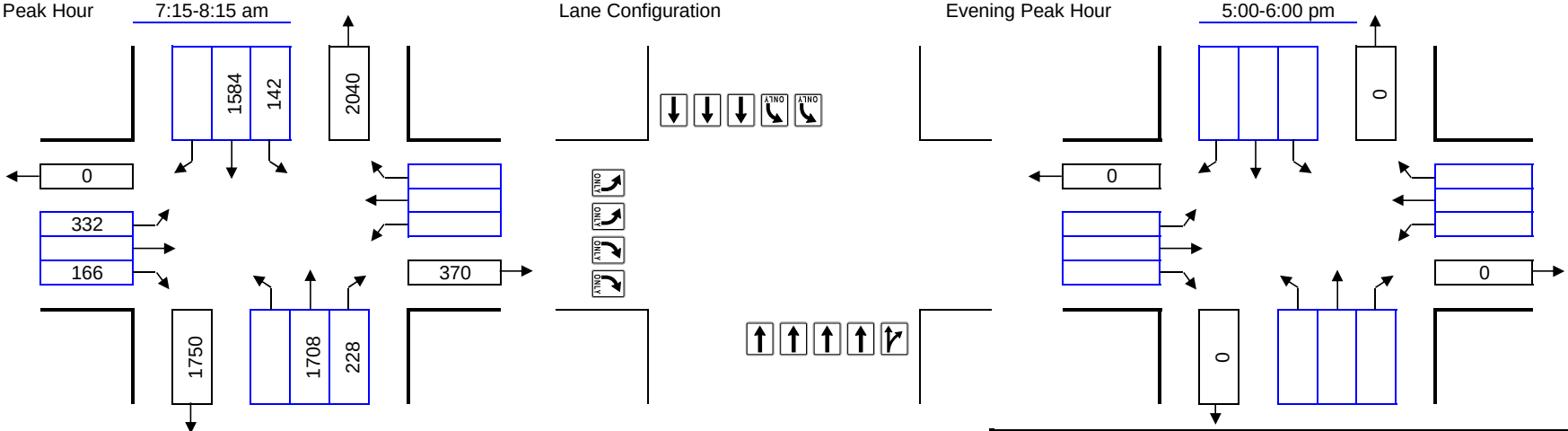

Right Turns Subtracted for Exclusive Right Turn
Overlap Phasing or Right Turn on Red and Free Rights:

	AM	PM
NB Approach:	NB	NB
SB Approach:	SB	SB
EB Approach:	EB	EB
WB Approach:	WB	WB

Number of Lanes	Lane Use Factor
1 =	1.00
2 =	0.53
3 =	0.37
4 =	0.30
Dbl-left	0.60

Congestion Standard = 1550 for North Bethesda Policy Area

Opposing Volume (vph)		PCE
≤	199	1.1
≤	599	2.0
≤	799	3.0
≤	999	4.0
≥	1000	5.0

Movement	Volume	PCE	Lane Use Factor	Lane Volume	Opposing Lefts	Critical Lane Volume	*
NBTR + SBL	1936	1.00	0.25	484	85	569	
SBT	1584	1.00	0.37	586	0	586	*
EBL	332	1.00	0.60	199	0	199	*
					Critical Volume	785	OK
					V/C	0.51	

Movement	Volume	PCE	Lane Use Factor	Lane Volume	Opposing Lefts	Critical Lane Volume	*
					Critical Volume	0	OK
					V/C	0.00	

Maryland State Highway Administration
Turning Movement Summary and
Level of Service

Count Date:
Conditions: Existing
Design Year:

Location: MD 355 @ Mid Pike
Computed By: JB
Date: 1/25/13

Montgomery County Method

Morning Peak Hour 7:15-8:15 am

Lane Configuration

Evening Peak Hour 5:00-6:00 pm

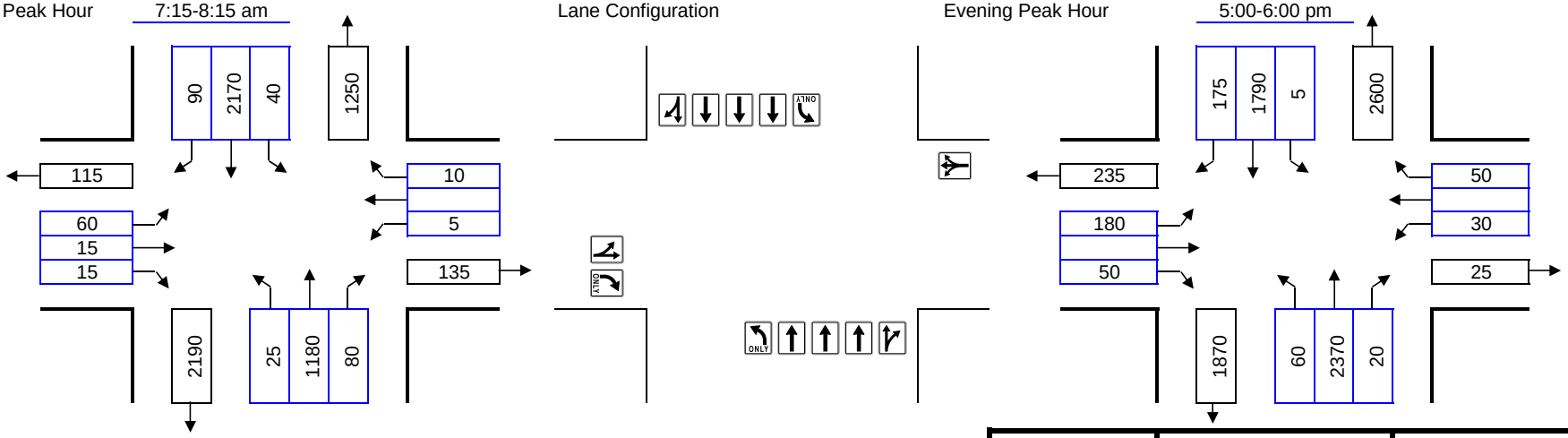

Right Turns Subtracted for Exclusive Right Turn Overlap Phasing or Right Turn on Red:

	AM	PM
NB Approach:	NB	NB
SB Approach:	SB	SB
EB Approach:	EB	EB
WB Approach:	WB	WB

Number of Lanes	Lane Use Factor
1 =	1.00
2 =	0.53
3 =	0.37
4 =	0.30
Dbl-left	0.60

Congestion Standard = 1800 for White Flint Policy Area

Opposing Volume (vph)		PCE
≤	199	1.1
≤	599	2.0
≤	799	3.0
≤	999	4.0
≥	1000	5.0

Movement	Volume	PCE	Lane Use Factor	Lane Volume	Opposing Lefts	Critical Lane Volume	*
NBTR + SBL	1260	1.00	0.30	378	40	418	
SBTR + NBL	2260	1.00	0.30	678	25	703	*
EBLT + WBL	75	1.00	1.00	75	5	80	*
WBLTR + EBL	15	1.00	1.00	15	60	75	
					Critical Volume	783	OK
					V/C	0.44	

Movement	Volume	PCE	Lane Use Factor	Lane Volume	Opposing Lefts	Critical Lane Volume	*
NBTR + SBL	2390	1.00	0.30	717	5	722	*
SBTR + NBL	1965	1.00	0.30	590	60	650	
EBLT + WBL	180	1.00	1.00	180	30	210	
WBLTR + EBL	80	1.00	1.00	80	180	260	*
					Critical Volume	982	OK
					V/C	0.55	

Maryland State Highway Administration
Turning Movement Summary and
Level of Service

Count Date:
Conditions: Existing Saturday
Design Year:

Location: MD 355 @ Mid Pike
Computed By: JB
Date: 1/25/13

Montgomery County Method

Morning Peak Hour 7:15-8:15 am

Lane Configuration

Evening Peak Hour 5:00-6:00 pm

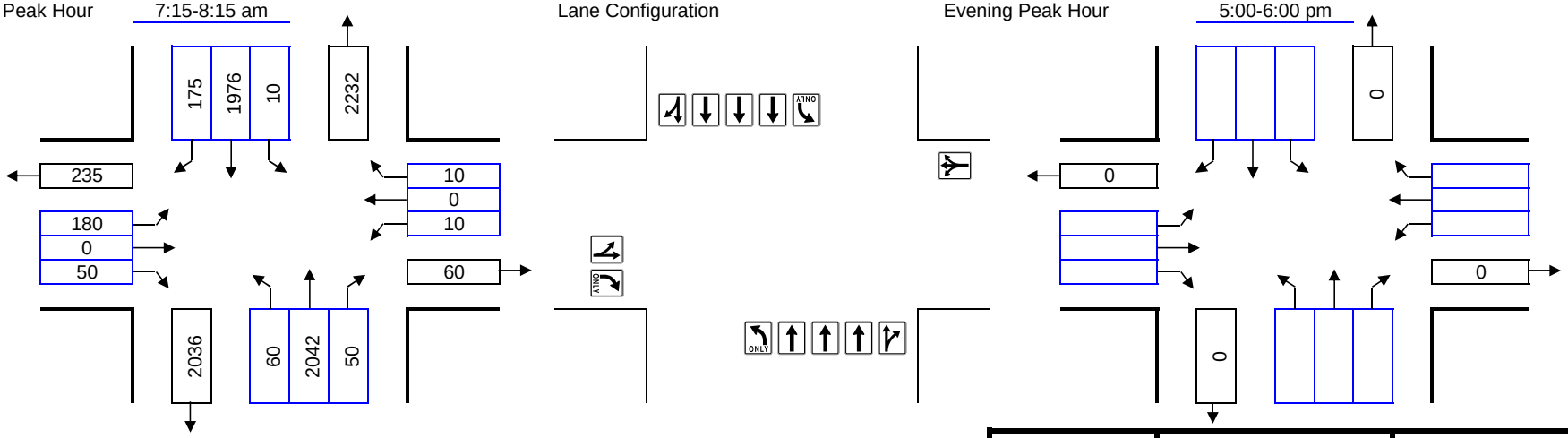

Right Turns Subtracted for Exclusive Right Turn Overlap Phasing or Right Turn on Red:

	AM	PM
NB Approach:	NB	NB
SB Approach:	SB	SB
EB Approach:	EB	EB
WB Approach:	WB	WB

Number of Lanes	Lane Use Factor		Opposing Volume (vph)		PCE
1 =	1.00	Congestion Standard	≤	199	1.1
2 =	0.53	= 1800	≤	599	2.0
3 =	0.37	for	≤	799	3.0
4 =	0.30	White Flint	≤	999	4.0
Dbl-left	0.60	Policy	≥	1000	5.0
		Area			

Movement	Volume	PCE	Lane Use Factor	Lane Volume	Opposing Lefts	Critical Lane Volume	*
NBTR + SBL	2092	1.00	0.30	628	10	638	
SBTR + NBL	2151	1.00	0.30	645	60	705	*
EBLT + WBL	180	1.00	1.00	180	10	190	
WBLTR + EBL	20	1.00	1.00	20	180	200	*
					Critical Volume	905	OK
					V/C	0.50	

Movement	Volume	PCE	Lane Use Factor	Lane Volume	Opposing Lefts	Critical Lane Volume	*
					Critical Volume	0	OK
					V/C	0.00	

HCM Signalized Intersection Capacity Analysis
1: Rollins Ave & MD 355

4/4/2014

Movement	EBL	EBT	EBR	WBL	WBT	WBR	NBL	NBT	NBR	SBL	SBT	SBR
Lane Configurations												
Volume (vph)	0	273	64	0	369	89	51	847	117	169	1853	41
Ideal Flow (vphpl)	1900	1900	1900	1900	1900	1900	1900	1900	1900	1900	1900	1900
Total Lost time (s)		6.0			6.0		6.0	6.0	6.0	6.0	6.0	
Lane Util. Factor		0.95			0.95		1.00	0.91	1.00	1.00	0.91	
Frt		0.97			0.97		1.00	1.00	0.85	1.00	1.00	
Flt Protected		1.00			1.00		0.95	1.00	1.00	0.95	1.00	
Satd. Flow (prot)		3438			3436		1770	5085	1583	1770	5069	
Flt Permitted		1.00			1.00		0.07	1.00	1.00	0.28	1.00	
Satd. Flow (perm)		3438			3436		125	5085	1583	530	5069	
Peak-hour factor, PHF	0.96	0.96	0.96	0.96	0.96	0.96	0.96	0.96	0.96	0.96	0.96	0.96
Adj. Flow (vph)	0	284	67	0	384	93	53	882	122	176	1930	43
RTOR Reduction (vph)	0	0	0	0	0	0	0	0	51	0	1	0
Lane Group Flow (vph)	0	351	0	0	477	0	53	882	71	176	1972	0
Turn Type							pm+pt		Perm	pm+pt		
Protected Phases		4			8		5	2		1	6	
Permitted Phases							2		2	6		
Actuated Green, G (s)		26.4			26.4		92.6	87.3	87.3	111.6	100.3	
Effective Green, g (s)		26.4			26.4		92.6	87.3	87.3	111.6	100.3	
Actuated g/C Ratio		0.18			0.18		0.62	0.58	0.58	0.74	0.67	
Clearance Time (s)		6.0			6.0		6.0	6.0	6.0	6.0	6.0	
Vehicle Extension (s)		3.0			3.0		3.0	3.0	3.0	3.0	3.0	
Lane Grp Cap (vph)		605			605		135	2959	921	546	3389	
v/s Ratio Prot		0.10			c0.14		0.01	0.17		c0.04	c0.39	
v/s Ratio Perm							0.23		0.04	0.20		
v/c Ratio		0.58			0.79		0.39	0.30	0.08	0.32	0.58	
Uniform Delay, d1		56.7			59.1		33.8	15.9	13.7	10.2	13.5	
Progression Factor		1.00			1.00		1.16	0.05	0.02	1.00	1.00	
Incremental Delay, d2		1.4			6.8		1.8	0.2	0.2	0.3	0.7	
Delay (s)		58.1			65.9		40.9	1.0	0.4	10.5	14.2	
Level of Service		E			E		D	A	A	B	B	
Approach Delay (s)		58.1			65.9			2.9			13.9	
Approach LOS		E			E			A			B	

Intersection Summary			
HCM Average Control Delay	21.0	HCM Level of Service	C
HCM Volume to Capacity ratio	0.59		
Actuated Cycle Length (s)	150.0	Sum of lost time (s)	12.0
Intersection Capacity Utilization	68.1%	ICU Level of Service	C
Analysis Period (min)	15		
c Critical Lane Group			

Movement	EBL	EBT	EBR	WBL	WBT	WBR	NBL	NBT	NBR	SBL	SBT	SBR
Lane Configurations												
Volume (vph)	5	15	40	590	10	25	15	1025	230	60	1760	90
Ideal Flow (vphpl)	1900	1900	1900	1900	1900	1900	1900	1900	1900	1900	1900	1900
Total Lost time (s)		6.0	6.0	6.0	6.0		6.0	6.0	6.0	6.0	6.0	
Lane Util. Factor		1.00	1.00	0.97	1.00		1.00	0.91	1.00	1.00	0.91	
Frt		1.00	0.85	1.00	0.89		1.00	1.00	0.85	1.00	0.99	
Flt Protected		0.99	1.00	0.95	1.00		0.95	1.00	1.00	0.95	1.00	
Satd. Flow (prot)		1841	1583	3433	1666		1770	5085	1583	1770	5048	
Flt Permitted		0.99	1.00	0.95	1.00		0.95	1.00	1.00	0.25	1.00	
Satd. Flow (perm)		1841	1583	3433	1666		1770	5085	1583	471	5048	
Peak-hour factor, PHF	0.95	0.95	0.95	0.95	0.95	0.95	0.95	0.95	0.95	0.95	0.95	0.95
Adj. Flow (vph)	5	16	42	621	11	26	16	1079	242	63	1853	95
RTOR Reduction (vph)	0	0	40	0	20	0	0	0	114	0	4	0
Lane Group Flow (vph)	0	21	2	621	17	0	16	1079	128	63	1944	0
Turn Type	Split		Perm	Split			Prot		Perm	pm+pt		
Protected Phases	4	4		8	8		5	2		1	6	
Permitted Phases			4						2	6		
Actuated Green, G (s)		5.4	5.4	32.2	32.2		16.4	79.6	79.6	72.0	72.0	
Effective Green, g (s)		5.4	5.4	32.2	32.2		16.4	79.6	79.6	72.0	72.0	
Actuated g/C Ratio		0.04	0.04	0.21	0.21		0.11	0.53	0.53	0.48	0.48	
Clearance Time (s)		6.0	6.0	6.0	6.0		6.0	6.0	6.0	6.0	6.0	
Vehicle Extension (s)		3.0	3.0	3.0	3.0		3.0	3.0	3.0	3.0	3.0	
Lane Grp Cap (vph)		66	57	737	358		194	2698	840	302	2423	
v/s Ratio Prot		c0.01		c0.18	0.01		0.01	c0.21		0.01	c0.39	
v/s Ratio Perm			0.00						0.08	0.09		
v/c Ratio		0.32	0.03	0.84	0.05		0.08	0.40	0.15	0.21	0.80	
Uniform Delay, d1		70.5	69.8	56.5	46.7		60.0	21.0	18.0	23.4	33.0	
Progression Factor		1.00	1.00	1.00	1.00		0.81	0.88	3.64	0.67	0.62	
Incremental Delay, d2		2.8	0.2	8.7	0.1		0.8	0.4	0.4	1.3	2.4	
Delay (s)		73.3	70.0	65.1	46.8		49.3	18.9	65.8	16.9	22.7	
Level of Service		E	E	E	D		D	B	E	B	C	
Approach Delay (s)		71.1			64.1			27.8			22.6	
Approach LOS		E			E			C			C	

Intersection Summary			
HCM Average Control Delay	31.7	HCM Level of Service	C
HCM Volume to Capacity ratio	0.75		
Actuated Cycle Length (s)	150.0	Sum of lost time (s)	24.0
Intersection Capacity Utilization	77.8%	ICU Level of Service	D
Analysis Period (min)	15		
c Critical Lane Group			

Movement	EBL	EBT	EBR	WBL	WBT	WBR	NBL	NBT	NBR	SBL	SBT	SBR
Lane Configurations												
Volume (vph)	20	0	25	55	20	35	30	1215	75	20	2290	50
Ideal Flow (vphpl)	1900	1900	1900	1900	1900	1900	1900	1900	1900	1900	1900	1900
Total Lost time (s)	6.0	6.0		6.0	6.0		6.0	6.0	6.0	6.0	6.0	
Lane Util. Factor	1.00	1.00		1.00	1.00		1.00	0.91	1.00	1.00	0.91	
Frt	1.00	0.85		1.00	0.90		1.00	1.00	0.85	1.00	1.00	
Flt Protected	0.95	1.00		0.95	1.00		0.95	1.00	1.00	0.95	1.00	
Satd. Flow (prot)	1770	1583		1770	1684		1770	5085	1583	1770	5069	
Flt Permitted	0.72	1.00		0.74	1.00		0.95	1.00	1.00	0.95	1.00	
Satd. Flow (perm)	1340	1583		1379	1684		1770	5085	1583	1770	5069	
Peak-hour factor, PHF	0.95	0.95	0.95	0.95	0.95	0.95	0.95	0.95	0.95	0.95	0.95	0.95
Adj. Flow (vph)	21	0	26	58	21	37	32	1279	79	21	2411	53
RTOR Reduction (vph)	0	24	0	0	34	0	0	0	18	0	1	0
Lane Group Flow (vph)	21	2	0	58	24	0	32	1279	61	21	2463	0
Turn Type	Perm			Perm			Prot		Perm	Prot		
Protected Phases		4			8		5	2		1	6	
Permitted Phases	4			8					2			
Actuated Green, G (s)	11.7	11.7		11.7	11.7		5.7	115.3	115.3	5.0	114.6	
Effective Green, g (s)	11.7	11.7		11.7	11.7		5.7	115.3	115.3	5.0	114.6	
Actuated g/C Ratio	0.08	0.08		0.08	0.08		0.04	0.77	0.77	0.03	0.76	
Clearance Time (s)	6.0	6.0		6.0	6.0		6.0	6.0	6.0	6.0	6.0	
Vehicle Extension (s)	3.0	3.0		3.0	3.0		3.0	3.0	3.0	3.0	3.0	
Lane Grp Cap (vph)	105	123		108	131		67	3909	1217	59	3873	
v/s Ratio Prot		0.00			0.01		c0.02	0.25		0.01	c0.49	
v/s Ratio Perm	0.02			c0.04					0.04			
v/c Ratio	0.20	0.02		0.54	0.18		0.48	0.33	0.05	0.36	0.64	
Uniform Delay, d1	64.8	63.8		66.5	64.7		70.7	5.4	4.2	70.9	8.1	
Progression Factor	1.00	1.00		1.00	1.00		1.21	0.31	0.02	1.13	1.30	
Incremental Delay, d2	0.9	0.1		5.1	0.7		5.2	0.2	0.1	2.2	0.5	
Delay (s)	65.7	63.9		71.6	65.3		90.4	1.9	0.1	82.3	11.1	
Level of Service	E	E		E	E		F	A	A	F	B	
Approach Delay (s)		64.7			68.5			3.8			11.7	
Approach LOS		E			E			A			B	

Intersection Summary			
HCM Average Control Delay	11.2	HCM Level of Service	B
HCM Volume to Capacity ratio	0.62		
Actuated Cycle Length (s)	150.0	Sum of lost time (s)	18.0
Intersection Capacity Utilization	65.1%	ICU Level of Service	C
Analysis Period (min)	15		
c Critical Lane Group			

Intersection Sign configuration not allowed in HCM analysis.

Movement	EBL	EBT	EBR	WBL	WBT	WBR	NBL	NBT	NBR	SBL	SBT	SBR
Lane Configurations												
Volume (vph)	100	525	0	0	1100	150	80	0	100	0	0	0
Ideal Flow (vphpl)	1900	1900	1900	1900	1900	1900	1900	1900	1900	1900	1900	1900
Lane Width	11	11	11	11	11	11	11	11	11	11	11	11
Total Lost time (s)	6.0	6.0			6.0	6.0		6.0	6.0			
Lane Util. Factor	0.97	0.95			0.95	1.00		1.00	0.88			
Frt	1.00	1.00			1.00	0.85		1.00	0.85			
Flt Protected	0.95	1.00			1.00	1.00		0.95	1.00			
Satd. Flow (prot)	3319	3421			3421	1531		1711	2694			
Flt Permitted	0.95	1.00			1.00	1.00		0.95	1.00			
Satd. Flow (perm)	3319	3421			3421	1531		1711	2694			
Peak-hour factor, PHF	0.92	0.92	0.92	0.92	0.92	0.92	0.92	0.92	0.92	0.92	0.92	0.92
Adj. Flow (vph)	109	571	0	0	1196	163	87	0	109	0	0	0
RTOR Reduction (vph)	0	0	0	0	0	83	0	0	100	0	0	0
Lane Group Flow (vph)	109	571	0	0	1196	80	0	87	9	0	0	0
Turn Type	Prot					Perm	Split		Prot			
Protected Phases	1	6			2		4	4	4			
Permitted Phases						2						
Actuated Green, G (s)	45.2	125.0			73.8	73.8		13.0	13.0			
Effective Green, g (s)	45.2	125.0			73.8	73.8		13.0	13.0			
Actuated g/C Ratio	0.30	0.83			0.49	0.49		0.09	0.09			
Clearance Time (s)	6.0	6.0			6.0	6.0		6.0	6.0			
Vehicle Extension (s)	3.0	3.0			3.0	3.0		3.0	3.0			
Lane Grp Cap (vph)	1000	2851			1683	753		148	233			
v/s Ratio Prot	0.03	c0.17			c0.35			c0.05	0.00			
v/s Ratio Perm						0.05						
v/c Ratio	0.11	0.20			0.71	0.11		0.59	0.04			
Uniform Delay, d1	37.9	2.5			29.8	20.4		65.9	62.8			
Progression Factor	1.61	1.96			1.57	7.45		1.18	3.02			
Incremental Delay, d2	0.0	0.2			2.1	0.2		5.7	0.1			
Delay (s)	60.8	5.0			48.9	152.4		83.2	189.6			
Level of Service	E	A			D	F		F	F			
Approach Delay (s)		14.0			61.4			142.4			0.0	
Approach LOS		B			E			F			A	

Intersection Summary			
HCM Average Control Delay	54.0	HCM Level of Service	D
HCM Volume to Capacity ratio	0.50		
Actuated Cycle Length (s)	150.0	Sum of lost time (s)	12.0
Intersection Capacity Utilization	53.2%	ICU Level of Service	A
Analysis Period (min)	15		

c Critical Lane Group

Movement	EBL	EBT	EBR	WBL	WBT	WBR	NBL	NBT	NBR	SBL	SBT	SBR
Lane Configurations												
Volume (vph)	430	75	95	55	265	35	160	820	60	85	1580	525
Ideal Flow (vphpl)	1900	1900	1900	1900	1900	1900	1900	1900	1900	1900	1900	1900
Total Lost time (s)	6.0	6.0	6.0	6.0	6.0	6.0	6.0	6.0		6.0	6.0	6.0
Lane Util. Factor	0.91	0.91	1.00	1.00	1.00	1.00	1.00	0.91		1.00	0.91	1.00
Frt	1.00	1.00	0.85	1.00	1.00	0.85	1.00	0.99		1.00	1.00	0.85
Flt Protected	0.95	0.97	1.00	0.95	1.00	1.00	0.95	1.00		0.95	1.00	1.00
Satd. Flow (prot)	3221	1649	1583	1770	1863	1583	1770	5033		1770	5085	1583
Flt Permitted	0.95	0.97	1.00	0.95	1.00	1.00	0.95	1.00		0.19	1.00	1.00
Satd. Flow (perm)	3221	1649	1583	1770	1863	1583	1770	5033		356	5085	1583
Peak-hour factor, PHF	0.95	0.95	0.95	0.95	0.95	0.95	0.95	0.95	0.95	0.95	0.95	0.95
Adj. Flow (vph)	453	79	100	58	279	37	168	863	63	89	1663	553
RTOR Reduction (vph)	0	0	86	0	0	22	0	5	0	0	0	228
Lane Group Flow (vph)	353	179	14	58	279	15	168	921	0	89	1663	325
Turn Type	Split		Perm	Split		Perm	Prot			pm+pt		Perm
Protected Phases	4	4		8	8		5	2		1	6	
Permitted Phases			4			8				6		6
Actuated Green, G (s)	21.6	21.6	21.6	25.5	25.5	25.5	18.0	70.2		60.9	60.9	60.9
Effective Green, g (s)	21.6	21.6	21.6	25.5	25.5	25.5	18.0	70.2		60.9	60.9	60.9
Actuated g/C Ratio	0.14	0.14	0.14	0.17	0.17	0.17	0.12	0.47		0.41	0.41	0.41
Clearance Time (s)	6.0	6.0	6.0	6.0	6.0	6.0	6.0	6.0		6.0	6.0	6.0
Vehicle Extension (s)	3.0	3.0	3.0	3.0	3.0	3.0	3.0	3.0		3.0	3.0	3.0
Lane Grp Cap (vph)	464	237	228	301	317	269	212	2355		227	2065	643
v/s Ratio Prot	c0.11	0.11		0.03	c0.15		c0.09	0.18		0.02	c0.33	
v/s Ratio Perm			0.01			0.01				0.14		0.21
v/c Ratio	0.76	0.76	0.06	0.19	0.88	0.05	0.79	0.39		0.39	0.81	0.51
Uniform Delay, d1	61.7	61.7	55.5	53.4	60.8	52.1	64.2	26.0		29.2	39.3	33.3
Progression Factor	0.53	0.54	1.07	1.21	1.18	1.44	1.35	1.73		0.71	0.78	1.08
Incremental Delay, d2	7.2	12.7	0.1	0.3	23.3	0.1	17.7	0.5		1.0	3.1	2.5
Delay (s)	39.6	46.1	59.7	64.8	94.8	75.3	104.2	45.5		21.8	34.0	38.3
Level of Service	D	D	E	E	F	E	F	D		C	C	D
Approach Delay (s)		44.6			88.2			54.5			34.5	
Approach LOS		D			F			D			C	

Intersection Summary			
HCM Average Control Delay	45.5	HCM Level of Service	D
HCM Volume to Capacity ratio	0.81		
Actuated Cycle Length (s)	150.0	Sum of lost time (s)	24.0
Intersection Capacity Utilization	82.6%	ICU Level of Service	E
Analysis Period (min)	15		
c Critical Lane Group			

Movement	EBL	EBT	EBR	WBL	WBT	WBR	NBL	NBT	NBR	SBL	SBT	SBR
Lane Configurations												
Volume (vph)	75	220	65	65	70	40	140	925	125	85	1565	80
Ideal Flow (vphpl)	1900	1900	1900	1900	1900	1900	1900	1900	1900	1900	1900	1900
Total Lost time (s)	6.0	6.0		6.0	6.0	6.0	6.0	6.0	6.0	6.0	6.0	6.0
Lane Util. Factor	1.00	0.95		1.00	0.95	1.00	1.00	0.91	1.00	1.00	0.91	1.00
Frt	1.00	0.97		1.00	1.00	0.85	1.00	1.00	0.85	1.00	1.00	0.85
Flt Protected	0.95	1.00		0.95	1.00	1.00	0.95	1.00	1.00	0.95	1.00	1.00
Satd. Flow (prot)	1770	3419		1770	3539	1583	1770	5085	1583	1770	5085	1583
Flt Permitted	0.71	1.00		0.39	1.00	1.00	0.12	1.00	1.00	0.27	1.00	1.00
Satd. Flow (perm)	1316	3419		734	3539	1583	233	5085	1583	503	5085	1583
Peak-hour factor, PHF	0.95	0.95	0.95	0.95	0.95	0.95	0.95	0.95	0.95	0.95	0.95	0.95
Adj. Flow (vph)	79	232	68	68	74	42	147	974	132	89	1647	84
RTOR Reduction (vph)	0	20	0	0	0	36	0	0	38	0	0	18
Lane Group Flow (vph)	79	280	0	68	74	6	147	974	94	89	1647	66
Turn Type	Perm			Perm		Perm	Perm		Perm	pm+pt		Perm
Protected Phases		4			8			2		1	6	
Permitted Phases	4			8		8	2		2	6		6
Actuated Green, G (s)	20.9	20.9		20.9	20.9	20.9	106.8	106.8	106.8	117.1	117.1	117.1
Effective Green, g (s)	20.9	20.9		20.9	20.9	20.9	106.8	106.8	106.8	117.1	117.1	117.1
Actuated g/C Ratio	0.14	0.14		0.14	0.14	0.14	0.71	0.71	0.71	0.78	0.78	0.78
Clearance Time (s)	6.0	6.0		6.0	6.0	6.0	6.0	6.0	6.0	6.0	6.0	6.0
Vehicle Extension (s)	3.0	3.0		3.0	3.0	3.0	3.0	3.0	3.0	3.0	3.0	3.0
Lane Grp Cap (vph)	183	476		102	493	221	166	3621	1127	429	3970	1236
v/s Ratio Prot		0.08			0.02			0.19		0.01	c0.32	
v/s Ratio Perm	0.06			c0.09		0.00	c0.63		0.06	0.16		0.04
v/c Ratio	0.43	0.59		0.67	0.15	0.03	0.89	0.27	0.08	0.21	0.41	0.05
Uniform Delay, d1	59.1	60.5		61.2	56.7	55.8	16.8	7.7	6.6	5.7	5.3	3.8
Progression Factor	0.61	0.58		1.01	1.01	1.06	2.00	0.63	1.17	0.21	0.28	0.02
Incremental Delay, d2	1.6	1.8		15.2	0.1	0.0	40.8	0.2	0.1	0.2	0.2	0.1
Delay (s)	37.6	37.2		77.1	57.6	59.0	74.5	5.0	7.8	1.3	1.7	0.1
Level of Service	D	D		E	E	E	E	A	A	A	A	A
Approach Delay (s)		37.3			65.1			13.5			1.6	
Approach LOS		D			E			B			A	

Intersection Summary			
HCM Average Control Delay	12.6	HCM Level of Service	B
HCM Volume to Capacity ratio	0.81		
Actuated Cycle Length (s)	150.0	Sum of lost time (s)	12.0
Intersection Capacity Utilization	69.8%	ICU Level of Service	C
Analysis Period (min)	15		
c Critical Lane Group			

Movement	EBL	EBT	EBR	WBL	WBT	WBR	NBL	NBT	NBR	SBL	SBT	SBR
Lane Configurations												
Volume (vph)	80	265	75	510	600	75	75	1035	290	130	1475	90
Ideal Flow (vphpl)	1900	1900	1900	1900	1900	1900	1900	1900	1900	1900	1900	1900
Total Lost time (s)		6.0	6.0	6.0	6.0	6.0	6.0	6.0	6.0	6.0	6.0	6.0
Lane Util. Factor		0.95	1.00	0.97	0.95	1.00	1.00	0.91	1.00	1.00	0.91	1.00
Frt		1.00	0.85	1.00	1.00	0.85	1.00	1.00	0.85	1.00	1.00	0.85
Flt Protected		0.99	1.00	0.95	1.00	1.00	0.95	1.00	1.00	0.95	1.00	1.00
Satd. Flow (prot)		3499	1583	3433	3539	1583	1770	5085	1583	1770	5085	1583
Flt Permitted		0.99	1.00	0.95	1.00	1.00	0.95	1.00	1.00	0.17	1.00	1.00
Satd. Flow (perm)		3499	1583	3433	3539	1583	1770	5085	1583	322	5085	1583
Peak-hour factor, PHF	0.95	0.95	0.95	0.95	0.95	0.95	0.95	0.95	0.95	0.95	0.95	0.95
Adj. Flow (vph)	84	279	79	537	632	79	79	1089	305	137	1553	95
RTOR Reduction (vph)	0	0	69	0	0	52	0	0	63	0	0	42
Lane Group Flow (vph)	0	363	10	537	632	27	79	1089	242	137	1553	53
Turn Type	Split		Perm	Split		Perm	Prot		pm+ov	pm+pt		Perm
Protected Phases	4	4		8	8		5	2	8	1	6	
Permitted Phases			4			8			2	6		6
Actuated Green, G (s)		19.8	19.8	33.7	33.7	33.7	10.7	61.8	95.5	72.5	61.8	61.8
Effective Green, g (s)		19.8	19.8	33.7	33.7	33.7	10.7	61.8	95.5	72.5	61.8	61.8
Actuated g/C Ratio		0.13	0.13	0.22	0.22	0.22	0.07	0.41	0.64	0.48	0.41	0.41
Clearance Time (s)		6.0	6.0	6.0	6.0	6.0	6.0	6.0	6.0	6.0	6.0	6.0
Vehicle Extension (s)		3.0	3.0	3.0	3.0	3.0	3.0	3.0	3.0	3.0	3.0	3.0
Lane Grp Cap (vph)		462	209	771	795	356	126	2095	1008	259	2095	652
v/s Ratio Prot		c0.10		0.16	c0.18		c0.04	0.21	0.05	0.04	c0.31	
v/s Ratio Perm			0.01			0.02			0.10	0.22		0.03
v/c Ratio		0.79	0.05	0.70	0.79	0.08	0.63	0.52	0.24	0.53	0.74	0.08
Uniform Delay, d1		63.0	56.9	53.4	54.9	45.9	67.7	33.0	11.7	23.4	37.3	26.8
Progression Factor		0.76	2.08	0.74	0.75	0.36	1.45	0.35	0.42	0.55	0.69	0.50
Incremental Delay, d2		8.4	0.1	2.2	4.4	0.1	9.2	0.9	0.1	1.8	2.2	0.2
Delay (s)		56.4	118.5	41.9	45.5	16.6	107.6	12.3	5.1	14.8	28.0	13.6
Level of Service		E	F	D	D	B	F	B	A	B	C	B
Approach Delay (s)		67.5			42.1			15.9			26.3	
Approach LOS		E			D			B			C	

Intersection Summary			
HCM Average Control Delay	30.9	HCM Level of Service	C
HCM Volume to Capacity ratio	0.75		
Actuated Cycle Length (s)	150.0	Sum of lost time (s)	24.0
Intersection Capacity Utilization	78.9%	ICU Level of Service	D
Analysis Period (min)	15		
c Critical Lane Group			

Movement	EBL	EBT	EBR	WBL	WBT	WBR	NBL	NBT	NBR	SBL	SBT	SBR
Lane Configurations												
Volume (vph)	10	5	20	0	0	0	145	1390	25	30	1930	100
Ideal Flow (vphpl)	1900	1900	1900	1900	1900	1900	1900	1900	1900	1900	1900	1900
Total Lost time (s)		6.0	6.0				6.0	6.0		6.0	6.0	6.0
Lane Util. Factor		1.00	1.00				1.00	0.86		1.00	0.91	1.00
Frt		1.00	0.85				1.00	1.00		1.00	1.00	0.85
Flt Protected		0.97	1.00				0.95	1.00		0.95	1.00	1.00
Satd. Flow (prot)		1801	1583				1770	6391		1770	5085	1583
Flt Permitted		0.97	1.00				0.08	1.00		0.95	1.00	1.00
Satd. Flow (perm)		1801	1583				142	6391		1770	5085	1583
Peak-hour factor, PHF	0.95	0.95	0.95	0.95	0.95	0.95	0.95	0.95	0.95	0.95	0.95	0.95
Adj. Flow (vph)	11	5	21	0	0	0	153	1463	26	32	2032	105
RTOR Reduction (vph)	0	0	20	0	0	0	0	1	0	0	0	20
Lane Group Flow (vph)	0	16	1	0	0	0	153	1488	0	32	2032	85
Turn Type	Perm		Perm				pm+pt			Prot		Perm
Protected Phases		4					5	2		1	6	
Permitted Phases	4		4				2					6
Actuated Green, G (s)		4.6	4.6				131.3	121.7		5.7	117.8	117.8
Effective Green, g (s)		4.6	4.6				131.3	121.7		5.7	117.8	117.8
Actuated g/C Ratio		0.03	0.03				0.88	0.81		0.04	0.79	0.79
Clearance Time (s)		6.0	6.0				6.0	6.0		6.0	6.0	6.0
Vehicle Extension (s)		3.0	3.0				3.0	3.0		3.0	3.0	3.0
Lane Grp Cap (vph)		55	49				228	5185		67	3993	1243
v/s Ratio Prot							c0.04	c0.23		0.02	0.40	
v/s Ratio Perm		0.01	0.00				c0.54					0.05
v/c Ratio		0.29	0.01				0.67	0.29		0.48	0.51	0.07
Uniform Delay, d1		71.1	70.5				14.0	3.5		70.7	5.8	3.7
Progression Factor		1.00	1.00				2.56	0.16		0.84	0.56	0.60
Incremental Delay, d2		2.9	0.1				7.1	0.1		3.7	0.3	0.1
Delay (s)		74.0	70.6				42.8	0.7		62.8	3.5	2.3
Level of Service		E	E				D	A		E	A	A
Approach Delay (s)		72.1			0.0			4.6			4.4	
Approach LOS		E			A			A			A	

Intersection Summary			
HCM Average Control Delay	5.1	HCM Level of Service	A
HCM Volume to Capacity ratio	0.67		
Actuated Cycle Length (s)	150.0	Sum of lost time (s)	18.0
Intersection Capacity Utilization	63.7%	ICU Level of Service	B
Analysis Period (min)	15		
c Critical Lane Group			

Movement	EBL	EBT	EBR	WBL	WBT	WBR	NBL	NBT	NBR	SBL	SBT	SBR
Lane Configurations												
Volume (vph)	60	0	175	25	0	10	125	1490	65	40	1790	120
Ideal Flow (vphpl)	1900	1900	1900	1900	1900	1900	1900	1900	1900	1900	1900	1900
Total Lost time (s)	6.0		6.0	6.0		6.0	6.0	6.0	6.0	6.0	6.0	
Lane Util. Factor	1.00		1.00	0.97		1.00	1.00	0.91	1.00	1.00	0.91	
Frt	1.00		0.85	1.00		0.85	1.00	1.00	0.85	1.00	0.99	
Flt Protected	0.95		1.00	0.95		1.00	0.95	1.00	1.00	0.95	1.00	
Satd. Flow (prot)	1770		1583	3433		1583	1770	5085	1583	1770	5037	
Flt Permitted	0.95		1.00	0.95		1.00	0.95	1.00	1.00	0.95	1.00	
Satd. Flow (perm)	1770		1583	3433		1583	1770	5085	1583	1770	5037	
Peak-hour factor, PHF	0.95	0.95	0.95	0.95	0.95	0.95	0.95	0.95	0.95	0.95	0.95	0.95
Adj. Flow (vph)	63	0	184	26	0	11	132	1568	68	42	1884	126
RTOR Reduction (vph)	0	0	7	0	0	10	0	0	16	0	3	0
Lane Group Flow (vph)	63	0	177	26	0	1	132	1568	52	42	2007	0
Turn Type	custom		custom	custom		custom	Prot		Perm	Prot		
Protected Phases			5				5	2		1	6	
Permitted Phases	4		4	8		8			2			
Actuated Green, G (s)	9.4		26.4	9.4		9.4	17.0	114.8	114.8	7.8	105.6	
Effective Green, g (s)	9.4		26.4	9.4		9.4	17.0	114.8	114.8	7.8	105.6	
Actuated g/C Ratio	0.06		0.18	0.06		0.06	0.11	0.77	0.77	0.05	0.70	
Clearance Time (s)	6.0		6.0	6.0		6.0	6.0	6.0	6.0	6.0	6.0	
Vehicle Extension (s)	3.0		3.0	3.0		3.0	3.0	3.0	3.0	3.0	3.0	
Lane Grp Cap (vph)	111		342	215		99	201	3892	1212	92	3546	
v/s Ratio Prot			c0.06				c0.07	0.31		0.02	c0.40	
v/s Ratio Perm	0.04		0.05	0.01		0.00			0.03			
v/c Ratio	0.57		0.52	0.12		0.01	0.66	0.40	0.04	0.46	0.57	
Uniform Delay, d1	68.3		56.0	66.4		65.9	63.7	6.0	4.3	69.0	10.9	
Progression Factor	1.00		1.00	1.00		1.00	0.94	2.51	4.73	1.00	0.53	
Incremental Delay, d2	6.5		1.3	0.3		0.0	6.8	0.3	0.1	3.1	0.6	
Delay (s)	74.8		57.3	66.7		66.0	66.9	15.2	20.2	72.3	6.3	
Level of Service	E		E	E		E	E	B	C	E	A	
Approach Delay (s)		61.8			66.4			19.3			7.7	
Approach LOS		E			E			B			A	

Intersection Summary			
HCM Average Control Delay	16.5	HCM Level of Service	B
HCM Volume to Capacity ratio	0.59		
Actuated Cycle Length (s)	150.0	Sum of lost time (s)	18.0
Intersection Capacity Utilization	64.8%	ICU Level of Service	C
Analysis Period (min)	15		
c Critical Lane Group			

Movement	EBL	EBT	EBR	WBL	WBT	WBR	NBL	NBT	NBR	SBL	SBT	SBR
Lane Configurations												
Volume (vph)	19	11	16	547	26	218	19	1248	307	202	1752	25
Ideal Flow (vphpl)	1900	1900	1900	1900	1900	1900	1900	1900	1900	1900	1900	1900
Total Lost time (s)		6.0	6.0	6.0	6.0	6.0	6.0	6.0	6.0	6.0	6.0	
Lane Util. Factor		1.00	1.00	0.95	0.95	1.00	1.00	0.91	1.00	1.00	0.91	
Frt		1.00	0.85	1.00	1.00	0.85	1.00	1.00	0.85	1.00	1.00	
Flt Protected		0.97	1.00	0.95	0.96	1.00	0.95	1.00	1.00	0.95	1.00	
Satd. Flow (prot)		1806	1583	1681	1693	1583	1770	5085	1583	1770	5075	
Flt Permitted		0.97	1.00	0.95	0.96	1.00	0.09	1.00	1.00	0.11	1.00	
Satd. Flow (perm)		1806	1583	1681	1693	1583	159	5085	1583	204	5075	
Peak-hour factor, PHF	0.95	0.95	0.95	0.95	0.95	0.95	0.95	0.95	0.95	0.95	0.95	0.95
Adj. Flow (vph)	20	12	17	576	27	229	20	1314	323	213	1844	26
RTOR Reduction (vph)	0	0	16	0	0	97	0	0	175	0	0	0
Lane Group Flow (vph)	0	32	1	300	303	132	20	1314	148	213	1870	0
Turn Type	Split		Perm	Split		Perm	pm+pt		Perm	pm+pt		
Protected Phases	4	4		8	8		5	2		1	6	
Permitted Phases			4			8	2		2	6		
Actuated Green, G (s)		9.4	9.4	32.3	32.3	32.3	68.9	68.9	68.9	81.9	81.9	
Effective Green, g (s)		9.4	9.4	32.3	32.3	32.3	68.9	68.9	68.9	81.9	81.9	
Actuated g/C Ratio		0.06	0.06	0.22	0.22	0.22	0.46	0.46	0.46	0.55	0.55	
Clearance Time (s)		6.0	6.0	6.0	6.0	6.0	6.0	6.0	6.0	6.0	6.0	
Vehicle Extension (s)		3.0	3.0	3.0	3.0	3.0	3.0	3.0	3.0	3.0	3.0	
Lane Grp Cap (vph)		113	99	362	365	341	99	2336	727	272	2771	
v/s Ratio Prot		c0.02		0.18	c0.18		0.00	c0.26		0.08	c0.37	
v/s Ratio Perm			0.00			0.08	0.09		0.09	c0.35		
v/c Ratio		0.28	0.01	0.83	0.83	0.39	0.20	0.56	0.20	0.78	0.67	
Uniform Delay, d1		67.1	65.9	56.2	56.2	50.4	33.7	29.6	24.2	25.9	24.5	
Progression Factor		1.00	1.00	1.00	1.00	1.00	0.34	0.31	0.12	1.49	0.51	
Incremental Delay, d2		1.4	0.0	14.4	14.7	0.7	0.6	0.6	0.4	11.8	1.1	
Delay (s)		68.5	66.0	70.6	70.9	51.1	12.1	9.7	3.3	50.4	13.6	
Level of Service		E	E	E	E	D	B	A	A	D	B	
Approach Delay (s)		67.6			65.4			8.5			17.4	
Approach LOS		E			E			A			B	

Intersection Summary			
HCM Average Control Delay	23.4	HCM Level of Service	C
HCM Volume to Capacity ratio	0.71		
Actuated Cycle Length (s)	150.0	Sum of lost time (s)	18.0
Intersection Capacity Utilization	75.2%	ICU Level of Service	D
Analysis Period (min)	15		
c Critical Lane Group			

Movement	EBL	EBT	EBR	WBL	WBT	WBR	NBL	NBT	NBR	SBL	SBT	SBR
Lane Configurations												
Volume (vph)	267	604	375	18	189	162	96	1122	61	391	1791	527
Ideal Flow (vphpl)	1900	1900	1900	1900	1900	1900	1900	1900	1900	1900	1900	1900
Total Lost time (s)	6.0	6.0	6.0	6.0	6.0	6.0	6.0	6.0		6.0	6.0	6.0
Lane Util. Factor	0.91	0.91	1.00	0.91	0.91	1.00	1.00	0.91		1.00	0.91	1.00
Frt	1.00	1.00	0.85	1.00	1.00	0.85	1.00	0.99		1.00	1.00	0.85
Flt Protected	0.95	1.00	1.00	0.95	1.00	1.00	0.95	1.00		0.95	1.00	1.00
Satd. Flow (prot)	1610	3383	1583	1610	3389	1583	1770	5046		1770	5085	1583
Flt Permitted	0.95	1.00	1.00	0.95	1.00	1.00	0.95	1.00		0.12	1.00	1.00
Satd. Flow (perm)	1610	3383	1583	1610	3389	1583	1770	5046		230	5085	1583
Peak-hour factor, PHF	0.92	0.92	0.92	0.92	0.92	0.92	0.92	0.92	0.92	0.92	0.92	0.92
Adj. Flow (vph)	290	657	408	20	205	176	104	1220	66	425	1947	573
RTOR Reduction (vph)	0	0	242	0	0	160	0	4	0	0	0	315
Lane Group Flow (vph)	261	686	166	18	207	16	104	1282	0	425	1947	258
Turn Type	Split		Perm	Split		Perm	Prot			pm+pt		Perm
Protected Phases	4	4		8	8		5	2		1	6	
Permitted Phases			4			8				6		6
Actuated Green, G (s)	32.7	32.7	32.7	13.9	13.9	13.9	11.9	44.3		67.5	67.5	67.5
Effective Green, g (s)	32.7	32.7	32.7	13.9	13.9	13.9	11.9	44.3		67.5	67.5	67.5
Actuated g/C Ratio	0.22	0.22	0.22	0.09	0.09	0.09	0.08	0.30		0.45	0.45	0.45
Clearance Time (s)	6.0	6.0	6.0	6.0	6.0	6.0	6.0	6.0		6.0	6.0	6.0
Vehicle Extension (s)	3.0	3.0	3.0	3.0	3.0	3.0	3.0	3.0		3.0	3.0	3.0
Lane Grp Cap (vph)	351	737	345	149	314	147	140	1490		464	2288	712
v/s Ratio Prot	0.16	c0.20		0.01	c0.06		0.06	c0.25		c0.21	0.38	
v/s Ratio Perm			0.10			0.01				c0.20		0.16
v/c Ratio	0.74	0.93	0.48	0.12	0.66	0.11	0.74	0.86		0.92	0.85	0.36
Uniform Delay, d1	54.7	57.5	51.2	62.4	65.8	62.4	67.6	49.9		46.8	36.8	27.1
Progression Factor	1.00	1.00	1.00	1.00	1.00	1.00	1.00	1.00		0.88	0.84	1.05
Incremental Delay, d2	8.3	18.4	1.1	0.4	4.9	0.3	19.0	6.7		20.1	3.6	1.2
Delay (s)	63.0	75.9	52.3	62.8	70.7	62.7	86.6	56.7		61.2	34.5	29.6
Level of Service	E	E	D	E	E	E	F	E		E	C	C
Approach Delay (s)		66.3			66.8			58.9			37.4	
Approach LOS		E			E			E			D	

Intersection Summary			
HCM Average Control Delay	50.7	HCM Level of Service	D
HCM Volume to Capacity ratio	0.89		
Actuated Cycle Length (s)	150.0	Sum of lost time (s)	24.0
Intersection Capacity Utilization	86.6%	ICU Level of Service	E
Analysis Period (min)	15		
c Critical Lane Group			

Movement	EBL	EBT	WBT	WBR	SBL	SBR
Lane Configurations						
Volume (vph)	1150	810	715	10	0	650
Ideal Flow (vphpl)	1900	1900	1900	1900	1900	1900
Total Lost time (s)	6.0	4.0	6.0	6.0		4.0
Lane Util. Factor	0.94	0.95	0.95	1.00		1.00
Frt	1.00	1.00	1.00	0.85		0.86
Flt Protected	0.95	1.00	1.00	1.00		1.00
Satd. Flow (prot)	4990	3539	3539	1583		1611
Flt Permitted	0.95	1.00	1.00	1.00		1.00
Satd. Flow (perm)	4990	3539	3539	1583		1611
Peak-hour factor, PHF	0.92	0.92	0.92	0.92	0.92	0.92
Adj. Flow (vph)	1250	880	777	11	0	707
RTOR Reduction (vph)	0	0	0	6	0	0
Lane Group Flow (vph)	1250	880	777	5	0	707
Turn Type	Prot			Perm		Free
Protected Phases	1		2			
Permitted Phases		Free		2		Free
Actuated Green, G (s)	72.0	150.0	66.0	66.0		150.0
Effective Green, g (s)	72.0	150.0	66.0	66.0		150.0
Actuated g/C Ratio	0.48	1.00	0.44	0.44		1.00
Clearance Time (s)	6.0		6.0	6.0		
Lane Grp Cap (vph)	2395	3539	1557	697		1611
v/s Ratio Prot	c0.25		c0.22			
v/s Ratio Perm		0.25		0.00		0.44
v/c Ratio	0.52	0.25	0.50	0.01		0.44
Uniform Delay, d1	27.1	0.0	30.1	23.6		0.0
Progression Factor	1.00	1.00	1.47	1.89		1.00
Incremental Delay, d2	0.8	0.2	1.1	0.0		0.9
Delay (s)	27.9	0.2	45.6	44.7		0.9
Level of Service	C	A	D	D		A
Approach Delay (s)		16.4	45.5		0.9	
Approach LOS		B	D		A	

Intersection Summary			
HCM Average Control Delay	19.7	HCM Level of Service	B
HCM Volume to Capacity ratio	0.51		
Actuated Cycle Length (s)	150.0	Sum of lost time (s)	12.0
Intersection Capacity Utilization	50.5%	ICU Level of Service	A
Analysis Period (min)	15		

c Critical Lane Group

Movement	EBL	EBT	EBR	WBL	WBT	WBR	NBL	NBT	NBR	SBL	SBT	SBR
Lane Configurations												
Volume (vph)	550	190	80	50	270	80	50	250	50	70	370	330
Ideal Flow (vphpl)	1900	1900	1900	1900	1900	1900	1900	1900	1900	1900	1900	1900
Total Lost time (s)	6.0	6.0	4.0	6.0	6.0		6.0	6.0		6.0	6.0	6.0
Lane Util. Factor	0.97	0.95	1.00	1.00	0.95		1.00	0.95		1.00	0.95	0.88
Frt	1.00	1.00	0.85	1.00	0.97		1.00	0.98		1.00	1.00	0.85
Flt Protected	0.95	1.00	1.00	0.95	1.00		0.95	1.00		0.95	1.00	1.00
Satd. Flow (prot)	3433	3539	1583	1770	3418		1770	3451		1770	3539	2787
Flt Permitted	0.95	1.00	1.00	0.95	1.00		0.95	1.00		0.95	1.00	1.00
Satd. Flow (perm)	3433	3539	1583	1770	3418		1770	3451		1770	3539	2787
Peak-hour factor, PHF	0.92	0.92	0.92	1.00	1.00	1.00	0.92	0.92	0.92	0.92	0.92	0.92
Adj. Flow (vph)	598	207	87	50	270	80	54	272	54	76	402	359
RTOR Reduction (vph)	0	0	0	0	15	0	0	11	0	0	0	208
Lane Group Flow (vph)	598	207	87	50	335	0	54	315	0	76	402	151
Turn Type	Prot		Free	Prot			Split			Split		pt+ov
Protected Phases	1	6		5	2		4	4		8	8	8 1
Permitted Phases			Free									
Actuated Green, G (s)	33.4	24.2	150.0	59.4	50.2		18.9	18.9		23.5	23.5	62.9
Effective Green, g (s)	33.4	24.2	150.0	59.4	50.2		18.9	18.9		23.5	23.5	62.9
Actuated g/C Ratio	0.22	0.16	1.00	0.40	0.33		0.13	0.13		0.16	0.16	0.42
Clearance Time (s)	6.0	6.0		6.0	6.0		6.0	6.0		6.0	6.0	
Vehicle Extension (s)	3.0	3.0		3.0	3.0		3.0	3.0		3.0	3.0	
Lane Grp Cap (vph)	764	571	1583	701	1144		223	435		277	554	1169
v/s Ratio Prot	c0.17	0.06		0.03	c0.10		0.03	c0.09		0.04	c0.11	0.05
v/s Ratio Perm			0.05									
v/c Ratio	0.78	0.36	0.05	0.07	0.29		0.24	0.72		0.27	0.73	0.13
Uniform Delay, d1	54.9	56.0	0.0	28.2	36.8		59.1	63.0		55.7	60.2	26.7
Progression Factor	0.53	0.53	1.00	0.62	0.72		1.15	1.18		1.00	1.00	1.00
Incremental Delay, d2	4.6	0.3	0.1	0.2	0.6		0.6	5.7		0.5	4.7	0.1
Delay (s)	33.9	29.9	0.1	17.6	27.1		68.6	79.8		56.3	64.9	26.8
Level of Service	C	C	A	B	C		E	E		E	E	C
Approach Delay (s)		29.7			25.9			78.2			47.8	
Approach LOS		C			C			E			D	

Intersection Summary			
HCM Average Control Delay	42.5	HCM Level of Service	D
HCM Volume to Capacity ratio	0.57		
Actuated Cycle Length (s)	150.0	Sum of lost time (s)	24.0
Intersection Capacity Utilization	60.1%	ICU Level of Service	B
Analysis Period (min)	15		
c Critical Lane Group			

Intersection Sign configuration not allowed in HCM analysis.

Movement	EBL	EBT	EBR	WBL	WBT	WBR	NBL	NBT	NBR	SBL	SBT	SBR
Lane Configurations												
Volume (vph)	140	15	155	5	25	15	170	105	5	0	125	205
Ideal Flow (vphpl)	1900	1900	1900	1900	1900	1900	1900	1900	1900	1900	1900	1900
Lane Width	11	12	11	12	12	12	11	11	12	12	11	11
Total Lost time (s)		6.0	6.0	6.0	6.0		6.0	6.0			6.0	
Lane Util. Factor		1.00	0.88	1.00	1.00		0.97	0.95			0.95	
Frt		1.00	0.85	1.00	0.94		1.00	0.99			0.91	
Flt Protected		0.96	1.00	0.95	1.00		0.95	1.00			1.00	
Satd. Flow (prot)		1783	2694	1770	1757		3319	3396			3102	
Flt Permitted		0.72	1.00	0.95	1.00		0.95	1.00			1.00	
Satd. Flow (perm)		1332	2694	1770	1757		3319	3396			3102	
Peak-hour factor, PHF	0.92	0.90	0.92	0.90	0.90	0.90	0.92	0.92	0.90	0.90	0.92	0.92
Adj. Flow (vph)	152	17	168	6	28	17	185	114	6	0	136	223
RTOR Reduction (vph)	0	0	125	0	8	0	0	2	0	0	165	0
Lane Group Flow (vph)	0	169	43	6	37	0	185	118	0	0	194	0
Turn Type	Perm		pt+ov	Prot			Prot			Prot		
Protected Phases		6	6 7	5	2		7	4		3	8	
Permitted Phases	6											
Actuated Green, G (s)		24.7	38.4	48.3	79.0		13.7	59.0			39.3	
Effective Green, g (s)		24.7	38.4	48.3	79.0		13.7	59.0			39.3	
Actuated g/C Ratio		0.16	0.26	0.32	0.53		0.09	0.39			0.26	
Clearance Time (s)		6.0		6.0	6.0		6.0	6.0			6.0	
Vehicle Extension (s)		3.0		3.0	3.0		3.0	3.0			3.0	
Lane Grp Cap (vph)		219	690	570	925		303	1336			813	
v/s Ratio Prot			0.02	0.00	c0.02		c0.06	0.03			c0.06	
v/s Ratio Perm		c0.13										
v/c Ratio		0.77	0.06	0.01	0.04		0.61	0.09			0.24	
Uniform Delay, d1		60.0	42.2	34.6	17.2		65.6	28.6			43.6	
Progression Factor		0.50	2.01	1.00	1.00		1.47	0.74			1.05	
Incremental Delay, d2		15.4	0.0	0.0	0.1		3.6	0.1			0.1	
Delay (s)		45.6	84.8	34.6	17.2		100.2	21.3			46.0	
Level of Service		D	F	C	B		F	C			D	
Approach Delay (s)		65.1			19.3			69.2			46.0	
Approach LOS		E			B			E			D	

Intersection Summary			
HCM Average Control Delay	57.6	HCM Level of Service	E
HCM Volume to Capacity ratio	0.29		
Actuated Cycle Length (s)	150.0	Sum of lost time (s)	18.0
Intersection Capacity Utilization	45.1%	ICU Level of Service	A
Analysis Period (min)	15		

c Critical Lane Group

Movement	EBL	EBT	EBR	WBL	WBT	WBR	NBL	NBT	NBR	SBL	SBT	SBR
Lane Configurations												
Volume (vph)	75	500	525	170	690	40	155	235	20	30	415	55
Ideal Flow (vphpl)	1900	1900	1900	1900	1900	1900	1900	1900	1900	1900	1900	1900
Total Lost time (s)	6.0	6.0	6.0	6.0	6.0		6.0	6.0		6.0	6.0	6.0
Lane Util. Factor	1.00	0.95	1.00	1.00	0.95		0.97	0.95		1.00	1.00	1.00
Frt	1.00	1.00	0.85	1.00	0.99		1.00	0.99		1.00	1.00	0.85
Flt Protected	0.95	1.00	1.00	0.95	1.00		0.95	1.00		0.95	1.00	1.00
Satd. Flow (prot)	1770	3539	1583	1770	3510		3433	3497		1770	1863	1583
Flt Permitted	0.19	1.00	1.00	0.45	1.00		0.95	1.00		0.95	1.00	1.00
Satd. Flow (perm)	349	3539	1583	837	3510		3433	3497		1770	1863	1583
Peak-hour factor, PHF	0.92	0.92	0.92	0.92	0.92	0.92	0.92	0.92	0.92	0.92	0.92	0.92
Adj. Flow (vph)	82	543	571	185	750	43	168	255	22	33	451	60
RTOR Reduction (vph)	0	0	174	0	2	0	0	5	0	0	0	37
Lane Group Flow (vph)	82	543	397	185	791	0	168	272	0	33	451	23
Turn Type	pm+pt		Perm	pm+pt			Prot			Prot		Perm
Protected Phases	1	6		5	2		7	4		3	8	
Permitted Phases	6		6	2								8
Actuated Green, G (s)	63.8	63.8	63.8	64.9	64.9		9.9	46.6		5.6	42.3	42.3
Effective Green, g (s)	63.8	63.8	63.8	64.9	64.9		9.9	46.6		5.6	42.3	42.3
Actuated g/C Ratio	0.43	0.43	0.43	0.43	0.43		0.07	0.31		0.04	0.28	0.28
Clearance Time (s)	6.0	6.0	6.0	6.0	6.0		6.0	6.0		6.0	6.0	6.0
Vehicle Extension (s)	3.0	3.0	3.0	3.0	3.0		3.0	3.0		3.0	3.0	3.0
Lane Grp Cap (vph)	233	1505	673	424	1519		227	1086		66	525	446
v/s Ratio Prot	0.02	0.15		0.03	c0.23		c0.05	c0.08		0.02	c0.24	
v/s Ratio Perm	0.13		c0.25	0.16								0.01
v/c Ratio	0.35	0.36	0.59	0.44	0.52		0.74	0.25		0.50	0.86	0.05
Uniform Delay, d1	28.5	29.3	33.1	31.0	31.2		68.8	38.6		70.8	51.0	39.2
Progression Factor	0.86	0.82	0.69	1.04	1.05		1.00	1.00		1.63	0.39	0.03
Incremental Delay, d2	0.8	0.6	3.5	0.7	1.2		12.2	0.1		5.3	12.1	0.0
Delay (s)	25.5	24.6	26.4	32.9	33.8		81.0	38.8		121.1	31.8	1.2
Level of Service	C	C	C	C	C		F	D		F	C	A
Approach Delay (s)		25.5			33.6			54.7			33.9	
Approach LOS		C			C			D			C	

Intersection Summary			
HCM Average Control Delay	33.6	HCM Level of Service	C
HCM Volume to Capacity ratio	0.70		
Actuated Cycle Length (s)	150.0	Sum of lost time (s)	24.0
Intersection Capacity Utilization	78.8%	ICU Level of Service	D
Analysis Period (min)	15		
c Critical Lane Group			

Movement	EBL	EBT	EBR	WBL	WBT	WBR	NBL	NBT	NBR	SBL	SBT	SBR
Lane Configurations												
Volume (vph)	10	465	75	100	825	255	20	15	30	130	100	55
Ideal Flow (vphpl)	1900	1900	1900	1900	1900	1900	1900	1900	1900	1900	1900	1900
Lane Width	11	11	11	11	11	11	11	11	11	11	11	11
Total Lost time (s)	6.0	6.0		6.0	6.0	6.0	6.0	6.0		6.0	6.0	
Lane Util. Factor	1.00	0.95		1.00	0.95	0.88	1.00	1.00		0.97	1.00	
Frt	1.00	0.98		1.00	1.00	0.85	1.00	0.90		1.00	0.95	
Flt Protected	0.95	1.00		0.95	1.00	1.00	0.95	1.00		0.95	1.00	
Satd. Flow (prot)	1711	3350		1711	3421	2694	1711	1619		3319	1705	
Flt Permitted	0.27	1.00		0.40	1.00	1.00	0.95	1.00		0.95	1.00	
Satd. Flow (perm)	495	3350		725	3421	2694	1711	1619		3319	1705	
Peak-hour factor, PHF	0.92	0.92	0.92	0.92	0.92	0.92	0.92	0.92	0.92	0.92	0.92	0.92
Adj. Flow (vph)	11	505	82	109	897	277	22	16	33	141	109	60
RTOR Reduction (vph)	0	7	0	0	0	0	0	32	0	0	15	0
Lane Group Flow (vph)	11	580	0	109	897	277	22	17	0	141	154	0
Turn Type	pm+pt			pm+pt		pt+ov	Prot			Prot		
Protected Phases	1	6		5	2	2 3	7	4		3	8	
Permitted Phases	6			2								
Actuated Green, G (s)	93.1	90.9		106.9	98.7	123.4	5.1	6.4		18.7	20.0	
Effective Green, g (s)	93.1	90.9		106.9	98.7	123.4	5.1	6.4		18.7	20.0	
Actuated g/C Ratio	0.62	0.61		0.71	0.66	0.82	0.03	0.04		0.12	0.13	
Clearance Time (s)	6.0	6.0		6.0	6.0		6.0	6.0		6.0	6.0	
Vehicle Extension (s)	3.0	3.0		3.0	3.0		3.0	3.0		3.0	3.0	
Lane Grp Cap (vph)	325	2030		582	2251	2216	58	69		414	227	
v/s Ratio Prot	0.00	0.17		c0.01	c0.26	0.10	c0.01	0.01		0.04	c0.09	
v/s Ratio Perm	0.02			0.12								
v/c Ratio	0.03	0.29		0.19	0.40	0.12	0.38	0.25		0.34	0.68	
Uniform Delay, d1	16.2	14.1		9.4	11.9	2.6	70.9	69.5		60.0	61.9	
Progression Factor	1.87	2.49		0.01	0.04	0.09	1.00	1.00		0.98	0.98	
Incremental Delay, d2	0.0	0.3		0.1	0.4	0.0	4.1	1.9		0.5	7.7	
Delay (s)	30.5	35.4		0.3	0.9	0.3	75.0	71.4		59.5	68.8	
Level of Service	C	D		A	A	A	E	E		E	E	
Approach Delay (s)		35.3			0.7			72.5			64.6	
Approach LOS		D			A			E			E	

Intersection Summary			
HCM Average Control Delay	20.9	HCM Level of Service	C
HCM Volume to Capacity ratio	0.40		
Actuated Cycle Length (s)	150.0	Sum of lost time (s)	12.0
Intersection Capacity Utilization	57.8%	ICU Level of Service	B
Analysis Period (min)	15		

c Critical Lane Group

Movement	EBL	EBT	EBR	WBL	WBT	WBR	NBL	NBT	NBR	SBL	SBT	SBR
Lane Configurations												
Volume (vph)	60	550	15	10	1200	140	20	0	5	95	0	30
Ideal Flow (vphpl)	1900	1900	1900	1900	1900	1900	1900	1900	1900	1900	1900	1900
Total Lost time (s)	6.0	6.0		6.0	6.0	6.0	6.0	6.0		6.0	6.0	
Lane Util. Factor	1.00	0.95		1.00	0.95	1.00	1.00	1.00		0.95	0.95	
Frt	1.00	1.00		1.00	1.00	0.85	1.00	0.85		1.00	0.93	
Flt Protected	0.95	1.00		0.95	1.00	1.00	0.95	1.00		0.95	0.98	
Satd. Flow (prot)	1770	3525		1770	3539	1583	1770	1583		1681	1597	
Flt Permitted	0.14	1.00		0.40	1.00	1.00	0.95	1.00		0.95	0.98	
Satd. Flow (perm)	268	3525		750	3539	1583	1770	1583		1681	1597	
Peak-hour factor, PHF	0.95	0.95	0.95	0.95	0.95	0.95	0.95	0.95	0.95	0.95	0.95	0.95
Adj. Flow (vph)	63	579	16	11	1263	147	21	0	5	100	0	32
RTOR Reduction (vph)	0	1	0	0	0	57	0	4	0	0	24	0
Lane Group Flow (vph)	63	594	0	11	1263	90	21	1	0	68	40	0
Turn Type	pm+pt			Perm		Perm	Split			Split		
Protected Phases	7	4			8		2	2		6	6	
Permitted Phases	4			8		8						
Actuated Green, G (s)	98.0	98.0		85.6	85.6	85.6	16.0	16.0		18.0	18.0	
Effective Green, g (s)	98.0	98.0		85.6	85.6	85.6	16.0	16.0		18.0	18.0	
Actuated g/C Ratio	0.65	0.65		0.57	0.57	0.57	0.11	0.11		0.12	0.12	
Clearance Time (s)	6.0	6.0		6.0	6.0	6.0	6.0	6.0		6.0	6.0	
Vehicle Extension (s)	3.0	3.0		3.0	3.0	3.0	3.0	3.0		3.0	3.0	
Lane Grp Cap (vph)	239	2303		428	2020	903	189	169		202	192	
v/s Ratio Prot	0.01	c0.17			c0.36		c0.01	0.00		c0.04	0.03	
v/s Ratio Perm	0.16			0.01		0.06						
v/c Ratio	0.26	0.26		0.03	0.63	0.10	0.11	0.00		0.34	0.21	
Uniform Delay, d1	27.6	10.8		14.0	21.5	14.7	60.6	59.9		60.5	59.6	
Progression Factor	0.87	0.76		0.56	1.05	0.72	1.00	1.00		1.00	1.00	
Incremental Delay, d2	0.6	0.3		0.1	1.4	0.2	1.2	0.0		4.5	2.5	
Delay (s)	24.7	8.5		8.0	24.0	10.7	61.8	59.9		65.0	62.0	
Level of Service	C	A		A	C	B	E	E		E	E	
Approach Delay (s)		10.0			22.5			61.4			63.6	
Approach LOS		B			C			E			E	

Intersection Summary			
HCM Average Control Delay	21.7	HCM Level of Service	C
HCM Volume to Capacity ratio	0.48		
Actuated Cycle Length (s)	150.0	Sum of lost time (s)	18.0
Intersection Capacity Utilization	61.7%	ICU Level of Service	B
Analysis Period (min)	15		
c Critical Lane Group			

Movement	EBT	EBR	WBL	WBT	NBL	NBR
Lane Configurations						
Volume (vph)	515	135	330	1270	80	135
Ideal Flow (vphpl)	1900	1900	1900	1900	1900	1900
Total Lost time (s)	6.0		6.0	6.0	6.0	6.0
Lane Util. Factor	0.95		1.00	0.95	0.97	1.00
Frt	0.97		1.00	1.00	1.00	0.85
Flt Protected	1.00		0.95	1.00	0.95	1.00
Satd. Flow (prot)	3429		1770	3539	3433	1583
Flt Permitted	1.00		0.36	1.00	0.95	1.00
Satd. Flow (perm)	3429		665	3539	3433	1583
Peak-hour factor, PHF	0.95	0.95	0.95	0.95	0.95	0.95
Adj. Flow (vph)	542	142	347	1337	84	142
RTOR Reduction (vph)	7	0	0	0	0	131
Lane Group Flow (vph)	677	0	347	1337	84	11
Turn Type			pm+pt			Over
Protected Phases	4		3	8		3
Permitted Phases			8		2	
Actuated Green, G (s)	109.3		126.9	126.9	11.1	11.6
Effective Green, g (s)	109.3		126.9	126.9	11.1	11.6
Actuated g/C Ratio	0.73		0.85	0.85	0.07	0.08
Clearance Time (s)	6.0		6.0	6.0	6.0	6.0
Vehicle Extension (s)	3.0		3.0	3.0	3.0	3.0
Lane Grp Cap (vph)	2499		648	2994	254	122
v/s Ratio Prot	0.20		c0.04	0.38		0.01
v/s Ratio Perm			c0.41		c0.02	
v/c Ratio	0.27		0.54	0.45	0.33	0.09
Uniform Delay, d1	6.9		2.9	2.9	65.9	64.3
Progression Factor	1.17		1.13	0.99	1.00	1.00
Incremental Delay, d2	0.3		0.5	0.3	0.8	0.3
Delay (s)	8.3		3.7	3.1	66.7	64.6
Level of Service	A		A	A	E	E
Approach Delay (s)	8.3			3.2	65.4	
Approach LOS	A			A	E	

Intersection Summary			
HCM Average Control Delay	10.0	HCM Level of Service	A
HCM Volume to Capacity ratio	0.51		
Actuated Cycle Length (s)	150.0	Sum of lost time (s)	12.0
Intersection Capacity Utilization	55.2%	ICU Level of Service	B
Analysis Period (min)	15		
c Critical Lane Group			

Movement	EBL	EBT	EBR	WBL	WBT	WBR	NBL	NBT	NBR	SBL	SBT	SBR
Lane Configurations												
Volume (vph)	170	370	110	0	1220	365	180	160	0	120	280	200
Ideal Flow (vphpl)	1900	1900	1900	1900	1900	1900	1900	1900	1900	1900	1900	1900
Total Lost time (s)	6.0	6.0	6.0		6.0	6.0		6.0		6.0	6.0	
Lane Util. Factor	1.00	0.95	1.00		0.95	1.00		0.95		0.91	0.91	
Frt	1.00	1.00	0.85		1.00	0.85		1.00		1.00	0.94	
Flt Protected	0.95	1.00	1.00		1.00	1.00		0.97		0.95	1.00	
Satd. Flow (prot)	1770	3539	1583		3539	1583		3448		1610	3179	
Flt Permitted	0.08	1.00	1.00		1.00	1.00		0.97		0.95	1.00	
Satd. Flow (perm)	154	3539	1583		3539	1583		3448		1610	3179	
Peak-hour factor, PHF	0.95	0.95	0.95	0.95	0.95	0.95	0.95	0.95	0.95	0.95	0.95	0.95
Adj. Flow (vph)	179	389	116	0	1284	384	189	168	0	126	295	211
RTOR Reduction (vph)	0	0	49	0	0	150	0	0	0	0	68	0
Lane Group Flow (vph)	179	389	67	0	1284	234	0	357	0	113	451	0
Turn Type	pm+pt		Perm			Perm	Split			Split		
Protected Phases	7	4			8		2	2		6	6	
Permitted Phases	4		4			8						
Actuated Green, G (s)	87.0	87.0	87.0		66.0	66.0		20.0		25.0	25.0	
Effective Green, g (s)	87.0	87.0	87.0		66.0	66.0		20.0		25.0	25.0	
Actuated g/C Ratio	0.58	0.58	0.58		0.44	0.44		0.13		0.17	0.17	
Clearance Time (s)	6.0	6.0	6.0		6.0	6.0		6.0		6.0	6.0	
Vehicle Extension (s)	3.0	3.0	3.0		3.0	3.0		3.0		3.0	3.0	
Lane Grp Cap (vph)	251	2053	918		1557	697		460		268	530	
v/s Ratio Prot	c0.07	0.11			c0.36			c0.10		0.07	c0.14	
v/s Ratio Perm	0.34		0.04			0.15						
v/c Ratio	0.71	0.19	0.07		0.82	0.34		0.78		0.42	0.85	
Uniform Delay, d1	50.5	14.9	13.8		36.9	27.6		62.8		56.0	60.7	
Progression Factor	1.08	1.28	2.58		0.82	0.61		1.10		1.00	1.00	
Incremental Delay, d2	9.0	0.2	0.2		4.6	1.2		12.0		4.8	15.7	
Delay (s)	63.4	19.2	35.8		34.9	18.0		80.9		60.8	76.3	
Level of Service	E	B	D		C	B		F		E	E	
Approach Delay (s)		33.6			31.0			80.9			73.6	
Approach LOS		C			C			F			E	

Intersection Summary			
HCM Average Control Delay	44.9	HCM Level of Service	D
HCM Volume to Capacity ratio	0.77		
Actuated Cycle Length (s)	150.0	Sum of lost time (s)	18.0
Intersection Capacity Utilization	84.9%	ICU Level of Service	E
Analysis Period (min)	15		
c Critical Lane Group			

Movement	EBL	EBT	EBR	WBL	WBT	WBR	NBL	NBT	NBR	SBL	SBT	SBR
Lane Configurations												
Volume (vph)	15	585	25	10	1930	0	55	0	15	0	0	25
Ideal Flow (vphpl)	1900	1900	1900	1900	1900	1900	1900	1900	1900	1900	1900	1900
Total Lost time (s)	6.0	6.0		6.0	6.0		6.0	6.0			6.0	
Lane Util. Factor	1.00	0.95		1.00	0.95		1.00	1.00			1.00	
Frt	1.00	0.99		1.00	1.00		1.00	0.85			0.86	
Flt Protected	0.95	1.00		0.95	1.00		0.95	1.00			1.00	
Satd. Flow (prot)	1770	3518		1770	3539		1770	1583			1611	
Flt Permitted	0.07	1.00		0.38	1.00		0.74	1.00			1.00	
Satd. Flow (perm)	137	3518		704	3539		1379	1583			1611	
Peak-hour factor, PHF	0.95	0.95	0.95	0.95	0.95	0.95	0.95	0.95	0.95	0.95	0.95	0.95
Adj. Flow (vph)	16	616	26	11	2032	0	58	0	16	0	0	26
RTOR Reduction (vph)	0	2	0	0	0	0	0	14	0	0	23	0
Lane Group Flow (vph)	16	640	0	11	2032	0	58	2	0	0	3	0
Turn Type	Perm			pm+pt			Perm			Perm		
Protected Phases		4		3	8			2			6	
Permitted Phases	4			8			2			6		
Actuated Green, G (s)	112.4	112.4		120.0	120.0		18.0	18.0			18.0	
Effective Green, g (s)	112.4	112.4		120.0	120.0		18.0	18.0			18.0	
Actuated g/C Ratio	0.75	0.75		0.80	0.80		0.12	0.12			0.12	
Clearance Time (s)	6.0	6.0		6.0	6.0		6.0	6.0			6.0	
Vehicle Extension (s)	3.0	3.0		3.0	3.0		3.0	3.0			3.0	
Lane Grp Cap (vph)	103	2636		575	2831		165	190			193	
v/s Ratio Prot		0.18		0.00	c0.57			0.00			0.00	
v/s Ratio Perm	0.12			0.02			c0.04					
v/c Ratio	0.16	0.24		0.02	0.72		0.35	0.01			0.02	
Uniform Delay, d1	5.3	5.8		3.3	7.0		60.6	58.2			58.2	
Progression Factor	1.59	0.72		1.00	1.00		1.00	1.00			1.00	
Incremental Delay, d2	3.1	0.2		0.0	1.6		5.8	0.1			0.2	
Delay (s)	11.6	4.3		3.3	8.6		66.4	58.2			58.3	
Level of Service	B	A		A	A		E	E			E	
Approach Delay (s)		4.5			8.6			64.7			58.3	
Approach LOS		A			A			E			E	

Intersection Summary			
HCM Average Control Delay	9.6	HCM Level of Service	A
HCM Volume to Capacity ratio	0.67		
Actuated Cycle Length (s)	150.0	Sum of lost time (s)	12.0
Intersection Capacity Utilization	73.1%	ICU Level of Service	D
Analysis Period (min)	15		
c Critical Lane Group			

Movement	EBL	EBT	EBR	WBL	WBT	WBR	NBL	NBT	NBR	SBL	SBT	SBR
Lane Configurations												
Volume (vph)	150	360	410	0	310	50	560	500	25	10	790	250
Ideal Flow (vphpl)	1900	1900	1900	1900	1900	1900	1900	1900	1900	1900	1900	1900
Total Lost time (s)	6.0	6.0			6.0		6.0	6.0		6.0	6.0	
Lane Util. Factor	1.00	0.95			0.91		1.00	0.91		1.00	0.91	
Frt	1.00	0.92			0.98		1.00	0.99		1.00	0.96	
Flt Protected	0.95	1.00			1.00		0.95	1.00		0.95	1.00	
Satd. Flow (prot)	1770	3256			4979		1770	5049		1770	4902	
Flt Permitted	0.24	1.00			1.00		0.12	1.00		0.95	1.00	
Satd. Flow (perm)	450	3256			4979		223	5049		1770	4902	
Peak-hour factor, PHF	0.95	0.95	0.95	0.95	0.95	0.95	0.95	0.95	0.95	0.95	0.95	0.95
Adj. Flow (vph)	158	379	432	0	326	53	589	526	26	11	832	263
RTOR Reduction (vph)	0	141	0	0	15	0	0	3	0	0	38	0
Lane Group Flow (vph)	158	670	0	0	364	0	589	549	0	11	1057	0
Turn Type	pm+pt						pm+pt			Prot		
Protected Phases	7	4			8		5	2		1	6	
Permitted Phases	4						2					
Actuated Green, G (s)	35.8	35.8			15.1		94.6	94.6		1.6	37.6	
Effective Green, g (s)	35.8	35.8			15.1		94.6	94.6		1.6	37.6	
Actuated g/C Ratio	0.24	0.24			0.10		0.63	0.63		0.01	0.25	
Clearance Time (s)	6.0	6.0			6.0		6.0	6.0		6.0	6.0	
Vehicle Extension (s)	3.0	3.0			3.0		3.0	3.0		3.0	3.0	
Lane Grp Cap (vph)	237	777			501		745	3184		19	1229	
v/s Ratio Prot	0.07	c0.21			0.07		c0.31	0.11		0.01	c0.22	
v/s Ratio Perm	0.09						0.19					
v/c Ratio	0.67	0.86			0.73		0.79	0.17		0.58	0.86	
Uniform Delay, d1	48.2	54.7			65.4		32.7	11.5		73.9	53.7	
Progression Factor	1.00	1.00			1.21		0.41	0.50		0.73	0.80	
Incremental Delay, d2	6.9	9.7			5.2		4.6	0.1		35.7	7.8	
Delay (s)	55.2	64.5			84.6		18.1	5.8		89.8	50.8	
Level of Service	E	E			F		B	A		F	D	
Approach Delay (s)		63.0			84.6			12.2			51.2	
Approach LOS		E			F			B			D	

Intersection Summary			
HCM Average Control Delay	45.5	HCM Level of Service	D
HCM Volume to Capacity ratio	0.80		
Actuated Cycle Length (s)	150.0	Sum of lost time (s)	12.0
Intersection Capacity Utilization	90.0%	ICU Level of Service	E
Analysis Period (min)	15		
c Critical Lane Group			

Movement	EBL	EBT	EBR	WBL	WBT	WBR	NBL	NBT	NBR	SBL	SBT	SBR
Lane Configurations												
Volume (vph)	120	575	5	0	940	10	10	0	5	20	0	100
Ideal Flow (vphpl)	1900	1900	1900	1900	1900	1900	1900	1900	1900	1900	1900	1900
Total Lost time (s)	6.0	6.0			6.0			6.0			6.0	6.0
Lane Util. Factor	1.00	0.91			0.91			1.00			1.00	1.00
Frt	1.00	1.00			1.00			0.96			1.00	0.85
Flt Protected	0.95	1.00			1.00			0.97			0.95	1.00
Satd. Flow (prot)	1770	5079			5077			1725			1770	1583
Flt Permitted	0.23	1.00			1.00			0.89			0.75	1.00
Satd. Flow (perm)	428	5079			5077			1586			1392	1583
Peak-hour factor, PHF	0.95	0.95	0.95	0.95	0.95	0.95	0.95	0.95	0.95	0.95	0.95	0.95
Adj. Flow (vph)	126	605	5	0	989	11	11	0	5	21	0	105
RTOR Reduction (vph)	0	1	0	0	1	0	0	3	0	0	0	62
Lane Group Flow (vph)	126	609	0	0	999	0	0	13	0	0	21	43
Turn Type	Perm			Perm			Perm			Perm		Perm
Protected Phases		4			8			2			6	
Permitted Phases	4			8			2			6		6
Actuated Green, G (s)	77.2	77.2			77.2			60.8			60.8	60.8
Effective Green, g (s)	77.2	77.2			77.2			60.8			60.8	60.8
Actuated g/C Ratio	0.51	0.51			0.51			0.41			0.41	0.41
Clearance Time (s)	6.0	6.0			6.0			6.0			6.0	6.0
Vehicle Extension (s)	3.0	3.0			3.0			3.0			3.0	3.0
Lane Grp Cap (vph)	220	2614			2613			643			564	642
v/s Ratio Prot		0.12			0.20							
v/s Ratio Perm	c0.29							0.01			0.02	c0.03
v/c Ratio	0.57	0.23			0.38			0.02			0.04	0.07
Uniform Delay, d1	25.0	20.1			22.0			26.7			26.9	27.3
Progression Factor	1.24	1.11			1.23			1.00			1.00	1.00
Incremental Delay, d2	3.5	0.0			0.1			0.1			0.1	0.2
Delay (s)	34.6	22.3			27.1			26.8			27.1	27.5
Level of Service	C	C			C			C			C	C
Approach Delay (s)		24.4			27.1			26.8			27.4	
Approach LOS		C			C			C			C	

Intersection Summary			
HCM Average Control Delay	26.0	HCM Level of Service	C
HCM Volume to Capacity ratio	0.35		
Actuated Cycle Length (s)	150.0	Sum of lost time (s)	12.0
Intersection Capacity Utilization	47.6%	ICU Level of Service	A
Analysis Period (min)	15		
c Critical Lane Group			

Movement	EBL	EBR	NBL	NBT	SBT	SBR
Lane Configurations						
Volume (veh/h)	105	60	70	130	220	185
Sign Control	Stop			Free	Free	
Grade	0%			0%	0%	
Peak Hour Factor	0.95	0.95	0.95	0.95	0.95	0.95
Hourly flow rate (vph)	111	63	74	137	232	195
Pedestrians						
Lane Width (ft)						
Walking Speed (ft/s)						
Percent Blockage						
Right turn flare (veh)						
Median type				None	None	
Median storage veh)						
Upstream signal (ft)					1284	
pX, platoon unblocked						
vC, conflicting volume	613	329	426			
vC1, stage 1 conf vol						
vC2, stage 2 conf vol						
vCu, unblocked vol	613	329	426			
tC, single (s)	6.4	6.2	4.1			
tC, 2 stage (s)						
tF (s)	3.5	3.3	2.2			
p0 queue free %	74	91	93			
cM capacity (veh/h)	426	712	1133			

Direction, Lane #	EB 1	EB 2	NB 1	SB 1
Volume Total	111	63	211	426
Volume Left	111	0	74	0
Volume Right	0	63	0	195
cSH	426	712	1133	1700
Volume to Capacity	0.26	0.09	0.07	0.25
Queue Length 95th (ft)	26	7	5	0
Control Delay (s)	16.4	10.5	3.3	0.0
Lane LOS	C	B	A	
Approach Delay (s)	14.3		3.3	0.0
Approach LOS	B			

Intersection Summary			
Average Delay	3.9		
Intersection Capacity Utilization	49.4%	ICU Level of Service	A
Analysis Period (min)	15		

Movement	EBL	EBT	EBR	WBL	WBT	WBR	NBL	NBT	NBR	SBL	SBT	SBR
Lane Configurations												
Volume (vph)	75	155	175	585	90	25	85	985	350	25	1100	75
Ideal Flow (vphpl)	1900	1900	1900	1900	1900	1900	1900	1900	1900	1900	1900	1900
Total Lost time (s)		6.0		6.0	6.0		6.0	6.0	6.0	6.0	6.0	
Lane Util. Factor		0.95		0.97	1.00		1.00	0.95	1.00	1.00	0.91	
Frt		0.94		1.00	0.97		1.00	1.00	0.85	1.00	0.99	
Flt Protected		0.99		0.95	1.00		0.95	1.00	1.00	0.95	1.00	
Satd. Flow (prot)		3280		3433	1803		1770	3539	1583	1770	5037	
Flt Permitted		0.99		0.95	1.00		0.17	1.00	1.00	0.12	1.00	
Satd. Flow (perm)		3280		3433	1803		308	3539	1583	215	5037	
Peak-hour factor, PHF	0.95	0.95	0.95	0.95	0.95	0.95	0.95	0.95	0.95	0.95	0.95	0.95
Adj. Flow (vph)	79	163	184	616	95	26	89	1037	368	26	1158	79
RTOR Reduction (vph)	0	95	0	0	7	0	0	0	159	0	5	0
Lane Group Flow (vph)	0	331	0	616	114	0	89	1037	209	26	1232	0
Turn Type	Split			Split			pm+pt		Perm	pm+pt		
Protected Phases	4	4		8	8		5	2		1	6	
Permitted Phases							2		2	6		
Actuated Green, G (s)		19.5		32.2	32.2		70.6	70.6	70.6	63.0	63.0	
Effective Green, g (s)		19.5		32.2	32.2		70.6	70.6	70.6	63.0	63.0	
Actuated g/C Ratio		0.13		0.21	0.21		0.47	0.47	0.47	0.42	0.42	
Clearance Time (s)		6.0		6.0	6.0		6.0	6.0	6.0	6.0	6.0	
Vehicle Extension (s)		3.0		3.0	3.0		3.0	3.0	3.0	3.0	3.0	
Lane Grp Cap (vph)		426		737	387		255	1666	745	129	2116	
v/s Ratio Prot		c0.10		c0.18	0.06		0.03	c0.29		0.00	c0.24	
v/s Ratio Perm							0.14		0.13	0.08		
v/c Ratio		0.78		0.84	0.29		0.35	0.62	0.28	0.20	0.58	
Uniform Delay, d1		63.1		56.4	49.4		37.1	29.7	24.2	29.8	33.4	
Progression Factor		1.00		0.48	0.44		1.21	1.21	2.45	0.25	0.25	
Incremental Delay, d2		8.7		7.8	0.4		0.8	1.7	0.9	0.4	0.7	
Delay (s)		71.8		34.9	22.4		45.5	37.7	60.2	7.9	9.0	
Level of Service		E		C	C		D	D	E	A	A	
Approach Delay (s)		71.8			32.9			43.7			9.0	
Approach LOS		E			C			D			A	

Intersection Summary			
HCM Average Control Delay	33.5	HCM Level of Service	C
HCM Volume to Capacity ratio	0.72		
Actuated Cycle Length (s)	150.0	Sum of lost time (s)	24.0
Intersection Capacity Utilization	79.3%	ICU Level of Service	D
Analysis Period (min)	15		
c Critical Lane Group			

Movement	EBL	EBT	EBR	WBL	WBT	WBR	NBL	NBT	NBR	SBL	SBT	SBR
Lane Configurations												
Volume (vph)	130	350	50	5	610	85	20	30	5	95	95	70
Ideal Flow (vphpl)	1900	1900	1900	1900	1900	1900	1900	1900	1900	1900	1900	1900
Total Lost time (s)	6.0	6.0		6.0	6.0		6.0	6.0		6.0	6.0	6.0
Lane Util. Factor	1.00	0.95		1.00	0.95		1.00	0.95		0.95	0.95	1.00
Frt	1.00	0.98		1.00	0.98		1.00	0.98		1.00	1.00	0.85
Flt Protected	0.95	1.00		0.95	1.00		0.95	1.00		0.95	1.00	1.00
Satd. Flow (prot)	1770	3472		1770	3475		1770	3467		1681	1762	1583
Flt Permitted	0.22	1.00		0.43	1.00		0.95	1.00		0.95	1.00	1.00
Satd. Flow (perm)	414	3472		798	3475		1770	3467		1681	1762	1583
Peak-hour factor, PHF	0.95	0.95	0.95	0.95	0.95	0.95	0.95	0.95	0.95	0.95	0.95	0.95
Adj. Flow (vph)	137	368	53	5	642	89	21	32	5	100	100	74
RTOR Reduction (vph)	0	11	0	0	11	0	0	3	0	0	0	61
Lane Group Flow (vph)	137	410	0	5	720	0	21	34	0	90	110	13
Turn Type	Perm			Perm			Split			Split		Perm
Protected Phases		4			8		2	2		6	6	
Permitted Phases	4			8								6
Actuated Green, G (s)	51.3	51.3		51.3	51.3		54.7	54.7		26.0	26.0	26.0
Effective Green, g (s)	51.3	51.3		51.3	51.3		54.7	54.7		26.0	26.0	26.0
Actuated g/C Ratio	0.34	0.34		0.34	0.34		0.36	0.36		0.17	0.17	0.17
Clearance Time (s)	6.0	6.0		6.0	6.0		6.0	6.0		6.0	6.0	6.0
Vehicle Extension (s)	3.0	3.0		3.0	3.0		3.0	3.0		3.0	3.0	3.0
Lane Grp Cap (vph)	142	1187		273	1188		645	1264		291	305	274
v/s Ratio Prot		0.12			0.21		c0.01	0.01		0.05	c0.06	
v/s Ratio Perm	c0.33			0.01								0.01
v/c Ratio	0.96	0.35		0.02	0.61		0.03	0.03		0.31	0.36	0.05
Uniform Delay, d1	48.5	36.8		32.7	41.0		30.6	30.6		54.2	54.7	51.7
Progression Factor	0.77	0.65		0.14	0.37		1.00	1.00		1.55	1.55	3.82
Incremental Delay, d2	60.3	0.2		0.0	0.7		0.1	0.0		2.7	3.3	0.3
Delay (s)	97.7	24.0		4.5	16.0		30.7	30.6		86.8	88.1	197.7
Level of Service	F	C		A	B		C	C		F	F	F
Approach Delay (s)		42.1			15.9			30.7			117.3	
Approach LOS		D			B			C			F	

Intersection Summary			
HCM Average Control Delay	42.5	HCM Level of Service	D
HCM Volume to Capacity ratio	0.46		
Actuated Cycle Length (s)	150.0	Sum of lost time (s)	18.0
Intersection Capacity Utilization	53.6%	ICU Level of Service	A
Analysis Period (min)	15		
c Critical Lane Group			

Movement	EBL	EBT	EBR	WBL	WBT	WBR	NBL	NBT	NBR	SBL	SBT	SBR
Lane Configurations												
Volume (vph)	65	415	45	15	1200	220	30	10	10	80	15	90
Ideal Flow (vphpl)	1900	1900	1900	1900	1900	1900	1900	1900	1900	1900	1900	1900
Total Lost time (s)	6.0	6.0		6.0	6.0		6.0	6.0		6.0	6.0	6.0
Lane Util. Factor	1.00	0.95		1.00	0.95		1.00	1.00		1.00	1.00	1.00
Frt	1.00	0.99		1.00	0.98		1.00	0.93		1.00	1.00	0.85
Flt Protected	0.95	1.00		0.95	1.00		0.95	1.00		0.95	1.00	1.00
Satd. Flow (prot)	1770	3488		1770	3457		1770	1723		1770	1863	1583
Flt Permitted	0.09	1.00		0.46	1.00		0.75	1.00		0.74	1.00	1.00
Satd. Flow (perm)	167	3488		861	3457		1392	1723		1384	1863	1583
Peak-hour factor, PHF	0.95	0.95	0.95	0.95	0.95	0.95	0.95	0.95	0.95	0.95	0.95	0.95
Adj. Flow (vph)	68	437	47	16	1263	232	32	11	11	84	16	95
RTOR Reduction (vph)	0	7	0	0	12	0	0	8	0	0	0	70
Lane Group Flow (vph)	68	477	0	16	1483	0	32	14	0	84	16	25
Turn Type	pm+pt			Perm			Perm			Perm		Perm
Protected Phases	7	4			8			2			6	
Permitted Phases	4			8			2			6		6
Actuated Green, G (s)	98.7	98.7		85.2	85.2		39.3	39.3		39.3	39.3	39.3
Effective Green, g (s)	98.7	98.7		85.2	85.2		39.3	39.3		39.3	39.3	39.3
Actuated g/C Ratio	0.66	0.66		0.57	0.57		0.26	0.26		0.26	0.26	0.26
Clearance Time (s)	6.0	6.0		6.0	6.0		6.0	6.0		6.0	6.0	6.0
Vehicle Extension (s)	3.0	3.0		3.0	3.0		3.0	3.0		3.0	3.0	3.0
Lane Grp Cap (vph)	190	2295		489	1964		365	451		363	488	415
v/s Ratio Prot	c0.02	0.14			c0.43			0.01			0.01	
v/s Ratio Perm	0.22			0.02			0.02			c0.06		0.02
v/c Ratio	0.36	0.21		0.03	0.76		0.09	0.03		0.23	0.03	0.06
Uniform Delay, d1	38.6	10.2		14.3	24.5		41.8	41.2		43.5	41.2	41.5
Progression Factor	0.23	0.27		1.11	1.05		1.00	1.00		0.99	1.00	0.98
Incremental Delay, d2	1.0	0.0		0.0	1.7		0.5	0.1		1.5	0.1	0.3
Delay (s)	9.7	2.8		15.9	27.4		42.3	41.3		44.7	41.1	41.0
Level of Service	A	A		B	C		D	D		D	D	D
Approach Delay (s)		3.6			27.3			41.9			42.6	
Approach LOS		A			C			D			D	

Intersection Summary			
HCM Average Control Delay	23.3	HCM Level of Service	C
HCM Volume to Capacity ratio	0.55		
Actuated Cycle Length (s)	150.0	Sum of lost time (s)	12.0
Intersection Capacity Utilization	69.9%	ICU Level of Service	C
Analysis Period (min)	15		
c Critical Lane Group			

Movement	EBL	EBT	EBR	WBL	WBT	WBR	NBL	NBT	NBR	SBL	SBT	SBR
Lane Configurations												
Volume (vph)	5	0	6	149	0	45	32	1299	134	65	1858	37
Ideal Flow (vphpl)	1900	1900	1900	1900	1900	1900	1900	1900	1900	1900	1900	1900
Total Lost time (s)		6.0		6.0		6.0	6.0	6.0		6.0	6.0	
Lane Util. Factor		1.00		1.00		1.00	1.00	0.91		1.00	0.91	
Frt		0.93		1.00		0.85	1.00	0.99		1.00	1.00	
Flt Protected		0.98		0.95		1.00	0.95	1.00		0.95	1.00	
Satd. Flow (prot)		1687		1770		1583	1770	5014		1770	5071	
Flt Permitted		0.98		0.75		1.00	0.08	1.00		0.15	1.00	
Satd. Flow (perm)		1687		1398		1583	141	5014		273	5071	
Peak-hour factor, PHF	0.94	0.94	0.94	0.94	0.94	0.94	0.94	0.94	0.94	0.94	0.94	0.94
Adj. Flow (vph)	5	0	6	159	0	48	34	1382	143	69	1977	39
RTOR Reduction (vph)	0	5	0	0	0	42	0	8	0	0	1	0
Lane Group Flow (vph)	0	6	0	159	0	6	34	1517	0	69	2015	0
Turn Type	Perm			custom		custom	pm+pt			Perm		
Protected Phases		4					5	2			6	
Permitted Phases	4			8		8	2			6		
Actuated Green, G (s)		18.6		18.6		18.6	119.4	119.4		110.2	110.2	
Effective Green, g (s)		18.6		18.6		18.6	119.4	119.4		110.2	110.2	
Actuated g/C Ratio		0.12		0.12		0.12	0.80	0.80		0.73	0.73	
Clearance Time (s)		6.0		6.0		6.0	6.0	6.0		6.0	6.0	
Vehicle Extension (s)		3.0		3.0		3.0	3.0	3.0		3.0	3.0	
Lane Grp Cap (vph)		209		173		196	147	3991		201	3725	
v/s Ratio Prot							0.00	c0.30			c0.40	
v/s Ratio Perm		0.00		c0.11		0.00	0.18			0.25		
v/c Ratio		0.03		0.92		0.03	0.23	0.38		0.34	0.54	
Uniform Delay, d1		57.8		65.0		57.8	11.3	4.5		7.1	8.8	
Progression Factor		1.00		1.00		1.00	0.28	0.09		0.90	1.14	
Incremental Delay, d2		0.1		45.2		0.1	0.7	0.2		3.7	0.5	
Delay (s)		57.8		110.1		57.8	3.9	0.6		10.1	10.5	
Level of Service		E		F		E	A	A		B	B	
Approach Delay (s)		57.8			98.0			0.7			10.4	
Approach LOS		E			F			A			B	

Intersection Summary			
HCM Average Control Delay	11.3	HCM Level of Service	B
HCM Volume to Capacity ratio	0.57		
Actuated Cycle Length (s)	150.0	Sum of lost time (s)	12.0
Intersection Capacity Utilization	68.3%	ICU Level of Service	C
Analysis Period (min)	15		
c Critical Lane Group			

Movement	EBL	EBT	EBR	WBL	WBT	WBR	NBL	NBT	NBR	SBL	SBT	SBR
Lane Configurations												
Volume (vph)	210	481	140	621	324	105	164	1230	349	62	1962	131
Ideal Flow (vphpl)	1900	1900	1900	1900	1900	1900	1900	1900	1900	1900	1900	1900
Total Lost time (s)	6.0	6.0		6.0	6.0	6.0	6.0	6.0	6.0	6.0	6.0	
Lane Util. Factor	0.97	0.95		0.97	0.95	1.00	1.00	0.91	1.00	1.00	0.91	
Frt	1.00	0.97		1.00	1.00	0.85	1.00	1.00	0.85	1.00	0.99	
Flt Protected	0.95	1.00		0.95	1.00	1.00	0.95	1.00	1.00	0.95	1.00	
Satd. Flow (prot)	3433	3420		3433	3539	1583	1770	5085	1583	1770	5038	
Flt Permitted	0.95	1.00		0.95	1.00	1.00	0.07	1.00	1.00	0.18	1.00	
Satd. Flow (perm)	3433	3420		3433	3539	1583	131	5085	1583	330	5038	
Peak-hour factor, PHF	0.97	0.97	0.97	0.97	0.97	0.97	0.97	0.97	0.97	0.97	0.97	0.97
Adj. Flow (vph)	216	496	144	640	334	108	169	1268	360	64	2023	135
RTOR Reduction (vph)	0	0	0	0	0	20	0	0	202	0	0	0
Lane Group Flow (vph)	216	640	0	640	334	88	169	1268	158	64	2158	0
Turn Type	Prot			Prot		pm+ov	pm+pt		Perm	pm+pt		
Protected Phases	7	4		3	8	1	5	2		1	6	
Permitted Phases						8	2		2	6		
Actuated Green, G (s)	13.7	27.0		27.0	40.3	46.3	66.0	66.0	66.0	63.0	63.0	
Effective Green, g (s)	13.7	27.0		27.0	40.3	46.3	66.0	66.0	66.0	63.0	63.0	
Actuated g/C Ratio	0.09	0.18		0.18	0.27	0.31	0.44	0.44	0.44	0.42	0.42	
Clearance Time (s)	6.0	6.0		6.0	6.0	6.0	6.0	6.0	6.0	6.0	6.0	
Vehicle Extension (s)	3.0	3.0		3.0	3.0	3.0	3.0	3.0	3.0	3.0	3.0	
Lane Grp Cap (vph)	314	616		618	951	489	156	2237	697	196	2116	
v/s Ratio Prot	0.06	c0.19		c0.19	0.09	0.01	c0.07	0.25		0.01	c0.43	
v/s Ratio Perm						0.05	c0.41		0.10	0.12		
v/c Ratio	0.69	1.04		1.04	0.35	0.18	1.08	0.57	0.23	0.33	1.02	
Uniform Delay, d1	66.1	61.5		61.5	44.3	38.0	72.7	31.3	26.1	36.2	43.5	
Progression Factor	1.00	1.00		1.00	1.00	1.00	1.76	0.51	0.00	1.04	0.86	
Incremental Delay, d2	6.1	46.8		45.7	0.2	0.2	92.9	1.0	0.7	0.8	23.2	
Delay (s)	72.2	108.3		107.2	44.5	38.1	220.8	17.0	0.7	38.7	60.5	
Level of Service	E	F		F	D	D	F	B	A	D	E	
Approach Delay (s)		99.2			81.0			32.9			59.8	
Approach LOS		F			F			C			E	

Intersection Summary			
HCM Average Control Delay	61.2	HCM Level of Service	E
HCM Volume to Capacity ratio	1.01		
Actuated Cycle Length (s)	150.0	Sum of lost time (s)	18.0
Intersection Capacity Utilization	105.4%	ICU Level of Service	G
Analysis Period (min)	15		
c Critical Lane Group			

Movement	EBL	EBT	EBR	WBL	WBT	WBR	NBL	NBT	NBR	SBL	SBT	SBR
Lane Configurations												
Volume (vph)	0	0	0	123	12	394	212	1393	0	0	1982	778
Ideal Flow (vphpl)	1900	1900	1900	1900	1900	1900	1900	1900	1900	1900	1900	1900
Total Lost time (s)				6.0	6.0	6.0	6.0	6.0			6.0	6.0
Lane Util. Factor				0.95	0.95	1.00	0.97	0.86			0.81	1.00
Frt				1.00	1.00	0.85	1.00	1.00			1.00	0.85
Flt Protected				0.95	0.96	1.00	0.95	1.00			1.00	1.00
Satd. Flow (prot)				1681	1699	1583	3433	6408			7544	1583
Flt Permitted				0.95	0.96	1.00	0.95	1.00			1.00	1.00
Satd. Flow (perm)				1681	1699	1583	3433	6408			7544	1583
Peak-hour factor, PHF	0.96	0.96	0.96	0.96	0.96	0.96	0.96	0.96	0.96	0.96	0.96	0.96
Adj. Flow (vph)	0	0	0	128	12	410	221	1451	0	0	2065	810
RTOR Reduction (vph)	0	0	0	0	0	31	0	0	0	0	0	360
Lane Group Flow (vph)	0	0	0	69	71	379	221	1451	0	0	2065	450
Turn Type				Perm		Perm	Prot					Perm
Protected Phases					8		5	2			6	
Permitted Phases				8		8						6
Actuated Green, G (s)				40.3	40.3	40.3	15.0	97.7			76.7	76.7
Effective Green, g (s)				40.3	40.3	40.3	15.0	97.7			76.7	76.7
Actuated g/C Ratio				0.27	0.27	0.27	0.10	0.65			0.51	0.51
Clearance Time (s)				6.0	6.0	6.0	6.0	6.0			6.0	6.0
Vehicle Extension (s)				3.0	3.0	3.0	3.0	3.0			3.0	3.0
Lane Grp Cap (vph)				452	456	425	343	4174			3857	809
v/s Ratio Prot							c0.06	0.23			0.27	
v/s Ratio Perm				0.04	0.04	c0.24						c0.28
v/c Ratio				0.15	0.16	0.89	0.64	0.35			0.54	0.56
Uniform Delay, d1				41.8	41.9	52.8	64.9	11.8			24.7	25.0
Progression Factor				1.00	1.00	1.00	0.85	0.55			0.47	0.52
Incremental Delay, d2				0.2	0.2	20.4	4.0	0.2			0.1	0.6
Delay (s)				42.0	42.0	73.1	59.0	6.7			11.7	13.6
Level of Service				D	D	E	E	A			B	B
Approach Delay (s)		0.0			65.2			13.6			12.2	
Approach LOS		A			E			B			B	

Intersection Summary			
HCM Average Control Delay	18.4	HCM Level of Service	B
HCM Volume to Capacity ratio	0.67		
Actuated Cycle Length (s)	150.0	Sum of lost time (s)	18.0
Intersection Capacity Utilization	72.9%	ICU Level of Service	C
Analysis Period (min)	15		
c Critical Lane Group			

Movement	EBL	EBT	EBR	WBL	WBT	WBR	NBL	NBT	NBR	SBL	SBT	SBR
Lane Configurations												
Volume (vph)	261	0	441	0	0	0	0	1287	126	224	2075	0
Ideal Flow (vphpl)	1900	1900	1900	1900	1900	1900	1900	1900	1900	1900	1900	1900
Total Lost time (s)	6.0		6.0					6.0		6.0	6.0	
Lane Util. Factor	0.97		0.88					0.76		0.97	0.91	
Frt	1.00		0.85					0.99		1.00	1.00	
Flt Protected	0.95		1.00					1.00		0.95	1.00	
Satd. Flow (prot)	3433		2787					8381		3433	5085	
Flt Permitted	0.95		1.00					1.00		0.95	1.00	
Satd. Flow (perm)	3433		2787					8381		3433	5085	
Peak-hour factor, PHF	0.96	0.96	0.96	0.96	0.96	0.96	0.96	0.96	0.96	0.96	0.96	0.96
Adj. Flow (vph)	272	0	459	0	0	0	0	1341	131	233	2161	0
RTOR Reduction (vph)	0	0	14	0	0	0	0	10	0	0	0	0
Lane Group Flow (vph)	272	0	445	0	0	0	0	1462	0	233	2161	0
Turn Type	custom		custom							Prot		
Protected Phases								2		1	6	
Permitted Phases	4		4									
Actuated Green, G (s)	30.2		30.2					81.8		20.0	107.8	
Effective Green, g (s)	30.2		30.2					81.8		20.0	107.8	
Actuated g/C Ratio	0.20		0.20					0.55		0.13	0.72	
Clearance Time (s)	6.0		6.0					6.0		6.0	6.0	
Vehicle Extension (s)	3.0		3.0					3.0		3.0	3.0	
Lane Grp Cap (vph)	691		561					4570		458	3654	
v/s Ratio Prot								0.17		0.07	c0.42	
v/s Ratio Perm	0.08		c0.16									
v/c Ratio	0.39		0.79					0.32		0.51	0.59	
Uniform Delay, d1	52.0		56.9					18.8		60.4	10.3	
Progression Factor	1.00		1.00					1.00		0.59	0.38	
Incremental Delay, d2	0.4		7.6					0.2		0.8	0.6	
Delay (s)	52.3		64.6					19.0		36.3	4.5	
Level of Service	D		E					B		D	A	
Approach Delay (s)		60.0			0.0			19.0			7.6	
Approach LOS		E			A			B			A	

Intersection Summary			
HCM Average Control Delay	19.6	HCM Level of Service	B
HCM Volume to Capacity ratio	0.64		
Actuated Cycle Length (s)	150.0	Sum of lost time (s)	12.0
Intersection Capacity Utilization	72.9%	ICU Level of Service	C
Analysis Period (min)	15		
c Critical Lane Group			

Movement	EBL	EBT	EBR	WBL	WBT	WBR	NBL	NBT	NBR	SBL	SBT	SBR
Lane Configurations												
Volume (vph)	60	15	15	5	0	10	25	1180	80	40	2170	90
Ideal Flow (vphpl)	1900	1900	1900	1900	1900	1900	1900	1900	1900	1900	1900	1900
Total Lost time (s)		6.0	6.0		6.0		6.0	6.0		6.0	6.0	
Lane Util. Factor		1.00	1.00		1.00		1.00	0.86		1.00	0.86	
Frt		1.00	0.85		0.91		1.00	0.99		1.00	0.99	
Flt Protected		0.96	1.00		0.98		0.95	1.00		0.95	1.00	
Satd. Flow (prot)		1791	1583		1664		1770	6347		1770	6369	
Flt Permitted		0.76	1.00		0.90		0.95	1.00		0.95	1.00	
Satd. Flow (perm)		1413	1583		1528		1770	6347		1770	6369	
Peak-hour factor, PHF	0.95	0.95	0.95	0.95	0.95	0.95	0.95	0.95	0.95	0.95	0.95	0.95
Adj. Flow (vph)	63	16	16	5	0	11	26	1242	84	42	2284	95
RTOR Reduction (vph)	0	0	0	0	0	0	0	4	0	0	2	0
Lane Group Flow (vph)	0	79	16	0	16	0	26	1322	0	42	2377	0
Turn Type	Perm		Perm	Perm			Prot			Prot		
Protected Phases		4			8		5	2		1	6	
Permitted Phases	4		4	8								
Actuated Green, G (s)		13.7	13.7		13.7		5.3	110.5		7.8	113.0	
Effective Green, g (s)		13.7	13.7		13.7		5.3	110.5		7.8	113.0	
Actuated g/C Ratio		0.09	0.09		0.09		0.04	0.74		0.05	0.75	
Clearance Time (s)		6.0	6.0		6.0		6.0	6.0		6.0	6.0	
Vehicle Extension (s)		3.0	3.0		3.0		3.0	3.0		3.0	3.0	
Lane Grp Cap (vph)		129	145		140		63	4676		92	4798	
v/s Ratio Prot							0.01	c0.21		0.02	c0.37	
v/s Ratio Perm		c0.06	0.01		0.01							
v/c Ratio		0.61	0.11		0.11		0.41	0.28		0.46	0.50	
Uniform Delay, d1		65.6	62.6		62.6		70.8	6.6		69.0	7.3	
Progression Factor		1.00	1.00		1.00		0.71	0.58		0.85	1.14	
Incremental Delay, d2		8.3	0.3		0.4		3.9	0.1		3.0	0.3	
Delay (s)		73.9	62.9		62.9		53.9	3.9		61.4	8.6	
Level of Service		E	E		E		D	A		E	A	
Approach Delay (s)		72.1			62.9			4.9			9.6	
Approach LOS		E			E			A			A	

Intersection Summary			
HCM Average Control Delay	9.7	HCM Level of Service	A
HCM Volume to Capacity ratio	0.48		
Actuated Cycle Length (s)	150.0	Sum of lost time (s)	12.0
Intersection Capacity Utilization	54.6%	ICU Level of Service	A
Analysis Period (min)	15		
c Critical Lane Group			

HCM Signalized Intersection Capacity Analysis
1: Rollins Ave & MD 355

4/7/2014

Movement	EBL	EBT	EBR	WBL	WBT	WBR	NBL	NBT	NBR	SBL	SBT	SBR
Lane Configurations												
Volume (vph)	0	409	59	0	338	201	106	1783	176	240	1551	48
Ideal Flow (vphpl)	1900	1900	1900	1900	1900	1900	1900	1900	1900	1900	1900	1900
Total Lost time (s)		6.0			6.0		6.0	6.0	6.0	6.0	6.0	
Lane Util. Factor		0.95			0.95		1.00	0.91	1.00	1.00	0.91	
Frt		0.98			0.94		1.00	1.00	0.85	1.00	1.00	
Flt Protected		1.00			1.00		0.95	1.00	1.00	0.95	1.00	
Satd. Flow (prot)		3472			3341		1770	5085	1583	1770	5062	
Flt Permitted		1.00			1.00		0.10	1.00	1.00	0.05	1.00	
Satd. Flow (perm)		3472			3341		180	5085	1583	93	5062	
Peak-hour factor, PHF	0.92	0.92	0.92	0.81	0.81	0.81	0.92	0.92	0.92	0.98	0.98	0.98
Adj. Flow (vph)	0	445	64	0	417	248	115	1938	191	245	1583	49
RTOR Reduction (vph)	0	0	0	0	0	0	0	0	66	0	2	0
Lane Group Flow (vph)	0	509	0	0	665	0	115	1938	125	245	1630	0
Turn Type							pm+pt		Perm	pm+pt		
Protected Phases		4			8		5	2		1	6	
Permitted Phases							2		2	6		
Actuated Green, G (s)		35.1			35.1		83.9	76.6	76.6	102.9	89.6	
Effective Green, g (s)		35.1			35.1		83.9	76.6	76.6	102.9	89.6	
Actuated g/C Ratio		0.23			0.23		0.56	0.51	0.51	0.69	0.60	
Clearance Time (s)		6.0			6.0		6.0	6.0	6.0	6.0	6.0	
Vehicle Extension (s)		3.0			3.0		3.0	3.0	3.0	3.0	3.0	
Lane Grp Cap (vph)		812			782		178	2597	808	291	3024	
v/s Ratio Prot		0.15			c0.20		0.03	0.38		c0.11	0.32	
v/s Ratio Perm							0.33		0.08	c0.46		
v/c Ratio		0.63			0.85		0.65	0.75	0.15	0.84	0.54	
Uniform Delay, d1		51.6			54.9		43.2	29.0	19.5	43.7	17.9	
Progression Factor		1.00			1.00		1.53	0.86	0.76	1.00	1.00	
Incremental Delay, d2		1.5			8.8		5.6	1.4	0.3	19.3	0.7	
Delay (s)		53.1			63.7		71.6	26.3	15.1	63.0	18.6	
Level of Service		D			E		E	C	B	E	B	
Approach Delay (s)		53.1			63.7			27.7			24.4	
Approach LOS		D			E			C			C	

Intersection Summary			
HCM Average Control Delay	33.5	HCM Level of Service	C
HCM Volume to Capacity ratio	0.83		
Actuated Cycle Length (s)	150.0	Sum of lost time (s)	12.0
Intersection Capacity Utilization	78.5%	ICU Level of Service	D
Analysis Period (min)	15		
c Critical Lane Group			

Movement	EBL	EBT	EBR	WBL	WBT	WBR	NBL	NBT	NBR	SBL	SBT	SBR
Lane Configurations												
Volume (vph)	40	60	40	450	25	90	40	1935	400	140	1460	10
Ideal Flow (vphpl)	1900	1900	1900	1900	1900	1900	1900	1900	1900	1900	1900	1900
Total Lost time (s)		6.0	6.0	6.0	6.0		6.0	6.0	6.0	6.0	6.0	
Lane Util. Factor		1.00	1.00	0.97	1.00		1.00	0.91	1.00	1.00	0.91	
Frt		1.00	0.85	1.00	0.88		1.00	1.00	0.85	1.00	1.00	
Flt Protected		0.98	1.00	0.95	1.00		0.95	1.00	1.00	0.95	1.00	
Satd. Flow (prot)		1826	1583	3433	1643		1770	5085	1583	1770	5080	
Flt Permitted		0.98	1.00	0.95	1.00		0.95	1.00	1.00	0.06	1.00	
Satd. Flow (perm)		1826	1583	3433	1643		1770	5085	1583	119	5080	
Peak-hour factor, PHF	0.95	0.95	0.95	0.95	0.95	0.95	0.95	0.95	0.95	0.95	0.95	0.95
Adj. Flow (vph)	42	63	42	474	26	95	42	2037	421	147	1537	11
RTOR Reduction (vph)	0	0	40	0	81	0	0	0	148	0	0	0
Lane Group Flow (vph)	0	105	2	474	40	0	42	2037	273	147	1548	0
Turn Type	Split		Perm	Split			Prot		Perm	pm+pt		
Protected Phases	4	4		8	8		5	2		1	6	
Permitted Phases			4						2	6		
Actuated Green, G (s)		7.0	7.0	22.6	22.6		14.4	83.4	83.4	82.0	82.0	
Effective Green, g (s)		7.0	7.0	22.6	22.6		14.4	83.4	83.4	82.0	82.0	
Actuated g/C Ratio		0.05	0.05	0.15	0.15		0.10	0.56	0.56	0.55	0.55	
Clearance Time (s)		6.0	6.0	6.0	6.0		6.0	6.0	6.0	6.0	6.0	
Vehicle Extension (s)		3.0	3.0	3.0	3.0		3.0	3.0	3.0	3.0	3.0	
Lane Grp Cap (vph)		85	74	517	248		170	2827	880	208	2777	
v/s Ratio Prot		c0.06		c0.14	0.02		0.02	c0.40		c0.06	0.30	
v/s Ratio Perm			0.00						0.17	0.33		
v/c Ratio		1.24	0.03	0.92	0.16		0.25	0.72	0.31	0.71	0.56	
Uniform Delay, d1		71.5	68.2	62.8	55.5		62.8	24.7	17.9	42.7	22.2	
Progression Factor		1.00	1.00	1.00	1.00		0.87	1.34	2.79	0.68	0.75	
Incremental Delay, d2		173.7	0.1	21.0	0.3		2.4	1.1	0.6	16.0	0.7	
Delay (s)		245.2	68.4	83.8	55.8		56.9	34.2	50.5	44.9	17.2	
Level of Service		F	E	F	E		E	C	D	D	B	
Approach Delay (s)		194.7			78.1			37.3			19.6	
Approach LOS		F			E			D			B	

Intersection Summary			
HCM Average Control Delay	40.9	HCM Level of Service	D
HCM Volume to Capacity ratio	0.75		
Actuated Cycle Length (s)	150.0	Sum of lost time (s)	18.0
Intersection Capacity Utilization	79.6%	ICU Level of Service	D
Analysis Period (min)	15		
c Critical Lane Group			

Movement	EBL	EBT	EBR	WBL	WBT	WBR	NBL	NBT	NBR	SBL	SBT	SBR
Lane Configurations												
Volume (vph)	55	20	50	175	5	90	20	2230	190	115	1825	10
Ideal Flow (vphpl)	1900	1900	1900	1900	1900	1900	1900	1900	1900	1900	1900	1900
Total Lost time (s)	6.0	6.0		6.0	6.0		6.0	6.0	6.0	6.0	6.0	
Lane Util. Factor	1.00	1.00		1.00	1.00		1.00	0.91	1.00	1.00	0.91	
Frt	1.00	0.89		1.00	0.86		1.00	1.00	0.85	1.00	1.00	
Flt Protected	0.95	1.00		0.95	1.00		0.95	1.00	1.00	0.95	1.00	
Satd. Flow (prot)	1770	1663		1770	1597		1770	5085	1583	1770	5081	
Flt Permitted	0.65	1.00		0.71	1.00		0.95	1.00	1.00	0.95	1.00	
Satd. Flow (perm)	1214	1663		1320	1597		1770	5085	1583	1770	5081	
Peak-hour factor, PHF	0.95	0.95	0.95	0.95	0.95	0.95	0.95	0.95	0.95	0.95	0.95	0.95
Adj. Flow (vph)	58	21	53	184	5	95	21	2347	200	121	1921	11
RTOR Reduction (vph)	0	44	0	0	76	0	0	0	61	0	0	0
Lane Group Flow (vph)	58	30	0	184	24	0	21	2347	139	121	1932	0
Turn Type	Perm			Perm			Prot		Perm	Prot		
Protected Phases		4			8		5	2		1	6	
Permitted Phases	4			8					2			
Actuated Green, G (s)	24.1	24.1		24.1	24.1		4.2	94.3	94.3	13.6	103.7	
Effective Green, g (s)	24.1	24.1		24.1	24.1		4.2	94.3	94.3	13.6	103.7	
Actuated g/C Ratio	0.16	0.16		0.16	0.16		0.03	0.63	0.63	0.09	0.69	
Clearance Time (s)	6.0	6.0		6.0	6.0		6.0	6.0	6.0	6.0	6.0	
Vehicle Extension (s)	3.0	3.0		3.0	3.0		3.0	3.0	3.0	3.0	3.0	
Lane Grp Cap (vph)	195	267		212	257		50	3197	995	160	3513	
v/s Ratio Prot		0.02			0.01		0.01	c0.46		c0.07	0.38	
v/s Ratio Perm	0.05			c0.14					0.09			
v/c Ratio	0.30	0.11		0.87	0.09		0.42	0.73	0.14	0.76	0.55	
Uniform Delay, d1	55.5	53.8		61.4	53.6		71.7	19.2	11.3	66.6	11.5	
Progression Factor	1.00	1.00		1.00	1.00		1.05	0.84	0.86	0.93	0.99	
Incremental Delay, d2	0.9	0.2		29.1	0.2		5.0	1.4	0.3	14.5	0.5	
Delay (s)	56.3	54.0		90.5	53.8		80.2	17.5	10.0	76.6	11.9	
Level of Service	E	D		F	D		F	B	A	E	B	
Approach Delay (s)		55.0			77.6			17.4			15.7	
Approach LOS		E			E			B			B	

Intersection Summary			
HCM Average Control Delay	21.1	HCM Level of Service	C
HCM Volume to Capacity ratio	0.76		
Actuated Cycle Length (s)	150.0	Sum of lost time (s)	18.0
Intersection Capacity Utilization	80.8%	ICU Level of Service	D
Analysis Period (min)	15		
c Critical Lane Group			

Intersection Sign configuration not allowed in HCM analysis.

Movement	EBL	EBT	EBR	WBL	WBT	WBR	NBL	NBT	NBR	SBL	SBT	SBR
Lane Configurations												
Volume (vph)	145	940	0	0	880	170	100	0	375	0	0	0
Ideal Flow (vphpl)	1900	1900	1900	1900	1900	1900	1900	1900	1900	1900	1900	1900
Lane Width	11	11	11	11	11	11	11	11	11	11	11	11
Total Lost time (s)	6.0	6.0			6.0	6.0		6.0	6.0			
Lane Util. Factor	0.97	0.95			0.95	1.00		1.00	0.88			
Frt	1.00	1.00			1.00	0.85		1.00	0.85			
Flt Protected	0.95	1.00			1.00	1.00		0.95	1.00			
Satd. Flow (prot)	3319	3421			3421	1531		1711	2694			
Flt Permitted	0.95	1.00			1.00	1.00		0.95	1.00			
Satd. Flow (perm)	3319	3421			3421	1531		1711	2694			
Peak-hour factor, PHF	0.92	0.92	0.92	0.92	0.92	0.92	0.92	0.92	0.92	0.92	0.92	0.92
Adj. Flow (vph)	158	1022	0	0	957	185	109	0	408	0	0	0
RTOR Reduction (vph)	0	0	0	0	0	105	0	0	239	0	0	0
Lane Group Flow (vph)	158	1022	0	0	957	80	0	109	169	0	0	0
Turn Type	Prot					Perm	Split		Prot			
Protected Phases	1	6			2		4	4	4			
Permitted Phases						2						
Actuated Green, G (s)	51.6	122.6			65.0	65.0		15.4	15.4			
Effective Green, g (s)	51.6	122.6			65.0	65.0		15.4	15.4			
Actuated g/C Ratio	0.34	0.82			0.43	0.43		0.10	0.10			
Clearance Time (s)	6.0	6.0			6.0	6.0		6.0	6.0			
Vehicle Extension (s)	3.0	3.0			3.0	3.0		3.0	3.0			
Lane Grp Cap (vph)	1142	2796			1482	663		176	277			
v/s Ratio Prot	0.05	c0.30			c0.28			c0.06	0.06			
v/s Ratio Perm						0.05						
v/c Ratio	0.14	0.37			0.65	0.12		0.62	0.61			
Uniform Delay, d1	33.9	3.6			33.4	25.4		64.5	64.4			
Progression Factor	1.40	1.11			0.37	0.00		1.06	1.52			
Incremental Delay, d2	0.1	0.3			1.9	0.3		5.5	3.4			
Delay (s)	47.5	4.3			14.4	0.4		73.7	101.6			
Level of Service	D	A			B	A		E	F			
Approach Delay (s)		10.1			12.1			95.7			0.0	
Approach LOS		B			B			F			A	

Intersection Summary			
HCM Average Control Delay	26.5	HCM Level of Service	C
HCM Volume to Capacity ratio	0.52		
Actuated Cycle Length (s)	150.0	Sum of lost time (s)	12.0
Intersection Capacity Utilization	49.1%	ICU Level of Service	A
Analysis Period (min)	15		

c Critical Lane Group

Movement	EBL	EBT	EBR	WBL	WBT	WBR	NBL	NBT	NBR	SBL	SBT	SBR
Lane Configurations												
Volume (vph)	675	150	225	100	150	70	190	1705	65	105	1305	460
Ideal Flow (vphpl)	1900	1900	1900	1900	1900	1900	1900	1900	1900	1900	1900	1900
Total Lost time (s)	6.0	6.0	6.0	6.0	6.0	6.0	6.0	6.0		6.0	6.0	6.0
Lane Util. Factor	0.91	0.91	1.00	1.00	1.00	1.00	1.00	0.91		1.00	0.91	1.00
Frt	1.00	1.00	0.85	1.00	1.00	0.85	1.00	0.99		1.00	1.00	0.85
Flt Protected	0.95	0.98	1.00	0.95	1.00	1.00	0.95	1.00		0.95	1.00	1.00
Satd. Flow (prot)	3221	1657	1583	1770	1863	1583	1770	5057		1770	5085	1583
Flt Permitted	0.95	0.98	1.00	0.95	1.00	1.00	0.95	1.00		0.07	1.00	1.00
Satd. Flow (perm)	3221	1657	1583	1770	1863	1583	1770	5057		130	5085	1583
Peak-hour factor, PHF	0.95	0.95	0.95	0.95	0.95	0.95	0.95	0.95	0.95	0.95	0.95	0.95
Adj. Flow (vph)	711	158	237	105	158	74	200	1795	68	111	1374	484
RTOR Reduction (vph)	0	0	187	0	0	66	0	3	0	0	0	238
Lane Group Flow (vph)	576	293	50	105	158	8	200	1860	0	111	1374	246
Turn Type	Split		Perm	Split		Perm	Prot			pm+pt		Perm
Protected Phases	4	4		8	8		5	2		1	6	
Permitted Phases			4			8				6		6
Actuated Green, G (s)	31.9	31.9	31.9	16.3	16.3	16.3	20.6	69.0		66.0	57.2	57.2
Effective Green, g (s)	31.9	31.9	31.9	16.3	16.3	16.3	20.6	69.0		66.0	57.2	57.2
Actuated g/C Ratio	0.21	0.21	0.21	0.11	0.11	0.11	0.14	0.46		0.44	0.38	0.38
Clearance Time (s)	6.0	6.0	6.0	6.0	6.0	6.0	6.0	6.0		6.0	6.0	6.0
Vehicle Extension (s)	3.0	3.0	3.0	3.0	3.0	3.0	3.0	3.0		3.0	3.0	3.0
Lane Grp Cap (vph)	685	352	337	192	202	172	243	2326		153	1939	604
v/s Ratio Prot	c0.18	0.18		0.06	c0.08		c0.11	c0.37		0.04	0.27	
v/s Ratio Perm			0.03			0.01				0.28		0.16
v/c Ratio	0.84	0.83	0.15	0.55	0.78	0.05	0.82	0.80		0.73	0.71	0.41
Uniform Delay, d1	56.6	56.5	48.0	63.4	65.1	59.9	62.9	34.6		30.5	39.3	34.0
Progression Factor	1.33	1.33	4.64	0.98	0.98	1.01	0.75	1.06		1.01	0.79	0.92
Incremental Delay, d2	9.0	15.1	0.2	3.1	17.4	0.1	16.7	2.5		14.5	2.0	1.9
Delay (s)	84.4	90.1	222.8	65.3	81.5	60.5	64.0	39.1		45.4	33.2	33.1
Level of Service	F	F	F	E	F	E	E	D		D	C	C
Approach Delay (s)		115.6			71.8			41.5			33.8	
Approach LOS		F			E			D			C	

Intersection Summary			
HCM Average Control Delay	55.6	HCM Level of Service	E
HCM Volume to Capacity ratio	0.83		
Actuated Cycle Length (s)	150.0	Sum of lost time (s)	24.0
Intersection Capacity Utilization	83.2%	ICU Level of Service	E
Analysis Period (min)	15		
c Critical Lane Group			

Movement	EBL	EBT	EBR	WBL	WBT	WBR	NBL	NBT	NBR	SBL	SBT	SBR
Lane Configurations												
Volume (vph)	125	130	175	150	245	130	75	1705	60	80	1460	90
Ideal Flow (vphpl)	1900	1900	1900	1900	1900	1900	1900	1900	1900	1900	1900	1900
Total Lost time (s)	6.0	6.0		6.0	6.0	6.0	6.0	6.0	6.0	6.0	6.0	6.0
Lane Util. Factor	1.00	0.95		1.00	0.95	1.00	1.00	0.91	1.00	1.00	0.91	1.00
Frt	1.00	0.91		1.00	1.00	0.85	1.00	1.00	0.85	1.00	1.00	0.85
Flt Protected	0.95	1.00		0.95	1.00	1.00	0.95	1.00	1.00	0.95	1.00	1.00
Satd. Flow (prot)	1770	3235		1770	3539	1583	1770	5085	1583	1770	5085	1583
Flt Permitted	0.59	1.00		0.29	1.00	1.00	0.09	1.00	1.00	0.09	1.00	1.00
Satd. Flow (perm)	1103	3235		549	3539	1583	171	5085	1583	164	5085	1583
Peak-hour factor, PHF	0.95	0.95	0.95	0.95	0.95	0.95	0.95	0.95	0.95	0.95	0.95	0.95
Adj. Flow (vph)	132	137	184	158	258	137	79	1795	63	84	1537	95
RTOR Reduction (vph)	0	83	0	0	0	57	0	0	28	0	0	43
Lane Group Flow (vph)	132	238	0	158	258	80	79	1795	35	84	1537	52
Turn Type	Perm			pm+pt		Perm	pm+pt		Perm	pm+pt		Perm
Protected Phases		4		3	8		5	2		1	6	
Permitted Phases	4			8		8	2		2	6		6
Actuated Green, G (s)	22.1	22.1		42.3	42.3	42.3	82.6	82.6	82.6	82.2	82.2	82.2
Effective Green, g (s)	22.1	22.1		42.3	42.3	42.3	82.6	82.6	82.6	82.2	82.2	82.2
Actuated g/C Ratio	0.15	0.15		0.28	0.28	0.28	0.55	0.55	0.55	0.55	0.55	0.55
Clearance Time (s)	6.0	6.0		6.0	6.0	6.0	6.0	6.0	6.0	6.0	6.0	6.0
Vehicle Extension (s)	3.0	3.0		3.0	3.0	3.0	3.0	3.0	3.0	3.0	3.0	3.0
Lane Grp Cap (vph)	163	477		270	998	446	174	2800	872	166	2787	867
v/s Ratio Prot		0.07		c0.06	0.07		0.02	c0.35		0.02	c0.30	
v/s Ratio Perm	c0.12			0.11		0.05	0.23		0.02	0.25		0.03
v/c Ratio	0.81	0.50		0.59	0.26	0.18	0.45	0.64	0.04	0.51	0.55	0.06
Uniform Delay, d1	61.9	58.9		43.1	41.7	40.7	20.2	23.4	15.5	40.9	22.0	15.8
Progression Factor	0.99	0.99		1.00	1.00	1.00	1.31	1.17	3.38	1.10	1.59	4.05
Incremental Delay, d2	24.8	0.8		3.2	0.1	0.2	0.6	0.3	0.0	1.8	0.6	0.1
Delay (s)	86.2	59.1		46.4	41.8	40.9	27.1	27.6	52.3	46.9	35.5	64.2
Level of Service	F	E		D	D	D	C	C	D	D	D	E
Approach Delay (s)		67.0			42.9			28.4			37.6	
Approach LOS		E			D			C			D	

Intersection Summary			
HCM Average Control Delay	37.3	HCM Level of Service	D
HCM Volume to Capacity ratio	0.64		
Actuated Cycle Length (s)	150.0	Sum of lost time (s)	18.0
Intersection Capacity Utilization	74.9%	ICU Level of Service	D
Analysis Period (min)	15		
c Critical Lane Group			

Movement	EBL	EBT	EBR	WBL	WBT	WBR	NBL	NBT	NBR	SBL	SBT	SBR
Lane Configurations												
Volume (vph)	90	700	125	460	580	180	70	1570	560	240	1475	70
Ideal Flow (vphpl)	1900	1900	1900	1900	1900	1900	1900	1900	1900	1900	1900	1900
Total Lost time (s)		6.0	6.0	6.0	6.0	6.0	6.0	6.0	6.0	6.0	6.0	6.0
Lane Util. Factor		0.95	1.00	0.97	0.95	1.00	1.00	0.91	1.00	1.00	0.91	1.00
Frt		1.00	0.85	1.00	1.00	0.85	1.00	1.00	0.85	1.00	1.00	0.85
Flt Protected		0.99	1.00	0.95	1.00	1.00	0.95	1.00	1.00	0.95	1.00	1.00
Satd. Flow (prot)		3519	1583	3433	3539	1583	1770	5085	1583	1770	5085	1583
Flt Permitted		0.99	1.00	0.95	1.00	1.00	0.95	1.00	1.00	0.07	1.00	1.00
Satd. Flow (perm)		3519	1583	3433	3539	1583	1770	5085	1583	138	5085	1583
Peak-hour factor, PHF	0.95	0.95	0.95	0.95	0.95	0.95	0.95	0.95	0.95	0.95	0.95	0.95
Adj. Flow (vph)	95	737	132	484	611	189	74	1653	589	253	1553	74
RTOR Reduction (vph)	0	0	80	0	0	127	0	0	12	0	0	34
Lane Group Flow (vph)	0	832	52	484	611	62	74	1653	577	253	1553	40
Turn Type	Split		Perm	Split		Perm	Prot		pm+ov	pm+pt		Perm
Protected Phases	4	4		8	8		5	2	8	1	6	
Permitted Phases			4			8			2	6		6
Actuated Green, G (s)		33.0	33.0	29.9	29.9	29.9	8.7	48.0	77.9	69.1	54.4	54.4
Effective Green, g (s)		33.0	33.0	29.9	29.9	29.9	8.7	48.0	77.9	69.1	54.4	54.4
Actuated g/C Ratio		0.22	0.22	0.20	0.20	0.20	0.06	0.32	0.52	0.46	0.36	0.36
Clearance Time (s)		6.0	6.0	6.0	6.0	6.0	6.0	6.0	6.0	6.0	6.0	6.0
Vehicle Extension (s)		3.0	3.0	3.0	3.0	3.0	3.0	3.0	3.0	3.0	3.0	3.0
Lane Grp Cap (vph)		774	348	684	705	316	103	1627	822	228	1844	574
v/s Ratio Prot		c0.24		0.14	c0.17		0.04	0.33	0.14	c0.11	0.31	
v/s Ratio Perm			0.03			0.04			0.22	c0.40		0.03
v/c Ratio		1.07	0.15	0.71	0.87	0.20	0.72	1.02	0.70	1.11	0.84	0.07
Uniform Delay, d1		58.5	47.2	56.0	58.1	50.1	69.4	51.0	27.3	47.9	43.9	31.2
Progression Factor		1.20	1.80	0.90	0.91	1.95	0.75	1.36	2.24	1.15	1.09	1.31
Incremental Delay, d2		54.0	0.2	2.8	9.1	0.3	18.2	24.5	2.3	88.3	4.3	0.2
Delay (s)		124.3	85.1	53.3	62.0	97.6	70.1	94.0	63.5	143.4	51.9	41.1
Level of Service		F	F	D	E	F	E	F	E	F	D	D
Approach Delay (s)		118.9			64.0			85.4			63.8	
Approach LOS		F			E			F			E	

Intersection Summary			
HCM Average Control Delay	79.9	HCM Level of Service	E
HCM Volume to Capacity ratio	1.02		
Actuated Cycle Length (s)	150.0	Sum of lost time (s)	18.0
Intersection Capacity Utilization	101.6%	ICU Level of Service	G
Analysis Period (min)	15		
c Critical Lane Group			

Movement	EBL	EBT	EBR	WBL	WBT	WBR	NBL	NBT	NBR	SBL	SBT	SBR
Lane Configurations												
Volume (vph)	70	35	145	0	0	0	115	2130	130	130	1895	35
Ideal Flow (vphpl)	1900	1900	1900	1900	1900	1900	1900	1900	1900	1900	1900	1900
Total Lost time (s)		6.0	6.0				6.0	6.0		6.0	6.0	6.0
Lane Util. Factor		1.00	1.00				1.00	0.86		1.00	0.91	1.00
Frt		1.00	0.85				1.00	0.99		1.00	1.00	0.85
Flt Protected		0.97	1.00				0.95	1.00		0.95	1.00	1.00
Satd. Flow (prot)		1803	1583				1770	6352		1770	5085	1583
Flt Permitted		0.97	1.00				0.08	1.00		0.95	1.00	1.00
Satd. Flow (perm)		1803	1583				153	6352		1770	5085	1583
Peak-hour factor, PHF	0.95	0.95	0.95	0.95	0.95	0.95	0.95	0.95	0.95	0.95	0.95	0.95
Adj. Flow (vph)	74	37	153	0	0	0	121	2242	137	137	1995	37
RTOR Reduction (vph)	0	0	75	0	0	0	0	5	0	0	0	10
Lane Group Flow (vph)	0	111	78	0	0	0	121	2374	0	137	1995	27
Turn Type	Perm		Perm				pm+pt			Prot		Perm
Protected Phases		4					5	2		1	6	
Permitted Phases	4		4				2					6
Actuated Green, G (s)		14.5	14.5				108.8	99.7		17.8	108.4	108.4
Effective Green, g (s)		14.5	14.5				108.8	99.7		17.8	108.4	108.4
Actuated g/C Ratio		0.10	0.10				0.73	0.66		0.12	0.72	0.72
Clearance Time (s)		6.0	6.0				6.0	6.0		6.0	6.0	6.0
Vehicle Extension (s)		3.0	3.0				3.0	3.0		3.0	3.0	3.0
Lane Grp Cap (vph)		174	153				209	4222		210	3675	1144
v/s Ratio Prot							0.04	0.37		c0.08	0.39	
v/s Ratio Perm		0.06	0.05				c0.38					0.02
v/c Ratio		0.64	0.51				0.58	0.56		0.65	0.54	0.02
Uniform Delay, d1		65.2	64.4				8.0	13.5		63.1	9.5	5.9
Progression Factor		1.00	1.00				1.73	1.77		0.99	1.36	2.18
Incremental Delay, d2		7.5	2.7				3.1	0.4		4.3	0.3	0.0
Delay (s)		72.7	67.0				17.0	24.2		67.1	13.2	12.8
Level of Service		E	E				B	C		E	B	B
Approach Delay (s)		69.4			0.0			23.9			16.6	
Approach LOS		E			A			C			B	

Intersection Summary			
HCM Average Control Delay	23.1	HCM Level of Service	C
HCM Volume to Capacity ratio	0.60		
Actuated Cycle Length (s)	150.0	Sum of lost time (s)	18.0
Intersection Capacity Utilization	63.7%	ICU Level of Service	B
Analysis Period (min)	15		
c Critical Lane Group			

Movement	EBL	EBT	EBR	WBL	WBT	WBR	NBL	NBT	NBR	SBL	SBT	SBR
Lane Configurations												
Volume (vph)	200	0	350	305	0	50	120	2125	275	25	1895	120
Ideal Flow (vphpl)	1900	1900	1900	1900	1900	1900	1900	1900	1900	1900	1900	1900
Total Lost time (s)	6.0		6.0	6.0		6.0	6.0	6.0	6.0	6.0	6.0	
Lane Util. Factor	1.00		1.00	0.97		1.00	1.00	0.91	1.00	1.00	0.91	
Frt	1.00		0.85	1.00		0.85	1.00	1.00	0.85	1.00	0.99	
Flt Protected	0.95		1.00	0.95		1.00	0.95	1.00	1.00	0.95	1.00	
Satd. Flow (prot)	1770		1583	3433		1583	1770	5085	1583	1770	5040	
Flt Permitted	0.95		1.00	0.95		1.00	0.95	1.00	1.00	0.95	1.00	
Satd. Flow (perm)	1770		1583	3433		1583	1770	5085	1583	1770	5040	
Peak-hour factor, PHF	0.95	0.95	0.95	0.95	0.95	0.95	0.95	0.95	0.95	0.95	0.95	0.95
Adj. Flow (vph)	211	0	368	321	0	53	126	2237	289	26	1995	126
RTOR Reduction (vph)	0	0	5	0	0	45	0	0	88	0	4	0
Lane Group Flow (vph)	211	0	363	321	0	8	126	2237	201	26	2117	0
Turn Type	custom		custom	custom		custom	Prot		Perm	Prot		
Protected Phases			5				5	2		1	6	
Permitted Phases	4		4	8		8			2			
Actuated Green, G (s)	22.7		38.4	22.7		22.7	15.7	104.2	104.2	5.1	93.6	
Effective Green, g (s)	22.7		38.4	22.7		22.7	15.7	104.2	104.2	5.1	93.6	
Actuated g/C Ratio	0.15		0.26	0.15		0.15	0.10	0.69	0.69	0.03	0.62	
Clearance Time (s)	6.0		6.0	6.0		6.0	6.0	6.0	6.0	6.0	6.0	
Vehicle Extension (s)	3.0		3.0	3.0		3.0	3.0	3.0	3.0	3.0	3.0	
Lane Grp Cap (vph)	268		469	520		240	185	3532	1100	60	3145	
v/s Ratio Prot			c0.08				0.07	0.44		0.01	c0.42	
v/s Ratio Perm	0.12		0.15	0.09		0.01			0.13			
v/c Ratio	0.79		0.77	0.62		0.03	0.68	0.63	0.18	0.43	0.67	
Uniform Delay, d1	61.3		51.8	59.6		54.3	64.7	12.5	8.0	71.0	18.3	
Progression Factor	1.00		1.00	1.00		1.00	0.77	2.32	8.17	0.89	0.46	
Incremental Delay, d2	14.1		7.8	2.2		0.1	4.0	0.3	0.1	4.2	1.0	
Delay (s)	75.4		59.5	61.8		54.3	53.6	29.3	65.6	67.7	9.4	
Level of Service	E		E	E		D	D	C	E	E	A	
Approach Delay (s)		65.3			60.7			34.4			10.2	
Approach LOS		E			E			C			B	

Intersection Summary			
HCM Average Control Delay	30.2	HCM Level of Service	C
HCM Volume to Capacity ratio	0.71		
Actuated Cycle Length (s)	150.0	Sum of lost time (s)	12.0
Intersection Capacity Utilization	83.0%	ICU Level of Service	E
Analysis Period (min)	15		
c Critical Lane Group			

Movement	EBL	EBT	EBR	WBL	WBT	WBR	NBL	NBT	NBR	SBL	SBT	SBR
Lane Configurations												
Volume (vph)	34	27	55	301	14	255	30	2231	603	258	2256	36
Ideal Flow (vphpl)	1900	1900	1900	1900	1900	1900	1900	1900	1900	1900	1900	1900
Total Lost time (s)		6.0	6.0	6.0	6.0	6.0	6.0	6.0	6.0	6.0	6.0	
Lane Util. Factor		1.00	1.00	0.95	0.95	1.00	1.00	0.91	1.00	1.00	0.91	
Frt		1.00	0.85	1.00	1.00	0.85	1.00	1.00	0.85	1.00	1.00	
Flt Protected		0.97	1.00	0.95	0.96	1.00	0.95	1.00	1.00	0.95	1.00	
Satd. Flow (prot)		1813	1583	1681	1692	1583	1770	5085	1583	1770	5073	
Flt Permitted		0.97	1.00	0.95	0.96	1.00	0.06	1.00	1.00	0.06	1.00	
Satd. Flow (perm)		1813	1583	1681	1692	1583	106	5085	1583	106	5073	
Peak-hour factor, PHF	0.94	0.94	0.94	0.87	0.87	0.87	0.95	0.95	0.95	0.89	0.89	0.89
Adj. Flow (vph)	36	29	59	346	16	293	32	2348	635	290	2535	40
RTOR Reduction (vph)	0	0	43	0	0	190	0	0	317	0	0	0
Lane Group Flow (vph)	0	65	16	180	182	103	32	2348	318	290	2575	0
Turn Type	Split		Perm	Split		Perm	pm+pt		Perm	pm+pt		
Protected Phases	4	4		8	8		5	2		1	6	
Permitted Phases			4			8	2		2	6		
Actuated Green, G (s)		11.7	11.7	19.3	19.3	19.3	73.4	73.4	73.4	91.8	91.8	
Effective Green, g (s)		11.7	11.7	19.3	19.3	19.3	73.4	73.4	73.4	91.8	91.8	
Actuated g/C Ratio		0.08	0.08	0.13	0.13	0.13	0.49	0.49	0.49	0.61	0.61	
Clearance Time (s)		6.0	6.0	6.0	6.0	6.0	6.0	6.0	6.0	6.0	6.0	
Vehicle Extension (s)		3.0	3.0	3.0	3.0	3.0	3.0	3.0	3.0	3.0	3.0	
Lane Grp Cap (vph)		141	123	216	218	204	87	2488	775	304	3105	
v/s Ratio Prot		c0.04		0.11	c0.11		0.01	c0.46		0.14	c0.51	
v/s Ratio Perm			0.01			0.07	0.17		0.20	0.45		
v/c Ratio		0.46	0.13	0.83	0.83	0.51	0.37	0.94	0.41	0.95	0.83	
Uniform Delay, d1		66.1	64.4	63.8	63.8	60.9	46.1	36.3	24.5	51.9	22.9	
Progression Factor		1.00	1.00	1.00	1.00	1.00	0.93	0.83	2.12	1.28	0.80	
Incremental Delay, d2		2.4	0.5	23.2	23.2	2.0	0.8	3.3	0.5	33.9	2.2	
Delay (s)		68.5	64.9	87.0	87.0	62.9	43.6	33.3	52.4	100.2	20.4	
Level of Service		E	E	F	F	E	D	C	D	F	C	
Approach Delay (s)		66.8			76.2			37.4			28.5	
Approach LOS		E			E			D			C	

Intersection Summary			
HCM Average Control Delay	38.0	HCM Level of Service	D
HCM Volume to Capacity ratio	0.89		
Actuated Cycle Length (s)	150.0	Sum of lost time (s)	24.0
Intersection Capacity Utilization	87.8%	ICU Level of Service	E
Analysis Period (min)	15		
c Critical Lane Group			

Movement	EBL	EBT	EBR	WBL	WBT	WBR	NBL	NBT	NBR	SBL	SBT	SBR
Lane Configurations												
Volume (vph)	478	211	176	43	327	310	209	2076	30	189	2021	402
Ideal Flow (vphpl)	1900	1900	1900	1900	1900	1900	1900	1900	1900	1900	1900	1900
Total Lost time (s)	6.0	6.0	6.0	6.0	6.0	6.0	6.0	6.0		6.0	6.0	6.0
Lane Util. Factor	0.91	0.91	1.00	0.91	0.91	1.00	1.00	0.91		1.00	0.91	1.00
Frt	1.00	1.00	0.85	1.00	1.00	0.85	1.00	1.00		1.00	1.00	0.85
Flt Protected	0.95	0.97	1.00	0.95	1.00	1.00	0.95	1.00		0.95	1.00	1.00
Satd. Flow (prot)	1610	3302	1583	1610	3388	1583	1770	5074		1770	5085	1583
Flt Permitted	0.95	0.97	1.00	0.95	1.00	1.00	0.95	1.00		0.06	1.00	1.00
Satd. Flow (perm)	1610	3302	1583	1610	3388	1583	1770	5074		111	5085	1583
Peak-hour factor, PHF	0.94	0.94	0.94	0.87	0.87	0.87	0.95	0.95	0.95	0.89	0.89	0.89
Adj. Flow (vph)	509	224	187	49	376	356	220	2185	32	212	2271	452
RTOR Reduction (vph)	0	0	158	0	0	140	0	1	0	0	0	248
Lane Group Flow (vph)	254	479	29	44	381	216	220	2216	0	212	2271	204
Turn Type	Split		Perm	Split		Perm	Prot			pm+pt		Perm
Protected Phases	4	4		8	8		5	2		1	6	
Permitted Phases			4			8				6		6
Actuated Green, G (s)	23.0	23.0	23.0	18.0	18.0	18.0	18.0	70.0		82.0	67.0	67.0
Effective Green, g (s)	23.0	23.0	23.0	18.0	18.0	18.0	18.0	70.0		82.0	67.0	67.0
Actuated g/C Ratio	0.15	0.15	0.15	0.12	0.12	0.12	0.12	0.47		0.55	0.45	0.45
Clearance Time (s)	6.0	6.0	6.0	6.0	6.0	6.0	6.0	6.0		6.0	6.0	6.0
Vehicle Extension (s)	3.0	3.0	3.0	3.0	3.0	3.0	3.0	3.0		3.0	3.0	3.0
Lane Grp Cap (vph)	247	506	243	193	407	190	212	2368		227	2271	707
v/s Ratio Prot	c0.16	0.15		0.03	0.11		c0.12	c0.44		0.09	c0.45	
v/s Ratio Perm			0.02			c0.14				0.42		0.13
v/c Ratio	1.03	0.99dl	0.12	0.23	0.94	1.14	1.04	0.94		0.93	1.00	0.29
Uniform Delay, d1	63.5	62.9	54.8	59.7	65.4	66.0	66.0	37.9		48.1	41.5	26.4
Progression Factor	1.00	1.00	1.00	1.00	1.00	1.00	1.00	1.00		1.49	0.56	0.33
Incremental Delay, d2	64.8	26.9	0.2	0.6	28.8	107.1	72.0	8.5		28.5	14.1	0.6
Delay (s)	128.3	89.8	55.0	60.3	94.2	173.1	138.0	46.4		100.3	37.6	9.3
Level of Service	F	F	D	E	F	F	F	D		F	D	A
Approach Delay (s)		93.3			128.2			54.7			37.7	
Approach LOS		F			F			D			D	

Intersection Summary			
HCM Average Control Delay	60.8	HCM Level of Service	E
HCM Volume to Capacity ratio	1.09		
Actuated Cycle Length (s)	150.0	Sum of lost time (s)	30.0
Intersection Capacity Utilization	93.5%	ICU Level of Service	F
Analysis Period (min)	15		

dl Defacto Left Lane. Recode with 1 though lane as a left lane.
c Critical Lane Group

Movement	EBL	EBT	WBT	WBR	SBL	SBR
Lane Configurations						
Volume (vph)	800	800	1500	25	0	1010
Ideal Flow (vphpl)	1900	1900	1900	1900	1900	1900
Total Lost time (s)	6.0	4.0	6.0	6.0		4.0
Lane Util. Factor	0.94	0.95	0.95	1.00		1.00
Frt	1.00	1.00	1.00	0.85		0.86
Flt Protected	0.95	1.00	1.00	1.00		1.00
Satd. Flow (prot)	4990	3539	3539	1583		1611
Flt Permitted	0.95	1.00	1.00	1.00		1.00
Satd. Flow (perm)	4990	3539	3539	1583		1611
Peak-hour factor, PHF	0.92	0.92	0.92	0.92	0.92	0.92
Adj. Flow (vph)	870	870	1630	27	0	1098
RTOR Reduction (vph)	0	0	0	4	0	0
Lane Group Flow (vph)	870	870	1630	23	0	1098
Turn Type	Prot			Perm		Free
Protected Phases	1		2			
Permitted Phases		Free		2		Free
Actuated Green, G (s)	39.0	149.0	98.0	98.0		149.0
Effective Green, g (s)	39.0	149.0	98.0	98.0		149.0
Actuated g/C Ratio	0.26	1.00	0.66	0.66		1.00
Clearance Time (s)	6.0		6.0	6.0		
Lane Grp Cap (vph)	1306	3539	2328	1041		1611
v/s Ratio Prot	0.17		0.46			
v/s Ratio Perm		0.25		0.01		c0.68
v/c Ratio	0.67	0.25	0.70	0.02		0.68
Uniform Delay, d1	49.2	0.0	16.2	8.9		0.0
Progression Factor	1.00	1.00	1.00	1.00		1.00
Incremental Delay, d2	2.7	0.2	1.8	0.0		2.4
Delay (s)	51.9	0.2	18.0	8.9		2.4
Level of Service	D	A	B	A		A
Approach Delay (s)		26.0	17.8		2.4	
Approach LOS		C	B		A	

Intersection Summary			
HCM Average Control Delay	17.2	HCM Level of Service	B
HCM Volume to Capacity ratio	0.68		
Actuated Cycle Length (s)	149.0	Sum of lost time (s)	0.0
Intersection Capacity Utilization	66.7%	ICU Level of Service	C
Analysis Period (min)	15		

c Critical Lane Group

Movement	EBL	EBT	EBR	WBL	WBT	WBR	NBL	NBT	NBR	SBL	SBT	SBR
Lane Configurations												
Volume (vph)	485	280	60	50	360	50	190	625	35	55	390	460
Ideal Flow (vphpl)	1900	1900	1900	1900	1900	1900	1900	1900	1900	1900	1900	1900
Total Lost time (s)	6.0	6.0	4.0	6.0	6.0		6.0	6.0		6.0	6.0	6.0
Lane Util. Factor	0.97	0.95	1.00	1.00	0.95		1.00	0.95		1.00	0.95	0.88
Frt	1.00	1.00	0.85	1.00	0.98		1.00	0.99		1.00	1.00	0.85
Flt Protected	0.95	1.00	1.00	0.95	1.00		0.95	1.00		0.95	1.00	1.00
Satd. Flow (prot)	3433	3539	1583	1770	3474		1770	3511		1770	3539	2787
Flt Permitted	0.95	1.00	1.00	0.95	1.00		0.95	1.00		0.95	1.00	1.00
Satd. Flow (perm)	3433	3539	1583	1770	3474		1770	3511		1770	3539	2787
Peak-hour factor, PHF	0.92	0.92	0.92	1.00	1.00	1.00	0.92	0.92	0.92	0.92	0.92	0.92
Adj. Flow (vph)	527	304	65	50	360	50	207	679	38	60	424	500
RTOR Reduction (vph)	0	0	0	0	7	0	0	3	0	0	0	303
Lane Group Flow (vph)	527	304	65	50	403	0	207	714	0	60	424	197
Turn Type	Prot		Free	Prot			Split			Split		pt+ov
Protected Phases	1	6		5	2		4	4		8	8	8 1
Permitted Phases			Free									
Actuated Green, G (s)	29.4	24.3	150.0	42.1	37.0		36.0	36.0		23.6	23.6	59.0
Effective Green, g (s)	29.4	24.3	150.0	42.1	37.0		36.0	36.0		23.6	23.6	59.0
Actuated g/C Ratio	0.20	0.16	1.00	0.28	0.25		0.24	0.24		0.16	0.16	0.39
Clearance Time (s)	6.0	6.0		6.0	6.0		6.0	6.0		6.0	6.0	
Vehicle Extension (s)	3.0	3.0		3.0	3.0		3.0	3.0		3.0	3.0	
Lane Grp Cap (vph)	673	573	1583	497	857		425	843		278	557	1096
v/s Ratio Prot	c0.15	0.09		c0.03	c0.12		0.12	c0.20		0.03	c0.12	0.07
v/s Ratio Perm			0.04									
v/c Ratio	0.78	0.53	0.04	0.10	0.47		0.49	0.85		0.22	0.76	0.18
Uniform Delay, d1	57.3	57.6	0.0	39.9	48.2		49.1	54.4		55.1	60.5	29.7
Progression Factor	1.00	1.00	1.00	0.64	0.67		1.13	1.13		1.00	1.00	1.00
Incremental Delay, d2	5.9	0.9	0.0	0.4	1.8		0.7	6.2		0.4	6.1	0.1
Delay (s)	63.2	58.6	0.0	26.1	34.3		56.2	67.8		55.5	66.6	29.8
Level of Service	E	E	A	C	C		E	E		E	E	C
Approach Delay (s)		57.1			33.4			65.2			47.2	
Approach LOS		E			C			E			D	

Intersection Summary			
HCM Average Control Delay	53.1	HCM Level of Service	D
HCM Volume to Capacity ratio	0.73		
Actuated Cycle Length (s)	150.0	Sum of lost time (s)	30.0
Intersection Capacity Utilization	67.1%	ICU Level of Service	C
Analysis Period (min)	15		
c Critical Lane Group			

Intersection Sign configuration not allowed in HCM analysis.

Movement	EBL	EBT	EBR	WBL	WBT	WBR	NBL	NBT	NBR	SBL	SBT	SBR
Lane Configurations												
Volume (vph)	115	25	230	20	40	40	170	125	15	5	105	250
Ideal Flow (vphpl)	1900	1900	1900	1900	1900	1900	1900	1900	1900	1900	1900	1900
Lane Width	11	12	11	12	12	12	11	11	12	12	11	11
Total Lost time (s)		6.0	6.0	6.0	6.0		6.0	6.0		6.0	6.0	
Lane Util. Factor		1.00	0.88	1.00	1.00		0.97	0.95		1.00	0.95	
Frt		1.00	0.85	1.00	0.93		1.00	0.98		1.00	0.89	
Flt Protected		0.96	1.00	0.95	1.00		0.95	1.00		0.95	1.00	
Satd. Flow (prot)		1790	2694	1770	1723		3319	3364		1770	3060	
Flt Permitted		0.71	1.00	0.95	1.00		0.95	1.00		0.95	1.00	
Satd. Flow (perm)		1314	2694	1770	1723		3319	3364		1770	3060	
Peak-hour factor, PHF	0.92	0.90	0.92	0.90	0.90	0.90	0.92	0.92	0.90	0.90	0.92	0.92
Adj. Flow (vph)	125	28	250	22	44	44	185	136	17	6	114	272
RTOR Reduction (vph)	0	0	188	0	22	0	0	6	0	0	195	0
Lane Group Flow (vph)	0	153	62	22	66	0	185	147	0	6	191	0
Turn Type	Perm		pt+ov	Prot			Prot			Prot		
Protected Phases		6	6 7	5	2		7	4		3	8	
Permitted Phases	6											
Actuated Green, G (s)		23.2	37.1	46.4	75.6		13.9	55.0		1.4	42.5	
Effective Green, g (s)		23.2	37.1	46.4	75.6		13.9	55.0		1.4	42.5	
Actuated g/C Ratio		0.15	0.25	0.31	0.50		0.09	0.37		0.01	0.28	
Clearance Time (s)		6.0		6.0	6.0		6.0	6.0		6.0	6.0	
Vehicle Extension (s)		3.0		3.0	3.0		3.0	3.0		3.0	3.0	
Lane Grp Cap (vph)		203	666	548	868		308	1233		17	867	
v/s Ratio Prot			0.02	0.01	c0.04		c0.06	0.04		0.00	c0.06	
v/s Ratio Perm		c0.12										
v/c Ratio		0.75	0.09	0.04	0.08		0.60	0.12		0.35	0.22	
Uniform Delay, d1		60.7	43.5	36.2	19.2		65.4	31.5		73.8	41.1	
Progression Factor		0.31	0.64	1.00	1.00		1.18	1.13		0.76	0.70	
Incremental Delay, d2		14.6	0.1	0.1	0.2		3.2	0.2		10.6	0.1	
Delay (s)		33.5	27.8	36.4	19.4		80.2	35.7		66.6	28.7	
Level of Service		C	C	D	B		F	D		E	C	
Approach Delay (s)		30.0			22.8			60.1			29.3	
Approach LOS		C			C			E			C	

Intersection Summary			
HCM Average Control Delay	37.3	HCM Level of Service	D
HCM Volume to Capacity ratio	0.29		
Actuated Cycle Length (s)	150.0	Sum of lost time (s)	18.0
Intersection Capacity Utilization	45.2%	ICU Level of Service	A
Analysis Period (min)	15		

c Critical Lane Group

Movement	EBL	EBT	EBR	WBL	WBT	WBR	NBL	NBT	NBR	SBL	SBT	SBR
Lane Configurations												
Volume (vph)	130	645	205	40	765	60	730	660	130	40	380	80
Ideal Flow (vphpl)	1900	1900	1900	1900	1900	1900	1900	1900	1900	1900	1900	1900
Total Lost time (s)	6.0	6.0	6.0	6.0	6.0		6.0	6.0		6.0	6.0	6.0
Lane Util. Factor	1.00	0.95	1.00	1.00	0.95		0.97	0.95		1.00	1.00	1.00
Frt	1.00	1.00	0.85	1.00	0.99		1.00	0.98		1.00	1.00	0.85
Flt Protected	0.95	1.00	1.00	0.95	1.00		0.95	1.00		0.95	1.00	1.00
Satd. Flow (prot)	1770	3539	1583	1770	3501		3433	3452		1770	1863	1583
Flt Permitted	0.10	1.00	1.00	0.37	1.00		0.95	1.00		0.95	1.00	1.00
Satd. Flow (perm)	180	3539	1583	691	3501		3433	3452		1770	1863	1583
Peak-hour factor, PHF	0.92	0.92	0.92	0.92	0.92	0.92	0.92	0.92	0.92	0.92	0.92	0.92
Adj. Flow (vph)	141	701	223	43	832	65	793	717	141	43	413	87
RTOR Reduction (vph)	0	0	144	0	4	0	0	11	0	0	0	54
Lane Group Flow (vph)	141	701	79	43	893	0	793	847	0	43	413	33
Turn Type	pm+pt		Perm	pm+pt			Prot			Prot		Perm
Protected Phases	1	6		5	2		7	4		3	8	
Permitted Phases	6		6	2								8
Actuated Green, G (s)	53.0	53.0	53.0	46.3	46.3		37.8	61.3		6.9	30.4	30.4
Effective Green, g (s)	53.0	53.0	53.0	46.3	46.3		37.8	61.3		6.9	30.4	30.4
Actuated g/C Ratio	0.35	0.35	0.35	0.31	0.31		0.25	0.41		0.05	0.20	0.20
Clearance Time (s)	6.0	6.0	6.0	6.0	6.0		6.0	6.0		6.0	6.0	6.0
Vehicle Extension (s)	3.0	3.0	3.0	3.0	3.0		3.0	3.0		3.0	3.0	3.0
Lane Grp Cap (vph)	186	1250	559	248	1081		865	1411		81	378	321
v/s Ratio Prot	c0.06	0.20		0.01	c0.26		c0.23	0.25		0.02	c0.22	
v/s Ratio Perm	0.21		0.05	0.05								0.02
v/c Ratio	0.76	0.56	0.14	0.17	0.83		0.92	0.60		0.53	1.09	0.10
Uniform Delay, d1	39.0	39.1	33.0	39.2	48.1		54.6	34.8		70.0	59.8	48.7
Progression Factor	1.28	0.94	0.84	0.69	0.80		1.00	1.00		1.64	0.71	0.93
Incremental Delay, d2	15.6	1.8	0.5	0.3	6.8		14.2	0.7		5.5	69.8	0.1
Delay (s)	65.5	38.7	28.2	27.5	45.3		68.8	35.5		120.3	112.5	45.2
Level of Service	E	D	C	C	D		E	D		F	F	D
Approach Delay (s)		40.0			44.5			51.5			102.3	
Approach LOS		D			D			D			F	

Intersection Summary			
HCM Average Control Delay	53.6	HCM Level of Service	D
HCM Volume to Capacity ratio	0.91		
Actuated Cycle Length (s)	150.0	Sum of lost time (s)	24.0
Intersection Capacity Utilization	91.1%	ICU Level of Service	F
Analysis Period (min)	15		
c Critical Lane Group			

Movement	EBL	EBT	EBR	WBL	WBT	WBR	NBL	NBT	NBR	SBL	SBT	SBR
Lane Configurations												
Volume (vph)	50	725	40	55	745	180	90	80	70	290	35	30
Ideal Flow (vphpl)	1900	1900	1900	1900	1900	1900	1900	1900	1900	1900	1900	1900
Lane Width	11	11	11	11	11	11	11	11	11	11	11	11
Total Lost time (s)	6.0	6.0		6.0	6.0	6.0	6.0	6.0		6.0	6.0	
Lane Util. Factor	1.00	0.95		1.00	0.95	0.88	1.00	1.00		0.97	1.00	
Frt	1.00	0.99		1.00	1.00	0.85	1.00	0.93		1.00	0.93	
Flt Protected	0.95	1.00		0.95	1.00	1.00	0.95	1.00		0.95	1.00	
Satd. Flow (prot)	1711	3395		1711	3421	2694	1711	1675		3319	1675	
Flt Permitted	0.29	1.00		0.28	1.00	1.00	0.95	1.00		0.95	1.00	
Satd. Flow (perm)	515	3395		499	3421	2694	1711	1675		3319	1675	
Peak-hour factor, PHF	0.92	0.92	0.92	0.92	0.92	0.92	0.92	0.92	0.92	0.92	0.92	0.92
Adj. Flow (vph)	54	788	43	60	810	196	98	87	76	315	38	33
RTOR Reduction (vph)	0	2	0	0	0	0	0	22	0	0	22	0
Lane Group Flow (vph)	54	829	0	60	810	196	98	141	0	315	49	0
Turn Type	pm+pt			pm+pt		pt+ov	Prot			Prot		
Protected Phases	1	6		5	2	2 3	7	4		3	8	
Permitted Phases	6			2								
Actuated Green, G (s)	88.5	83.9		88.5	83.9	109.6	13.8	17.8		19.7	23.7	
Effective Green, g (s)	88.5	83.9		88.5	83.9	109.6	13.8	17.8		19.7	23.7	
Actuated g/C Ratio	0.59	0.56		0.59	0.56	0.73	0.09	0.12		0.13	0.16	
Clearance Time (s)	6.0	6.0		6.0	6.0		6.0	6.0		6.0	6.0	
Vehicle Extension (s)	3.0	3.0		3.0	3.0		3.0	3.0		3.0	3.0	
Lane Grp Cap (vph)	341	1899		332	1913	1968	157	199		436	265	
v/s Ratio Prot	0.00	c0.24		c0.01	0.24	0.07	0.06	c0.08		c0.09	c0.03	
v/s Ratio Perm	0.09			0.10								
v/c Ratio	0.16	0.44		0.18	0.42	0.10	0.62	0.71		0.72	0.19	
Uniform Delay, d1	21.1	19.3		21.8	19.1	5.9	65.6	63.6		62.5	54.8	
Progression Factor	2.33	2.28		0.06	0.12	0.18	1.00	1.00		1.06	1.14	
Incremental Delay, d2	0.2	0.6		0.2	0.6	0.0	7.5	11.0		5.7	0.3	
Delay (s)	49.3	44.5		1.5	2.8	1.1	73.1	74.6		72.2	62.9	
Level of Service	D	D		A	A	A	E	E		E	E	
Approach Delay (s)		44.8			2.4			74.0			70.5	
Approach LOS		D			A			E			E	

Intersection Summary			
HCM Average Control Delay	34.2	HCM Level of Service	C
HCM Volume to Capacity ratio	0.54		
Actuated Cycle Length (s)	150.0	Sum of lost time (s)	30.0
Intersection Capacity Utilization	61.4%	ICU Level of Service	B
Analysis Period (min)	15		

c Critical Lane Group

Movement	EBL	EBT	EBR	WBL	WBT	WBR	NBL	NBT	NBR	SBL	SBT	SBR
Lane Configurations												
Volume (vph)	125	1180	10	10	925	235	25	5	5	325	0	100
Ideal Flow (vphpl)	1900	1900	1900	1900	1900	1900	1900	1900	1900	1900	1900	1900
Total Lost time (s)	6.0	6.0		6.0	6.0	6.0	6.0	6.0		6.0	6.0	
Lane Util. Factor	1.00	0.95		1.00	0.95	1.00	1.00	1.00		0.95	0.95	
Frt	1.00	1.00		1.00	1.00	0.85	1.00	0.93		1.00	0.93	
Flt Protected	0.95	1.00		0.95	1.00	1.00	0.95	1.00		0.95	0.97	
Satd. Flow (prot)	1770	3535		1770	3539	1583	1770	1723		1681	1600	
Flt Permitted	0.22	1.00		0.15	1.00	1.00	0.95	1.00		0.95	0.97	
Satd. Flow (perm)	404	3535		276	3539	1583	1770	1723		1681	1600	
Peak-hour factor, PHF	0.95	0.95	0.95	0.95	0.95	0.95	0.95	0.95	0.95	0.95	0.95	0.95
Adj. Flow (vph)	132	1242	11	11	974	247	26	5	5	342	0	105
RTOR Reduction (vph)	0	0	0	0	0	117	0	5	0	0	23	0
Lane Group Flow (vph)	132	1253	0	11	974	130	26	5	0	229	195	0
Turn Type	pm+pt			Perm		Perm	Split			Split		
Protected Phases	7	4			8		2	2		6	6	
Permitted Phases	4			8		8						
Actuated Green, G (s)	94.0	94.0		79.0	79.0	79.0	9.0	9.0		29.0	29.0	
Effective Green, g (s)	94.0	94.0		79.0	79.0	79.0	9.0	9.0		29.0	29.0	
Actuated g/C Ratio	0.63	0.63		0.53	0.53	0.53	0.06	0.06		0.19	0.19	
Clearance Time (s)	6.0	6.0		6.0	6.0	6.0	6.0	6.0		6.0	6.0	
Vehicle Extension (s)	3.0	3.0		3.0	3.0	3.0	3.0	3.0		3.0	3.0	
Lane Grp Cap (vph)	335	2215		145	1864	834	106	103		325	309	
v/s Ratio Prot	0.02	c0.35			0.28		c0.01	0.00		c0.14	0.12	
v/s Ratio Perm	0.22			0.04		0.08						
v/c Ratio	0.39	0.57		0.08	0.52	0.16	0.25	0.05		0.70	0.63	
Uniform Delay, d1	26.9	16.2		17.5	23.2	18.3	67.3	66.5		56.5	55.6	
Progression Factor	1.10	1.16		1.02	1.25	4.66	1.00	1.00		1.00	1.00	
Incremental Delay, d2	0.7	1.0		1.0	1.0	0.4	5.4	0.9		12.1	9.5	
Delay (s)	30.3	19.7		18.8	29.9	85.8	72.7	67.4		68.6	65.1	
Level of Service	C	B		B	C	F	E	E		E	E	
Approach Delay (s)		20.7			41.0			71.2			66.9	
Approach LOS		C			D			E			E	

Intersection Summary			
HCM Average Control Delay	36.0	HCM Level of Service	D
HCM Volume to Capacity ratio	0.57		
Actuated Cycle Length (s)	150.0	Sum of lost time (s)	18.0
Intersection Capacity Utilization	70.0%	ICU Level of Service	C
Analysis Period (min)	15		
c Critical Lane Group			

Movement	EBT	EBR	WBL	WBT	NBL	NBR
Lane Configurations						
Volume (vph)	1320	190	210	910	260	300
Ideal Flow (vphpl)	1900	1900	1900	1900	1900	1900
Total Lost time (s)	6.0		6.0	6.0	6.0	6.0
Lane Util. Factor	0.95		1.00	0.95	0.97	1.00
Frt	0.98		1.00	1.00	1.00	0.85
Flt Protected	1.00		0.95	1.00	0.95	1.00
Satd. Flow (prot)	3472		1770	3539	3433	1583
Flt Permitted	1.00		0.10	1.00	0.95	1.00
Satd. Flow (perm)	3472		179	3539	3433	1583
Peak-hour factor, PHF	0.95	0.95	0.95	0.95	0.95	0.95
Adj. Flow (vph)	1389	200	221	958	274	316
RTOR Reduction (vph)	6	0	0	0	0	231
Lane Group Flow (vph)	1583	0	221	958	274	85
Turn Type			pm+pt			Over
Protected Phases	4		3	8		3
Permitted Phases			8		2	
Actuated Green, G (s)	101.3		120.8	120.8	17.2	13.5
Effective Green, g (s)	101.3		120.8	120.8	17.2	13.5
Actuated g/C Ratio	0.68		0.81	0.81	0.11	0.09
Clearance Time (s)	6.0		6.0	6.0	6.0	6.0
Vehicle Extension (s)	3.0		3.0	3.0	3.0	3.0
Lane Grp Cap (vph)	2345		287	2850	394	142
v/s Ratio Prot	0.46		c0.07	0.27		0.05
v/s Ratio Perm			c0.55		c0.08	
v/c Ratio	0.67		0.77	0.34	0.70	0.60
Uniform Delay, d1	14.5		27.6	3.9	63.9	65.6
Progression Factor	0.16		0.51	2.46	1.00	1.00
Incremental Delay, d2	1.3		8.7	0.2	5.3	6.6
Delay (s)	3.6		22.7	9.8	69.1	72.2
Level of Service	A		C	A	E	E
Approach Delay (s)	3.6			12.2	70.8	
Approach LOS	A			B	E	

Intersection Summary			
HCM Average Control Delay	18.4	HCM Level of Service	B
HCM Volume to Capacity ratio	0.74		
Actuated Cycle Length (s)	150.0	Sum of lost time (s)	12.0
Intersection Capacity Utilization	76.6%	ICU Level of Service	D
Analysis Period (min)	15		
c Critical Lane Group			

Movement	EBL	EBT	EBR	WBL	WBT	WBR	NBL	NBT	NBR	SBL	SBT	SBR
Lane Configurations												
Volume (vph)	180	1270	170	0	745	170	175	245	0	355	290	200
Ideal Flow (vphpl)	1900	1900	1900	1900	1900	1900	1900	1900	1900	1900	1900	1900
Total Lost time (s)	6.0	6.0	6.0		6.0	6.0		6.0		6.0	6.0	
Lane Util. Factor	1.00	0.95	1.00		0.95	1.00		0.95		0.91	0.91	
Frt	1.00	1.00	0.85		1.00	0.85		1.00		1.00	0.95	
Flt Protected	0.95	1.00	1.00		1.00	1.00		0.98		0.95	0.99	
Satd. Flow (prot)	1770	3539	1583		3539	1583		3467		1610	3188	
Flt Permitted	0.19	1.00	1.00		1.00	1.00		0.98		0.95	0.99	
Satd. Flow (perm)	363	3539	1583		3539	1583		3467		1610	3188	
Peak-hour factor, PHF	0.95	0.95	0.95	0.95	0.95	0.95	0.95	0.95	0.95	0.95	0.95	0.95
Adj. Flow (vph)	189	1337	179	0	784	179	184	258	0	374	305	211
RTOR Reduction (vph)	0	0	55	0	0	114	0	0	0	0	45	0
Lane Group Flow (vph)	189	1337	124	0	784	65	0	442	0	299	546	0
Turn Type	pm+pt		Perm			Perm	Split			Split		
Protected Phases	7	4			8		2	2		6	6	
Permitted Phases	4		4			8						
Actuated Green, G (s)	65.0	65.0	65.0		48.0	48.0		23.0		44.0	44.0	
Effective Green, g (s)	65.0	65.0	65.0		48.0	48.0		23.0		44.0	44.0	
Actuated g/C Ratio	0.43	0.43	0.43		0.32	0.32		0.15		0.29	0.29	
Clearance Time (s)	6.0	6.0	6.0		6.0	6.0		6.0		6.0	6.0	
Vehicle Extension (s)	3.0	3.0	3.0		3.0	3.0		3.0		3.0	3.0	
Lane Grp Cap (vph)	260	1534	686		1132	507		532		472	935	
v/s Ratio Prot	0.05	c0.38			0.22			c0.13		c0.19	0.17	
v/s Ratio Perm	0.26		0.08			0.04						
v/c Ratio	0.73	0.87	0.18		0.69	0.13		0.83		0.63	0.58	
Uniform Delay, d1	51.3	38.7	26.1		44.6	36.2		61.6		46.0	45.2	
Progression Factor	1.29	1.36	1.61		0.94	1.14		0.73		1.00	1.00	
Incremental Delay, d2	7.1	5.2	0.4		3.4	0.5		11.5		6.3	2.7	
Delay (s)	73.2	57.7	42.6		45.3	41.7		56.6		52.3	47.9	
Level of Service	E	E	D		D	D		E		D	D	
Approach Delay (s)		57.8			44.6			56.6			49.4	
Approach LOS		E			D			E			D	

Intersection Summary			
HCM Average Control Delay	52.6	HCM Level of Service	D
HCM Volume to Capacity ratio	0.79		
Actuated Cycle Length (s)	150.0	Sum of lost time (s)	18.0
Intersection Capacity Utilization	78.9%	ICU Level of Service	D
Analysis Period (min)	15		
c Critical Lane Group			

Movement	EBL	EBT	EBR	WBL	WBT	WBR	NBL	NBT	NBR	SBL	SBT	SBR
Lane Configurations												
Volume (vph)	10	2035	90	50	935	10	105	5	135	5	5	0
Ideal Flow (vphpl)	1900	1900	1900	1900	1900	1900	1900	1900	1900	1900	1900	1900
Total Lost time (s)	6.0	6.0		6.0	6.0		6.0	6.0			6.0	
Lane Util. Factor	1.00	0.95		1.00	0.95		1.00	1.00			1.00	
Frt	1.00	0.99		1.00	1.00		1.00	0.86			1.00	
Flt Protected	0.95	1.00		0.95	1.00		0.95	1.00			0.98	
Satd. Flow (prot)	1770	3517		1770	3533		1770	1593			1817	
Flt Permitted	0.29	1.00		0.04	1.00		0.75	1.00			0.88	
Satd. Flow (perm)	537	3517		69	3533		1399	1593			1640	
Peak-hour factor, PHF	0.95	0.95	0.95	0.95	0.95	0.95	0.95	0.95	0.95	0.95	0.95	0.95
Adj. Flow (vph)	11	2142	95	53	984	11	111	5	142	5	5	0
RTOR Reduction (vph)	0	2	0	0	0	0	0	78	0	0	0	0
Lane Group Flow (vph)	11	2235	0	53	995	0	111	70	0	0	10	0
Turn Type	Perm			pm+pt			Perm			Perm		
Protected Phases		4		3	8			2			6	
Permitted Phases	4			8			2			6		
Actuated Green, G (s)	101.4	101.4		113.0	113.0		25.0	25.0			25.0	
Effective Green, g (s)	101.4	101.4		113.0	113.0		25.0	25.0			25.0	
Actuated g/C Ratio	0.68	0.68		0.75	0.75		0.17	0.17			0.17	
Clearance Time (s)	6.0	6.0		6.0	6.0		6.0	6.0			6.0	
Vehicle Extension (s)	3.0	3.0		3.0	3.0		3.0	3.0			3.0	
Lane Grp Cap (vph)	363	2377		115	2662		233	266			273	
v/s Ratio Prot		c0.64		0.02	c0.28			0.04				
v/s Ratio Perm	0.02			0.33			c0.08				0.01	
v/c Ratio	0.03	0.94		0.46	0.37		0.48	0.26			0.04	
Uniform Delay, d1	8.0	21.6		36.3	6.4		56.6	54.5			52.4	
Progression Factor	1.04	0.66		1.00	1.00		1.00	1.00			1.00	
Incremental Delay, d2	0.1	6.7		2.9	0.4		6.8	2.4			0.3	
Delay (s)	8.4	21.1		39.3	6.8		63.4	56.8			52.7	
Level of Service	A	C		D	A		E	E			D	
Approach Delay (s)		21.0			8.4			59.7			52.7	
Approach LOS		C			A			E			D	

Intersection Summary			
HCM Average Control Delay	20.2	HCM Level of Service	C
HCM Volume to Capacity ratio	0.84		
Actuated Cycle Length (s)	150.0	Sum of lost time (s)	18.0
Intersection Capacity Utilization	79.4%	ICU Level of Service	D
Analysis Period (min)	15		
c Critical Lane Group			

Movement	EBL	EBT	EBR	WBL	WBT	WBR	NBL	NBT	NBR	SBL	SBT	SBR
Lane Configurations												
Volume (vph)	250	520	710	0	475	75	405	935	40	40	610	175
Ideal Flow (vphpl)	1900	1900	1900	1900	1900	1900	1900	1900	1900	1900	1900	1900
Total Lost time (s)	6.0	6.0			6.0		6.0	6.0		6.0	6.0	
Lane Util. Factor	1.00	0.95			0.91		1.00	0.91		1.00	0.91	
Frt	1.00	0.91			0.98		1.00	0.99		1.00	0.97	
Flt Protected	0.95	1.00			1.00		0.95	1.00		0.95	1.00	
Satd. Flow (prot)	1770	3233			4981		1770	5054		1770	4915	
Flt Permitted	0.23	1.00			1.00		0.27	1.00		0.95	1.00	
Satd. Flow (perm)	436	3233			4981		504	5054		1770	4915	
Peak-hour factor, PHF	0.95	0.95	0.95	0.95	0.95	0.95	0.95	0.95	0.95	0.95	0.95	0.95
Adj. Flow (vph)	263	547	747	0	500	79	426	984	42	42	642	184
RTOR Reduction (vph)	0	171	0	0	14	0	0	3	0	0	33	0
Lane Group Flow (vph)	263	1123	0	0	565	0	426	1023	0	42	793	0
Turn Type	pm+pt						pm+pt			Prot		
Protected Phases	7	4			8		5	2		1	6	
Permitted Phases	4						2					
Actuated Green, G (s)	57.4	57.4			29.9		67.7	67.7		6.9	33.4	
Effective Green, g (s)	57.4	57.4			29.9		67.7	67.7		6.9	33.4	
Actuated g/C Ratio	0.38	0.38			0.20		0.45	0.45		0.05	0.22	
Clearance Time (s)	6.0	6.0			6.0		6.0	6.0		6.0	6.0	
Vehicle Extension (s)	3.0	3.0			3.0		3.0	3.0		3.0	3.0	
Lane Grp Cap (vph)	358	1237			993		575	2281		81	1094	
v/s Ratio Prot	0.11	c0.35			0.11		c0.20	0.20		0.02	c0.16	
v/s Ratio Perm	0.18						c0.13					
v/c Ratio	0.73	0.96dr			0.57		0.74	0.45		0.52	0.72	
Uniform Delay, d1	34.9	43.8			54.2		37.9	28.3		69.9	54.0	
Progression Factor	1.00	1.00			1.00		1.05	1.25		0.94	1.29	
Incremental Delay, d2	7.6	9.7			0.8		3.1	0.4		5.4	4.1	
Delay (s)	42.5	53.5			55.0		42.9	35.7		71.3	73.9	
Level of Service	D	D			D		D	D		E	E	
Approach Delay (s)		51.7			55.0			37.8			73.8	
Approach LOS		D			D			D			E	

Intersection Summary			
HCM Average Control Delay	51.9	HCM Level of Service	D
HCM Volume to Capacity ratio	0.82		
Actuated Cycle Length (s)	150.0	Sum of lost time (s)	18.0
Intersection Capacity Utilization	90.4%	ICU Level of Service	E
Analysis Period (min)	15		

dr Defacto Right Lane. Recode with 1 though lane as a right lane.
c Critical Lane Group

Movement	EBL	EBT	EBR	WBL	WBT	WBR	NBL	NBT	NBR	SBL	SBT	SBR
Lane Configurations												
Volume (vph)	275	980	5	15	710	75	5	0	10	60	0	110
Ideal Flow (vphpl)	1900	1900	1900	1900	1900	1900	1900	1900	1900	1900	1900	1900
Total Lost time (s)	6.0	6.0		6.0	6.0			6.0			6.0	6.0
Lane Util. Factor	1.00	0.91		1.00	0.91			1.00			1.00	1.00
Frt	1.00	1.00		1.00	0.99			0.91			1.00	0.85
Flt Protected	0.95	1.00		0.95	1.00			0.98			0.95	1.00
Satd. Flow (prot)	1770	5082		1770	5012			1664			1770	1583
Flt Permitted	0.32	1.00		0.25	1.00			0.94			0.75	1.00
Satd. Flow (perm)	598	5082		468	5012			1587			1392	1583
Peak-hour factor, PHF	0.95	0.95	0.95	0.95	0.95	0.95	0.95	0.95	0.95	0.95	0.95	0.95
Adj. Flow (vph)	289	1032	5	16	747	79	5	0	11	63	0	116
RTOR Reduction (vph)	0	1	0	0	11	0	0	9	0	0	0	93
Lane Group Flow (vph)	289	1036	0	16	815	0	0	7	0	0	63	23
Turn Type	Perm			Perm			Perm			Perm		Perm
Protected Phases		4			8			2			6	
Permitted Phases	4			8			2			6		6
Actuated Green, G (s)	108.2	108.2		108.2	108.2			29.8			29.8	29.8
Effective Green, g (s)	108.2	108.2		108.2	108.2			29.8			29.8	29.8
Actuated g/C Ratio	0.72	0.72		0.72	0.72			0.20			0.20	0.20
Clearance Time (s)	6.0	6.0		6.0	6.0			6.0			6.0	6.0
Vehicle Extension (s)	3.0	3.0		3.0	3.0			3.0			3.0	3.0
Lane Grp Cap (vph)	431	3666		338	3615			315			277	314
v/s Ratio Prot		0.20			0.16							
v/s Ratio Perm	c0.48			0.03				0.00			c0.05	0.01
v/c Ratio	0.67	0.28		0.05	0.23			0.02			0.23	0.07
Uniform Delay, d1	11.3	7.3		6.0	7.0			48.4			50.4	48.9
Progression Factor	0.83	0.63		0.48	0.32			1.00			1.00	1.00
Incremental Delay, d2	3.6	0.0		0.0	0.0			0.1			1.9	0.5
Delay (s)	13.0	4.7		2.9	2.3			48.5			52.3	49.3
Level of Service	B	A		A	A			D			D	D
Approach Delay (s)		6.5			2.3			48.5			50.4	
Approach LOS		A			A			D			D	

Intersection Summary			
HCM Average Control Delay	8.6	HCM Level of Service	A
HCM Volume to Capacity ratio	0.57		
Actuated Cycle Length (s)	150.0	Sum of lost time (s)	12.0
Intersection Capacity Utilization	53.9%	ICU Level of Service	A
Analysis Period (min)	15		
c Critical Lane Group			

Movement	EBL	EBR	NBL	NBT	SBT	SBR
Lane Configurations						
Volume (veh/h)	215	55	80	245	175	115
Sign Control	Stop			Free	Free	
Grade	0%			0%	0%	
Peak Hour Factor	0.95	0.95	0.95	0.95	0.95	0.95
Hourly flow rate (vph)	226	58	84	258	184	121
Pedestrians						
Lane Width (ft)						
Walking Speed (ft/s)						
Percent Blockage						
Right turn flare (veh)						
Median type				None	None	
Median storage veh)						
Upstream signal (ft)					1284	
pX, platoon unblocked						
vC, conflicting volume	671	245	305			
vC1, stage 1 conf vol						
vC2, stage 2 conf vol						
vCu, unblocked vol	671	245	305			
tC, single (s)	6.4	6.2	4.1			
tC, 2 stage (s)						
tF (s)	3.5	3.3	2.2			
p0 queue free %	42	93	93			
cM capacity (veh/h)	393	794	1256			

Direction, Lane #	EB 1	EB 2	NB 1	SB 1
Volume Total	226	58	342	305
Volume Left	226	0	84	0
Volume Right	0	58	0	121
cSH	393	794	1256	1700
Volume to Capacity	0.58	0.07	0.07	0.18
Queue Length 95th (ft)	87	6	5	0
Control Delay (s)	25.8	9.9	2.5	0.0
Lane LOS	D	A	A	
Approach Delay (s)	22.6		2.5	0.0
Approach LOS	C			

Intersection Summary			
Average Delay	7.8		
Intersection Capacity Utilization	55.5%	ICU Level of Service	B
Analysis Period (min)	15		

Movement	EBL	EBT	EBR	WBL	WBT	WBR	NBL	NBT	NBR	SBL	SBT	SBR
Lane Configurations												
Volume (vph)	55	155	75	570	130	25	180	1300	370	75	1145	100
Ideal Flow (vphpl)	1900	1900	1900	1900	1900	1900	1900	1900	1900	1900	1900	1900
Total Lost time (s)		6.0		6.0	6.0		6.0	6.0	6.0	6.0	6.0	
Lane Util. Factor		0.95		0.97	1.00		1.00	0.95	1.00	1.00	0.91	
Frt		0.96		1.00	0.98		1.00	1.00	0.85	1.00	0.99	
Flt Protected		0.99		0.95	1.00		0.95	1.00	1.00	0.95	1.00	
Satd. Flow (prot)		3367		3433	1818		1770	3539	1583	1770	5024	
Flt Permitted		0.99		0.95	1.00		0.15	1.00	1.00	0.07	1.00	
Satd. Flow (perm)		3367		3433	1818		281	3539	1583	138	5024	
Peak-hour factor, PHF	0.95	0.95	0.95	0.95	0.95	0.95	0.95	0.95	0.95	0.95	0.95	0.95
Adj. Flow (vph)	58	163	79	600	137	26	189	1368	389	79	1205	105
RTOR Reduction (vph)	0	24	0	0	5	0	0	0	137	0	7	0
Lane Group Flow (vph)	0	276	0	600	158	0	189	1368	252	79	1303	0
Turn Type	Split			Split			pm+pt		Perm	pm+pt		
Protected Phases	4	4		8	8		5	2		1	6	
Permitted Phases							2		2	6		
Actuated Green, G (s)		15.4		30.4	30.4		72.8	72.8	72.8	61.2	61.2	
Effective Green, g (s)		15.4		30.4	30.4		72.8	72.8	72.8	61.2	61.2	
Actuated g/C Ratio		0.10		0.20	0.20		0.49	0.49	0.49	0.41	0.41	
Clearance Time (s)		6.0		6.0	6.0		6.0	6.0	6.0	6.0	6.0	
Vehicle Extension (s)		3.0		3.0	3.0		3.0	3.0	3.0	3.0	3.0	
Lane Grp Cap (vph)		346		696	368		325	1718	768	137	2050	
v/s Ratio Prot		c0.08		c0.17	0.09		0.07	c0.39		0.03	c0.26	
v/s Ratio Perm							0.21		0.16	0.21		
v/c Ratio		0.80		0.86	0.43		0.58	0.80	0.33	0.58	0.64	
Uniform Delay, d1		65.8		57.8	52.2		40.5	32.4	23.6	36.6	35.5	
Progression Factor		1.00		0.48	0.43		1.04	1.08	1.82	0.90	0.77	
Incremental Delay, d2		12.0		10.0	0.7		2.3	3.4	1.0	3.4	0.9	
Delay (s)		77.8		37.8	23.0		44.5	38.3	44.0	36.2	28.3	
Level of Service		E		D	C		D	D	D	D	C	
Approach Delay (s)		77.8			34.7			40.1			28.8	
Approach LOS		E			C			D			C	

Intersection Summary			
HCM Average Control Delay	38.1	HCM Level of Service	D
HCM Volume to Capacity ratio	0.82		
Actuated Cycle Length (s)	150.0	Sum of lost time (s)	24.0
Intersection Capacity Utilization	84.6%	ICU Level of Service	E
Analysis Period (min)	15		
c Critical Lane Group			

Movement	EBL	EBT	EBR	WBL	WBT	WBR	NBL	NBT	NBR	SBL	SBT	SBR
Lane Configurations												
Volume (vph)	70	515	15	5	525	140	70	70	10	180	200	130
Ideal Flow (vphpl)	1900	1900	1900	1900	1900	1900	1900	1900	1900	1900	1900	1900
Total Lost time (s)	6.0	6.0		6.0	6.0		6.0	6.0		6.0	6.0	6.0
Lane Util. Factor	1.00	0.95		1.00	0.95		1.00	0.95		0.95	0.95	1.00
Frt	1.00	1.00		1.00	0.97		1.00	0.98		1.00	1.00	0.85
Flt Protected	0.95	1.00		0.95	1.00		0.95	1.00		0.95	1.00	1.00
Satd. Flow (prot)	1770	3524		1770	3428		1770	3471		1681	1762	1583
Flt Permitted	0.19	1.00		0.29	1.00		0.95	1.00		0.95	1.00	1.00
Satd. Flow (perm)	356	3524		538	3428		1770	3471		1681	1762	1583
Peak-hour factor, PHF	0.95	0.95	0.95	0.95	0.95	0.95	0.95	0.95	0.95	0.95	0.95	0.95
Adj. Flow (vph)	74	542	16	5	553	147	74	74	11	189	211	137
RTOR Reduction (vph)	0	1	0	0	19	0	0	6	0	0	0	94
Lane Group Flow (vph)	74	557	0	5	681	0	74	79	0	170	230	43
Turn Type	Perm			Perm			Split			Split		Perm
Protected Phases		4			8		2	2		6	6	
Permitted Phases	4			8								6
Actuated Green, G (s)	42.8	42.8		42.8	42.8		42.2	42.2		47.0	47.0	47.0
Effective Green, g (s)	42.8	42.8		42.8	42.8		42.2	42.2		47.0	47.0	47.0
Actuated g/C Ratio	0.29	0.29		0.29	0.29		0.28	0.28		0.31	0.31	0.31
Clearance Time (s)	6.0	6.0		6.0	6.0		6.0	6.0		6.0	6.0	6.0
Vehicle Extension (s)	3.0	3.0		3.0	3.0		3.0	3.0		3.0	3.0	3.0
Lane Grp Cap (vph)	102	1006		154	978		498	977		527	552	496
v/s Ratio Prot		0.16			0.20		c0.04	0.02		0.10	c0.13	
v/s Ratio Perm	c0.21			0.01								0.03
v/c Ratio	0.73	0.55		0.03	0.70		0.15	0.08		0.32	0.42	0.09
Uniform Delay, d1	48.3	45.5		38.7	47.8		40.4	39.6		39.3	40.7	36.3
Progression Factor	0.97	1.05		0.31	0.42		1.00	1.00		1.00	1.00	1.00
Incremental Delay, d2	19.5	0.6		0.1	1.3		0.6	0.2		1.6	2.3	0.3
Delay (s)	66.2	48.3		12.0	21.3		41.1	39.8		41.0	43.0	36.7
Level of Service	E	D		B	C		D	D		D	D	D
Approach Delay (s)		50.4			21.2			40.4			40.7	
Approach LOS		D			C			D			D	

Intersection Summary			
HCM Average Control Delay	36.9	HCM Level of Service	D
HCM Volume to Capacity ratio	0.43		
Actuated Cycle Length (s)	150.0	Sum of lost time (s)	18.0
Intersection Capacity Utilization	57.3%	ICU Level of Service	B
Analysis Period (min)	15		
c Critical Lane Group			

Movement	EBL	EBT	EBR	WBL	WBT	WBR	NBL	NBT	NBR	SBL	SBT	SBR
Lane Configurations												
Volume (vph)	125	1145	35	15	895	135	55	35	25	270	5	125
Ideal Flow (vphpl)	1900	1900	1900	1900	1900	1900	1900	1900	1900	1900	1900	1900
Total Lost time (s)	6.0	6.0		6.0	6.0		6.0	6.0		6.0	6.0	6.0
Lane Util. Factor	1.00	0.95		1.00	0.95		1.00	1.00		1.00	1.00	1.00
Frt	1.00	1.00		1.00	0.98		1.00	0.94		1.00	1.00	0.85
Flt Protected	0.95	1.00		0.95	1.00		0.95	1.00		0.95	1.00	1.00
Satd. Flow (prot)	1770	3523		1770	3470		1770	1747		1770	1863	1583
Flt Permitted	0.09	1.00		0.07	1.00		0.75	1.00		0.72	1.00	1.00
Satd. Flow (perm)	176	3523		138	3470		1405	1747		1334	1863	1583
Peak-hour factor, PHF	0.95	0.95	0.95	0.95	0.95	0.95	0.95	0.95	0.95	0.95	0.95	0.95
Adj. Flow (vph)	132	1205	37	16	942	142	58	37	26	284	5	132
RTOR Reduction (vph)	0	2	0	0	8	0	0	14	0	0	0	73
Lane Group Flow (vph)	132	1240	0	16	1076	0	58	49	0	284	5	59
Turn Type	pm+pt			Perm			Perm			Perm		Perm
Protected Phases	7	4			8			2			6	
Permitted Phases	4			8			2			6		6
Actuated Green, G (s)	70.7	70.7		54.1	54.1		67.3	67.3		67.3	67.3	67.3
Effective Green, g (s)	70.7	70.7		54.1	54.1		67.3	67.3		67.3	67.3	67.3
Actuated g/C Ratio	0.47	0.47		0.36	0.36		0.45	0.45		0.45	0.45	0.45
Clearance Time (s)	6.0	6.0		6.0	6.0		6.0	6.0		6.0	6.0	6.0
Vehicle Extension (s)	3.0	3.0		3.0	3.0		3.0	3.0		3.0	3.0	3.0
Lane Grp Cap (vph)	196	1661		50	1252		630	784		599	836	710
v/s Ratio Prot	0.05	c0.35			c0.31			0.03			0.00	
v/s Ratio Perm	0.27			0.12			0.04			c0.21		0.04
v/c Ratio	0.67	0.75		0.32	0.86		0.09	0.06		0.47	0.01	0.08
Uniform Delay, d1	55.7	32.3		34.7	44.4		23.8	23.5		29.0	22.9	23.7
Progression Factor	1.00	0.98		0.92	0.94		1.00	1.00		1.00	1.00	1.00
Incremental Delay, d2	3.1	0.6		3.7	6.1		0.3	0.2		2.7	0.0	0.2
Delay (s)	58.8	32.2		35.5	48.0		24.1	23.6		31.6	22.9	23.9
Level of Service	E	C		D	D		C	C		C	C	C
Approach Delay (s)		34.7			47.8			23.8			29.1	
Approach LOS		C			D			C			C	

Intersection Summary			
HCM Average Control Delay	38.3	HCM Level of Service	D
HCM Volume to Capacity ratio	0.64		
Actuated Cycle Length (s)	150.0	Sum of lost time (s)	12.0
Intersection Capacity Utilization	72.7%	ICU Level of Service	C
Analysis Period (min)	15		
c Critical Lane Group			

Movement	EBL	EBT	EBR	WBL	WBT	WBR	NBL	NBT	NBR	SBL	SBT	SBR
Lane Configurations												
Volume (vph)	12	0	9	244	0	24	46	1814	224	44	1727	19
Ideal Flow (vphpl)	1900	1900	1900	1900	1900	1900	1900	1900	1900	1900	1900	1900
Total Lost time (s)		6.0		6.0		6.0	6.0	6.0		6.0	6.0	
Lane Util. Factor		1.00		1.00		1.00	1.00	0.91		1.00	0.91	
Frt		0.94		1.00		0.85	1.00	0.98		1.00	1.00	
Flt Protected		0.97		0.95		1.00	0.95	1.00		0.95	1.00	
Satd. Flow (prot)		1705		1770		1583	1770	5002		1770	5077	
Flt Permitted		0.97		0.74		1.00	0.09	1.00		0.07	1.00	
Satd. Flow (perm)		1705		1372		1583	173	5002		122	5077	
Peak-hour factor, PHF	0.66	0.66	0.66	0.88	0.88	0.88	0.94	0.94	0.94	0.94	0.94	0.94
Adj. Flow (vph)	18	0	14	277	0	27	49	1930	238	47	1837	20
RTOR Reduction (vph)	0	12	0	0	0	21	0	10	0	0	1	0
Lane Group Flow (vph)	0	20	0	277	0	6	49	2158	0	47	1856	0
Turn Type	Perm			custom		custom	pm+pt			Perm		
Protected Phases		4					5	2			6	
Permitted Phases	4			8		8	2			6		
Actuated Green, G (s)		19.0		19.0		19.0	119.0	119.0		109.8	109.8	
Effective Green, g (s)		19.0		19.0		19.0	119.0	119.0		109.8	109.8	
Actuated g/C Ratio		0.13		0.13		0.13	0.79	0.79		0.73	0.73	
Clearance Time (s)		6.0		6.0		6.0	6.0	6.0		6.0	6.0	
Vehicle Extension (s)		3.0		3.0		3.0	3.0	3.0		3.0	3.0	
Lane Grp Cap (vph)		216		174		201	171	3968		89	3716	
v/s Ratio Prot							0.01	c0.43			0.37	
v/s Ratio Perm		0.01		c0.20		0.00	0.22			0.38		
v/c Ratio		0.09		1.59		0.03	0.29	0.54		0.53	0.50	
Uniform Delay, d1		57.9		65.5		57.4	10.7	5.6		8.8	8.5	
Progression Factor		1.00		1.00		1.00	0.19	0.19		1.37	1.01	
Incremental Delay, d2		0.2		291.8		0.1	0.6	0.3		15.2	0.3	
Delay (s)		58.1		357.3		57.5	2.6	1.4		27.2	8.9	
Level of Service		E		F		E	A	A		C	A	
Approach Delay (s)		58.1			330.7			1.4			9.4	
Approach LOS		E			F			A			A	

Intersection Summary			
HCM Average Control Delay	27.7	HCM Level of Service	C
HCM Volume to Capacity ratio	0.69		
Actuated Cycle Length (s)	150.0	Sum of lost time (s)	12.0
Intersection Capacity Utilization	68.6%	ICU Level of Service	C
Analysis Period (min)	15		
c Critical Lane Group			

Movement	EBL	EBT	EBR	WBL	WBT	WBR	NBL	NBT	NBR	SBL	SBT	SBR
Lane Configurations												
Volume (vph)	317	312	82	470	467	123	294	1644	744	99	1602	279
Ideal Flow (vphpl)	1900	1900	1900	1900	1900	1900	1900	1900	1900	1900	1900	1900
Total Lost time (s)	6.0	6.0		6.0	6.0	6.0	6.0	6.0	6.0	6.0	6.0	
Lane Util. Factor	0.97	0.95		0.97	0.95	1.00	1.00	0.91	1.00	1.00	0.91	
Frt	1.00	0.97		1.00	1.00	0.85	1.00	1.00	0.85	1.00	0.98	
Flt Protected	0.95	1.00		0.95	1.00	1.00	0.95	1.00	1.00	0.95	1.00	
Satd. Flow (prot)	3433	3429		3433	3539	1583	1770	5085	1583	1770	4972	
Flt Permitted	0.95	1.00		0.95	1.00	1.00	0.06	1.00	1.00	0.07	1.00	
Satd. Flow (perm)	3433	3429		3433	3539	1583	113	5085	1583	124	4972	
Peak-hour factor, PHF	0.86	0.86	0.86	0.98	0.98	0.98	0.82	0.82	0.82	0.95	0.95	0.95
Adj. Flow (vph)	369	363	95	480	477	126	359	2005	907	104	1686	294
RTOR Reduction (vph)	0	0	0	0	0	5	0	0	226	0	0	0
Lane Group Flow (vph)	369	458	0	480	477	121	359	2005	681	104	1980	0
Turn Type	Prot			Prot		pm+ov	pm+pt		Perm	pm+pt		
Protected Phases	7	4		3	8	1	5	2		1	6	
Permitted Phases						8	2		2	6		
Actuated Green, G (s)	17.0	20.0		21.0	24.0	32.5	91.0	76.5	76.5	68.5	60.0	
Effective Green, g (s)	17.0	20.0		21.0	24.0	32.5	91.0	76.5	76.5	68.5	60.0	
Actuated g/C Ratio	0.11	0.13		0.14	0.16	0.22	0.61	0.51	0.51	0.46	0.40	
Clearance Time (s)	6.0	6.0		6.0	6.0	6.0	6.0	6.0	6.0	6.0	6.0	
Vehicle Extension (s)	3.0	3.0		3.0	3.0	3.0	3.0	3.0	3.0	3.0	3.0	
Lane Grp Cap (vph)	389	457		481	566	406	345	2593	807	150	1989	
v/s Ratio Prot	0.11	c0.13		c0.14	c0.13	0.02	c0.17	0.39		0.04	0.40	
v/s Ratio Perm						0.06	c0.46		0.43	0.28		
v/c Ratio	0.95	1.00		1.00	0.84	0.30	1.04	0.77	0.84	0.69	1.00	
Uniform Delay, d1	66.1	65.0		64.5	61.2	49.2	51.8	29.7	31.6	28.3	44.9	
Progression Factor	1.00	1.00		1.00	1.00	1.00	1.48	0.46	0.65	1.22	0.91	
Incremental Delay, d2	32.2	42.6		40.2	11.0	0.4	54.6	1.9	8.7	10.2	16.7	
Delay (s)	98.3	107.6		104.7	72.1	49.6	131.3	15.6	29.3	44.6	57.3	
Level of Service	F	F		F	E	D	F	B	C	D	E	
Approach Delay (s)		103.5			83.9			32.1			56.7	
Approach LOS		F			F			C			E	

Intersection Summary			
HCM Average Control Delay	55.0	HCM Level of Service	E
HCM Volume to Capacity ratio	1.06		
Actuated Cycle Length (s)	150.0	Sum of lost time (s)	24.0
Intersection Capacity Utilization	98.1%	ICU Level of Service	F
Analysis Period (min)	15		
c Critical Lane Group			

Movement	EBL	EBT	EBR	WBL	WBT	WBR	NBL	NBT	NBR	SBL	SBT	SBR
Lane Configurations												
Volume (vph)	0	0	0	91	30	327	683	2355	0	0	1666	488
Ideal Flow (vphpl)	1900	1900	1900	1900	1900	1900	1900	1900	1900	1900	1900	1900
Total Lost time (s)				6.0	6.0	6.0	6.0	6.0			6.0	6.0
Lane Util. Factor				0.95	0.95	1.00	0.97	0.86			0.81	1.00
Frt				1.00	1.00	0.85	1.00	1.00			1.00	0.85
Flt Protected				0.95	0.98	1.00	0.95	1.00			1.00	1.00
Satd. Flow (prot)				1681	1726	1583	3433	6408			7544	1583
Flt Permitted				0.95	0.98	1.00	0.95	1.00			1.00	1.00
Satd. Flow (perm)				1681	1726	1583	3433	6408			7544	1583
Peak-hour factor, PHF	0.95	0.95	0.95	0.86	0.86	0.86	0.90	0.90	0.90	0.95	0.95	0.95
Adj. Flow (vph)	0	0	0	106	35	380	759	2617	0	0	1754	514
RTOR Reduction (vph)	0	0	0	0	0	1	0	0	0	0	0	326
Lane Group Flow (vph)	0	0	0	70	71	379	759	2617	0	0	1754	188
Turn Type				Perm		Perm	Prot					Perm
Protected Phases					8		5	2			6	
Permitted Phases				8		8						6
Actuated Green, G (s)				40.5	40.5	40.5	36.7	97.5			54.8	54.8
Effective Green, g (s)				40.5	40.5	40.5	36.7	97.5			54.8	54.8
Actuated g/C Ratio				0.27	0.27	0.27	0.24	0.65			0.37	0.37
Clearance Time (s)				6.0	6.0	6.0	6.0	6.0			6.0	6.0
Vehicle Extension (s)				3.0	3.0	3.0	3.0	3.0			3.0	3.0
Lane Grp Cap (vph)				454	466	427	840	4165			2756	578
v/s Ratio Prot							c0.22	c0.41			0.23	
v/s Ratio Perm				0.04	0.04	c0.24						0.12
v/c Ratio				0.15	0.15	0.89	0.90	0.63			0.64	0.32
Uniform Delay, d1				41.7	41.7	52.5	54.9	15.5			39.4	34.3
Progression Factor				1.00	1.00	1.00	0.88	0.44			0.59	0.73
Incremental Delay, d2				0.2	0.2	19.3	10.1	0.5			0.3	0.4
Delay (s)				41.9	41.8	71.9	58.3	7.4			23.6	25.5
Level of Service				D	D	E	E	A			C	C
Approach Delay (s)		0.0			63.7			18.8			24.0	
Approach LOS		A			E			B			C	

Intersection Summary			
HCM Average Control Delay	24.5	HCM Level of Service	C
HCM Volume to Capacity ratio	0.76		
Actuated Cycle Length (s)	150.0	Sum of lost time (s)	12.0
Intersection Capacity Utilization	68.0%	ICU Level of Service	C
Analysis Period (min)	15		
c Critical Lane Group			

Movement	EBL	EBT	EBR	WBL	WBT	WBR	NBL	NBT	NBR	SBL	SBT	SBR
Lane Configurations												
Volume (vph)	698	0	209	0	0	0	0	2340	208	135	1621	0
Ideal Flow (vphpl)	1900	1900	1900	1900	1900	1900	1900	1900	1900	1900	1900	1900
Total Lost time (s)	6.0		6.0					6.0		6.0	6.0	
Lane Util. Factor	0.97		0.88					0.76		0.97	0.91	
Frt	1.00		0.85					0.99		1.00	1.00	
Flt Protected	0.95		1.00					1.00		0.95	1.00	
Satd. Flow (prot)	3433		2787					8390		3433	5085	
Flt Permitted	0.95		1.00					1.00		0.95	1.00	
Satd. Flow (perm)	3433		2787					8390		3433	5085	
Peak-hour factor, PHF	0.92	0.92	0.92	0.95	0.95	0.95	0.93	0.93	0.93	0.92	0.92	0.92
Adj. Flow (vph)	759	0	227	0	0	0	0	2516	224	147	1762	0
RTOR Reduction (vph)	0	0	31	0	0	0	0	10	0	0	0	0
Lane Group Flow (vph)	759	0	196	0	0	0	0	2730	0	147	1762	0
Turn Type	custom		custom							Prot		
Protected Phases								2		1	6	
Permitted Phases	4		4									
Actuated Green, G (s)	39.2		39.2					72.8		20.0	98.8	
Effective Green, g (s)	39.2		39.2					72.8		20.0	98.8	
Actuated g/C Ratio	0.26		0.26					0.49		0.13	0.66	
Clearance Time (s)	6.0		6.0					6.0		6.0	6.0	
Vehicle Extension (s)	3.0		3.0					3.0		3.0	3.0	
Lane Grp Cap (vph)	897		728					4072		458	3349	
v/s Ratio Prot								c0.33		0.04	c0.35	
v/s Ratio Perm	c0.22		0.07									
v/c Ratio	0.85		0.27					0.67		0.32	0.53	
Uniform Delay, d1	52.5		44.0					29.4		58.9	13.4	
Progression Factor	1.00		1.00					1.00		0.38	0.61	
Incremental Delay, d2	7.4		0.2					0.9		0.3	0.5	
Delay (s)	60.0		44.2					30.3		22.7	8.7	
Level of Service	E		D					C		C	A	
Approach Delay (s)		56.3			0.0			30.3			9.7	
Approach LOS		E			A			C			A	

Intersection Summary			
HCM Average Control Delay	27.9	HCM Level of Service	C
HCM Volume to Capacity ratio	0.68		
Actuated Cycle Length (s)	150.0	Sum of lost time (s)	12.0
Intersection Capacity Utilization	68.0%	ICU Level of Service	C
Analysis Period (min)	15		
c Critical Lane Group			

Movement	EBL	EBT	EBR	WBL	WBT	WBR	NBL	NBT	NBR	SBL	SBT	SBR
Lane Configurations												
Volume (vph)	180	0	50	30	0	50	60	2370	20	5	1790	175
Ideal Flow (vphpl)	1900	1900	1900	1900	1900	1900	1900	1900	1900	1900	1900	1900
Total Lost time (s)		6.0	6.0		6.0		6.0	6.0		6.0	6.0	
Lane Util. Factor		1.00	1.00		1.00		1.00	0.86		1.00	0.86	
Frt		1.00	0.85		0.92		1.00	1.00		1.00	0.99	
Flt Protected		0.95	1.00		0.98		0.95	1.00		0.95	1.00	
Satd. Flow (prot)		1770	1583		1674		1770	6400		1770	6322	
Flt Permitted		0.68	1.00		0.68		0.07	1.00		0.04	1.00	
Satd. Flow (perm)		1268	1583		1164		135	6400		68	6322	
Peak-hour factor, PHF	0.95	0.95	0.95	0.95	0.95	0.95	0.95	0.95	0.95	0.95	0.95	0.95
Adj. Flow (vph)	189	0	53	32	0	53	63	2495	21	5	1884	184
RTOR Reduction (vph)	0	0	0	0	0	0	0	1	0	0	9	0
Lane Group Flow (vph)	0	189	53	0	85	0	63	2515	0	5	2059	0
Turn Type	Perm		Perm	Perm			Perm			pm+pt		
Protected Phases		4			8			2		1	6	
Permitted Phases	4		4	8			2			6		
Actuated Green, G (s)		27.0	27.0		27.0		103.8	103.8		111.0	111.0	
Effective Green, g (s)		27.0	27.0		27.0		103.8	103.8		111.0	111.0	
Actuated g/C Ratio		0.18	0.18		0.18		0.69	0.69		0.74	0.74	
Clearance Time (s)		6.0	6.0		6.0		6.0	6.0		6.0	6.0	
Vehicle Extension (s)		3.0	3.0		3.0		3.0	3.0		3.0	3.0	
Lane Grp Cap (vph)		228	285		210		93	4429		64	4678	
v/s Ratio Prot								0.39		0.00	c0.33	
v/s Ratio Perm		c0.15	0.03		0.07		c0.47			0.06		
v/c Ratio		0.83	0.19		0.40		0.68	0.57		0.08	0.44	
Uniform Delay, d1		59.3	52.2		54.4		13.4	11.7		8.6	7.5	
Progression Factor		1.00	1.00		1.00		0.72	0.87		0.63	0.67	
Incremental Delay, d2		21.3	0.3		1.3		21.2	0.3		0.5	0.3	
Delay (s)		80.6	52.5		55.7		30.8	10.6		5.8	5.3	
Level of Service		F	D		E		C	B		A	A	
Approach Delay (s)		74.4			55.7			11.1			5.3	
Approach LOS		E			E			B			A	

Intersection Summary			
HCM Average Control Delay	12.5	HCM Level of Service	B
HCM Volume to Capacity ratio	0.72		
Actuated Cycle Length (s)	150.0	Sum of lost time (s)	18.0
Intersection Capacity Utilization	69.6%	ICU Level of Service	C
Analysis Period (min)	15		
c Critical Lane Group			

HCM Signalized Intersection Capacity Analysis
1: Rollins Ave & MD 355

4/4/2014

Movement	EBL	EBT	EBR	WBL	WBT	WBR	NBL	NBT	NBR	SBL	SBT	SBR
Lane Configurations												
Volume (vph)	0	364	81	0	289	137	106	1619	104	172	1841	68
Ideal Flow (vphpl)	1900	1900	1900	1900	1900	1900	1900	1900	1900	1900	1900	1900
Total Lost time (s)		6.0			6.0		6.0	6.0	6.0	6.0	6.0	
Lane Util. Factor		0.95			0.95		1.00	0.91	1.00	1.00	0.91	
Frt		0.97			0.95		1.00	1.00	0.85	1.00	0.99	
Flt Protected		1.00			1.00		0.95	1.00	1.00	0.95	1.00	
Satd. Flow (prot)		3443			3368		1770	5085	1583	1770	5058	
Flt Permitted		1.00			1.00		0.07	1.00	1.00	0.10	1.00	
Satd. Flow (perm)		3443			3368		129	5085	1583	180	5058	
Peak-hour factor, PHF	0.96	0.96	0.96	0.96	0.96	0.96	0.96	0.96	0.96	0.96	0.96	0.96
Adj. Flow (vph)	0	379	84	0	301	143	110	1686	108	179	1918	71
RTOR Reduction (vph)	0	0	0	0	0	0	0	0	40	0	2	0
Lane Group Flow (vph)	0	463	0	0	444	0	110	1686	68	179	1987	0
Turn Type							pm+pt		Perm	pm+pt		
Protected Phases		4			8		5	2		1	6	
Permitted Phases							2		2	6		
Actuated Green, G (s)		25.4			25.4		103.2	94.1	94.1	110.0	97.5	
Effective Green, g (s)		25.4			25.4		103.2	94.1	94.1	110.0	97.5	
Actuated g/C Ratio		0.17			0.17		0.69	0.63	0.63	0.73	0.65	
Clearance Time (s)		6.0			6.0		6.0	6.0	6.0	6.0	6.0	
Vehicle Extension (s)		3.0			3.0		3.0	3.0	3.0	3.0	3.0	
Lane Grp Cap (vph)		583			570		188	3190	993	265	3288	
v/s Ratio Prot		c0.13			0.13		0.04	0.33		c0.06	0.39	
v/s Ratio Perm							0.37		0.04	c0.44		
v/c Ratio		0.79			0.78		0.59	0.53	0.07	0.68	0.60	
Uniform Delay, d1		59.8			59.6		13.8	15.6	10.9	14.4	15.1	
Progression Factor		1.00			1.00		2.01	0.43	0.65	1.00	1.00	
Incremental Delay, d2		7.4			6.7		2.7	0.4	0.1	6.7	0.8	
Delay (s)		67.1			66.3		30.4	7.0	7.2	21.1	16.0	
Level of Service		E			E		C	A	A	C	B	
Approach Delay (s)		67.1			66.3			8.4			16.4	
Approach LOS		E			E			A			B	

Intersection Summary			
HCM Average Control Delay	22.5	HCM Level of Service	C
HCM Volume to Capacity ratio	0.72		
Actuated Cycle Length (s)	150.0	Sum of lost time (s)	18.0
Intersection Capacity Utilization	70.6%	ICU Level of Service	C
Analysis Period (min)	15		
c Critical Lane Group			

Movement	EBL	EBT	EBR	WBL	WBT	WBR	NBL	NBT	NBR	SBL	SBT	SBR
Lane Configurations												
Volume (vph)	44	24	76	464	19	143	91	1816	300	195	1816	12
Ideal Flow (vphpl)	1900	1900	1900	1900	1900	1900	1900	1900	1900	1900	1900	1900
Total Lost time (s)		6.0	6.0	6.0	6.0		6.0	6.0	6.0	6.0	6.0	
Lane Util. Factor		1.00	1.00	0.97	1.00		1.00	0.91	1.00	1.00	0.91	
Frt		1.00	0.85	1.00	0.87		1.00	1.00	0.85	1.00	1.00	
Flt Protected		0.97	1.00	0.95	1.00		0.95	1.00	1.00	0.95	1.00	
Satd. Flow (prot)		1804	1583	3433	1616		1770	5085	1583	1770	5080	
Flt Permitted		0.97	1.00	0.95	1.00		0.95	1.00	1.00	0.08	1.00	
Satd. Flow (perm)		1804	1583	3433	1616		1770	5085	1583	155	5080	
Peak-hour factor, PHF	0.95	0.95	0.95	0.95	0.95	0.95	0.95	0.95	0.95	0.95	0.95	0.95
Adj. Flow (vph)	46	25	80	488	20	151	96	1912	316	205	1912	13
RTOR Reduction (vph)	0	0	75	0	125	0	0	0	115	0	1	0
Lane Group Flow (vph)	0	71	5	488	46	0	96	1912	201	205	1924	0
Turn Type	Split		Perm	Split			Prot		Perm	pm+pt		
Protected Phases	4	4		8	8		5	2		1	6	
Permitted Phases			4						2	6		
Actuated Green, G (s)		9.3	9.3	25.5	25.5		20.2	68.2	68.2	71.0	71.0	
Effective Green, g (s)		9.3	9.3	25.5	25.5		20.2	68.2	68.2	71.0	71.0	
Actuated g/C Ratio		0.06	0.06	0.17	0.17		0.13	0.45	0.45	0.47	0.47	
Clearance Time (s)		6.0	6.0	6.0	6.0		6.0	6.0	6.0	6.0	6.0	
Vehicle Extension (s)		3.0	3.0	3.0	3.0		3.0	3.0	3.0	3.0	3.0	
Lane Grp Cap (vph)		112	98	584	275		238	2312	720	321	2405	
v/s Ratio Prot		c0.04		c0.14	0.03		0.05	c0.38		0.10	c0.38	
v/s Ratio Perm			0.00						0.13	0.20		
v/c Ratio		0.63	0.05	0.84	0.17		0.40	0.83	0.28	0.64	0.80	
Uniform Delay, d1		68.7	66.2	60.2	53.2		59.4	35.7	25.6	45.6	33.5	
Progression Factor		1.00	1.00	1.00	1.00		0.76	1.44	2.66	0.90	0.86	
Incremental Delay, d2		11.2	0.2	10.0	0.3		4.0	2.9	0.8	7.8	2.4	
Delay (s)		79.8	66.4	70.3	53.5		49.1	54.3	68.8	49.0	31.2	
Level of Service		E	E	E	D		D	D	E	D	C	
Approach Delay (s)		72.7			65.9			56.0			32.9	
Approach LOS		E			E			E			C	

Intersection Summary			
HCM Average Control Delay	48.4	HCM Level of Service	D
HCM Volume to Capacity ratio	0.79		
Actuated Cycle Length (s)	150.0	Sum of lost time (s)	18.0
Intersection Capacity Utilization	82.8%	ICU Level of Service	E
Analysis Period (min)	15		
c Critical Lane Group			

Movement	EBL	EBT	EBR	WBL	WBT	WBR	NBL	NBT	NBR	SBL	SBT	SBR
Lane Configurations												
Volume (vph)	33	9	34	260	8	170	52	2004	327	146	2234	19
Ideal Flow (vphpl)	1900	1900	1900	1900	1900	1900	1900	1900	1900	1900	1900	1900
Total Lost time (s)	6.0	6.0		6.0	6.0		6.0	6.0	6.0	6.0	6.0	
Lane Util. Factor	1.00	1.00		1.00	1.00		1.00	0.91	1.00	1.00	0.91	
Frt	1.00	0.88		1.00	0.86		1.00	1.00	0.85	1.00	1.00	
Flt Protected	0.95	1.00		0.95	1.00		0.95	1.00	1.00	0.95	1.00	
Satd. Flow (prot)	1770	1639		1770	1595		1770	5085	1583	1770	5079	
Flt Permitted	0.51	1.00		0.73	1.00		0.95	1.00	1.00	0.95	1.00	
Satd. Flow (perm)	959	1639		1356	1595		1770	5085	1583	1770	5079	
Peak-hour factor, PHF	0.95	0.95	0.95	0.95	0.95	0.95	0.95	0.95	0.95	0.95	0.95	0.95
Adj. Flow (vph)	35	9	36	274	8	179	55	2109	344	154	2352	20
RTOR Reduction (vph)	0	27	0	0	57	0	0	0	140	0	1	0
Lane Group Flow (vph)	35	18	0	274	130	0	55	2109	204	154	2371	0
Turn Type	Perm			Perm			Prot		Perm	Prot		
Protected Phases		4			8		5	2		1	6	
Permitted Phases	4			8					2			
Actuated Green, G (s)	36.6	36.6		36.6	36.6		5.6	88.9	88.9	6.5	89.8	
Effective Green, g (s)	36.6	36.6		36.6	36.6		5.6	88.9	88.9	6.5	89.8	
Actuated g/C Ratio	0.24	0.24		0.24	0.24		0.04	0.59	0.59	0.04	0.60	
Clearance Time (s)	6.0	6.0		6.0	6.0		6.0	6.0	6.0	6.0	6.0	
Vehicle Extension (s)	3.0	3.0		3.0	3.0		3.0	3.0	3.0	3.0	3.0	
Lane Grp Cap (vph)	234	400		331	389		66	3014	938	77	3041	
v/s Ratio Prot		0.01			0.08		0.03	0.41		c0.09	c0.47	
v/s Ratio Perm	0.04			c0.20					0.13			
v/c Ratio	0.15	0.04		0.83	0.33		0.83	0.70	0.22	2.00	0.78	
Uniform Delay, d1	44.5	43.3		53.7	46.7		71.7	21.3	14.3	71.8	22.7	
Progression Factor	1.00	1.00		1.00	1.00		0.89	1.17	7.12	0.85	1.53	
Incremental Delay, d2	0.3	0.0		15.5	0.5		53.6	1.3	0.5	477.3	1.3	
Delay (s)	44.8	43.4		69.2	47.2		117.1	26.2	102.2	538.2	35.9	
Level of Service	D	D		E	D		F	C	F	F	D	
Approach Delay (s)		44.0			60.3			38.6			66.5	
Approach LOS		D			E			D			E	

Intersection Summary			
HCM Average Control Delay	53.1	HCM Level of Service	D
HCM Volume to Capacity ratio	0.82		
Actuated Cycle Length (s)	150.0	Sum of lost time (s)	12.0
Intersection Capacity Utilization	84.7%	ICU Level of Service	E
Analysis Period (min)	15		
c Critical Lane Group			

Intersection Sign configuration not allowed in HCM analysis.

Movement	EBL	EBT	EBR	WBL	WBT	WBR	NBL	NBT	NBR	SBL	SBT	SBR
Lane Configurations												
Volume (vph)	149	578	0	0	683	236	31	2	312	0	0	0
Ideal Flow (vphpl)	1900	1900	1900	1900	1900	1900	1900	1900	1900	1900	1900	1900
Lane Width	11	11	11	11	11	11	11	11	11	11	11	11
Total Lost time (s)	6.0	6.0			6.0	6.0		6.0	6.0			
Lane Util. Factor	0.97	0.95			0.95	1.00		1.00	0.88			
Frt	1.00	1.00			1.00	0.85		1.00	0.85			
Flt Protected	0.95	1.00			1.00	1.00		0.95	1.00			
Satd. Flow (prot)	3319	3421			3421	1531		1719	2694			
Flt Permitted	0.95	1.00			1.00	1.00		0.95	1.00			
Satd. Flow (perm)	3319	3421			3421	1531		1719	2694			
Peak-hour factor, PHF	0.92	0.92	0.92	0.92	0.92	0.92	0.92	0.92	0.92	0.92	0.92	0.92
Adj. Flow (vph)	162	628	0	0	742	257	34	2	339	0	0	0
RTOR Reduction (vph)	0	0	0	0	0	68	0	0	319	0	0	0
Lane Group Flow (vph)	162	628	0	0	742	189	0	36	20	0	0	0
Turn Type	Prot					Perm	Split		Prot			
Protected Phases	1	6			2		4	4	4			
Permitted Phases						2						
Actuated Green, G (s)	12.7	129.2			110.5	110.5		8.8	8.8			
Effective Green, g (s)	12.7	129.2			110.5	110.5		8.8	8.8			
Actuated g/C Ratio	0.08	0.86			0.74	0.74		0.06	0.06			
Clearance Time (s)	6.0	6.0			6.0	6.0		6.0	6.0			
Vehicle Extension (s)	3.0	3.0			3.0	3.0		3.0	3.0			
Lane Grp Cap (vph)	281	2947			2520	1128		101	158			
v/s Ratio Prot	c0.05	0.18			c0.22			c0.02	0.01			
v/s Ratio Perm						0.12						
v/c Ratio	0.58	0.21			0.29	0.17		0.36	0.13			
Uniform Delay, d1	66.1	1.8			6.6	5.9		67.9	67.0			
Progression Factor	0.90	2.87			2.73	12.44		0.88	2.45			
Incremental Delay, d2	2.7	0.2			0.3	0.3		2.0	0.3			
Delay (s)	62.3	5.2			18.4	74.1		61.5	164.2			
Level of Service	E	A			B	E		E	F			
Approach Delay (s)		16.9			32.7			154.4			0.0	
Approach LOS		B			C			F			A	

Intersection Summary			
HCM Average Control Delay	48.0	HCM Level of Service	D
HCM Volume to Capacity ratio	0.33		
Actuated Cycle Length (s)	150.0	Sum of lost time (s)	18.0
Intersection Capacity Utilization	41.5%	ICU Level of Service	A
Analysis Period (min)	15		

c Critical Lane Group

Movement	EBL	EBT	EBR	WBL	WBT	WBR	NBL	NBT	NBR	SBL	SBT	SBR
Lane Configurations												
Volume (vph)	550	113	197	65	150	59	191	1526	29	110	1563	476
Ideal Flow (vphpl)	1900	1900	1900	1900	1900	1900	1900	1900	1900	1900	1900	1900
Total Lost time (s)	6.0	6.0	6.0	6.0	6.0	6.0	6.0	6.0		6.0	6.0	6.0
Lane Util. Factor	0.91	0.91	1.00	1.00	1.00	1.00	1.00	0.91		1.00	0.91	1.00
Frt	1.00	1.00	0.85	1.00	1.00	0.85	1.00	1.00		1.00	1.00	0.85
Flt Protected	0.95	0.98	1.00	0.95	1.00	1.00	0.95	1.00		0.95	1.00	1.00
Satd. Flow (prot)	3221	1654	1583	1770	1863	1583	1770	5071		1770	5085	1583
Flt Permitted	0.95	0.98	1.00	0.95	1.00	1.00	0.95	1.00		0.09	1.00	1.00
Satd. Flow (perm)	3221	1654	1583	1770	1863	1583	1770	5071		167	5085	1583
Peak-hour factor, PHF	0.95	0.95	0.95	0.95	0.95	0.95	0.95	0.95	0.95	0.95	0.95	0.95
Adj. Flow (vph)	579	119	207	68	158	62	201	1606	31	116	1645	501
RTOR Reduction (vph)	0	0	172	0	0	55	0	1	0	0	0	205
Lane Group Flow (vph)	463	235	35	68	158	7	201	1636	0	116	1645	296
Turn Type	Split		Perm	Split		Perm	Prot			pm+pt		Perm
Protected Phases	4	4		8	8		5	2		1	6	
Permitted Phases			4			8				6		6
Actuated Green, G (s)	25.7	25.7	25.7	17.5	17.5	17.5	20.5	72.5		72.6	62.3	62.3
Effective Green, g (s)	25.7	25.7	25.7	17.5	17.5	17.5	20.5	72.5		72.6	62.3	62.3
Actuated g/C Ratio	0.17	0.17	0.17	0.12	0.12	0.12	0.14	0.48		0.48	0.42	0.42
Clearance Time (s)	6.0	6.0	6.0	6.0	6.0	6.0	6.0	6.0		6.0	6.0	6.0
Vehicle Extension (s)	3.0	3.0	3.0	3.0	3.0	3.0	3.0	3.0		3.0	3.0	3.0
Lane Grp Cap (vph)	552	283	271	207	217	185	242	2451		191	2112	657
v/s Ratio Prot	c0.14	0.14		0.04	c0.08		c0.11	0.32		0.04	c0.32	
v/s Ratio Perm			0.02			0.00				0.25		0.19
v/c Ratio	0.84	0.83	0.13	0.33	0.73	0.04	0.83	0.67		0.61	0.78	0.45
Uniform Delay, d1	60.1	60.0	52.7	60.9	64.0	58.8	63.1	29.6		24.4	37.9	31.5
Progression Factor	0.71	0.72	1.37	1.06	1.06	1.93	0.76	1.18		1.20	1.44	3.01
Incremental Delay, d2	10.6	18.1	0.2	0.9	11.1	0.1	18.9	1.3		4.8	2.6	2.0
Delay (s)	53.1	61.2	72.5	65.7	79.1	113.4	67.1	36.1		34.1	57.1	97.0
Level of Service	D	E	E	E	E	F	E	D		C	E	F
Approach Delay (s)		59.7			83.3			39.5			64.7	
Approach LOS		E			F			D			E	

Intersection Summary			
HCM Average Control Delay	56.1	HCM Level of Service	E
HCM Volume to Capacity ratio	0.79		
Actuated Cycle Length (s)	150.0	Sum of lost time (s)	24.0
Intersection Capacity Utilization	80.8%	ICU Level of Service	D
Analysis Period (min)	15		
c Critical Lane Group			

Movement	EBL	EBT	EBR	WBL	WBT	WBR	NBL	NBT	NBR	SBL	SBT	SBR
Lane Configurations												
Volume (vph)	94	44	63	47	31	40	61	1772	38	69	1711	70
Ideal Flow (vphpl)	1900	1900	1900	1900	1900	1900	1900	1900	1900	1900	1900	1900
Total Lost time (s)	6.0	6.0		6.0	6.0	6.0	6.0	6.0	6.0	6.0	6.0	6.0
Lane Util. Factor	1.00	0.95		1.00	0.95	1.00	1.00	0.91	1.00	1.00	0.91	1.00
Frt	1.00	0.91		1.00	1.00	0.85	1.00	1.00	0.85	1.00	1.00	0.85
Flt Protected	0.95	1.00		0.95	1.00	1.00	0.95	1.00	1.00	0.95	1.00	1.00
Satd. Flow (prot)	1770	3226		1770	3539	1583	1770	5085	1583	1770	5085	1583
Flt Permitted	0.73	1.00		0.68	1.00	1.00	0.11	1.00	1.00	0.09	1.00	1.00
Satd. Flow (perm)	1368	3226		1269	3539	1583	198	5085	1583	172	5085	1583
Peak-hour factor, PHF	0.95	0.95	0.95	0.95	0.95	0.95	0.95	0.95	0.95	0.95	0.95	0.95
Adj. Flow (vph)	99	46	66	49	33	42	64	1865	40	73	1801	74
RTOR Reduction (vph)	0	32	0	0	0	37	0	0	11	0	0	14
Lane Group Flow (vph)	99	80	0	49	33	5	64	1865	29	73	1801	60
Turn Type	Perm			Perm		Perm	Perm		Perm	pm+pt		Perm
Protected Phases		4			8			2		1	6	
Permitted Phases	4			8		8	2		2	6		6
Actuated Green, G (s)	16.2	16.2		16.2	16.2	16.2	110.3	110.3	110.3	121.8	121.8	121.8
Effective Green, g (s)	16.2	16.2		16.2	16.2	16.2	110.3	110.3	110.3	121.8	121.8	121.8
Actuated g/C Ratio	0.11	0.11		0.11	0.11	0.11	0.74	0.74	0.74	0.81	0.81	0.81
Clearance Time (s)	6.0	6.0		6.0	6.0	6.0	6.0	6.0	6.0	6.0	6.0	6.0
Vehicle Extension (s)	3.0	3.0		3.0	3.0	3.0	3.0	3.0	3.0	3.0	3.0	3.0
Lane Grp Cap (vph)	148	348		137	382	171	146	3739	1164	198	4129	1285
v/s Ratio Prot		0.02			0.01			c0.37		0.01	c0.35	
v/s Ratio Perm	c0.07			0.04		0.00	0.32		0.02	0.29		0.04
v/c Ratio	0.67	0.23		0.36	0.09	0.03	0.44	0.50	0.03	0.37	0.44	0.05
Uniform Delay, d1	64.3	61.2		62.1	60.2	59.8	7.8	8.3	5.4	11.2	4.1	2.8
Progression Factor	0.88	0.81		0.96	0.97	1.36	2.33	2.12	3.71	1.18	0.75	0.44
Incremental Delay, d2	10.9	0.3		1.5	0.1	0.1	5.7	0.3	0.0	0.8	0.2	0.0
Delay (s)	67.3	50.1		61.2	58.4	81.5	23.8	17.9	19.9	14.0	3.3	1.2
Level of Service	E	D		E	E	F	C	B	B	B	A	A
Approach Delay (s)		58.2			67.4			18.1			3.6	
Approach LOS		E			E			B			A	

Intersection Summary			
HCM Average Control Delay	14.9	HCM Level of Service	B
HCM Volume to Capacity ratio	0.50		
Actuated Cycle Length (s)	150.0	Sum of lost time (s)	12.0
Intersection Capacity Utilization	64.9%	ICU Level of Service	C
Analysis Period (min)	15		
c Critical Lane Group			

Movement	EBL	EBT	EBR	WBL	WBT	WBR	NBL	NBT	NBR	SBL	SBT	SBR
Lane Configurations												
Volume (vph)	93	337	104	428	386	280	83	1499	378	275	1465	34
Ideal Flow (vphpl)	1900	1900	1900	1900	1900	1900	1900	1900	1900	1900	1900	1900
Total Lost time (s)		6.0	6.0	6.0	6.0	6.0	6.0	6.0	6.0	6.0	6.0	6.0
Lane Util. Factor		0.95	1.00	0.97	0.95	1.00	1.00	0.91	1.00	1.00	0.91	1.00
Frt		1.00	0.85	1.00	1.00	0.85	1.00	1.00	0.85	1.00	1.00	0.85
Flt Protected		0.99	1.00	0.95	1.00	1.00	0.95	1.00	1.00	0.95	1.00	1.00
Satd. Flow (prot)		3501	1583	3433	3539	1583	1770	5085	1583	1770	5085	1583
Flt Permitted		0.99	1.00	0.95	1.00	1.00	0.95	1.00	1.00	0.07	1.00	1.00
Satd. Flow (perm)		3501	1583	3433	3539	1583	1770	5085	1583	124	5085	1583
Peak-hour factor, PHF	0.95	0.95	0.95	0.95	0.95	0.95	0.95	0.95	0.95	0.95	0.95	0.95
Adj. Flow (vph)	98	355	109	451	406	295	87	1578	398	289	1542	36
RTOR Reduction (vph)	0	0	93	0	0	206	0	0	16	0	0	16
Lane Group Flow (vph)	0	453	16	451	406	89	87	1578	382	289	1542	20
Turn Type	Split		Perm	Split		Perm	Prot		pm+ov	pm+pt		Perm
Protected Phases	4	4		8	8		5	2	8	1	6	
Permitted Phases			4			8			2	6		6
Actuated Green, G (s)		22.1	22.1	29.9	29.9	29.9	11.1	54.1	84.0	80.0	62.9	62.9
Effective Green, g (s)		22.1	22.1	29.9	29.9	29.9	11.1	54.1	84.0	80.0	62.9	62.9
Actuated g/C Ratio		0.15	0.15	0.20	0.20	0.20	0.07	0.36	0.56	0.53	0.42	0.42
Clearance Time (s)		6.0	6.0	6.0	6.0	6.0	6.0	6.0	6.0	6.0	6.0	6.0
Vehicle Extension (s)		3.0	3.0	3.0	3.0	3.0	3.0	3.0	3.0	3.0	3.0	3.0
Lane Grp Cap (vph)		516	233	684	705	316	131	1834	886	285	2132	664
v/s Ratio Prot		c0.13		c0.13	0.11		0.05	0.31	0.09	c0.13	0.30	
v/s Ratio Perm			0.01			0.06			0.16	c0.41		0.01
v/c Ratio		0.88	0.07	0.66	0.58	0.28	0.66	0.86	0.43	1.01	0.72	0.03
Uniform Delay, d1		62.6	55.1	55.4	54.3	50.9	67.6	44.4	19.1	49.9	36.3	25.6
Progression Factor		0.86	2.72	0.52	0.51	0.50	1.47	0.35	0.69	1.42	0.63	0.16
Incremental Delay, d2		15.3	0.1	2.2	1.1	0.5	10.8	5.0	0.3	54.9	2.0	0.1
Delay (s)		69.1	150.2	31.2	29.0	26.0	110.2	20.6	13.5	125.8	25.0	4.3
Level of Service		E	F	C	C	C	F	C	B	F	C	A
Approach Delay (s)		84.8			29.1			23.0			40.2	
Approach LOS		F			C			C			D	

Intersection Summary			
HCM Average Control Delay	36.1	HCM Level of Service	D
HCM Volume to Capacity ratio	0.89		
Actuated Cycle Length (s)	150.0	Sum of lost time (s)	18.0
Intersection Capacity Utilization	88.4%	ICU Level of Service	E
Analysis Period (min)	15		
c Critical Lane Group			

Movement	EBL	EBT	EBR	WBL	WBT	WBR	NBL	NBT	NBR	SBL	SBT	SBR
Lane Configurations												
Volume (vph)	34	33	28	0	0	0	84	1852	165	231	1735	31
Ideal Flow (vphpl)	1900	1900	1900	1900	1900	1900	1900	1900	1900	1900	1900	1900
Total Lost time (s)		6.0	6.0				6.0	6.0		6.0	6.0	6.0
Lane Util. Factor		1.00	1.00				1.00	0.86		1.00	0.91	1.00
Frt		1.00	0.85				1.00	0.99		1.00	1.00	0.85
Flt Protected		0.98	1.00				0.95	1.00		0.95	1.00	1.00
Satd. Flow (prot)		1817	1583				1770	6329		1770	5085	1583
Flt Permitted		0.98	1.00				0.11	1.00		0.95	1.00	1.00
Satd. Flow (perm)		1817	1583				213	6329		1770	5085	1583
Peak-hour factor, PHF	0.95	0.95	0.95	0.95	0.95	0.95	0.95	0.95	0.95	0.95	0.95	0.95
Adj. Flow (vph)	36	35	29	0	0	0	88	1949	174	243	1826	33
RTOR Reduction (vph)	0	0	27	0	0	0	0	14	0	0	0	8
Lane Group Flow (vph)	0	71	2	0	0	0	88	2109	0	243	1826	25
Turn Type	Perm		Perm				pm+pt			Prot		Perm
Protected Phases		4					5	2		1	6	
Permitted Phases	4		4				2					6
Actuated Green, G (s)		11.2	11.2				83.9	77.1		43.7	114.0	114.0
Effective Green, g (s)		11.2	11.2				83.9	77.1		43.7	114.0	114.0
Actuated g/C Ratio		0.07	0.07				0.56	0.51		0.29	0.76	0.76
Clearance Time (s)		6.0	6.0				6.0	6.0		6.0	6.0	6.0
Vehicle Extension (s)		3.0	3.0				3.0	3.0		3.0	3.0	3.0
Lane Grp Cap (vph)		136	118				190	3253		516	3865	1203
v/s Ratio Prot							0.02	c0.33		c0.14	c0.36	
v/s Ratio Perm		0.04	0.00				0.24					0.02
v/c Ratio		0.52	0.02				0.46	0.65		0.47	0.47	0.02
Uniform Delay, d1		66.8	64.3				24.8	26.6		43.7	6.7	4.4
Progression Factor		1.00	1.00				0.88	1.13		1.12	0.71	0.98
Incremental Delay, d2		3.6	0.1				1.6	0.9		0.5	0.3	0.0
Delay (s)		70.4	64.4				23.5	30.9		49.4	5.1	4.3
Level of Service		E	E				C	C		D	A	A
Approach Delay (s)		68.7			0.0			30.6			10.2	
Approach LOS		E			A			C			B	

Intersection Summary			
HCM Average Control Delay	21.8	HCM Level of Service	C
HCM Volume to Capacity ratio	0.61		
Actuated Cycle Length (s)	150.0	Sum of lost time (s)	24.0
Intersection Capacity Utilization	61.0%	ICU Level of Service	B
Analysis Period (min)	15		
c Critical Lane Group			

Movement	EBL	EBT	EBR	WBL	WBT	WBR	NBL	NBT	NBR	SBL	SBT	SBR
Lane Configurations												
Volume (vph)	92	0	166	250	0	99	71	1866	333	28	1756	42
Ideal Flow (vphpl)	1900	1900	1900	1900	1900	1900	1900	1900	1900	1900	1900	1900
Total Lost time (s)	6.0		6.0	6.0		6.0	6.0	6.0	6.0	6.0	6.0	
Lane Util. Factor	1.00		1.00	0.97		1.00	1.00	0.91	1.00	1.00	0.91	
Frt	1.00		0.85	1.00		0.85	1.00	1.00	0.85	1.00	1.00	
Flt Protected	0.95		1.00	0.95		1.00	0.95	1.00	1.00	0.95	1.00	
Satd. Flow (prot)	1770		1583	3433		1583	1770	5085	1583	1770	5068	
Flt Permitted	0.95		1.00	0.95		1.00	0.95	1.00	1.00	0.95	1.00	
Satd. Flow (perm)	1770		1583	3433		1583	1770	5085	1583	1770	5068	
Peak-hour factor, PHF	0.95	0.95	0.95	0.95	0.95	0.95	0.95	0.95	0.95	0.95	0.95	0.95
Adj. Flow (vph)	97	0	175	263	0	104	75	1964	351	29	1848	44
RTOR Reduction (vph)	0	0	8	0	0	92	0	0	94	0	1	0
Lane Group Flow (vph)	97	0	167	263	0	12	75	1964	257	29	1891	0
Turn Type	custom		custom	custom		custom	Prot		Perm	Prot		
Protected Phases			5				5	2		1	6	
Permitted Phases	4		4	8		8			2			
Actuated Green, G (s)	16.8		28.3	16.8		16.8	11.5	109.7	109.7	5.5	103.7	
Effective Green, g (s)	16.8		28.3	16.8		16.8	11.5	109.7	109.7	5.5	103.7	
Actuated g/C Ratio	0.11		0.19	0.11		0.11	0.08	0.73	0.73	0.04	0.69	
Clearance Time (s)	6.0		6.0	6.0		6.0	6.0	6.0	6.0	6.0	6.0	
Vehicle Extension (s)	3.0		3.0	3.0		3.0	3.0	3.0	3.0	3.0	3.0	
Lane Grp Cap (vph)	198		362	384		177	136	3719	1158	65	3504	
v/s Ratio Prot			c0.04				0.04	c0.39		0.02	0.37	
v/s Ratio Perm	0.05		0.07	c0.08		0.01			0.16			
v/c Ratio	0.49		0.46	0.68		0.07	0.55	0.53	0.22	0.45	0.54	
Uniform Delay, d1	62.6		54.1	64.1		59.6	66.8	8.8	6.5	70.8	11.4	
Progression Factor	1.00		1.00	1.00		1.00	0.55	2.66	12.35	0.96	0.43	
Incremental Delay, d2	1.9		0.9	5.0		0.2	2.7	0.3	0.2	4.4	0.5	
Delay (s)	64.5		55.0	69.1		59.7	39.3	23.7	80.0	72.5	5.5	
Level of Service	E		E	E		E	D	C	F	E	A	
Approach Delay (s)		58.4			66.4			32.5			6.5	
Approach LOS		E			E			C			A	

Intersection Summary			
HCM Average Control Delay	26.3	HCM Level of Service	C
HCM Volume to Capacity ratio	0.54		
Actuated Cycle Length (s)	150.0	Sum of lost time (s)	12.0
Intersection Capacity Utilization	65.6%	ICU Level of Service	C
Analysis Period (min)	15		
c Critical Lane Group			

Movement	EBL	EBT	EBR	WBL	WBT	WBR	NBL	NBT	NBR	SBL	SBT	SBR
Lane Configurations												
Volume (vph)	34	17	83	287	9	286	60	1890	236	275	1820	10
Ideal Flow (vphpl)	1900	1900	1900	1900	1900	1900	1900	1900	1900	1900	1900	1900
Total Lost time (s)		6.0	6.0	6.0	6.0	6.0	6.0	6.0	6.0	6.0	6.0	
Lane Util. Factor		1.00	1.00	0.95	0.95	1.00	1.00	0.91	1.00	1.00	0.91	
Frt		1.00	0.85	1.00	1.00	0.85	1.00	1.00	0.85	1.00	1.00	
Flt Protected		0.97	1.00	0.95	0.95	1.00	0.95	1.00	1.00	0.95	1.00	
Satd. Flow (prot)		1803	1583	1681	1690	1583	1770	5085	1583	1770	5081	
Flt Permitted		0.97	1.00	0.95	0.95	1.00	0.09	1.00	1.00	0.08	1.00	
Satd. Flow (perm)		1803	1583	1681	1690	1583	165	5085	1583	152	5081	
Peak-hour factor, PHF	0.95	0.95	0.95	0.95	0.95	0.95	0.95	0.95	0.95	0.95	0.95	0.95
Adj. Flow (vph)	36	18	87	302	9	301	63	1989	248	289	1916	11
RTOR Reduction (vph)	0	0	80	0	0	238	0	0	138	0	0	0
Lane Group Flow (vph)	0	54	7	154	157	63	63	1989	110	289	1927	0
Turn Type	Split		Perm	Split		Perm	pm+pt		Perm	pm+pt		
Protected Phases	4	4		8	8		5	2		1	6	
Permitted Phases			4			8	2		2	6		
Actuated Green, G (s)		11.3	11.3	19.8	19.8	19.8	66.6	66.6	66.6	77.3	77.3	
Effective Green, g (s)		11.3	11.3	19.8	19.8	19.8	66.6	66.6	66.6	77.3	77.3	
Actuated g/C Ratio		0.08	0.08	0.13	0.13	0.13	0.44	0.44	0.44	0.52	0.52	
Clearance Time (s)		6.0	6.0	6.0	6.0	6.0	6.0	6.0	6.0	6.0	6.0	
Vehicle Extension (s)		3.0	3.0	3.0	3.0	3.0	3.0	3.0	3.0	3.0	3.0	
Lane Grp Cap (vph)		136	119	222	223	209	262	2258	703	384	2618	
v/s Ratio Prot		c0.03		0.09	c0.09		0.03	c0.39		0.14	c0.38	
v/s Ratio Perm			0.00			0.04	0.08		0.07	0.25		
v/c Ratio		0.40	0.06	0.69	0.70	0.30	0.24	0.88	0.16	0.75	0.74	
Uniform Delay, d1		66.1	64.4	62.2	62.3	58.9	39.9	38.1	24.9	42.9	28.4	
Progression Factor		1.00	1.00	1.00	1.00	1.00	0.47	0.44	0.39	1.12	1.35	
Incremental Delay, d2		1.9	0.2	9.0	9.7	0.8	0.3	3.8	0.3	7.1	1.7	
Delay (s)		68.0	64.6	71.2	72.0	59.7	19.0	20.4	10.0	55.1	40.0	
Level of Service		E	E	E	E	E	B	C	A	E	D	
Approach Delay (s)		65.9			65.7			19.2			42.0	
Approach LOS		E			E			B			D	

Intersection Summary			
HCM Average Control Delay	35.5	HCM Level of Service	D
HCM Volume to Capacity ratio	0.80		
Actuated Cycle Length (s)	150.0	Sum of lost time (s)	24.0
Intersection Capacity Utilization	81.6%	ICU Level of Service	D
Analysis Period (min)	15		
c Critical Lane Group			

Movement	EBL	EBT	EBR	WBL	WBT	WBR	NBL	NBT	NBR	SBL	SBT	SBR
Lane Configurations												
Volume (vph)	403	107	126	22	97	114	139	1540	27	127	1313	517
Ideal Flow (vphpl)	1900	1900	1900	1900	1900	1900	1900	1900	1900	1900	1900	1900
Total Lost time (s)	6.0	6.0	6.0	6.0	6.0	6.0	6.0	6.0		6.0	6.0	6.0
Lane Util. Factor	0.91	0.91	1.00	0.91	0.91	1.00	1.00	0.91		1.00	0.91	1.00
Frt	1.00	1.00	0.85	1.00	1.00	0.85	1.00	1.00		1.00	1.00	0.85
Flt Protected	0.95	0.97	1.00	0.95	1.00	1.00	0.95	1.00		0.95	1.00	1.00
Satd. Flow (prot)	1610	3283	1583	1610	3387	1583	1770	5072		1770	5085	1583
Flt Permitted	0.95	0.97	1.00	0.95	1.00	1.00	0.95	1.00		0.09	1.00	1.00
Satd. Flow (perm)	1610	3283	1583	1610	3387	1583	1770	5072		162	5085	1583
Peak-hour factor, PHF	0.92	0.92	0.92	0.92	0.92	0.92	0.92	0.92	0.92	0.92	0.92	0.92
Adj. Flow (vph)	438	116	137	24	105	124	151	1674	29	138	1427	562
RTOR Reduction (vph)	0	0	112	0	0	114	0	1	0	0	0	302
Lane Group Flow (vph)	219	335	25	22	107	10	151	1702	0	138	1427	260
Turn Type	Split		Perm	Split		Perm	Prot			pm+pt		Perm
Protected Phases	4	4		8	8		5	2		1	6	
Permitted Phases			4			8				6		6
Actuated Green, G (s)	27.0	27.0	27.0	11.7	11.7	11.7	18.0	64.3		69.3	69.3	69.3
Effective Green, g (s)	27.0	27.0	27.0	11.7	11.7	11.7	18.0	64.3		69.3	69.3	69.3
Actuated g/C Ratio	0.18	0.18	0.18	0.08	0.08	0.08	0.12	0.43		0.46	0.46	0.46
Clearance Time (s)	6.0	6.0	6.0	6.0	6.0	6.0	6.0	6.0		6.0	6.0	6.0
Vehicle Extension (s)	3.0	3.0	3.0	3.0	3.0	3.0	3.0	3.0		3.0	3.0	3.0
Lane Grp Cap (vph)	290	591	285	126	264	123	212	2174		321	2349	731
v/s Ratio Prot	c0.14	0.10		0.01	c0.03		0.09	c0.34		0.07	c0.28	
v/s Ratio Perm			0.02			0.01				0.13		0.16
v/c Ratio	0.76	0.57	0.09	0.17	0.41	0.08	0.71	0.78		0.43	0.61	0.36
Uniform Delay, d1	58.4	56.2	51.2	64.6	65.8	64.1	63.5	36.8		42.3	30.2	26.0
Progression Factor	1.00	1.00	1.00	1.00	1.00	1.00	1.00	1.00		0.60	0.43	1.26
Incremental Delay, d2	10.6	1.3	0.1	0.7	1.0	0.3	10.8	2.9		0.7	0.8	1.0
Delay (s)	69.0	57.4	51.4	65.3	66.9	64.4	74.3	39.7		26.2	13.9	33.8
Level of Service	E	E	D	E	E	E	E	D		C	B	C
Approach Delay (s)		59.9			65.5			42.6			20.0	
Approach LOS		E			E			D			B	

Intersection Summary			
HCM Average Control Delay	36.4	HCM Level of Service	D
HCM Volume to Capacity ratio	0.69		
Actuated Cycle Length (s)	150.0	Sum of lost time (s)	18.0
Intersection Capacity Utilization	70.2%	ICU Level of Service	C
Analysis Period (min)	15		
c Critical Lane Group			

Movement	EBL	EBT	WBT	WBR	SBL	SBR
Lane Configurations						
Volume (vph)	1117	971	809	9	0	1092
Ideal Flow (vphpl)	1900	1900	1900	1900	1900	1900
Total Lost time (s)	6.0	4.0	6.0	6.0		4.0
Lane Util. Factor	0.94	0.95	0.95	1.00		1.00
Frt	1.00	1.00	1.00	0.85		0.86
Flt Protected	0.95	1.00	1.00	1.00		1.00
Satd. Flow (prot)	4990	3539	3539	1583		1611
Flt Permitted	0.95	1.00	1.00	1.00		1.00
Satd. Flow (perm)	4990	3539	3539	1583		1611
Peak-hour factor, PHF	0.92	0.92	0.92	0.92	0.92	0.92
Adj. Flow (vph)	1214	1055	879	10	0	1187
RTOR Reduction (vph)	0	0	0	5	0	0
Lane Group Flow (vph)	1214	1055	879	5	0	1187
Turn Type	Prot			Perm		Free
Protected Phases	1		2			
Permitted Phases		Free		2		Free
Actuated Green, G (s)	68.0	150.0	70.0	70.0		150.0
Effective Green, g (s)	68.0	150.0	70.0	70.0		150.0
Actuated g/C Ratio	0.45	1.00	0.47	0.47		1.00
Clearance Time (s)	6.0		6.0	6.0		
Lane Grp Cap (vph)	2262	3539	1652	739		1611
v/s Ratio Prot	0.24		0.25			
v/s Ratio Perm		0.30		0.00		c0.74
v/c Ratio	0.54	0.30	0.53	0.01		0.74
Uniform Delay, d1	29.6	0.0	28.4	21.4		0.0
Progression Factor	1.00	1.00	1.14	1.17		1.00
Incremental Delay, d2	0.9	0.2	1.2	0.0		2.9
Delay (s)	30.5	0.2	33.5	25.0		2.9
Level of Service	C	A	C	C		A
Approach Delay (s)		16.4	33.4		2.9	
Approach LOS		B	C		A	

Intersection Summary			
HCM Average Control Delay	16.2	HCM Level of Service	B
HCM Volume to Capacity ratio	0.74		
Actuated Cycle Length (s)	150.0	Sum of lost time (s)	0.0
Intersection Capacity Utilization	53.6%	ICU Level of Service	A
Analysis Period (min)	15		

c Critical Lane Group

Movement	EBL	EBT	EBR	WBL	WBT	WBR	NBL	NBT	NBR	SBL	SBT	SBR
Lane Configurations												
Volume (vph)	565	238	58	53	337	72	63	350	47	60	269	598
Ideal Flow (vphpl)	1900	1900	1900	1900	1900	1900	1900	1900	1900	1900	1900	1900
Total Lost time (s)	6.0	6.0	4.0	6.0	6.0		6.0	6.0		6.0	6.0	6.0
Lane Util. Factor	0.97	0.95	1.00	1.00	0.95		1.00	0.95		1.00	0.95	0.88
Frt	1.00	1.00	0.85	1.00	0.97		1.00	0.98		1.00	1.00	0.85
Flt Protected	0.95	1.00	1.00	0.95	1.00		0.95	1.00		0.95	1.00	1.00
Satd. Flow (prot)	3433	3539	1583	1770	3446		1770	3476		1770	3539	2787
Flt Permitted	0.95	1.00	1.00	0.95	1.00		0.95	1.00		0.95	1.00	1.00
Satd. Flow (perm)	3433	3539	1583	1770	3446		1770	3476		1770	3539	2787
Peak-hour factor, PHF	0.92	0.92	0.92	1.00	1.00	1.00	0.92	0.92	0.92	0.92	0.92	0.92
Adj. Flow (vph)	614	259	63	53	337	72	68	380	51	65	292	650
RTOR Reduction (vph)	0	0	0	0	10	0	0	7	0	0	0	384
Lane Group Flow (vph)	614	259	63	53	399	0	68	424	0	65	292	266
Turn Type	Prot		Free	Prot			Split			Split		pt+ov
Protected Phases	1	6		5	2		4	4		8	8	8 1
Permitted Phases			Free									
Actuated Green, G (s)	35.4	26.6	150.0	57.3	48.5		22.1	22.1		20.0	20.0	61.4
Effective Green, g (s)	35.4	26.6	150.0	57.3	48.5		22.1	22.1		20.0	20.0	61.4
Actuated g/C Ratio	0.24	0.18	1.00	0.38	0.32		0.15	0.15		0.13	0.13	0.41
Clearance Time (s)	6.0	6.0		6.0	6.0		6.0	6.0		6.0	6.0	
Vehicle Extension (s)	3.0	3.0		3.0	3.0		3.0	3.0		3.0	3.0	
Lane Grp Cap (vph)	810	628	1583	676	1114		261	512		236	472	1141
v/s Ratio Prot	c0.18	0.07		0.03	c0.12		0.04	c0.12		0.04	c0.08	0.10
v/s Ratio Perm			0.04									
v/c Ratio	0.76	0.41	0.04	0.08	0.36		0.26	0.83		0.28	0.62	0.23
Uniform Delay, d1	53.3	54.8	0.0	29.5	38.8		56.7	62.1		58.5	61.4	28.9
Progression Factor	0.54	0.47	1.00	0.56	0.60		1.22	1.23		1.00	1.00	1.00
Incremental Delay, d2	3.5	0.4	0.0	0.2	0.9		0.5	10.3		0.6	2.4	0.1
Delay (s)	32.6	26.0	0.0	16.8	24.1		69.5	86.7		59.1	63.8	29.0
Level of Service	C	C	A	B	C		E	F		E	E	C
Approach Delay (s)		28.5			23.3			84.4			41.1	
Approach LOS		C			C			F			D	

Intersection Summary			
HCM Average Control Delay	41.6	HCM Level of Service	D
HCM Volume to Capacity ratio	0.59		
Actuated Cycle Length (s)	150.0	Sum of lost time (s)	24.0
Intersection Capacity Utilization	62.2%	ICU Level of Service	B
Analysis Period (min)	15		
c Critical Lane Group			

Intersection Sign configuration not allowed in HCM analysis.

Movement	EBL	EBT	EBR	WBL	WBT	WBR	NBL	NBT	NBR	SBL	SBT	SBR
Lane Configurations												
Volume (vph)	90	52	163	42	9	42	59	128	31	17	144	296
Ideal Flow (vphpl)	1900	1900	1900	1900	1900	1900	1900	1900	1900	1900	1900	1900
Lane Width	11	12	11	12	12	12	11	11	12	12	11	11
Total Lost time (s)		6.0	6.0	6.0	6.0		6.0	6.0		6.0	6.0	
Lane Util. Factor		1.00	0.88	1.00	1.00		0.97	0.95		1.00	0.95	
Frt		1.00	0.85	1.00	0.88		1.00	0.97		1.00	0.90	
Flt Protected		0.97	1.00	0.95	1.00		0.95	1.00		0.95	1.00	
Satd. Flow (prot)		1806	2694	1770	1632		3319	3320		1770	3076	
Flt Permitted		0.78	1.00	0.95	1.00		0.95	1.00		0.95	1.00	
Satd. Flow (perm)		1448	2694	1770	1632		3319	3320		1770	3076	
Peak-hour factor, PHF	0.92	0.90	0.92	0.90	0.90	0.90	0.92	0.92	0.90	0.90	0.92	0.92
Adj. Flow (vph)	98	58	177	47	10	47	64	139	34	19	157	322
RTOR Reduction (vph)	0	0	61	0	25	0	0	15	0	0	292	0
Lane Group Flow (vph)	0	156	116	47	32	0	64	158	0	19	187	0
Turn Type	Perm		pt+ov	Prot			Prot			Prot		
Protected Phases		6	6 7	5	2		7	4		3	8	
Permitted Phases	6											
Actuated Green, G (s)		52.0	98.7	13.2	71.2		46.7	59.0		1.8	14.1	
Effective Green, g (s)		52.0	98.7	13.2	71.2		46.7	59.0		1.8	14.1	
Actuated g/C Ratio		0.35	0.66	0.09	0.47		0.31	0.39		0.01	0.09	
Clearance Time (s)		6.0		6.0	6.0		6.0	6.0		6.0	6.0	
Vehicle Extension (s)		3.0		3.0	3.0		3.0	3.0		3.0	3.0	
Lane Grp Cap (vph)		502	1773	156	775		1033	1306		21	289	
v/s Ratio Prot			0.04	c0.03	0.02		0.02	c0.05		c0.01	c0.06	
v/s Ratio Perm		c0.11										
v/c Ratio		0.31	0.07	0.30	0.04		0.06	0.12		0.90	0.65	
Uniform Delay, d1		35.9	9.2	64.1	21.1		36.3	29.0		74.0	65.6	
Progression Factor		1.62	1.11	1.00	1.00		1.27	1.24		0.99	0.60	
Incremental Delay, d2		0.4	0.0	4.9	0.1		0.0	0.2		127.3	3.7	
Delay (s)		58.6	10.2	69.0	21.2		46.1	36.1		200.3	43.0	
Level of Service		E	B	E	C		D	D		F	D	
Approach Delay (s)		32.8			42.8			38.8			49.0	
Approach LOS		C			D			D			D	

Intersection Summary			
HCM Average Control Delay	41.8	HCM Level of Service	D
HCM Volume to Capacity ratio	0.28		
Actuated Cycle Length (s)	150.0	Sum of lost time (s)	24.0
Intersection Capacity Utilization	46.2%	ICU Level of Service	A
Analysis Period (min)	15		

c Critical Lane Group

Movement	EBL	EBT	EBR	WBL	WBT	WBR	NBL	NBT	NBR	SBL	SBT	SBR
Lane Configurations												
Volume (vph)	114	560	258	35	480	48	198	302	12	35	339	24
Ideal Flow (vphpl)	1900	1900	1900	1900	1900	1900	1900	1900	1900	1900	1900	1900
Total Lost time (s)	6.0	6.0	6.0	6.0	6.0		6.0	6.0		6.0	6.0	6.0
Lane Util. Factor	1.00	0.95	1.00	1.00	0.95		0.97	0.95		1.00	1.00	1.00
Frt	1.00	1.00	0.85	1.00	0.99		1.00	0.99		1.00	1.00	0.85
Flt Protected	0.95	1.00	1.00	0.95	1.00		0.95	1.00		0.95	1.00	1.00
Satd. Flow (prot)	1770	3539	1583	1770	3491		3433	3519		1770	1863	1583
Flt Permitted	0.32	1.00	1.00	0.42	1.00		0.95	1.00		0.95	1.00	1.00
Satd. Flow (perm)	592	3539	1583	785	3491		3433	3519		1770	1863	1583
Peak-hour factor, PHF	0.92	0.92	0.92	0.92	0.92	0.92	0.92	0.92	0.92	0.92	0.92	0.92
Adj. Flow (vph)	124	609	280	38	522	52	215	328	13	38	368	26
RTOR Reduction (vph)	0	0	146	0	4	0	0	2	0	0	0	20
Lane Group Flow (vph)	124	609	134	38	570	0	215	339	0	38	368	6
Turn Type	pm+pt		Perm	pm+pt			Prot			Prot		Perm
Protected Phases	1	6		5	2		7	4		3	8	
Permitted Phases	6		6	2								8
Actuated Green, G (s)	71.6	71.6	71.6	68.6	68.6		10.0	40.8		5.6	36.4	36.4
Effective Green, g (s)	71.6	71.6	71.6	68.6	68.6		10.0	40.8		5.6	36.4	36.4
Actuated g/C Ratio	0.48	0.48	0.48	0.46	0.46		0.07	0.27		0.04	0.24	0.24
Clearance Time (s)	6.0	6.0	6.0	6.0	6.0		6.0	6.0		6.0	6.0	6.0
Vehicle Extension (s)	3.0	3.0	3.0	3.0	3.0		3.0	3.0		3.0	3.0	3.0
Lane Grp Cap (vph)	369	1689	756	412	1597		229	957		66	452	384
v/s Ratio Prot	0.02	c0.17		0.00	c0.16		c0.06	c0.10		0.02	c0.20	
v/s Ratio Perm	0.14		0.08	0.04								0.00
v/c Ratio	0.34	0.36	0.18	0.09	0.36		0.94	0.35		0.58	0.81	0.02
Uniform Delay, d1	23.1	24.7	22.4	23.2	26.4		69.7	44.0		71.0	53.6	43.2
Progression Factor	0.87	0.82	0.54	1.31	1.41		1.00	1.00		1.58	0.39	0.05
Incremental Delay, d2	0.5	0.6	0.5	0.1	0.6		42.3	0.2		11.2	10.4	0.0
Delay (s)	20.6	21.0	12.6	30.4	37.9		112.0	44.2		123.8	31.2	2.2
Level of Service	C	C	B	C	D		F	D		F	C	A
Approach Delay (s)		18.6			37.4			70.4			37.6	
Approach LOS		B			D			E			D	

Intersection Summary			
HCM Average Control Delay	37.2	HCM Level of Service	D
HCM Volume to Capacity ratio	0.57		
Actuated Cycle Length (s)	150.0	Sum of lost time (s)	30.0
Intersection Capacity Utilization	64.6%	ICU Level of Service	C
Analysis Period (min)	15		
c Critical Lane Group			

Movement	EBL	EBT	EBR	WBL	WBT	WBR	NBL	NBT	NBR	SBL	SBT	SBR
Lane Configurations												
Volume (vph)	41	505	74	118	384	212	57	19	37	213	61	27
Ideal Flow (vphpl)	1900	1900	1900	1900	1900	1900	1900	1900	1900	1900	1900	1900
Lane Width	11	11	11	11	11	11	11	11	11	11	11	11
Total Lost time (s)	6.0	6.0		6.0	6.0	6.0	6.0	6.0		6.0	6.0	
Lane Util. Factor	1.00	0.95		1.00	0.95	0.88	1.00	1.00		0.97	1.00	
Frt	1.00	0.98		1.00	1.00	0.85	1.00	0.90		1.00	0.95	
Flt Protected	0.95	1.00		0.95	1.00	1.00	0.95	1.00		0.95	1.00	
Satd. Flow (prot)	1711	3356		1711	3421	2694	1711	1624		3319	1718	
Flt Permitted	0.46	1.00		0.41	1.00	1.00	0.95	1.00		0.95	1.00	
Satd. Flow (perm)	836	3356		744	3421	2694	1711	1624		3319	1718	
Peak-hour factor, PHF	0.92	0.92	0.92	0.92	0.92	0.92	0.92	0.92	0.92	0.92	0.92	0.92
Adj. Flow (vph)	45	549	80	128	417	230	62	21	40	232	66	29
RTOR Reduction (vph)	0	6	0	0	0	0	0	38	0	0	13	0
Lane Group Flow (vph)	45	623	0	128	417	230	62	23	0	232	82	0
Turn Type	pm+pt			pm+pt		pt+ov	Prot			Prot		
Protected Phases	1	6		5	2	2 3	7	4		3	8	
Permitted Phases	6			2								
Actuated Green, G (s)	91.1	91.1		97.2	97.2	113.1	7.8	6.8		15.9	14.9	
Effective Green, g (s)	91.1	91.1		97.2	97.2	113.1	7.8	6.8		15.9	14.9	
Actuated g/C Ratio	0.61	0.61		0.65	0.65	0.75	0.05	0.05		0.11	0.10	
Clearance Time (s)	6.0	6.0		6.0	6.0		6.0	6.0		6.0	6.0	
Vehicle Extension (s)	3.0	3.0		3.0	3.0		3.0	3.0		3.0	3.0	
Lane Grp Cap (vph)	543	2038		561	2217	2031	89	74		352	171	
v/s Ratio Prot	0.00	c0.19		c0.02	0.12	0.09	c0.04	0.01		c0.07	0.05	
v/s Ratio Perm	0.05			0.13								
v/c Ratio	0.08	0.31		0.23	0.19	0.11	0.70	0.31		0.66	0.48	
Uniform Delay, d1	12.1	14.2		11.2	10.6	5.0	69.9	69.3		64.4	63.9	
Progression Factor	0.39	0.45		0.13	0.14	0.21	1.00	1.00		0.66	0.57	
Incremental Delay, d2	0.1	0.4		0.2	0.2	0.0	21.1	2.4		4.3	2.1	
Delay (s)	4.7	6.7		1.7	1.6	1.1	91.0	71.7		46.8	38.6	
Level of Service	A	A		A	A	A	F	E		D	D	
Approach Delay (s)		6.6			1.5			81.4			44.4	
Approach LOS		A			A			F			D	

Intersection Summary			
HCM Average Control Delay	15.9	HCM Level of Service	B
HCM Volume to Capacity ratio	0.34		
Actuated Cycle Length (s)	150.0	Sum of lost time (s)	12.0
Intersection Capacity Utilization	50.6%	ICU Level of Service	A
Analysis Period (min)	15		

c Critical Lane Group

Movement	EBL	EBT	EBR	WBL	WBT	WBR	NBL	NBT	NBR	SBL	SBT	SBR
Lane Configurations												
Volume (vph)	170	736	19	15	806	257	17	7	12	360	3	89
Ideal Flow (vphpl)	1900	1900	1900	1900	1900	1900	1900	1900	1900	1900	1900	1900
Total Lost time (s)	6.0	6.0		6.0	6.0	6.0	6.0	6.0		6.0	6.0	
Lane Util. Factor	1.00	0.95		1.00	0.95	1.00	1.00	1.00		0.95	0.95	
Frt	1.00	1.00		1.00	1.00	0.85	1.00	0.90		1.00	0.94	
Flt Protected	0.95	1.00		0.95	1.00	1.00	0.95	1.00		0.95	0.97	
Satd. Flow (prot)	1770	3526		1770	3539	1583	1770	1681		1681	1615	
Flt Permitted	0.27	1.00		0.31	1.00	1.00	0.95	1.00		0.95	0.97	
Satd. Flow (perm)	512	3526		578	3539	1583	1770	1681		1681	1615	
Peak-hour factor, PHF	0.95	0.95	0.95	0.95	0.95	0.95	0.95	0.95	0.95	0.95	0.95	0.95
Adj. Flow (vph)	179	775	20	16	848	271	18	7	13	379	3	94
RTOR Reduction (vph)	0	1	0	0	0	119	0	12	0	0	16	0
Lane Group Flow (vph)	179	794	0	16	848	152	18	8	0	243	217	0
Turn Type	pm+pt			Perm		Perm	Split			Split		
Protected Phases	7	4			8		2	2		6	6	
Permitted Phases	4			8		8						
Actuated Green, G (s)	98.0	98.0		84.0	84.0	84.0	16.0	16.0		18.0	18.0	
Effective Green, g (s)	98.0	98.0		84.0	84.0	84.0	16.0	16.0		18.0	18.0	
Actuated g/C Ratio	0.65	0.65		0.56	0.56	0.56	0.11	0.11		0.12	0.12	
Clearance Time (s)	6.0	6.0		6.0	6.0	6.0	6.0	6.0		6.0	6.0	
Vehicle Extension (s)	3.0	3.0		3.0	3.0	3.0	3.0	3.0		3.0	3.0	
Lane Grp Cap (vph)	402	2304		324	1982	886	189	179		202	194	
v/s Ratio Prot	c0.02	0.23			0.24		c0.01	0.00		c0.14	0.13	
v/s Ratio Perm	c0.27			0.03		0.10						
v/c Ratio	0.45	0.34		0.05	0.43	0.17	0.10	0.05		1.20	1.12	
Uniform Delay, d1	21.5	11.6		14.9	19.1	16.1	60.5	60.2		66.0	66.0	
Progression Factor	0.52	0.45		0.92	1.25	3.67	1.00	1.00		1.00	1.00	
Incremental Delay, d2	0.8	0.4		0.3	0.6	0.4	1.0	0.5		128.8	100.3	
Delay (s)	12.0	5.7		14.1	24.4	59.3	61.5	60.6		194.8	166.3	
Level of Service	B	A		B	C	E	E	E		F	F	
Approach Delay (s)		6.9			32.6			61.0			180.9	
Approach LOS		A			C			E			F	

Intersection Summary			
HCM Average Control Delay	50.4	HCM Level of Service	D
HCM Volume to Capacity ratio	0.50		
Actuated Cycle Length (s)	150.0	Sum of lost time (s)	18.0
Intersection Capacity Utilization	66.1%	ICU Level of Service	C
Analysis Period (min)	15		
c Critical Lane Group			

Movement	EBT	EBR	WBL	WBT	NBL	NBR
Lane Configurations						
Volume (vph)	864	232	197	867	217	206
Ideal Flow (vphpl)	1900	1900	1900	1900	1900	1900
Total Lost time (s)	6.0		6.0	6.0	6.0	6.0
Lane Util. Factor	0.95		1.00	0.95	0.97	1.00
Frt	0.97		1.00	1.00	1.00	0.85
Flt Protected	1.00		0.95	1.00	0.95	1.00
Satd. Flow (prot)	3427		1770	3539	3433	1583
Flt Permitted	1.00		0.20	1.00	0.95	1.00
Satd. Flow (perm)	3427		368	3539	3433	1583
Peak-hour factor, PHF	0.95	0.95	0.95	0.95	0.95	0.95
Adj. Flow (vph)	909	244	207	913	228	217
RTOR Reduction (vph)	8	0	0	0	0	202
Lane Group Flow (vph)	1145	0	207	913	228	15
Turn Type			pm+pt			Over
Protected Phases	4		3	8		3
Permitted Phases			8		2	
Actuated Green, G (s)	106.6		122.8	122.8	15.2	10.2
Effective Green, g (s)	106.6		122.8	122.8	15.2	10.2
Actuated g/C Ratio	0.71		0.82	0.82	0.10	0.07
Clearance Time (s)	6.0		6.0	6.0	6.0	6.0
Vehicle Extension (s)	3.0		3.0	3.0	3.0	3.0
Lane Grp Cap (vph)	2435		397	2897	348	108
v/s Ratio Prot	0.33		c0.04	0.26		0.01
v/s Ratio Perm			c0.39		c0.07	
v/c Ratio	0.47		0.52	0.32	0.66	0.14
Uniform Delay, d1	9.4		5.8	3.3	64.9	65.8
Progression Factor	0.22		0.94	1.30	0.84	1.42
Incremental Delay, d2	0.5		1.0	0.2	4.4	0.6
Delay (s)	2.6		6.5	4.6	59.1	94.3
Level of Service	A		A	A	E	F
Approach Delay (s)	2.6			4.9	76.3	
Approach LOS	A			A	E	

Intersection Summary			
HCM Average Control Delay	15.6	HCM Level of Service	B
HCM Volume to Capacity ratio	0.53		
Actuated Cycle Length (s)	150.0	Sum of lost time (s)	12.0
Intersection Capacity Utilization	63.4%	ICU Level of Service	B
Analysis Period (min)	15		
c Critical Lane Group			

Movement	EBL	EBT	EBR	WBL	WBT	WBR	NBL	NBT	NBR	SBL	SBT	SBR
Lane Configurations												
Volume (vph)	129	739	201	0	726	162	186	202	0	152	228	113
Ideal Flow (vphpl)	1900	1900	1900	1900	1900	1900	1900	1900	1900	1900	1900	1900
Total Lost time (s)	6.0	6.0	6.0		6.0	6.0		6.0		6.0	6.0	
Lane Util. Factor	1.00	0.95	1.00		0.95	1.00		0.95		0.91	0.91	
Frt	1.00	1.00	0.85		1.00	0.85		1.00		1.00	0.95	
Flt Protected	0.95	1.00	1.00		1.00	1.00		0.98		0.95	1.00	
Satd. Flow (prot)	1770	3539	1583		3539	1583		3456		1610	3222	
Flt Permitted	0.27	1.00	1.00		1.00	1.00		0.98		0.95	1.00	
Satd. Flow (perm)	504	3539	1583		3539	1583		3456		1610	3222	
Peak-hour factor, PHF	0.95	0.95	0.95	0.95	0.95	0.95	0.95	0.95	0.95	0.95	0.95	0.95
Adj. Flow (vph)	136	778	212	0	764	171	196	213	0	160	240	119
RTOR Reduction (vph)	0	0	89	0	0	96	0	0	0	0	33	0
Lane Group Flow (vph)	136	778	123	0	764	75	0	409	0	144	343	0
Turn Type	pm+pt		Perm			Perm	Split			Split		
Protected Phases	7	4			8		2	2		6	6	
Permitted Phases	4		4			8						
Actuated Green, G (s)	87.0	87.0	87.0		66.0	66.0		20.0		25.0	25.0	
Effective Green, g (s)	87.0	87.0	87.0		66.0	66.0		20.0		25.0	25.0	
Actuated g/C Ratio	0.58	0.58	0.58		0.44	0.44		0.13		0.17	0.17	
Clearance Time (s)	6.0	6.0	6.0		6.0	6.0		6.0		6.0	6.0	
Vehicle Extension (s)	3.0	3.0	3.0		3.0	3.0		3.0		3.0	3.0	
Lane Grp Cap (vph)	419	2053	918		1557	697		461		268	537	
v/s Ratio Prot	0.03	c0.22			c0.22			c0.12		0.09	c0.11	
v/s Ratio Perm	0.16		0.08			0.05						
v/c Ratio	0.32	0.38	0.13		0.49	0.11		0.89		0.54	0.64	
Uniform Delay, d1	27.5	17.0	14.3		30.0	24.7		63.9		57.2	58.3	
Progression Factor	1.47	1.51	4.78		0.87	0.48		1.55		1.00	1.00	
Incremental Delay, d2	0.4	0.5	0.3		1.1	0.3		21.0		7.5	5.7	
Delay (s)	41.0	26.0	68.8		27.2	12.2		119.8		64.7	64.0	
Level of Service	D	C	E		C	B		F		E	E	
Approach Delay (s)		35.9			24.5			119.8			64.2	
Approach LOS		D			C			F			E	

Intersection Summary			
HCM Average Control Delay	48.7	HCM Level of Service	D
HCM Volume to Capacity ratio	0.55		
Actuated Cycle Length (s)	150.0	Sum of lost time (s)	18.0
Intersection Capacity Utilization	67.8%	ICU Level of Service	C
Analysis Period (min)	15		
c Critical Lane Group			

Movement	EBL	EBT	EBR	WBL	WBT	WBR	NBL	NBT	NBR	SBL	SBT	SBR
Lane Configurations												
Volume (vph)	12	1097	166	72	1160	12	116	0	72	1	1	19
Ideal Flow (vphpl)	1900	1900	1900	1900	1900	1900	1900	1900	1900	1900	1900	1900
Total Lost time (s)	6.0	6.0		6.0	6.0		6.0	6.0			6.0	
Lane Util. Factor	1.00	0.95		1.00	0.95		1.00	1.00			1.00	
Frt	1.00	0.98		1.00	1.00		1.00	0.85			0.88	
Flt Protected	0.95	1.00		0.95	1.00		0.95	1.00			1.00	
Satd. Flow (prot)	1770	3469		1770	3534		1770	1583			1630	
Flt Permitted	0.22	1.00		0.16	1.00		0.74	1.00			0.99	
Satd. Flow (perm)	419	3469		299	3534		1384	1583			1618	
Peak-hour factor, PHF	0.95	0.95	0.95	0.95	0.95	0.95	0.95	0.95	0.95	0.95	0.95	0.95
Adj. Flow (vph)	13	1155	175	76	1221	13	122	0	76	1	1	20
RTOR Reduction (vph)	0	8	0	0	0	0	0	67	0	0	18	0
Lane Group Flow (vph)	13	1322	0	76	1234	0	122	9	0	0	4	0
Turn Type	Perm			pm+pt			Perm			Perm		
Protected Phases		4		3	8			2			6	
Permitted Phases	4			8			2			6		
Actuated Green, G (s)	110.0	110.0		120.0	120.0		18.0	18.0			18.0	
Effective Green, g (s)	110.0	110.0		120.0	120.0		18.0	18.0			18.0	
Actuated g/C Ratio	0.73	0.73		0.80	0.80		0.12	0.12			0.12	
Clearance Time (s)	6.0	6.0		6.0	6.0		6.0	6.0			6.0	
Vehicle Extension (s)	3.0	3.0		3.0	3.0		3.0	3.0			3.0	
Lane Grp Cap (vph)	307	2544		278	2827		166	190			194	
v/s Ratio Prot		c0.38		0.01	c0.35			0.01				
v/s Ratio Perm	0.03			0.21			c0.09				0.00	
v/c Ratio	0.04	0.52		0.27	0.44		0.73	0.05			0.02	
Uniform Delay, d1	5.5	8.6		5.8	4.6		63.7	58.4			58.2	
Progression Factor	1.90	2.15		1.00	1.00		1.00	1.00			1.00	
Incremental Delay, d2	0.2	0.7		0.5	0.5		24.9	0.5			0.2	
Delay (s)	10.7	19.2		6.4	5.1		88.6	58.9			58.5	
Level of Service	B	B		A	A		F	E			E	
Approach Delay (s)		19.1			5.2			77.2			58.5	
Approach LOS		B			A			E			E	

Intersection Summary			
HCM Average Control Delay	17.1	HCM Level of Service	B
HCM Volume to Capacity ratio	0.56		
Actuated Cycle Length (s)	150.0	Sum of lost time (s)	18.0
Intersection Capacity Utilization	67.7%	ICU Level of Service	C
Analysis Period (min)	15		
c Critical Lane Group			

Movement	EBL	EBT	EBR	WBL	WBT	WBR	NBL	NBT	NBR	SBL	SBT	SBR
Lane Configurations												
Volume (vph)	100	210	303	0	149	52	224	715	11	27	775	137
Ideal Flow (vphpl)	1900	1900	1900	1900	1900	1900	1900	1900	1900	1900	1900	1900
Total Lost time (s)	6.0	6.0			6.0		6.0	6.0		6.0	6.0	
Lane Util. Factor	1.00	0.95			0.91		1.00	0.91		1.00	0.91	
Frt	1.00	0.91			0.96		1.00	1.00		1.00	0.98	
Flt Protected	0.95	1.00			1.00		0.95	1.00		0.95	1.00	
Satd. Flow (prot)	1770	3226			4887		1770	5073		1770	4971	
Flt Permitted	0.40	1.00			1.00		0.22	1.00		0.95	1.00	
Satd. Flow (perm)	745	3226			4887		415	5073		1770	4971	
Peak-hour factor, PHF	0.95	0.95	0.95	0.95	0.95	0.95	0.95	0.95	0.95	0.95	0.95	0.95
Adj. Flow (vph)	105	221	319	0	157	55	236	753	12	28	816	144
RTOR Reduction (vph)	0	185	0	0	44	0	0	1	0	0	15	0
Lane Group Flow (vph)	105	355	0	0	168	0	236	764	0	28	945	0
Turn Type	pm+pt						pm+pt			Prot		
Protected Phases	7	4			8		5	2		1	6	
Permitted Phases	4						2					
Actuated Green, G (s)	31.1	31.1			11.9		96.2	96.2		4.7	44.7	
Effective Green, g (s)	31.1	31.1			11.9		96.2	96.2		4.7	44.7	
Actuated g/C Ratio	0.21	0.21			0.08		0.64	0.64		0.03	0.30	
Clearance Time (s)	6.0	6.0			6.0		6.0	6.0		6.0	6.0	
Vehicle Extension (s)	3.0	3.0			3.0		3.0	3.0		3.0	3.0	
Lane Grp Cap (vph)	245	669			388		774	3253		55	1481	
v/s Ratio Prot	0.04	c0.11			0.03		c0.11	0.15		0.02	c0.19	
v/s Ratio Perm	0.05						0.08					
v/c Ratio	0.43	0.53			0.43		0.30	0.23		0.51	0.64	
Uniform Delay, d1	50.2	53.0			65.8		20.0	11.4		71.5	45.6	
Progression Factor	1.00	1.00			1.35		0.32	0.30		0.71	0.80	
Incremental Delay, d2	1.2	0.8			0.8		0.2	0.2		7.1	2.1	
Delay (s)	51.4	53.8			89.6		6.5	3.6		57.7	38.5	
Level of Service	D	D			F		A	A		E	D	
Approach Delay (s)		53.4			89.6			4.3			39.1	
Approach LOS		D			F			A			D	

Intersection Summary			
HCM Average Control Delay	33.8	HCM Level of Service	C
HCM Volume to Capacity ratio	0.45		
Actuated Cycle Length (s)	150.0	Sum of lost time (s)	12.0
Intersection Capacity Utilization	61.0%	ICU Level of Service	B
Analysis Period (min)	15		
c Critical Lane Group			

Movement	EBL	EBT	EBR	WBL	WBT	WBR	NBL	NBT	NBR	SBL	SBT	SBR
Lane Configurations												
Volume (vph)	160	743	13	3	765	59	1	4	7	99	1	166
Ideal Flow (vphpl)	1900	1900	1900	1900	1900	1900	1900	1900	1900	1900	1900	1900
Total Lost time (s)	6.0	6.0		6.0	6.0			6.0			6.0	6.0
Lane Util. Factor	1.00	0.91		1.00	0.91			1.00			1.00	1.00
Frt	1.00	1.00		1.00	0.99			0.92			1.00	0.85
Flt Protected	0.95	1.00		0.95	1.00			1.00			0.95	1.00
Satd. Flow (prot)	1770	5072		1770	5031			1709			1775	1583
Flt Permitted	0.27	1.00		0.30	1.00			0.99			0.73	1.00
Satd. Flow (perm)	498	5072		550	5031			1701			1354	1583
Peak-hour factor, PHF	0.95	0.95	0.95	0.95	0.95	0.95	0.95	0.95	0.95	0.95	0.95	0.95
Adj. Flow (vph)	168	782	14	3	805	62	1	4	7	104	1	175
RTOR Reduction (vph)	0	2	0	0	11	0	0	4	0	0	0	97
Lane Group Flow (vph)	168	794	0	3	856	0	0	8	0	0	105	78
Turn Type	Perm			Perm			Perm			Perm		Perm
Protected Phases		4			8			2			6	
Permitted Phases	4			8			2			6		6
Actuated Green, G (s)	71.4	71.4		71.4	71.4			66.6			66.6	66.6
Effective Green, g (s)	71.4	71.4		71.4	71.4			66.6			66.6	66.6
Actuated g/C Ratio	0.48	0.48		0.48	0.48			0.44			0.44	0.44
Clearance Time (s)	6.0	6.0		6.0	6.0			6.0			6.0	6.0
Vehicle Extension (s)	3.0	3.0		3.0	3.0			3.0			3.0	3.0
Lane Grp Cap (vph)	237	2414		262	2395			755			601	703
v/s Ratio Prot		0.16			0.17							
v/s Ratio Perm	c0.34			0.01				0.00			c0.08	0.05
v/c Ratio	0.71	0.33		0.01	0.36			0.01			0.17	0.11
Uniform Delay, d1	31.1	24.4		20.7	24.8			23.3			25.1	24.4
Progression Factor	1.15	1.20		1.40	1.38			1.00			1.00	1.00
Incremental Delay, d2	9.2	0.1		0.0	0.1			0.0			0.6	0.3
Delay (s)	45.1	29.5		29.1	34.4			23.3			25.8	24.7
Level of Service	D	C		C	C			C			C	C
Approach Delay (s)		32.2			34.4			23.3			25.1	
Approach LOS		C			C			C			C	

Intersection Summary			
HCM Average Control Delay	32.1	HCM Level of Service	C
HCM Volume to Capacity ratio	0.45		
Actuated Cycle Length (s)	150.0	Sum of lost time (s)	12.0
Intersection Capacity Utilization	52.2%	ICU Level of Service	A
Analysis Period (min)	15		
c Critical Lane Group			

Movement	EBU	EBL	EBR	NBL	NBT	SBT	SBR
Lane Configurations							
Volume (veh/h)	20	146	74	88	230	248	168
Sign Control		Stop			Free	Free	
Grade		0%			0%	0%	
Peak Hour Factor	0.95	0.95	0.95	0.95	0.95	0.95	0.95
Hourly flow rate (vph)	0	154	78	93	242	261	177
Pedestrians							
Lane Width (ft)							
Walking Speed (ft/s)							
Percent Blockage							
Right turn flare (veh)							
Median type					None	None	
Median storage veh)							
Upstream signal (ft)						1284	
pX, platoon unblocked	0.00						
vC, conflicting volume	0	777	349	438			
vC1, stage 1 conf vol							
vC2, stage 2 conf vol							
vCu, unblocked vol	0	777	349	438			
tC, single (s)	0.0	6.4	6.2	4.1			
tC, 2 stage (s)							
tF (s)	0.0	3.5	3.3	2.2			
p0 queue free %	0	54	89	92			
cM capacity (veh/h)	0	335	694	1122			

Direction, Lane #	EB 1	EB 2	NB 1	SB 1
Volume Total	154	78	335	438
Volume Left	154	0	93	0
Volume Right	0	78	0	177
cSH	335	694	1122	1700
Volume to Capacity	0.46	0.11	0.08	0.26
Queue Length 95th (ft)	58	9	7	0
Control Delay (s)	24.5	10.8	2.9	0.0
Lane LOS	C	B	A	
Approach Delay (s)	19.9		2.9	0.0
Approach LOS	C			

Intersection Summary			
Average Delay	5.6		
Intersection Capacity Utilization	59.5%	ICU Level of Service	B
Analysis Period (min)	15		

Movement	EBL	EBT	EBR	WBL	WBT	WBR	NBL	NBT	NBR	SBL	SBT	SBR
Lane Configurations												
Volume (vph)	71	68	132	387	68	29	92	953	392	17	991	56
Ideal Flow (vphpl)	1900	1900	1900	1900	1900	1900	1900	1900	1900	1900	1900	1900
Total Lost time (s)		6.0		6.0	6.0		6.0	6.0	6.0	6.0	6.0	
Lane Util. Factor		0.95		0.97	1.00		1.00	0.95	1.00	1.00	0.91	
Frt		0.93		1.00	0.95		1.00	1.00	0.85	1.00	0.99	
Flt Protected		0.99		0.95	1.00		0.95	1.00	1.00	0.95	1.00	
Satd. Flow (prot)		3239		3433	1779		1770	3539	1583	1770	5044	
Flt Permitted		0.99		0.95	1.00		0.23	1.00	1.00	0.18	1.00	
Satd. Flow (perm)		3239		3433	1779		431	3539	1583	342	5044	
Peak-hour factor, PHF	0.95	0.95	0.95	0.95	0.95	0.95	0.95	0.95	0.95	0.95	0.95	0.95
Adj. Flow (vph)	75	72	139	407	72	31	97	1003	413	18	1043	59
RTOR Reduction (vph)	0	124	0	0	12	0	0	0	149	0	3	0
Lane Group Flow (vph)	0	162	0	407	91	0	97	1003	264	18	1099	0
Turn Type	Split			Split			pm+pt		Perm	pm+pt		
Protected Phases	4	4		8	8		5	2		1	6	
Permitted Phases							2		2	6		
Actuated Green, G (s)		12.8		23.3	23.3		85.8	85.8	85.8	78.5	78.5	
Effective Green, g (s)		12.8		23.3	23.3		85.8	85.8	85.8	78.5	78.5	
Actuated g/C Ratio		0.09		0.16	0.16		0.57	0.57	0.57	0.52	0.52	
Clearance Time (s)		6.0		6.0	6.0		6.0	6.0	6.0	6.0	6.0	
Vehicle Extension (s)		3.0		3.0	3.0		3.0	3.0	3.0	3.0	3.0	
Lane Grp Cap (vph)		276		533	276		348	2024	905	218	2640	
v/s Ratio Prot		c0.05		c0.12	0.05		0.02	c0.28		0.00	c0.22	
v/s Ratio Perm							0.14		0.17	0.04		
v/c Ratio		0.59		0.76	0.33		0.28	0.50	0.29	0.08	0.42	
Uniform Delay, d1		66.0		60.7	56.4		20.0	19.2	16.5	19.7	21.8	
Progression Factor		1.00		1.12	1.10		1.00	1.00	1.00	0.19	0.18	
Incremental Delay, d2		3.2		6.2	0.7		0.4	0.9	0.8	0.1	0.4	
Delay (s)		69.2		74.0	62.6		20.4	20.0	17.3	3.9	4.2	
Level of Service		E		E	E		C	C	B	A	A	
Approach Delay (s)		69.2			71.7			19.3			4.2	
Approach LOS		E			E			B			A	

Intersection Summary			
HCM Average Control Delay	26.3	HCM Level of Service	C
HCM Volume to Capacity ratio	0.56		
Actuated Cycle Length (s)	150.0	Sum of lost time (s)	24.0
Intersection Capacity Utilization	68.9%	ICU Level of Service	C
Analysis Period (min)	15		
c Critical Lane Group			

Movement	EBL	EBT	EBR	WBL	WBT	WBR	NBL	NBT	NBR	SBL	SBT	SBR
Lane Configurations												
Volume (vph)	84	426	11	6	503	135	22	29	9	119	75	57
Ideal Flow (vphpl)	1900	1900	1900	1900	1900	1900	1900	1900	1900	1900	1900	1900
Total Lost time (s)	6.0	6.0		6.0	6.0		6.0	6.0		6.0	6.0	6.0
Lane Util. Factor	1.00	0.95		1.00	0.95		1.00	0.95		0.95	0.95	1.00
Frt	1.00	1.00		1.00	0.97		1.00	0.97		1.00	1.00	0.85
Flt Protected	0.95	1.00		0.95	1.00		0.95	1.00		0.95	0.99	1.00
Satd. Flow (prot)	1770	3525		1770	3427		1770	3420		1681	1749	1583
Flt Permitted	0.19	1.00		0.35	1.00		0.95	1.00		0.95	0.99	1.00
Satd. Flow (perm)	354	3525		656	3427		1770	3420		1681	1749	1583
Peak-hour factor, PHF	0.95	0.95	0.95	0.95	0.95	0.95	0.95	0.95	0.95	0.95	0.95	0.95
Adj. Flow (vph)	88	448	12	6	529	142	23	31	9	125	79	60
RTOR Reduction (vph)	0	2	0	0	27	0	0	5	0	0	0	50
Lane Group Flow (vph)	88	458	0	6	644	0	23	35	0	100	104	10
Turn Type	Perm			Perm			Split			Split		Perm
Protected Phases		4			8		2	2		6	6	
Permitted Phases	4			8								6
Actuated Green, G (s)	40.0	40.0		40.0	40.0		66.0	66.0		26.0	26.0	26.0
Effective Green, g (s)	40.0	40.0		40.0	40.0		66.0	66.0		26.0	26.0	26.0
Actuated g/C Ratio	0.27	0.27		0.27	0.27		0.44	0.44		0.17	0.17	0.17
Clearance Time (s)	6.0	6.0		6.0	6.0		6.0	6.0		6.0	6.0	6.0
Vehicle Extension (s)	3.0	3.0		3.0	3.0		3.0	3.0		3.0	3.0	3.0
Lane Grp Cap (vph)	94	940		175	914		779	1505		291	303	274
v/s Ratio Prot		0.13			0.19		c0.01	0.01		c0.06	0.06	
v/s Ratio Perm	c0.25			0.01								0.01
v/c Ratio	0.94	0.49		0.03	0.70		0.03	0.02		0.34	0.34	0.04
Uniform Delay, d1	53.8	46.4		40.7	49.7		23.8	23.8		54.5	54.5	51.6
Progression Factor	0.99	0.98		0.35	0.41		1.00	1.00		1.41	1.41	2.91
Incremental Delay, d2	69.5	0.4		0.1	2.4		0.1	0.0		3.2	3.1	0.3
Delay (s)	122.9	45.6		14.3	22.8		23.9	23.8		79.9	80.0	150.2
Level of Service	F	D		B	C		C	C		E	E	F
Approach Delay (s)		58.0			22.7			23.8			95.9	
Approach LOS		E			C			C			F	

Intersection Summary			
HCM Average Control Delay	47.7	HCM Level of Service	D
HCM Volume to Capacity ratio	0.36		
Actuated Cycle Length (s)	150.0	Sum of lost time (s)	18.0
Intersection Capacity Utilization	49.8%	ICU Level of Service	A
Analysis Period (min)	15		
c Critical Lane Group			

Movement	EBL	EBT	EBR	WBL	WBT	WBR	NBL	NBT	NBR	SBL	SBT	SBR
Lane Configurations												
Volume (vph)	122	790	58	23	747	158	61	25	34	102	28	158
Ideal Flow (vphpl)	1900	1900	1900	1900	1900	1900	1900	1900	1900	1900	1900	1900
Total Lost time (s)	6.0	6.0		6.0	6.0		6.0	6.0		6.0	6.0	6.0
Lane Util. Factor	1.00	0.95		1.00	0.95		1.00	1.00		1.00	1.00	1.00
Frt	1.00	0.99		1.00	0.97		1.00	0.91		1.00	1.00	0.85
Flt Protected	0.95	1.00		0.95	1.00		0.95	1.00		0.95	1.00	1.00
Satd. Flow (prot)	1770	3503		1770	3447		1770	1701		1770	1863	1583
Flt Permitted	0.14	1.00		0.19	1.00		0.74	1.00		0.72	1.00	1.00
Satd. Flow (perm)	267	3503		345	3447		1375	1701		1335	1863	1583
Peak-hour factor, PHF	0.95	0.95	0.95	0.95	0.95	0.95	0.95	0.95	0.95	0.95	0.95	0.95
Adj. Flow (vph)	128	832	61	24	786	166	64	26	36	107	29	166
RTOR Reduction (vph)	0	8	0	0	22	0	0	20	0	0	0	90
Lane Group Flow (vph)	128	885	0	24	930	0	64	42	0	107	29	76
Turn Type	pm+pt			Perm			Perm			Perm		Perm
Protected Phases	7	4			8			2			6	
Permitted Phases	4			8			2			6		6
Actuated Green, G (s)	69.5	69.5		53.6	53.6		68.5	68.5		68.5	68.5	68.5
Effective Green, g (s)	69.5	69.5		53.6	53.6		68.5	68.5		68.5	68.5	68.5
Actuated g/C Ratio	0.46	0.46		0.36	0.36		0.46	0.46		0.46	0.46	0.46
Clearance Time (s)	6.0	6.0		6.0	6.0		6.0	6.0		6.0	6.0	6.0
Vehicle Extension (s)	3.0	3.0		3.0	3.0		3.0	3.0		3.0	3.0	3.0
Lane Grp Cap (vph)	223	1623		123	1232		628	777		610	851	723
v/s Ratio Prot	0.04	c0.25			c0.27			0.02			0.02	
v/s Ratio Perm	0.23			0.07			0.05			c0.08		0.05
v/c Ratio	0.57	0.55		0.20	0.75		0.10	0.05		0.18	0.03	0.10
Uniform Delay, d1	52.3	28.9		33.3	42.4		23.2	22.7		24.1	22.5	23.3
Progression Factor	1.03	1.03		1.62	1.50		1.00	1.00		0.83	0.85	0.59
Incremental Delay, d2	2.4	0.3		0.8	2.7		0.3	0.1		0.6	0.1	0.3
Delay (s)	56.4	30.2		54.7	66.4		23.5	22.8		20.7	19.1	13.9
Level of Service	E	C		D	E		C	C		C	B	B
Approach Delay (s)		33.5			66.1			23.2			16.8	
Approach LOS		C			E			C			B	

Intersection Summary			
HCM Average Control Delay	44.0	HCM Level of Service	D
HCM Volume to Capacity ratio	0.43		
Actuated Cycle Length (s)	150.0	Sum of lost time (s)	12.0
Intersection Capacity Utilization	59.8%	ICU Level of Service	B
Analysis Period (min)	15		
c Critical Lane Group			

Movement	EBL	EBT	EBR	WBL	WBT	WBR	NBL	NBT	NBR	SBL	SBT	SBR
Lane Configurations												
Volume (vph)	7	0	10	116	0	20	9	1410	195	29	1471	10
Ideal Flow (vphpl)	1900	1900	1900	1900	1900	1900	1900	1900	1900	1900	1900	1900
Total Lost time (s)		6.0		6.0		6.0	6.0	6.0		6.0	6.0	
Lane Util. Factor		1.00		1.00		1.00	1.00	0.91		1.00	0.91	
Frt		0.92		1.00		0.85	1.00	0.98		1.00	1.00	
Flt Protected		0.98		0.95		1.00	0.95	1.00		0.95	1.00	
Satd. Flow (prot)		1676		1770		1583	1770	4993		1770	5080	
Flt Permitted		0.98		0.75		1.00	0.13	1.00		0.12	1.00	
Satd. Flow (perm)		1676		1389		1583	243	4993		215	5080	
Peak-hour factor, PHF	0.94	0.94	0.94	0.94	0.94	0.94	0.94	0.94	0.94	0.94	0.94	0.94
Adj. Flow (vph)	7	0	11	123	0	21	10	1500	207	31	1565	11
RTOR Reduction (vph)	0	9	0	0	0	18	0	9	0	0	0	0
Lane Group Flow (vph)	0	9	0	123	0	3	10	1698	0	31	1576	0
Turn Type	Perm			custom		custom	pm+pt			Perm		
Protected Phases		4					5	2			6	
Permitted Phases	4			8		8	2			6		
Actuated Green, G (s)		15.1		15.1		15.1	82.9	82.9		75.1	75.1	
Effective Green, g (s)		15.1		15.1		15.1	82.9	82.9		75.1	75.1	
Actuated g/C Ratio		0.14		0.14		0.14	0.75	0.75		0.68	0.68	
Clearance Time (s)		6.0		6.0		6.0	6.0	6.0		6.0	6.0	
Vehicle Extension (s)		3.0		3.0		3.0	3.0	3.0		3.0	3.0	
Lane Grp Cap (vph)		230		191		217	208	3763		147	3468	
v/s Ratio Prot							0.00	c0.34			0.31	
v/s Ratio Perm		0.01		c0.09		0.00	0.04			0.14		
v/c Ratio		0.04		0.64		0.01	0.05	0.45		0.21	0.45	
Uniform Delay, d1		41.1		44.9		41.0	6.7	5.1		6.5	8.0	
Progression Factor		1.00		1.00		1.00	1.00	1.00		1.00	1.00	
Incremental Delay, d2		0.1		7.2		0.0	0.1	0.4		3.2	0.4	
Delay (s)		41.2		52.1		41.0	6.8	5.5		9.7	8.5	
Level of Service		D		D		D	A	A		A	A	
Approach Delay (s)		41.2			50.5			5.5			8.5	
Approach LOS		D			D			A			A	

Intersection Summary			
HCM Average Control Delay	8.9	HCM Level of Service	A
HCM Volume to Capacity ratio	0.48		
Actuated Cycle Length (s)	110.0	Sum of lost time (s)	12.0
Intersection Capacity Utilization	53.3%	ICU Level of Service	A
Analysis Period (min)	15		
c Critical Lane Group			

Movement	EBL	EBT	EBR	WBL	WBT	WBR	NBL	NBT	NBR	SBL	SBT	SBR
Lane Configurations												
Volume (vph)	293	207	101	456	217	60	229	1319	450	67	1342	275
Ideal Flow (vphpl)	1900	1900	1900	1900	1900	1900	1900	1900	1900	1900	1900	1900
Total Lost time (s)	6.0	6.0		6.0	6.0	6.0	6.0	6.0	6.0	6.0	6.0	
Lane Util. Factor	0.97	0.95		0.97	0.95	1.00	1.00	0.91	1.00	1.00	0.91	
Frt	1.00	0.95		1.00	1.00	0.85	1.00	1.00	0.85	1.00	0.97	
Flt Protected	0.95	1.00		0.95	1.00	1.00	0.95	1.00	1.00	0.95	1.00	
Satd. Flow (prot)	3433	3365		3433	3539	1583	1770	5085	1583	1770	4955	
Flt Permitted	0.95	1.00		0.95	1.00	1.00	0.06	1.00	1.00	0.16	1.00	
Satd. Flow (perm)	3433	3365		3433	3539	1583	105	5085	1583	304	4955	
Peak-hour factor, PHF	0.97	0.97	0.97	0.97	0.97	0.97	0.97	0.97	0.97	0.97	0.97	0.97
Adj. Flow (vph)	302	213	104	470	224	62	236	1360	464	69	1384	284
RTOR Reduction (vph)	0	0	0	0	0	26	0	0	223	0	0	0
Lane Group Flow (vph)	302	317	0	470	224	36	236	1360	241	69	1668	0
Turn Type	Prot			Prot		pm+ov	pm+pt		Perm	pm+pt		
Protected Phases	7	4		3	8	1	5	2		1	6	
Permitted Phases						8	2		2	6		
Actuated Green, G (s)	17.7	17.8		24.2	24.3	30.5	90.0	77.8	77.8	71.0	64.8	
Effective Green, g (s)	17.7	17.8		24.2	24.3	30.5	90.0	77.8	77.8	71.0	64.8	
Actuated g/C Ratio	0.12	0.12		0.16	0.16	0.20	0.60	0.52	0.52	0.47	0.43	
Clearance Time (s)	6.0	6.0		6.0	6.0	6.0	6.0	6.0	6.0	6.0	6.0	
Vehicle Extension (s)	3.0	3.0		3.0	3.0	3.0	3.0	3.0	3.0	3.0	3.0	
Lane Grp Cap (vph)	405	399		554	573	385	276	2637	821	204	2141	
v/s Ratio Prot	0.09	c0.09		c0.14	0.06	0.00	c0.11	0.27		0.01	0.34	
v/s Ratio Perm						0.02	c0.40		0.15	0.15		
v/c Ratio	0.75	0.79		0.85	0.39	0.09	0.86	0.52	0.29	0.34	0.78	
Uniform Delay, d1	64.0	64.3		61.1	56.2	48.5	46.6	23.7	20.5	22.0	36.5	
Progression Factor	1.00	1.00		1.00	1.00	1.00	1.20	0.93	2.56	1.00	1.00	
Incremental Delay, d2	7.3	10.4		11.6	0.4	0.1	20.7	0.7	0.8	1.0	2.9	
Delay (s)	71.3	74.8		72.7	56.7	48.6	76.6	22.6	53.3	22.9	39.4	
Level of Service	E	E		E	E	D	E	C	D	C	D	
Approach Delay (s)		73.1			66.0			35.7			38.7	
Approach LOS		E			E			D			D	

Intersection Summary			
HCM Average Control Delay	45.6	HCM Level of Service	D
HCM Volume to Capacity ratio	0.82		
Actuated Cycle Length (s)	150.0	Sum of lost time (s)	18.0
Intersection Capacity Utilization	86.7%	ICU Level of Service	E
Analysis Period (min)	15		
c Critical Lane Group			

Movement	EBL	EBT	EBR	WBL	WBT	WBR	NBL	NBT	NBR	SBL	SBT	SBR
Lane Configurations												
Volume (vph)	0	0	0	165	2	204	255	1793	0	0	1409	516
Ideal Flow (vphpl)	1900	1900	1900	1900	1900	1900	1900	1900	1900	1900	1900	1900
Total Lost time (s)				6.0	6.0	6.0	6.0	6.0			6.0	6.0
Lane Util. Factor				0.95	0.95	1.00	0.97	0.86			0.81	1.00
Frt				1.00	1.00	0.85	1.00	1.00			1.00	0.85
Flt Protected				0.95	0.95	1.00	0.95	1.00			1.00	1.00
Satd. Flow (prot)				1681	1687	1583	3433	6408			7544	1583
Flt Permitted				0.95	0.95	1.00	0.95	1.00			1.00	1.00
Satd. Flow (perm)				1681	1687	1583	3433	6408			7544	1583
Peak-hour factor, PHF	0.96	0.96	0.96	0.96	0.96	0.96	0.96	0.96	0.96	0.96	0.96	0.96
Adj. Flow (vph)	0	0	0	172	2	212	266	1868	0	0	1468	538
RTOR Reduction (vph)	0	0	0	0	0	29	0	0	0	0	0	204
Lane Group Flow (vph)	0	0	0	88	86	183	266	1868	0	0	1468	334
Turn Type				Perm		Perm	Prot					Perm
Protected Phases					8		5	2			6	
Permitted Phases				8		8						6
Actuated Green, G (s)				22.0	22.0	22.0	16.9	116.0			93.1	93.1
Effective Green, g (s)				22.0	22.0	22.0	16.9	116.0			93.1	93.1
Actuated g/C Ratio				0.15	0.15	0.15	0.11	0.77			0.62	0.62
Clearance Time (s)				6.0	6.0	6.0	6.0	6.0			6.0	6.0
Vehicle Extension (s)				3.0	3.0	3.0	3.0	3.0			3.0	3.0
Lane Grp Cap (vph)				247	247	232	387	4956			4682	983
v/s Ratio Prot							c0.08	c0.29			0.19	
v/s Ratio Perm				0.05	0.05	c0.12						0.21
v/c Ratio				0.36	0.35	0.79	0.69	0.38			0.31	0.34
Uniform Delay, d1				57.6	57.6	61.8	64.0	5.4			13.4	13.7
Progression Factor				1.00	1.00	1.00	1.36	0.04			0.35	0.08
Incremental Delay, d2				0.9	0.9	16.1	4.6	0.2			0.1	0.6
Delay (s)				58.5	58.4	77.9	91.8	0.4			4.8	1.7
Level of Service				E	E	E	F	A			A	A
Approach Delay (s)		0.0			69.1			11.8			3.9	
Approach LOS		A			E			B			A	

Intersection Summary			
HCM Average Control Delay	13.2	HCM Level of Service	B
HCM Volume to Capacity ratio	0.47		
Actuated Cycle Length (s)	150.0	Sum of lost time (s)	12.0
Intersection Capacity Utilization	58.8%	ICU Level of Service	B
Analysis Period (min)	15		
c Critical Lane Group			

Movement	EBL	EBT	EBR	WBL	WBT	WBR	NBL	NBT	NBR	SBL	SBT	SBR
Lane Configurations												
Volume (vph)	332	0	166	0	0	0	0	1708	228	142	1584	0
Ideal Flow (vphpl)	1900	1900	1900	1900	1900	1900	1900	1900	1900	1900	1900	1900
Total Lost time (s)	6.0		6.0					6.0		6.0	6.0	
Lane Util. Factor	0.97		0.88					0.76		0.97	0.91	
Frt	1.00		0.85					0.98		1.00	1.00	
Flt Protected	0.95		1.00					1.00		0.95	1.00	
Satd. Flow (prot)	3433		2787					8344		3433	5085	
Flt Permitted	0.95		1.00					1.00		0.95	1.00	
Satd. Flow (perm)	3433		2787					8344		3433	5085	
Peak-hour factor, PHF	0.96	0.96	0.96	0.96	0.96	0.96	0.96	0.96	0.96	0.96	0.96	0.96
Adj. Flow (vph)	346	0	173	0	0	0	0	1779	238	148	1650	0
RTOR Reduction (vph)	0	0	57	0	0	0	0	13	0	0	0	0
Lane Group Flow (vph)	346	0	116	0	0	0	0	2004	0	148	1650	0
Turn Type	custom		custom							Prot		
Protected Phases								2		1	6	
Permitted Phases	4		4									
Actuated Green, G (s)	20.7		20.7					81.3		30.0	117.3	
Effective Green, g (s)	20.7		20.7					81.3		30.0	117.3	
Actuated g/C Ratio	0.14		0.14					0.54		0.20	0.78	
Clearance Time (s)	6.0		6.0					6.0		6.0	6.0	
Vehicle Extension (s)	3.0		3.0					3.0		3.0	3.0	
Lane Grp Cap (vph)	474		385					4522		687	3976	
v/s Ratio Prot								c0.24		0.04	c0.32	
v/s Ratio Perm	c0.10		0.04									
v/c Ratio	0.73		0.30					0.44		0.22	0.41	
Uniform Delay, d1	62.0		58.1					20.7		50.2	5.3	
Progression Factor	1.00		1.00					1.00		0.88	0.14	
Incremental Delay, d2	5.6		0.4					0.3		0.2	0.3	
Delay (s)	67.5		58.6					21.0		44.4	1.0	
Level of Service	E		E					C		D	A	
Approach Delay (s)		64.6			0.0			21.0			4.6	
Approach LOS		E			A			C			A	

Intersection Summary			
HCM Average Control Delay	19.4	HCM Level of Service	B
HCM Volume to Capacity ratio	0.47		
Actuated Cycle Length (s)	150.0	Sum of lost time (s)	12.0
Intersection Capacity Utilization	58.8%	ICU Level of Service	B
Analysis Period (min)	15		
c Critical Lane Group			

Movement	EBL	EBT	EBR	WBL	WBT	WBR	NBL	NBT	NBR	SBL	SBT	SBR
Lane Configurations												
Volume (vph)	180	0	50	10	0	10	60	2042	50	10	1976	175
Ideal Flow (vphpl)	1900	1900	1900	1900	1900	1900	1900	1900	1900	1900	1900	1900
Total Lost time (s)		6.0	6.0		6.0		6.0	6.0		6.0	6.0	
Lane Util. Factor		1.00	1.00		1.00		1.00	0.86		1.00	0.86	
Frt		1.00	0.85		0.93		1.00	1.00		1.00	0.99	
Flt Protected		0.95	1.00		0.98		0.95	1.00		0.95	1.00	
Satd. Flow (prot)		1770	1583		1695		1770	6385		1770	6330	
Flt Permitted		0.74	1.00		0.84		0.05	1.00		0.05	1.00	
Satd. Flow (perm)		1384	1583		1455		94	6385		89	6330	
Peak-hour factor, PHF	0.95	0.95	0.95	0.95	0.95	0.95	0.95	0.95	0.95	0.95	0.95	0.95
Adj. Flow (vph)	189	0	53	11	0	11	63	2149	53	11	2080	184
RTOR Reduction (vph)	0	0	0	0	0	0	0	2	0	0	7	0
Lane Group Flow (vph)	0	189	53	0	22	0	63	2200	0	11	2257	0
Turn Type	Perm		Perm	Perm			pm+pt			pm+pt		
Protected Phases		4			8		5	2		1	6	
Permitted Phases	4		4	8			2			6		
Actuated Green, G (s)		25.9	25.9		25.9		103.6	103.6		96.2	96.2	
Effective Green, g (s)		25.9	25.9		25.9		103.6	103.6		96.2	96.2	
Actuated g/C Ratio		0.17	0.17		0.17		0.69	0.69		0.64	0.64	
Clearance Time (s)		6.0	6.0		6.0		6.0	6.0		6.0	6.0	
Vehicle Extension (s)		3.0	3.0		3.0		3.0	3.0		3.0	3.0	
Lane Grp Cap (vph)		239	273		251		176	4410		85	4060	
v/s Ratio Prot							0.02	c0.34		0.00	c0.36	
v/s Ratio Perm		c0.14	0.03		0.02		0.22			0.08		
v/c Ratio		0.79	0.19		0.09		0.36	0.50		0.13	0.56	
Uniform Delay, d1		59.5	53.1		52.1		29.3	11.0		12.1	15.0	
Progression Factor		1.00	1.00		1.00		1.57	2.32		0.89	0.99	
Incremental Delay, d2		16.2	0.3		0.2		0.9	0.3		0.5	0.4	
Delay (s)		75.6	53.5		52.3		47.0	25.7		11.3	15.3	
Level of Service		E	D		D		D	C		B	B	
Approach Delay (s)		70.8			52.3			26.3			15.3	
Approach LOS		E			D			C			B	

Intersection Summary			
HCM Average Control Delay	23.4	HCM Level of Service	C
HCM Volume to Capacity ratio	0.58		
Actuated Cycle Length (s)	150.0	Sum of lost time (s)	12.0
Intersection Capacity Utilization	66.5%	ICU Level of Service	C
Analysis Period (min)	15		
c Critical Lane Group			

Appendix C

AM Peak OD Matrix					
Location	MD 355 & Strathmore Between Edson & Security	Old Georgetown Rd & Tilden Ln	Montrose Parkway at Jefferson St	MD 355 & Twinbrook Pkwy	Randolph Rd East of Parklawn
MD 355 & Strathmore Between Edson & Security	0%	5%	10%	23%	4%
Old Georgetown Rd & Tilden Ln	17%	0%	21%	18%	8%
Montrose Parkway at Jefferson St	17%	24%	0%	7%	14%
MD 355 & Twinbrook Pkwy	48%	23%	6%	0%	2%
Randolph Rd East of Parklawn	11%	26%	33%	7%	0%
PM Peak OD Matrix					
MD 355 & Strathmore Between Edson & Security	0%	5%	8%	34%	7%
Old Georgetown Rd & Tilden Ln	25%	0%	25%	25%	16%
Montrose Parkway at Jefferson St	14%	19%	0%	12%	27%
MD 355 & Twinbrook Pkwy	42%	18%	3%	0%	11%
Randolph Rd East of Parklawn	12%	17%	33%	16%	0%

Appendix D

Maryland State Highway Administration
Turning Movement Summary and
Level of Service

Count Date:
Conditions: Future
Design Year: 2022

Location: MD 355 @ Twinbrook Parkway
Computed By: BJM
Date: 3/28/14

Montgomery County Method

Morning Peak Hour 7:15-8:15 am

Lane Configuration

Evening Peak Hour 5:00-6:00 pm

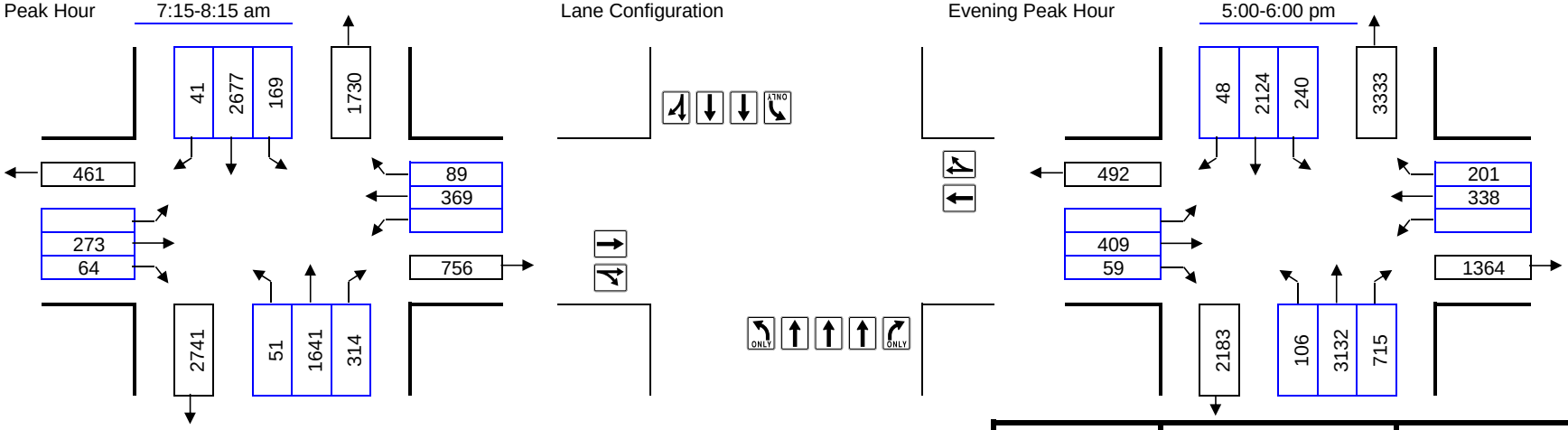

Right Turns Subtracted for Exclusive Right Turn Overlap Phasing or Right Turn on Red:

	AM	PM
NB Approach:	NB	NB
SB Approach:	SB	SB
EB Approach:	EB	EB
WB Approach:	WB	WB

Number of Lanes	Lane Use Factor		Opposing Volume (vph)		PCE
1 =	1.00	Congestion Standard	≤	199	1.1
2 =	0.53	= 1550	≤	599	2.0
3 =	0.37	for	≤	799	3.0
4 =	0.30	North Bethesda	≤	999	4.0
Dbl-left	0.60	Policy	≥	1000	5.0
		Area			

Movement	Volume	PCE	Lane Use Factor	Lane Volume	Opposing Lefts	Critical Lane Volume	*
NBT + SBL	1641	1.00	0.37	607	169	776	
SBTR + NBL	2718	1.00	0.37	1006	51	1057	*
EBTR	337	1.00	0.53	179	0	179	
WBTR	458	1.00	0.53	243	0	243	*
					Critical Volume	1300	OK
					V/C	0.84	

Movement	Volume	PCE	Lane Use Factor	Lane Volume	Opposing Lefts	Critical Lane Volume	*
NBT + SBL	3132	1.00	0.37	1159	240	1399	*
SBTR + NBL	2172	1.00	0.37	804	106	910	
EBTR	468	1.00	0.53	248	0	248	
WBTR	539	1.00	0.53	286	0	286	*
					Critical Volume	1685	F
					V/C	1.09	

Maryland State Highway Administration
Turning Movement Summary and
Level of Service

Count Date:
Conditions: Future SATURDAY
Design Year: 2022

Location: MD 355 @ Twinbrook Parkway
Computed By: LL
Date: 3/28/14

Montgomery County Method

Morning Peak Hour 7:15-8:15 am

Lane Configuration

Evening Peak Hour 5:00-6:00 pm

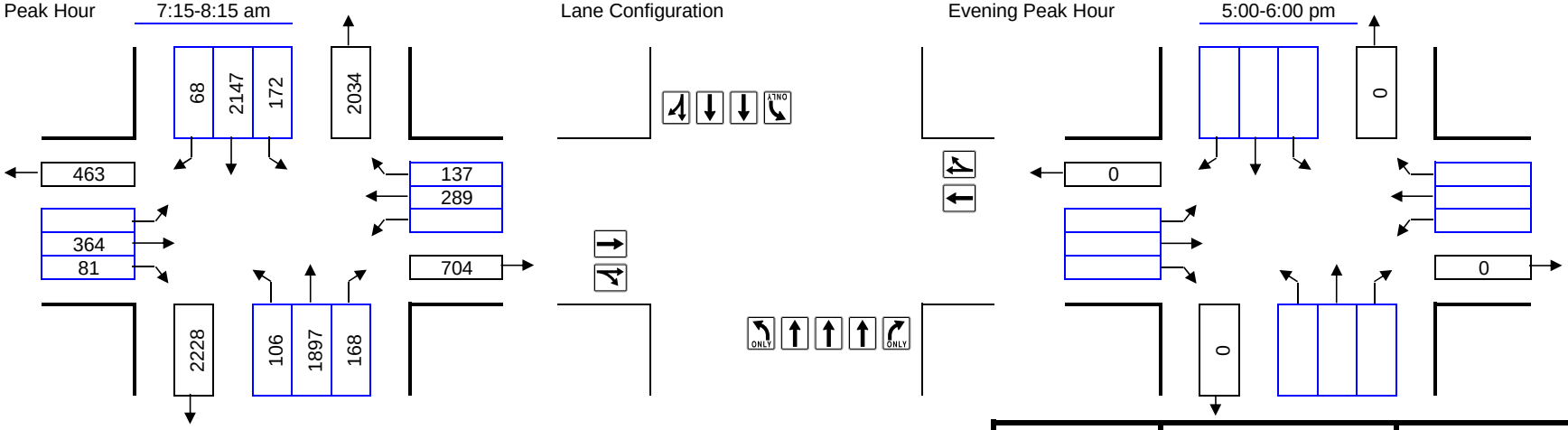

Right Turns Subtracted for Exclusive Right Turn Overlap Phasing or Right Turn on Red:

	AM	PM
NB Approach:	NB	NB
SB Approach:	SB	SB
EB Approach:	EB	EB
WB Approach:	WB	WB

Number of Lanes	Lane Use Factor		Opposing Volume (vph)		PCE
1 =	1.00	Congestion Standard	≤	199	1.1
2 =	0.53	= 1550	≤	599	2.0
3 =	0.37	for	≤	799	3.0
4 =	0.30	North Bethesda	≤	999	4.0
Dbl-left	0.60	Policy	≥	1000	5.0
		Area			

Movement	Volume	PCE	Lane Use Factor	Lane Volume	Opposing Lefts	Critical Lane Volume	*
NBT + SBL	1897	1.00	0.37	702	172	874	
SBTR + NBL	2215	1.00	0.37	820	106	926	*
EBTR	445	1.00	0.53	236	0	236	*
WBTR	426	1.00	0.53	226	0	226	
					Critical Volume	1162	OK
						V/C	0.75

Movement	Volume	PCE	Lane Use Factor	Lane Volume	Opposing Lefts	Critical Lane Volume	*
					Critical Volume	0	OK
						V/C	0.00

Maryland State Highway Administration
Turning Movement Summary and
Level of Service

Count Date:
Conditions: Future
Design Year: 2022

Location: MD 355 @ Bou Ave.
Computed By: BJM
Date: 3/27/14

Montgomery County Method

Morning Peak Hour 7:15-8:15 am

Lane Configuration

Evening Peak Hour 5:00-6:00 pm

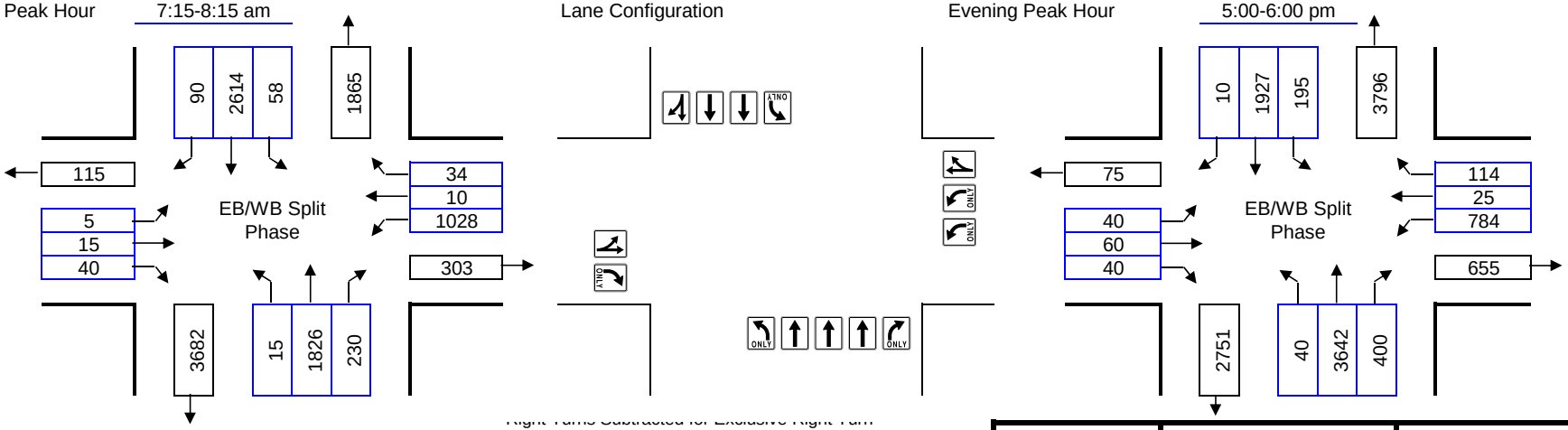

Right Turns Subtracted for Exclusive Right Turn Overlap Phasing or Right Turn on Red and Free Rights:

	AM	PM
NB Approach:	NB	NB
SB Approach:	SB	SB
EB Approach:	EB 14	EB
WB Approach:	WB	WB

Number of Lanes	Lane Use Factor		Opposing Volume (vph)		PCE
1 =	1.00	Congestion Standard	≤	199	1.1
2 =	0.53	= 1550	≤	599	2.0
3 =	0.37	for	≤	799	3.0
4 =	0.30	North Bethesda	≤	999	4.0
Dbl-left	0.60	Policy	≥	1000	5.0
		Area			

Movement	Volume	PCE	Lane Use Factor	Lane Volume	Opposing Lefts	Critical Lane Volume	*
NBT + SBL	1826	1.00	0.37	676	58	734	
SBTR + NBL	2704	1.00	0.37	1000	15	1015	*
EBR	26	1.00	1.00	26	0	26	*
WBL	1028	1.00	0.60	617	0	617	*
					Critical Volume	1658	F
					V/C	1.07	

Movement	Volume	PCE	Lane Use Factor	Lane Volume	Opposing Lefts	Critical Lane Volume	*
NBT + SBL	3642	1.00	0.37	1348	195	1543	*
SBTR + NBL	1937	1.00	0.37	717	40	757	
EBLT	100	1.00	1.00	100	0	100	*
WBL	784	1.00	0.60	470	0	470	*
					Critical Volume	2113	F
					V/C	1.36	

Maryland State Highway Administration
Turning Movement Summary and
Level of Service

Count Date:
Conditions: Future SATURDAY
Design Year: 2022

Location: MD 355 @ Bou Ave.
Computed By: LL
Date: 3/27/14

Montgomery County Method

Morning Peak Hour 7:15-8:15 am

Lane Configuration

Evening Peak Hour 5:00-6:00 pm

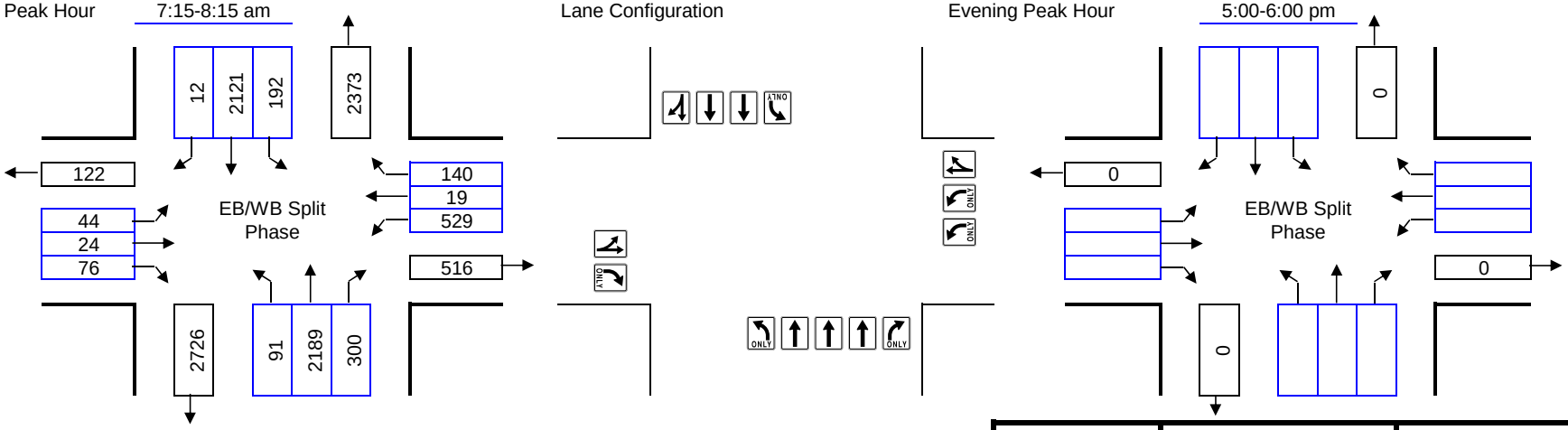

Right Turns Subtracted for Exclusive Right Turn Overlap Phasing or Right Turn on Red:

	AM	PM
NB Approach:	NB	NB
SB Approach:	SB	SB
EB Approach:	EB 76	EB
WB Approach:	WB	WB

Number of Lanes	Lane Use Factor		Opposing Volume (vph)		PCE
1 =	1.00	Congestion Standard	≤	199	1.1
2 =	0.53	= 1550	≤	599	2.0
3 =	0.37	for	≤	799	3.0
4 =	0.30	North Bethesda	≤	999	4.0
Dbl-left	0.60	Policy	≥	1000	5.0
		Area			

Movement	Volume	PCE	Lane Use Factor	Lane Volume	Opposing Lefts	Critical Lane Volume	*
NBT + SBL	2189	1.00	0.37	810	192	1002	*
SBTR + NBL	2133	1.00	0.37	789	91	880	
EBLT	68	1.00	1.00	68	0	68	*
WBL	529	1.00	0.60	317	0	317	*
					Critical Volume	1387	OK
					V/C	0.89	

Movement	Volume	PCE	Lane Use Factor	Lane Volume	Opposing Lefts	Critical Lane Volume	*
					Critical Volume	0	OK
					V/C	0.00	

Maryland State Highway Administration
Turning Movement Summary and
Level of Service

Count Date:
Conditions: Future
Design Year: 2022

Location: MD 355 @ Hubbard Dr.
Computed By: JB
Date: 4/4/14

Montgomery County Method

Morning Peak Hour 7:15-8:15 am

Lane Configuration

Evening Peak Hour 5:00-6:00 pm

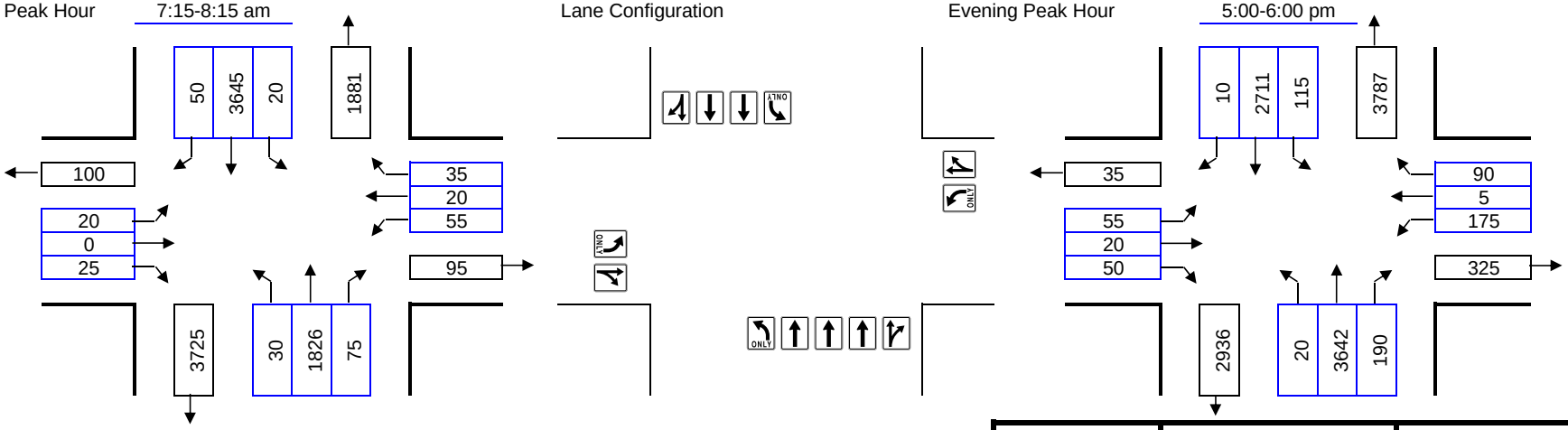

Right Turns Subtracted for Exclusive Right Turn Overlap Phasing or Right Turn on Red:

	AM	PM
NB Approach:	NB	NB
SB Approach:	SB	SB
EB Approach:	EB	EB
WB Approach:	WB	WB

Number of Lanes	Lane Use Factor		Opposing Volume (vph)	PCE
1 =	1.00	Congestion Standard	≤ 199	1.1
2 =	0.53	= 1550	≤ 599	2.0
3 =	0.37	for	≤ 799	3.0
4 =	0.30	North Bethesda	≤ 999	4.0
Dbl-left	0.60	Policy	≥ 1000	5.0
		Area		

Movement	Volume	PCE	Lane Use Factor	Lane Volume	Opposing Lefts	Critical Lane Volume	*
NBTR + SBL	1901	1.00	0.30	570	20	590	
SBTR + NBL	3695	1.00	0.37	1367	30	1397	*
EBTR + WBL	25	1.00	1.00	25	55	80	*
WBTR + EBL	55	1.00	1.00	55	20	75	
					Critical Volume	1477	OK
					V/C	0.95	

Movement	Volume	PCE	Lane Use Factor	Lane Volume	Opposing Lefts	Critical Lane Volume	*
NBTR + SBL	3832	1.00	0.30	1150	115	1265	*
SBTR + NBL	2721	1.00	0.37	1007	20	1027	
EBTR + WBL	70	1.00	1.00	70	175	245	*
WBTR + EBL	95	1.00	1.00	95	55	150	
					Critical Volume	1510	OK
					V/C	0.97	

Maryland State Highway Administration
Turning Movement Summary and
Level of Service

Count Date:
Conditions: Future SATURDAY
Design Year: 2022

Location: MD 355 @ Hubbard Dr.
Computed By: LL
Date: 3/27/14

Montgomery County Method

Morning Peak Hour 7:15-8:15 am

Lane Configuration

Evening Peak Hour 5:00-6:00 pm

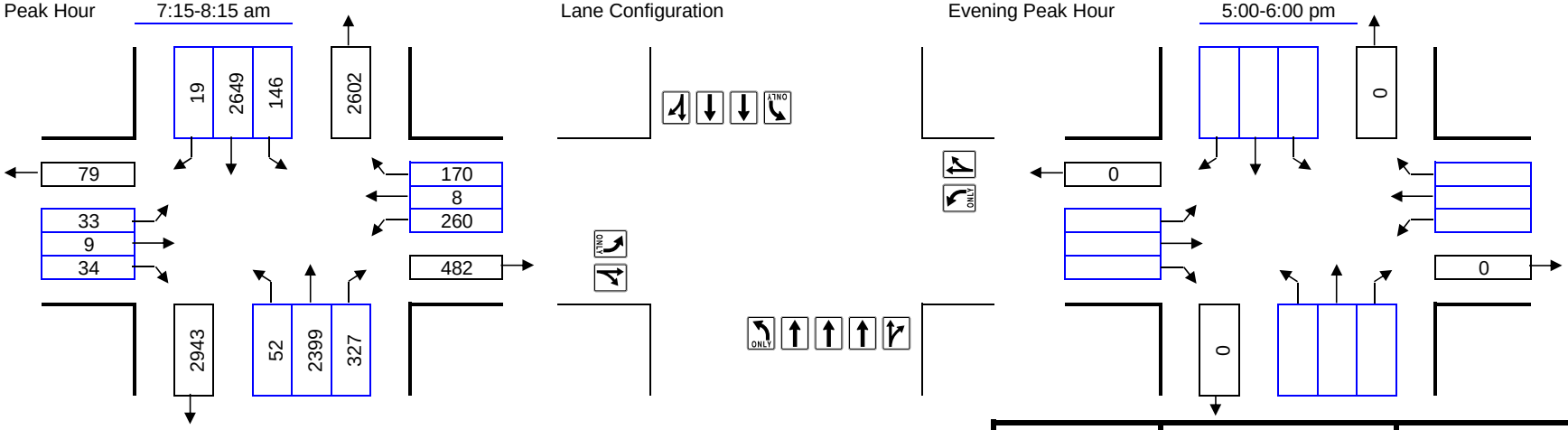

Right Turns Subtracted for Exclusive Right Turn Overlap Phasing or Right Turn on Red:

	AM	PM
NB Approach:	NB	NB
SB Approach:	SB	SB
EB Approach:	EB	EB
WB Approach:	WB	WB

Number of Lanes	Lane Use Factor		Opposing Volume (vph)		PCE
1 =	1.00	Congestion Standard	≤	199	1.1
2 =	0.53	= 1550	≤	599	2.0
3 =	0.37	for	≤	799	3.0
4 =	0.30	North Bethesda	≤	999	4.0
Dbl-left	0.60	Policy	≥	1000	5.0
		Area			

Movement	Volume	PCE	Lane Use Factor	Lane Volume	Opposing Lefts	Critical Lane Volume	*
NBTR + SBL	2726	1.00	0.30	818	146	964	
SBTR + NBL	2668	1.00	0.37	987	52	1039	*
EBTR + WBL	43	1.00	1.00	43	260	303	*
WBTR + EBL	178	1.00	1.00	178	33	211	
					Critical Volume	1342	OK
						V/C	0.87

Movement	Volume	PCE	Lane Use Factor	Lane Volume	Opposing Lefts	Critical Lane Volume	*
					Critical Volume	0	OK
						V/C	0.00

Maryland State Highway Administration
Turning Movement Summary and
Level of Service

Count Date:
Conditions: Future
Design Year: 2022

Location: Montrose Pkwy. @ MD 355 NB On Ramp
Computed By: JB
Date: 3/27/14

Montgomery County Method

Morning Peak Hour 7:15-8:15 am

Lane Configuration

Evening Peak Hour 5:00-6:00 pm

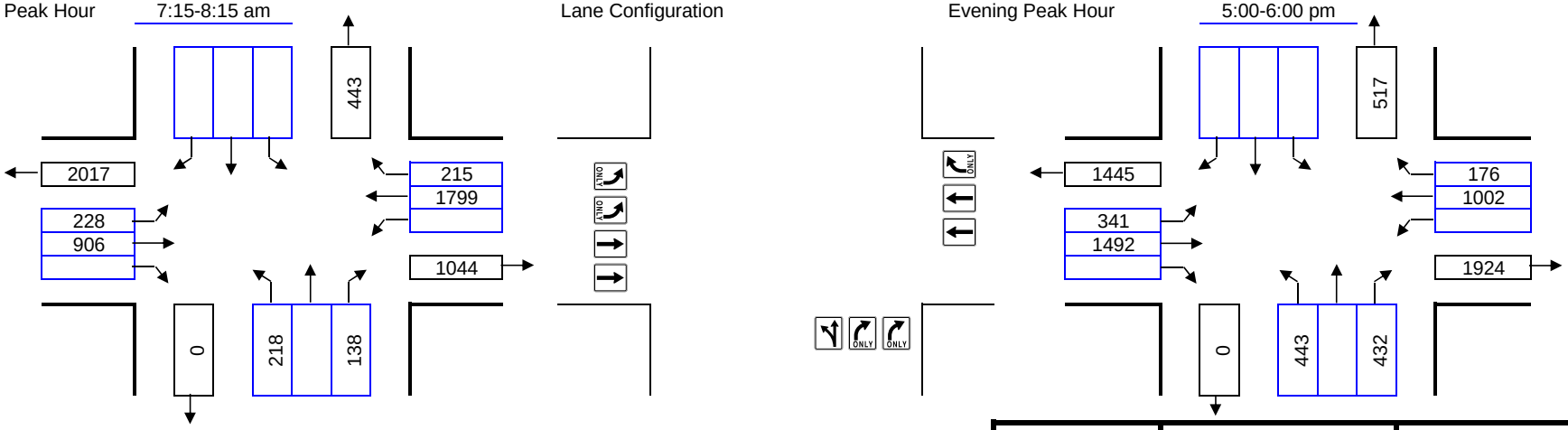

Right Turns Subtracted for Exclusive Right Turn
Overlap Phasing or Right Turn on Red:

	AM	PM
NB Approach:	NB	NB
SB Approach:	SB	SB
EB Approach:	EB	EB
WB Approach:	WB	WB

Number of Lanes	Lane Use Factor		Opposing Volume (vph)		PCE
1 =	1.00	Congestion Standard	≤	199	1.1
2 =	0.53	= 1800	≤	599	2.0
3 =	0.37	for	≤	799	3.0
4 =	0.30	White Flint	≤	999	4.0
Dbl-left	0.60	Policy	≥	1000	5.0
		Area			

Movement	Volume	PCE	Lane Use Factor	Lane Volume	Opposing Lefts	Critical Lane Volume	*
NBLT	218	1.00	1.00	218	0	218	*
EBT	906	1.00	0.53	480	0	480	
WBT + EBL	1799	1.00	0.53	953	137	1090	*
					Critical Volume	1308	OK
						V/C	0.73

Movement	Volume	PCE	Lane Use Factor	Lane Volume	Opposing Lefts	Critical Lane Volume	*
NBLT	443	1.00	1.00	443	0	443	*
EBT	1492	1.00	0.53	791	0	791	*
WBT + EBL	1002	1.00	0.53	531	205	736	
					Critical Volume	1234	OK
						V/C	0.69

Maryland State Highway Administration
Turning Movement Summary and
Level of Service

Count Date:
Conditions: Future SATURDAY
Design Year: 2022

Location: Montrose Pkwy. @ MD 355 NB On Ramp
Computed By: LL
Date: 3/27/14

Montgomery County Method

Morning Peak Hour 7:15-8:15 am

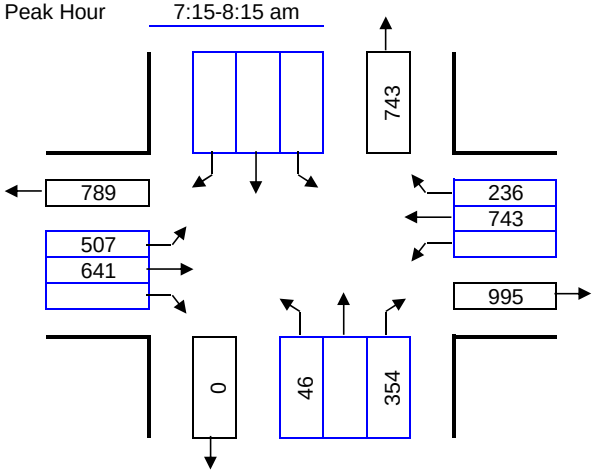

Lane Configuration

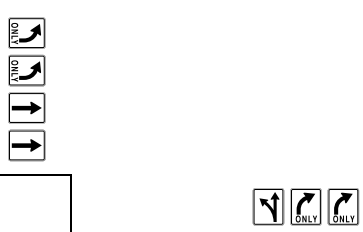

Evening Peak Hour 5:00-6:00 pm

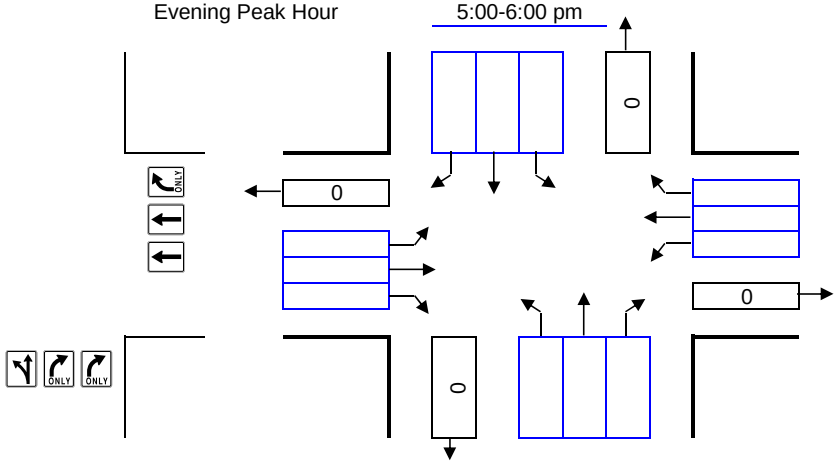

Right Turns Subtracted for Exclusive Right Turn Overlap Phasing or Right Turn on Red:

	AM	PM
NB Approach:	NB	NB
SB Approach:	SB	SB
EB Approach:	EB	EB
WB Approach:	WB	WB

Number of Lanes	Lane Use Factor		Opposing Volume (vph)		PCE
1 =	1.00	Congestion Standard	≤	199	1.1
2 =	0.53	= 1800	≤	599	2.0
3 =	0.37	for	≤	799	3.0
4 =	0.30	White Flint	≤	999	4.0
Dbl-left	0.60	Policy Area	≥	1000	5.0

Movement	Volume	PCE	Lane Use Factor	Lane Volume	Opposing Lefts	Critical Lane Volume	*
NBR	354	1.00	0.53	188	0	188	*
EBT	641	1.00	0.53	340	0	340	
WBT + EBL	743	1.00	0.53	394	304	698	*
					Critical Volume	886	OK
					V/C	0.49	

Movement	Volume	PCE	Lane Use Factor	Lane Volume	Opposing Lefts	Critical Lane Volume	*
					Critical Volume	0	OK
					V/C	0.00	

Maryland State Highway Administration
Turning Movement Summary and
Level of Service

Count Date:
Conditions: Future
Design Year: 2022

Location: MD 355 @ Old Georgetown Road
Computed By: BJB
Date: 3/27/14

Montgomery County Method

Morning Peak Hour 7:15-8:15 am

Lane Configuration

Evening Peak Hour 5:00-6:00 pm

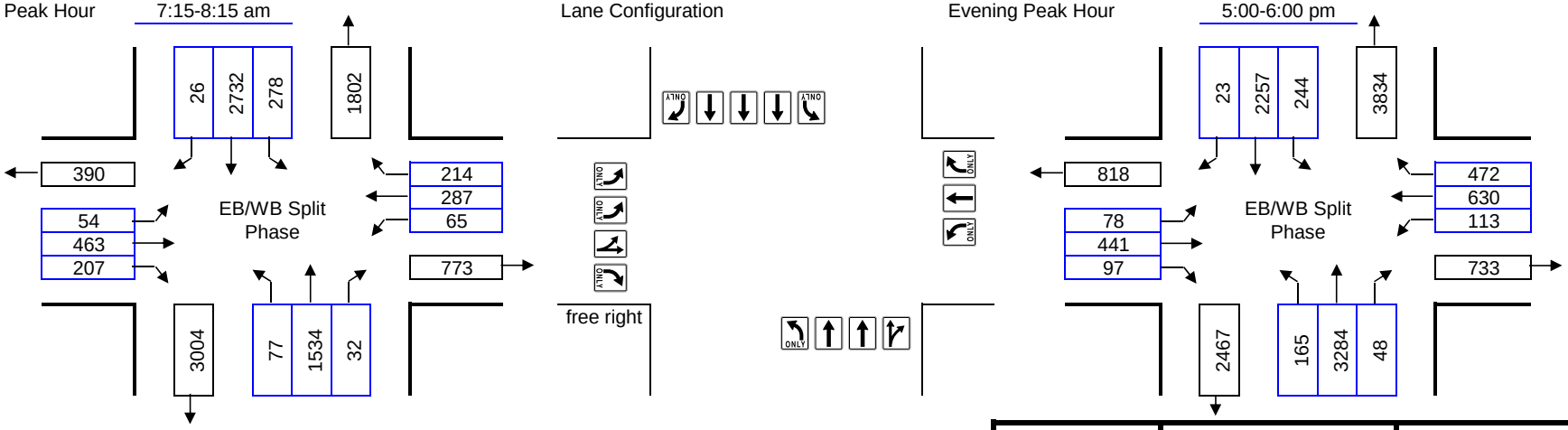

Right Turns Subtracted for Exclusive Right Turn
Overlap Phasing or Right Turn on Red:

	AM	PM
NB Approach:	NB	NB
SB Approach:	SB	SB
EB Approach:	EB 207	EB
WB Approach:	WB	WB

Number of Lanes	Lane Use Factor		Opposing Volume (vph)		PCE
1 =	1.00	Congestion Standard	≤	199	1.1
2 =	0.53	= 1800	≤	599	2.0
3 =	0.37	for	≤	799	3.0
4 =	0.30	White Flint	≤	999	4.0
Dbl-left	0.60	Policy	≥	1000	5.0
		Area			

Movement	Volume	PCE	Lane Use Factor	Lane Volume	Opposing Lefts	Critical Lane Volume	*
NBTR + SBL	1566	1.00	0.37	579	278	857	
SBT + NBL	2732	1.00	0.37	1011	77	1088	*
EBLT	517	1.00	0.37	191	0	191	*
WBT	287	1.00	1.00	287	0	287	*
					Critical Volume	1566	OK
					V/C	0.87	

Movement	Volume	PCE	Lane Use Factor	Lane Volume	Opposing Lefts	Critical Lane Volume	*
NBTR + SBL	3332	1.00	0.37	1233	244	1477	*
SBT + NBL	2257	1.00	0.37	835	165	1000	
EBLT	519	1.00	0.37	192	0	192	*
WBT	630	1.00	1.00	630	0	630	*
					Critical Volume	2299	F
					V/C	1.28	

Maryland State Highway Administration
Turning Movement Summary and
Level of Service

Count Date:
Conditions: Future SATURDAY
Design Year: 2022

Location: MD 355 @ Old Georgetown Road
Computed By: LL
Date: 3/27/14

Montgomery County Method

Morning Peak Hour 7:15-8:15 am

Lane Configuration

Evening Peak Hour 5:00-6:00 pm

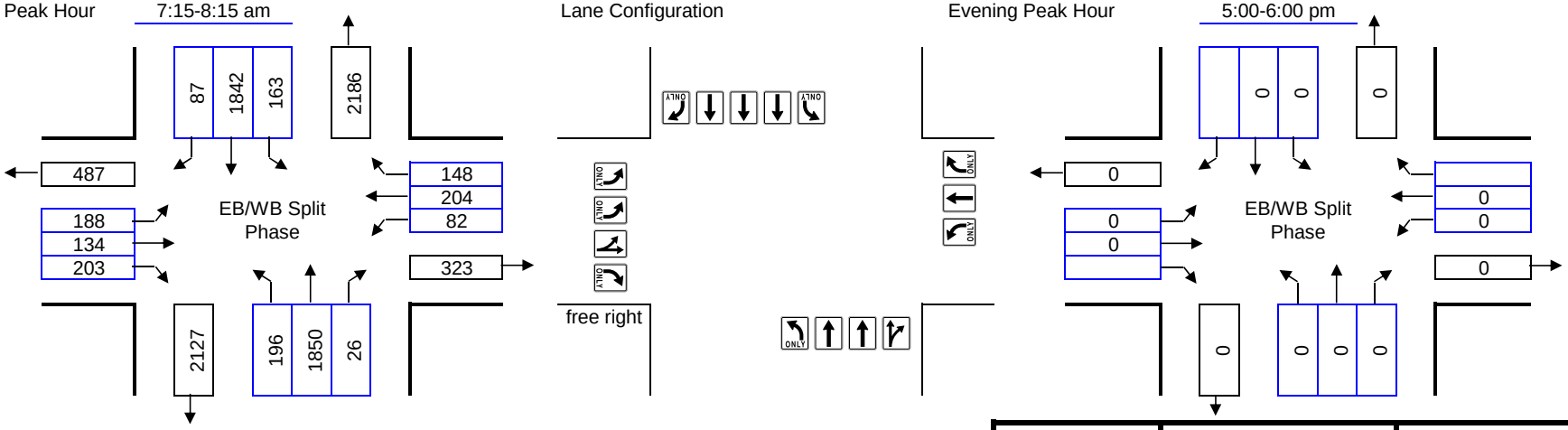

Right Turns Subtracted for Exclusive Right Turn Overlap Phasing or Right Turn on Red:

	AM		PM	
NB Approach:	NB		NB	
SB Approach:	SB		SB	
EB Approach:	EB	203	EB	
WB Approach:	WB		WB	

Number of Lanes	Lane Use Factor		Opposing Volume (vph)		PCE
1 =	1.00	Congestion Standard	≤	199	1.1
2 =	0.53	= 1800	≤	599	2.0
3 =	0.37	for	≤	799	3.0
4 =	0.30	White Flint	≤	999	4.0
Dbl-left	0.60	Policy	≥	1000	5.0
		Area			

Movement	Volume	PCE	Lane Use Factor	Lane Volume	Opposing Lefts	Critical Lane Volume	*
NBTR + SBL	1876	1.00	0.37	694	163	857	
SBT + NBL	1842	1.00	0.37	682	196	878	*
EBLT	322	1.00	0.37	119	0	119	*
WBT	204	1.00	1.00	204	0	204	*
					Critical Volume	1201	OK
					V/C	0.67	

Movement	Volume	PCE	Lane Use Factor	Lane Volume	Opposing Lefts	Critical Lane Volume	*
					Critical Volume	0	OK
					V/C	0.00	

Maryland State Highway Administration
Turning Movement Summary and
Level of Service

Count Date:
Conditions: Future
Design Year: 2022

Location: MD 355 @ Marinelli Rd
Computed By: BJM
Date: 3/27/14

Montgomery County Method

Morning Peak Hour 7:00-8:00 am

Lane Configuration

Evening Peak Hour 5:00-6:00 pm

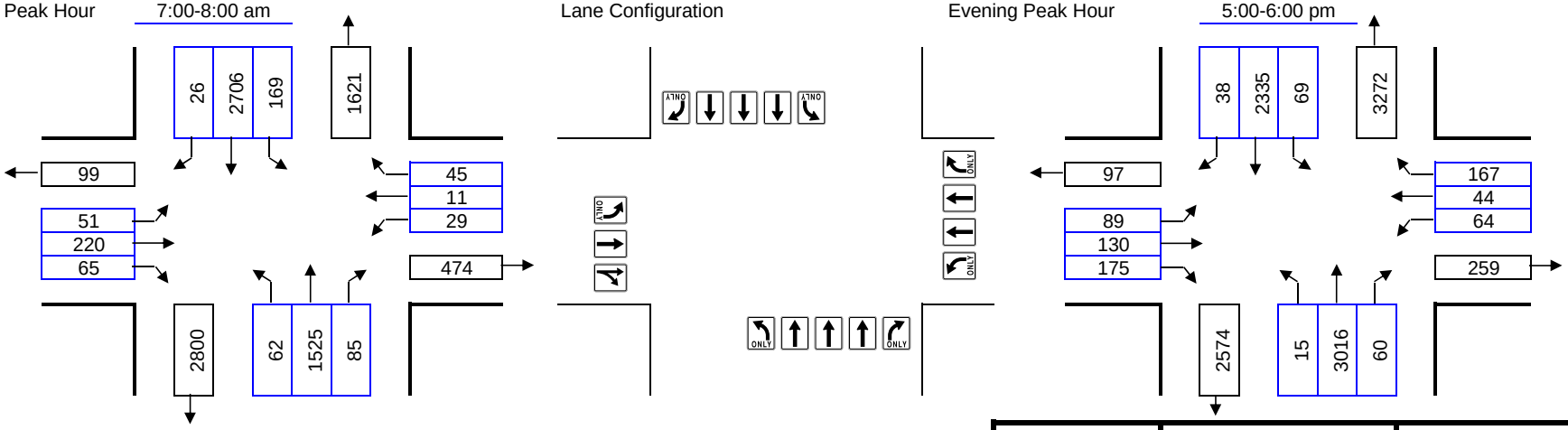

Right Turns Subtracted for Exclusive Right Turn Overlap Phasing or Right Turn on Red:

	AM	PM
NB Approach:	NB	NB
SB Approach:	SB	SB
EB Approach:	EB	EB
WB Approach:	WB	WB 69

Number of Lanes	Lane Use Factor		Opposing Volume (vph)		PCE
1 =	1.00	Congestion Standard	≤	199	1.1
2 =	0.53	= 1800	≤	599	2.0
3 =	0.37	for	≤	799	3.0
4 =	0.30	White Flint	≤	999	4.0
Dbl-left	0.60	Policy Area	≥	1000	5.0

Movement	Volume	PCE	Lane Use Factor	Lane Volume	Opposing Lefts	Critical Lane Volume	*
NBT + SBL	1525	1.00	0.37	564	169	733	
SBT + NBL	2706	1.00	0.37	1001	62	1063	*
EBTR + WBL	285	1.00	0.53	151	29	180	*
WBR + EBL	45	1.00	1.00	45	51	96	
					Critical Volume	1243	OK
					V/C	0.69	

Movement	Volume	PCE	Lane Use Factor	Lane Volume	Opposing Lefts	Critical Lane Volume	*
NBT + SBL	3016	1.00	0.37	1116	69	1185	*
SBT + NBL	2335	1.00	0.37	864	15	879	
EBR + WBL	175	1.00	1.00	175	64	239	*
WBR + EBL	98	1.00	1.00	98	89	187	
					Critical Volume	1424	OK
					V/C	0.79	

De facto RT lane(s) assumed for EB approach.

Maryland State Highway Administration
Turning Movement Summary and
Level of Service

Count Date:
Conditions: Future SATURDAY
Design Year: 2022

Location: MD 355 @ Marinelli Rd
Computed By: LL
Date: 3/27/14

Montgomery County Method

Morning Peak Hour 7:00-8:00 am

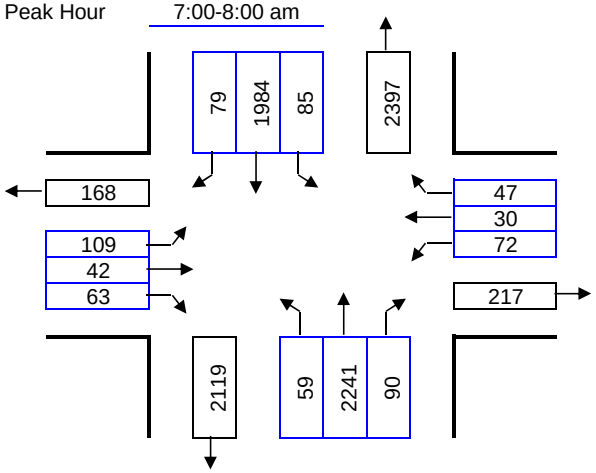

Lane Configuration

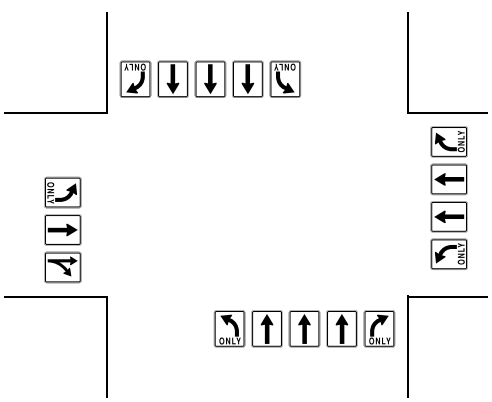

Evening Peak Hour 5:00-6:00 pm

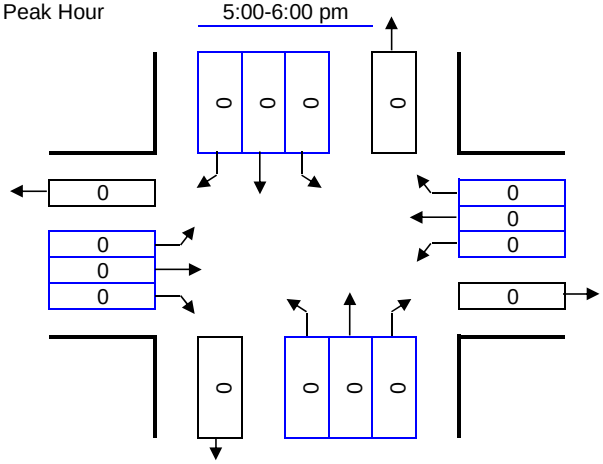

Right Turns Subtracted for Exclusive Right Turn Overlap Phasing or Right Turn on Red:

	AM	PM
NB Approach:	NB	NB
SB Approach:	SB	SB
EB Approach:	EB	EB
WB Approach:	WB 47	WB

Number of Lanes	Lane Use Factor		Opposing Volume (vph)		PCE
1 =	1.00	Congestion Standard	≤	199	1.1
2 =	0.53	= 1800	≤	599	2.0
3 =	0.37	for	≤	799	3.0
4 =	0.30	White Flint	≤	999	4.0
Dbl-left	0.60	Policy Area	≥	1000	5.0

Movement	Volume	PCE	Lane Use Factor	Lane Volume	Opposing Lefts	Critical Lane Volume	*
NBT + SBL	2241	1.00	0.37	829	85	914	*
SBT + NBL	1984	1.00	0.37	734	59	793	
EBR + WBL	63	1.00	1.00	63	72	135	*
WBT + EBL	30	1.00	0.53	16	109	125	
					Critical Volume	1049	OK
					V/C	0.58	

De facto RT lane(s) assumed for EB approach.

Movement	Volume	PCE	Lane Use Factor	Lane Volume	Opposing Lefts	Critical Lane Volume	*
					Critical Volume	0	OK
					V/C	0.00	

Maryland State Highway Administration
Turning Movement Summary and
Level of Service

Count Date:
Conditions: Future
Design Year: 2022

Location: MD 355 @ Nicholson Ln.
Computed By: BJM
Date: 4/7/14

Montgomery County Method

Morning Peak Hour 7:00-8:00 am

Lane Configuration

Evening Peak Hour 5:00-6:00 pm

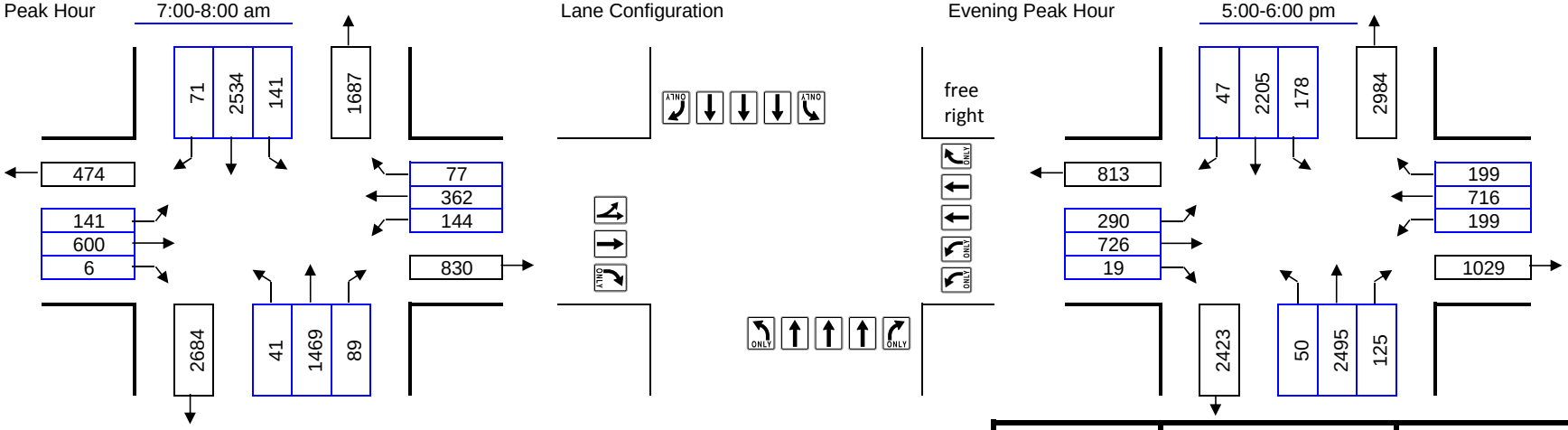

Right Turns Subtracted for Exclusive Right Turn
Overlap Phasing or Right Turn on Red:

	AM	PM
NB Approach:	NB	NB
SB Approach:	SB	SB
EB Approach:	EB	EB
WB Approach:	WB	WB

Number of Lanes	Lane Use Factor		Opposing Volume (vph)		PCE
1 =	1.00	Congestion Standard	≤	199	1.1
2 =	0.53	= 1800	≤	599	2.0
3 =	0.37	for	≤	799	3.0
4 =	0.30	White Flint	≤	999	4.0
Dbl-left	0.60	Policy	≥	1000	5.0
		Area			

Movement	Volume	PCE	Lane Use Factor	Lane Volume	Opposing Lefts	Critical Lane Volume	*
NBT + SBL	1469	1.00	0.37	544	141	685	
SBT + NBL	2534	1.00	0.37	938	41	979	*
EBLT + WBL	741	1.00	0.53	393	86	479	*
WBT + EBL	362	1.00	0.53	192	141	333	
					Critical Volume	1458	OK
					V/C	0.81	

Movement	Volume	PCE	Lane Use Factor	Lane Volume	Opposing Lefts	Critical Lane Volume	*
NBT + SBL	2495	1.00	0.37	923	178	1101	*
SBT + NBL	2205	1.00	0.37	816	50	866	
EBT + WBL	1016	1.00	1.00	1016	119	1135	*
WBT + EBL	716	1.00	0.53	379	290	669	
					Critical Volume	2236	F
					V/C	1.24	

De facto LT lane(s) assumed for EB approach.

Maryland State Highway Administration
Turning Movement Summary and
Level of Service

Count Date:
Conditions: Future SATURDAY
Design Year: 2022

Location: MD 355 @ Nicholson Ln
Computed By: LL
Date: 3/27/14

Montgomery County Method

Morning Peak Hour 7:00-8:00 am

Lane Configuration

Evening Peak Hour 5:00-6:00 pm

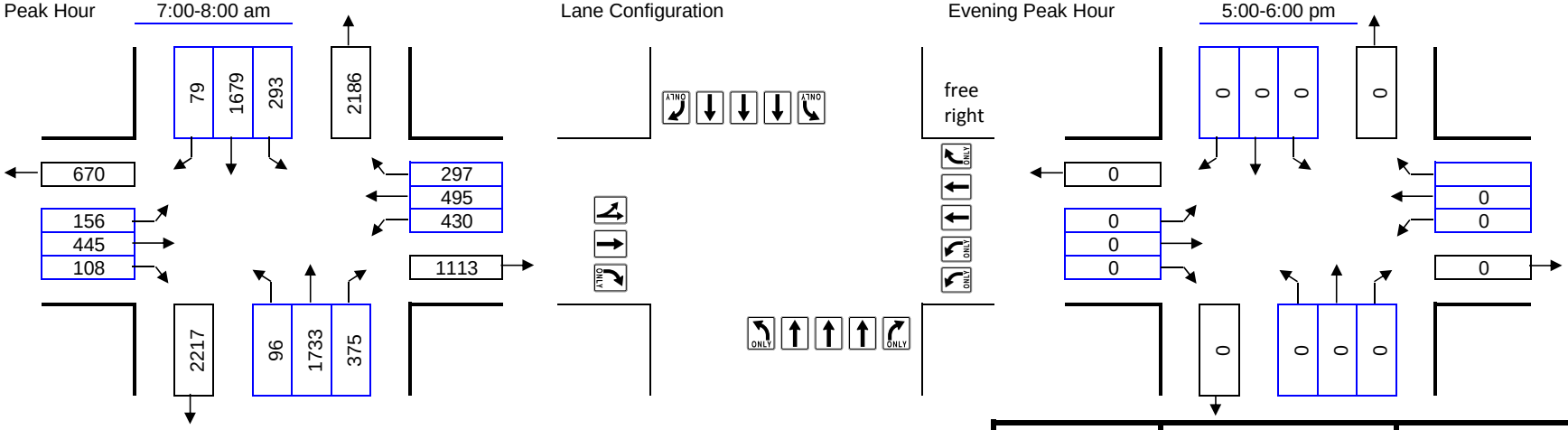

Right Turns Subtracted for Exclusive Right Turn
Overlap Phasing or Right Turn on Red:

	AM	PM
NB Approach:	NB	NB
SB Approach:	SB	SB
EB Approach:	EB	EB
WB Approach:	WB	WB

Number of Lanes	Lane Use Factor		Opposing Volume (vph)		PCE
1 =	1.00	Congestion Standard	≤	199	1.1
2 =	0.53	= 1800	≤	599	2.0
3 =	0.37	for	≤	799	3.0
4 =	0.30	White Flint	≤	999	4.0
Dbl-left	0.60	Policy	≥	1000	5.0
		Area			

Movement	Volume	PCE	Lane Use Factor	Lane Volume	Opposing Lefts	Critical Lane Volume	*
NBT + SBL	1733	1.00	0.37	641	293	934	*
SBT + NBL	1679	1.00	0.37	621	96	717	
EBLT + WBL	601	1.00	0.53	319	258	577	*
WBR + EBL	297	1.00	1.00	297	156	453	
					Critical Volume	1511	OK
					V/C	0.84	

Movement	Volume	PCE	Lane Use Factor	Lane Volume	Opposing Lefts	Critical Lane Volume	*
					Critical Volume	0	OK
					V/C	0.00	

Maryland State Highway Administration
Turning Movement Summary and
Level of Service

Count Date:
Conditions: Future
Design Year: 2022

Location: MD 355 @ Security La.
Computed By: BJM
Date: 3/27/14

Montgomery County Method

Morning Peak Hour 7:15-8:15 am

Lane Configuration

Evening Peak Hour 5:00-6:00 pm

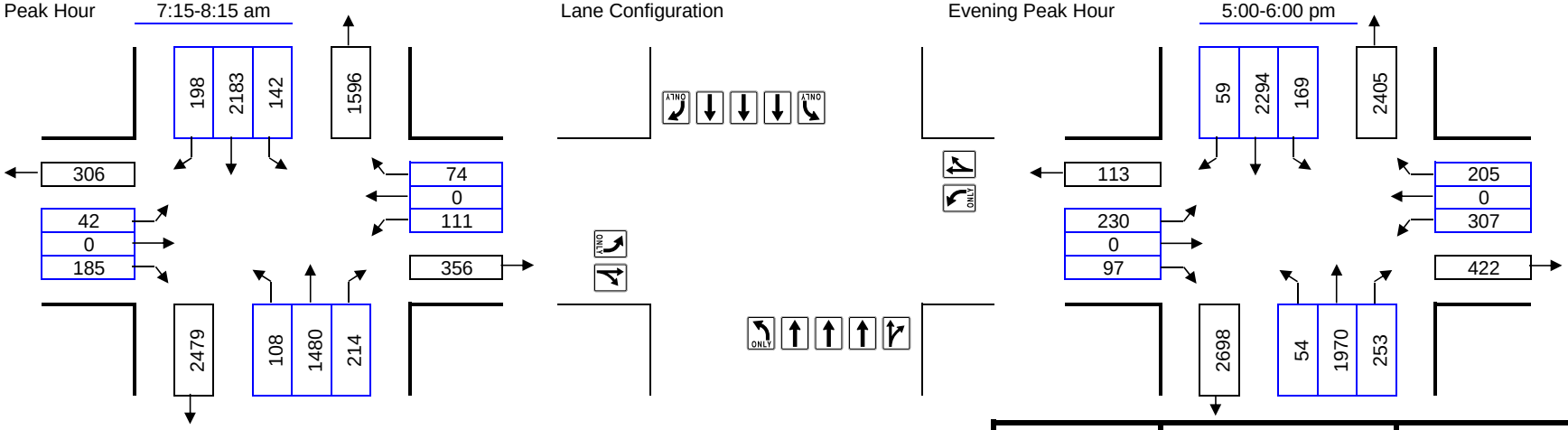

Right Turns Subtracted for Exclusive Right Turn Overlap Phasing or Right Turn on Red:

	AM	PM
NB Approach:	NB	NB
SB Approach:	SB	SB
EB Approach:	EB	EB
WB Approach:	WB	WB

Number of Lanes	Lane Use Factor		Opposing Volume (vph)		PCE
1 =	1.00	Congestion Standard	≤	199	1.1
2 =	0.53	= 1800	≤	599	2.0
3 =	0.37	for	≤	799	3.0
4 =	0.30	White Flint	≤	999	4.0
Dbl-left	0.60	Policy	≥	1000	5.0
		Area			

Movement	Volume	PCE	Lane Use Factor	Lane Volume	Opposing Lefts	Critical Lane Volume	*
NBTR + SBL	1694	1.00	0.30	508	142	650	
SBT + NBL	2183	1.00	0.37	808	108	916	*
EBTR + WBL	185	1.00	1.00	185	111	296	*
WBTR + EBL	74	1.00	1.00	74	42	116	
					Critical Volume	1212	OK
					V/C	0.67	

Movement	Volume	PCE	Lane Use Factor	Lane Volume	Opposing Lefts	Critical Lane Volume	*
NBTR + SBL	2223	1.00	0.30	667	169	836	
SBT + NBL	2294	1.00	0.37	849	54	903	*
EBTR + WBL	97	1.00	1.00	97	307	404	
WBTR + EBL	205	1.00	1.00	205	230	435	*
					Critical Volume	1338	OK
					V/C	0.74	

Maryland State Highway Administration
Turning Movement Summary and
Level of Service

Count Date:
Conditions: Future SATURDAY
Design Year: 2022

Location: MD 355 @ Security La.
Computed By: LL
Date: 3/27/14

Montgomery County Method

Morning Peak Hour 7:15-8:15 am

Lane Configuration

Evening Peak Hour 5:00-6:00 pm

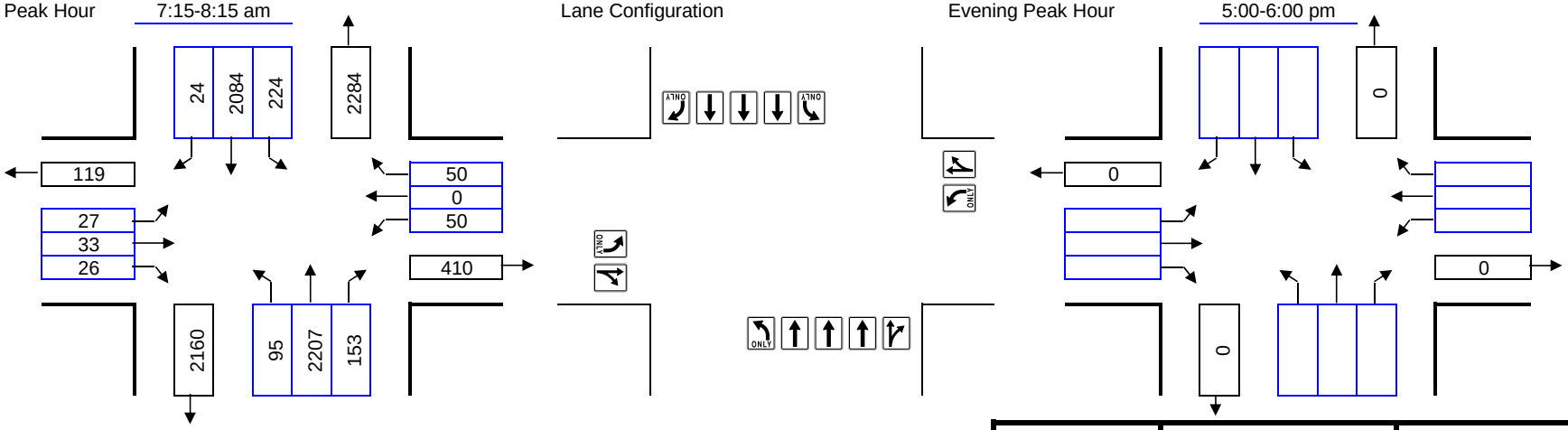

Right Turns Subtracted for Exclusive Right Turn Overlap Phasing or Right Turn on Red:

	AM	PM
NB Approach:	NB	NB
SB Approach:	SB	SB
EB Approach:	EB	EB
WB Approach:	WB	WB

Number of Lanes	Lane Use Factor		Opposing Volume (vph)		PCE
1 =	1.00	Congestion Standard	≤	199	1.1
2 =	0.53	= 1800	≤	599	2.0
3 =	0.37	for	≤	799	3.0
4 =	0.30	White Flint	≤	999	4.0
Dbl-left	0.60	Policy	≥	1000	5.0
		Area			

Movement	Volume	PCE	Lane Use Factor	Lane Volume	Opposing Lefts	Critical Lane Volume	*
NBTR + SBL	2360	1.00	0.30	708	224	932	*
SBT + NBL	2084	1.00	0.37	771	95	866	
EBTR + WBL	59	1.00	1.00	59	50	109	*
WBTR + EBL	50	1.00	1.00	50	27	77	
					Critical Volume	1041	OK
					V/C	0.58	

Movement	Volume	PCE	Lane Use Factor	Lane Volume	Opposing Lefts	Critical Lane Volume	*
					Critical Volume	0	OK
					V/C	0.00	

Maryland State Highway Administration
Turning Movement Summary and
Level of Service

Count Date:
Conditions: Future
Design Year: 2022

Location: MD 355 @ Edson La.
Computed By: LL
Date: 4/7/14

Montgomery County Method

Morning Peak Hour 7:15-8:15 am

Lane Configuration

Evening Peak Hour 5:00-6:00 pm

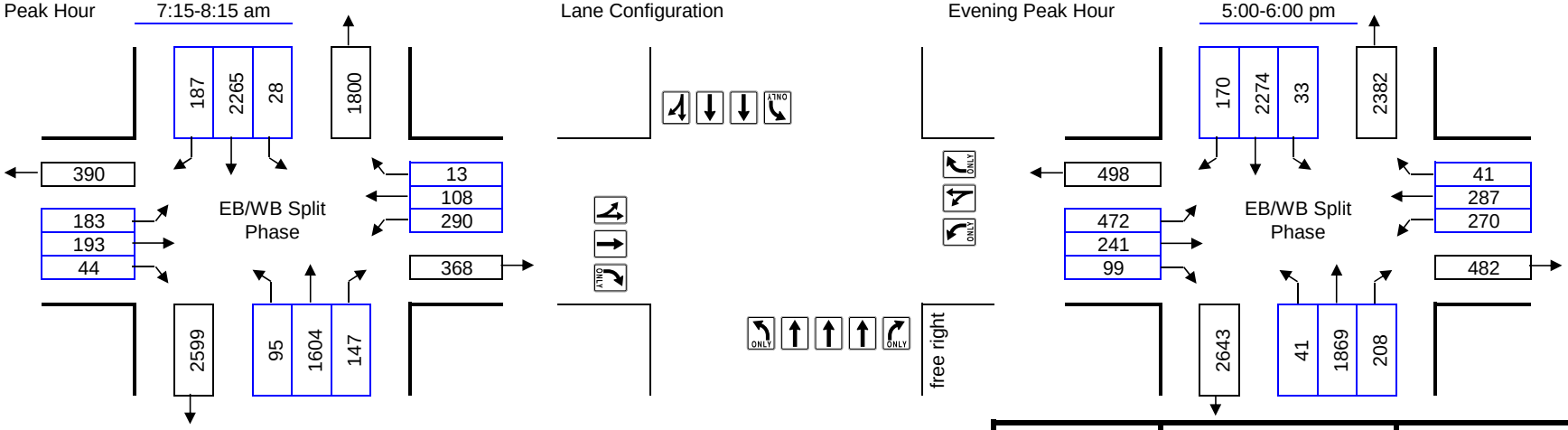

Right Turns Subtracted for Exclusive Right Turn Overlap Phasing or Right Turn on Red:

	AM	PM
NB Approach:	NB	NB
SB Approach:	SB	SB
EB Approach:	EB	EB
WB Approach:	WB	WB

Number of Lanes	Lane Use Factor		Opposing Volume (vph)		PCE
1 =	1.00	Congestion Standard	≤	199	1.1
2 =	0.53	= 1800	≤	599	2.0
3 =	0.37	for	≤	799	3.0
4 =	0.30	White Flint	≤	999	4.0
Dbl-left	0.60	Policy Area	≥	1000	5.0

Movement	Volume	PCE	Lane Use Factor	Lane Volume	Opposing Lefts	Critical Lane Volume	*
NBT + SBL	1604	1.00	0.37	593	28	621	
SBTR + NBL	2452	1.00	0.37	907	95	1002	*
EBLT	376	1.00	0.53	199	0	199	*
WBLT	398	1.00	0.60	239	0	239	*
					Critical Volume	1440	OK
					V/C	0.80	

Movement	Volume	PCE	Lane Use Factor	Lane Volume	Opposing Lefts	Critical Lane Volume	*
NBT + SBL	1869	1.00	0.37	692	33	725	
SBTR + NBL	2444	1.00	0.37	904	41	945	*
EBL	472	1.00	1.00	472	0	472	*
WBLT	557	1.00	0.60	334	0	334	*
					Critical Volume	1751	OK
					V/C	0.97	

De facto LT lane(s) assumed for EB approach.

Maryland State Highway Administration
Turning Movement Summary and
Level of Service

Count Date:
Conditions: Future Saturday
Design Year: 2022

Location: MD 355 @ Edson La.
Computed By: LL
Date: 4/7/14

Montgomery County Method

Morning Peak Hour 7:00-8:00 am

Lane Configuration

Evening Peak Hour 5:00-6:00 pm

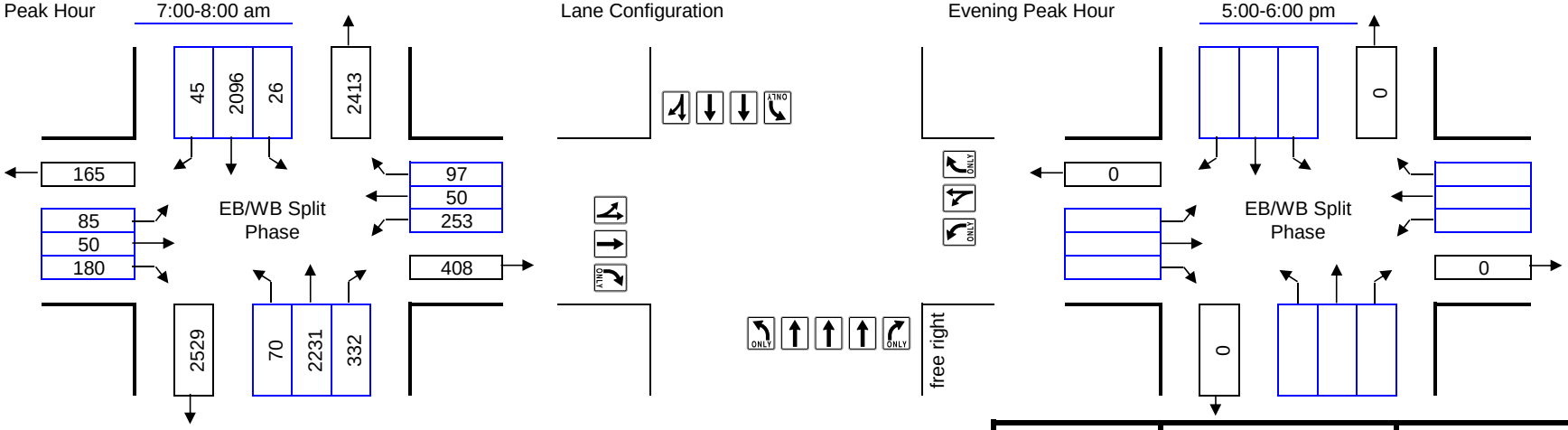

Right Turns Subtracted for Exclusive Right Turn Overlap Phasing or Right Turn on Red:

	AM		PM	
NB Approach:	NB		NB	
SB Approach:	SB		SB	
EB Approach:	EB	70	EB	
WB Approach:	WB		WB	

Number of Lanes	Lane Use Factor		Opposing Volume (vph)		PCE
1 =	1.00	Congestion Standard	≤	199	1.1
2 =	0.53	= 1800	≤	599	2.0
3 =	0.37	for	≤	799	3.0
4 =	0.30	White Flint	≤	999	4.0
Dbl-left	0.60	Policy	≥	1000	5.0
		Area			

Movement	Volume	PCE	Lane Use Factor	Lane Volume	Opposing Lefts	Critical Lane Volume	*
NBT + SBL	2231	1.00	0.37	825	26	851	
SBTR + NBL	2141	1.00	0.37	792	70	862	*
EBR	110	1.00	1.00	110	0	110	*
WBLT	303	1.00	0.60	182	0	182	*
					Critical Volume	1154	OK
					V/C	0.64	

De facto LT lane(s) assumed for EB approach.

Movement	Volume	PCE	Lane Use Factor	Lane Volume	Opposing Lefts	Critical Lane Volume	*
					Critical Volume	0	OK
					V/C	0.00	

Maryland State Highway Administration
Turning Movement Summary and
Level of Service

Count Date:
Conditions: Future
Design Year: 2022

Location: MD 355 @ MD 547
Computed By: BJM
Date: 3/27/14

Montgomery County Method

Morning Peak Hour 7:00-8:00 am

Lane Configuration

Evening Peak Hour 5:00-6:00 pm

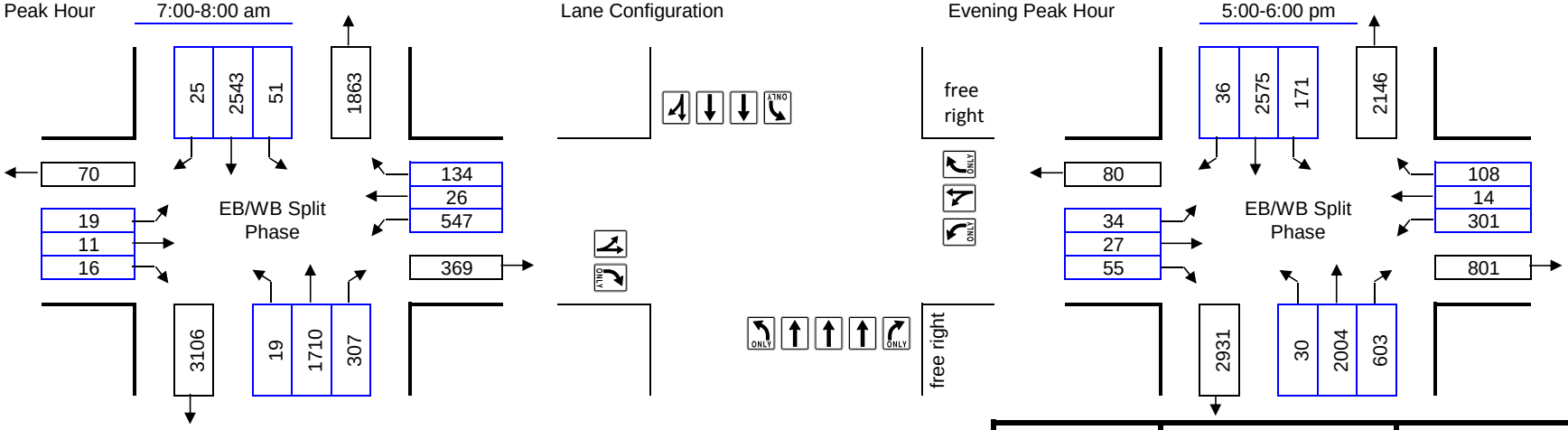

Right Turns Subtracted for Exclusive Right Turn Overlap Phasing or Right Turn on Red:

	AM	PM
NB Approach:	NB	NB
SB Approach:	SB	SB
EB Approach:	EB	EB
WB Approach:	WB	WB

Number of Lanes	Lane Use Factor		Opposing Volume (vph)		PCE
1 =	1.00	Congestion Standard	≤	199	1.1
2 =	0.53	= 1800	≤	599	2.0
3 =	0.37	for	≤	799	3.0
4 =	0.30	Grosvenor	≤	999	4.0
Dbl-left	0.60	Policy Area	≥	1000	5.0

Movement	Volume	PCE	Lane Use Factor	Lane Volume	Opposing Lefts	Critical Lane Volume	*
NBT + SBL	1710	1.00	0.37	633	51	684	
SBTR + NBL	2568	1.00	0.37	950	19	969	*
EBLT	30	1.00	1.00	30	0	30	*
WBLT	573	1.00	0.60	344	0	344	*
					Critical Volume	1343	OK
					V/C	0.75	

Movement	Volume	PCE	Lane Use Factor	Lane Volume	Opposing Lefts	Critical Lane Volume	*
NBT + SBL	2004	1.00	0.37	741	171	912	
SBTR + NBL	2611	1.00	0.37	966	30	996	*
EBLT	61	1.00	1.00	61	0	61	*
WBLT	315	1.00	0.60	189	0	189	*
					Critical Volume	1246	OK
					V/C	0.69	

Maryland State Highway Administration
Turning Movement Summary and
Level of Service

SHA

Count Date:
Conditions: Future SATURDAY
Design Year: 2022

Location: MD 355 @ MD 547

Computed By: LL   Date: 3/27/14

Montgomery County Method

Morning Peak Hour 7:00-8:00 am   Lane Configuration   Evening Peak Hour 5:00-6:00 pm

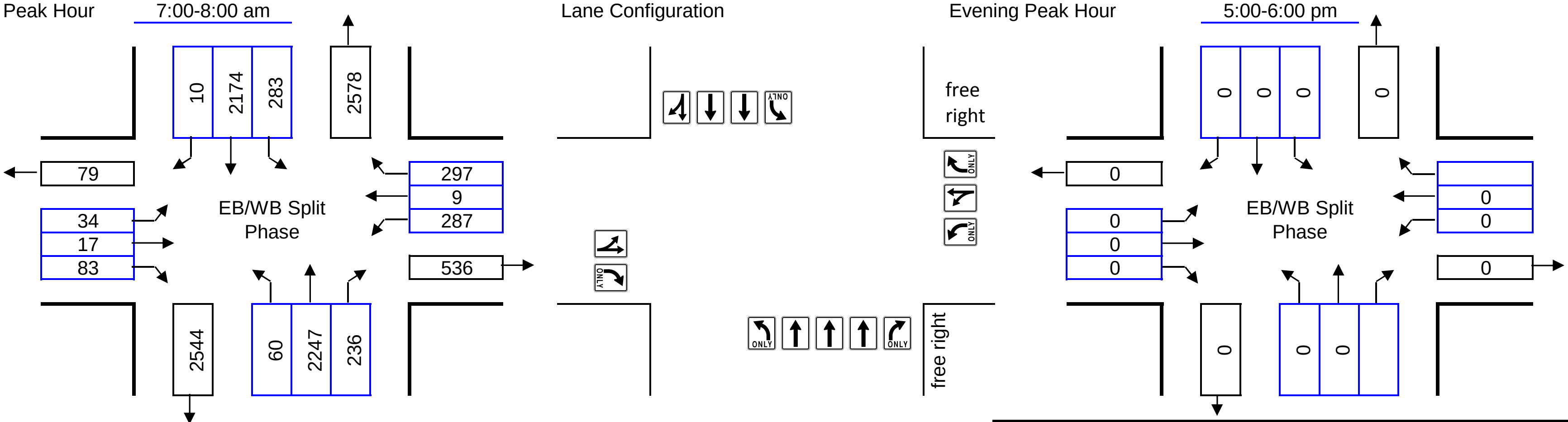

Right Turns Subtracted for Exclusive Right Turn
Overlap Phasing or Right Turn on Red:

NB Approach:	AM	NB		PM NB	
SB Approach:		SB		SB	
EB Approach:		EB	60	EB	
WB Approach:		WB	297	WB	

Number of Lanes	Lane Use Factor
1 =	1.00
2 =	0.53
3 =	0.37
4 =	0.30
Dbl-left	0.60

Congestion Standard = 1800 for Grosvenor Policy Area

Opposing Volume (vph)		PCE
≤	199	1.1
≤	599	2.0
≤	799	3.0
≤	999	4.0
≥	1000	5.0

Movement	Volume	PCE	Lane Use Factor	Lane Volume	Opposing Lefts	Critical Lane Volume	*
NBT + SBL	2247	1.00	0.37	831	283	1114	*
SBTR + NBL	2184	1.00	0.37	808	60	868	
EBLT	51	1.00	1.00	51	0	51	*
WBLT	296	1.00	0.60	178	0	178	*
					Critical Volume	1343	OK
					V/C	0.75	

Movement	Volume	PCE	Lane Use Factor	Lane Volume	Opposing Lefts	Critical Lane Volume	*
					Critical Volume	0	OK
					V/C	0.00	

Maryland State Highway Administration
Turning Movement Summary and
Level of Service

Count Date:
Conditions: Future
Design Year: 2022

Location: MD 355 @ Tuckerman Ln
Computed By: BJM
Date: 3/27/14

Montgomery County Method

Morning Peak Hour 7:00-8:00 am

Lane Configuration

Evening Peak Hour 5:00-6:00 pm

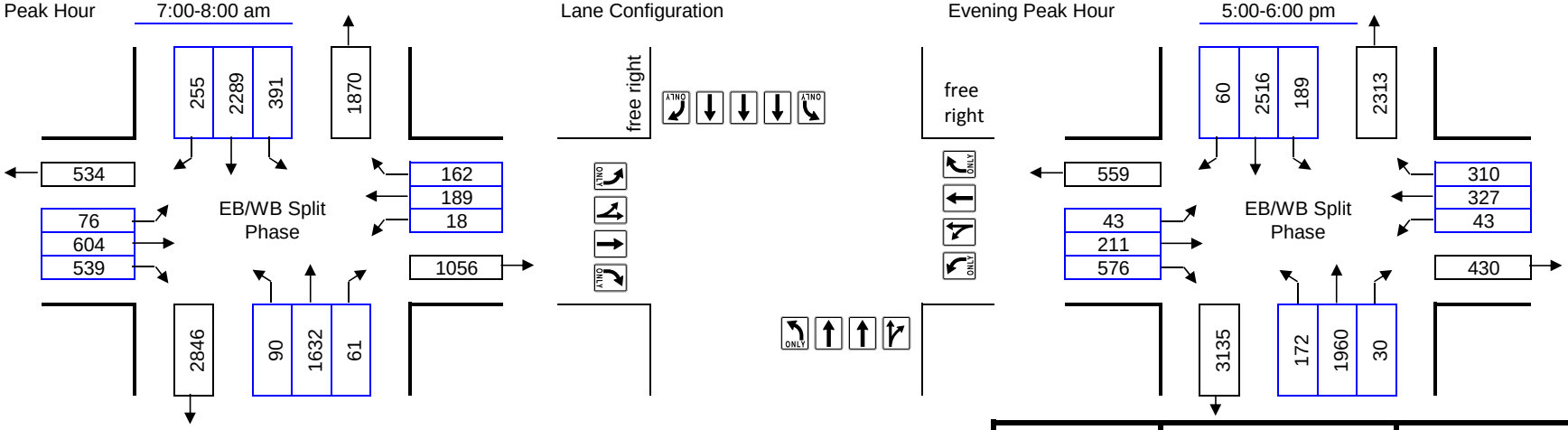

Right Turns Subtracted for Exclusive Right Turn Overlap Phasing or Right Turn on Red:

	AM		PM	
NB Approach:	NB		NB	
SB Approach:	SB		SB	
EB Approach:	EB	90	EB	172
WB Approach:	WB	162	WB	310

Number of Lanes	Lane Use Factor		Opposing Volume (vph)		PCE
1 =	1.00	Congestion Standard	≤	199	1.1
2 =	0.53	= 1800	≤	599	2.0
3 =	0.37	for	≤	799	3.0
4 =	0.30	Grosvenor	≤	999	4.0
Dbl-left	0.60	Policy	≥	1000	5.0
		Area			

Movement	Volume	PCE	Lane Use Factor	Lane Volume	Opposing Lefts	Critical Lane Volume	*
NBTR + SBL	1693	1.00	0.37	626	391	1017	*
SBT + NBL	2289	1.00	0.37	847	90	937	
EBR	449	1.00	1.00	449	0	449	*
WBLT	189	1.00	0.53	100	0	100	*
					Critical Volume	1566	OK
					V/C	0.87	

De facto LT lane(s) assumed for EB approach. De facto through lane(s) assumed for WB approach.

Movement	Volume	PCE	Lane Use Factor	Lane Volume	Opposing Lefts	Critical Lane Volume	*
NBTR + SBL	1990	1.00	0.37	736	189	925	
SBT + NBL	2516	1.00	0.37	931	172	1103	*
EBR	404	1.00	1.00	404	0	404	*
WBLT	327	1.00	0.53	173	0	173	*
					Critical Volume	1680	OK
					V/C	0.93	

De facto through lane(s) assumed for EB and WB approaches.

Maryland State Highway Administration
Turning Movement Summary and
Level of Service

Count Date:
Conditions: Future SATURDAY
Design Year: 2022

Location: MD 355 @ Tuckerman Ln
Computed By: LL
Date: 3/27/14

Montgomery County Method

Morning Peak Hour 7:00-8:00 am

Lane Configuration

Evening Peak Hour 5:00-6:00 pm

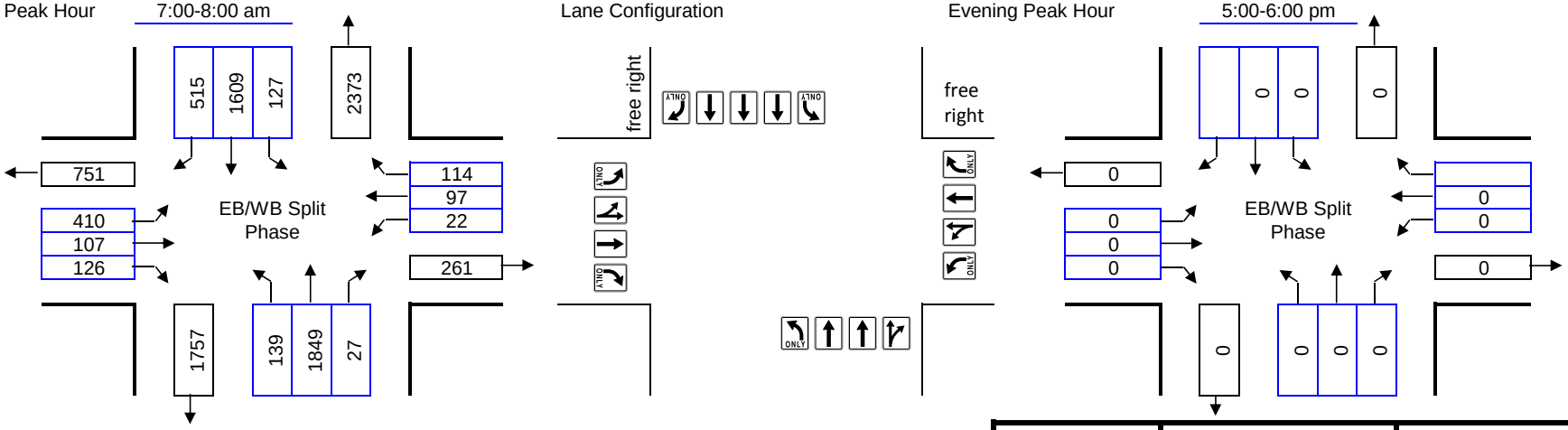

Right Turns Subtracted for Exclusive Right Turn Overlap Phasing or Right Turn on Red:

	AM	PM
NB Approach:	NB	NB
SB Approach:	SB	SB
EB Approach:	EB	EB
WB Approach:	WB 114	WB

Number of Lanes	Lane Use Factor		Opposing Volume (vph)		PCE
1 =	1.00	Congestion Standard	≤	199	1.1
2 =	0.53	= 1800	≤	599	2.0
3 =	0.37	for	≤	799	3.0
4 =	0.30	Grosvenor	≤	999	4.0
Dbl-left	0.60	Policy Area	≥	1000	5.0

Movement	Volume	PCE	Lane Use Factor	Lane Volume	Opposing Lefts	Critical Lane Volume	*
NBTR + SBL	1876	1.00	0.37	694	127	821	*
SBT + NBL	1609	1.00	0.37	595	139	734	
EBL	410	1.00	0.60	246	0	246	*
WBLT	97	1.00	0.53	51	0	51	*
					Critical Volume	1118	OK
					V/C	0.62	

De facto LT lane(s) assumed for EB approach. De facto through lane(s) assumed for WB approach.

Movement	Volume	PCE	Lane Use Factor	Lane Volume	Opposing Lefts	Critical Lane Volume	*
					Critical Volume	0	OK
					V/C	0.00	

Maryland State Highway Administration
Turning Movement Summary and
Level of Service

Count Date:
Conditions: Future
Design Year: 2022

Location: Montrose Rd. @ Montrose Pkwy
Computed By: BJM
Date: 3/27/14

Montgomery County Method

Morning Peak Hour 7:15-8:15 am

Lane Configuration

Evening Peak Hour 5:00-6:00 pm

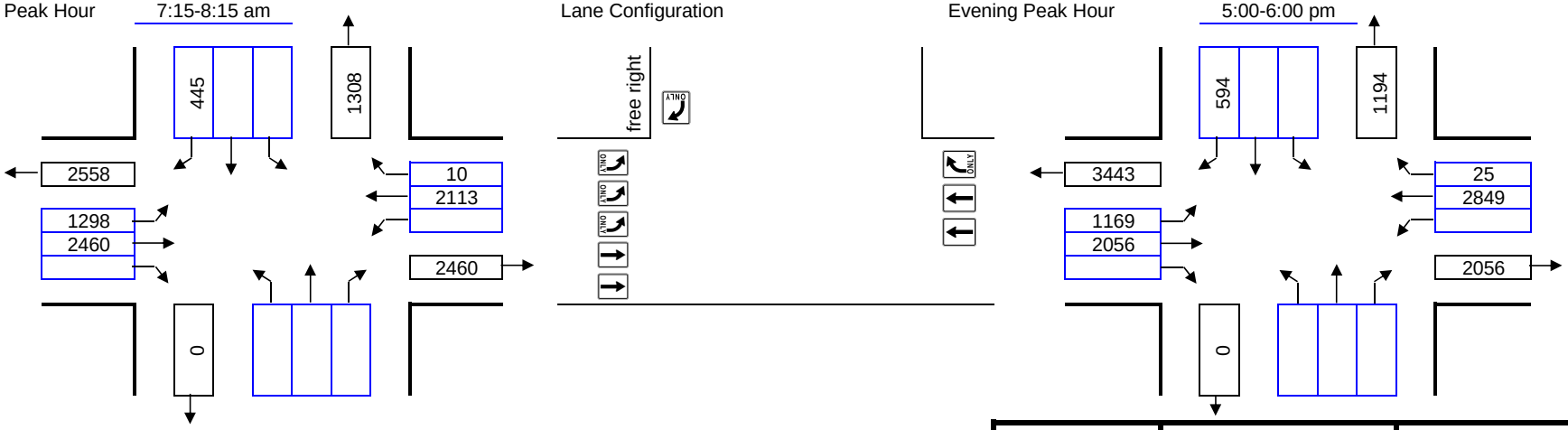

Right Turns Subtracted for Exclusive Right Turn Overlap Phasing or Right Turn on Red:

	AM		PM	
NB Approach:	NB		NB	
SB Approach:	SB	445	SB	594
EB Approach:	EB		EB	
WB Approach:	WB		WB	

Number of Lanes	Lane Use Factor		Opposing Volume (vph)		PCE
1 =	1.00	Congestion Standard	≤	199	1.1
2 =	0.53	= 1550	≤	599	2.0
3 =	0.37	for	≤	799	3.0
4 =	0.30	North Bethesda	≤	999	4.0
Dbl-left	0.60	Policy	≥	1000	5.0
		Area			

Movement	Volume	PCE	Lane Use Factor	Lane Volume	Opposing Lefts	Critical Lane Volume	*
SBR	0	1.00	1.00	0	0	0	
EBT	2460	1.00	0.53	1304	0	1304	
WBT + EBL	2113	1.00	0.53	1120	519	1639	*
					Critical Volume	1639	F
					V/C	1.06	

Movement	Volume	PCE	Lane Use Factor	Lane Volume	Opposing Lefts	Critical Lane Volume	*
SBR	0	1.00	1.00	0	0	0	
EBT	2056	1.00	0.53	1090	0	1090	
WBT + EBL	2849	1.00	0.53	1510	468	1978	*
					Critical Volume	1978	F
					V/C	1.28	

Maryland State Highway Administration
Turning Movement Summary and
Level of Service

Count Date:
Conditions: Future SATURDAY
Design Year: 2022

Location: Montrose Rd. @ Montrose Pkwy
Computed By: LL
Date: 3/27/14

Montgomery County Method

Morning Peak Hour 7:15-8:15 am

Lane Configuration

Evening Peak Hour 5:00-6:00 pm

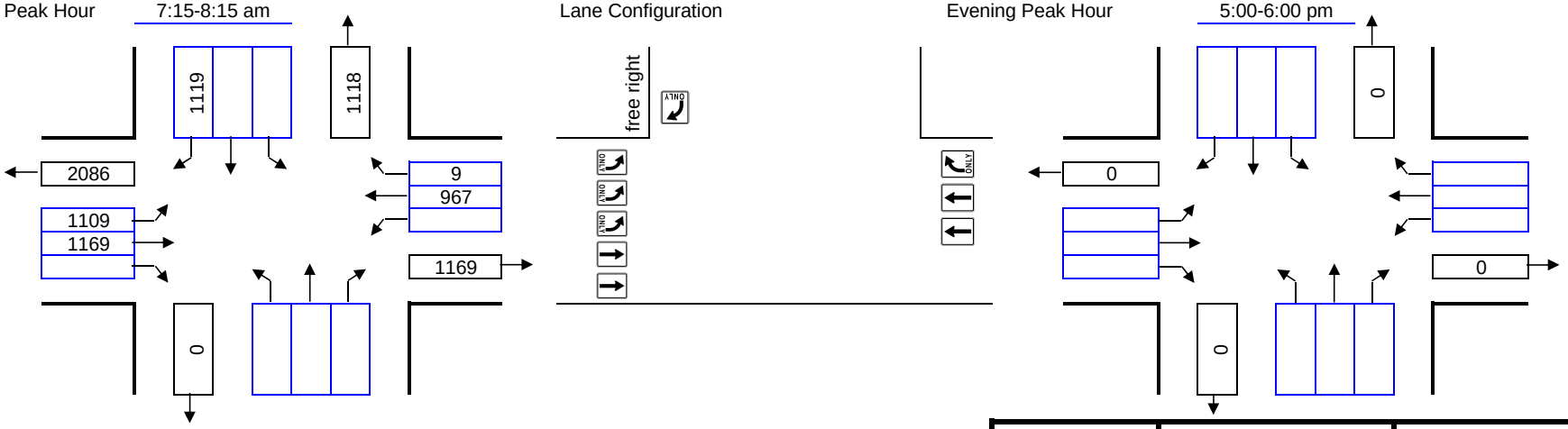

Right Turns Subtracted for Exclusive Right Turn Overlap Phasing or Right Turn on Red:

	AM		PM	
NB Approach:	NB		NB	
SB Approach:	SB	1119	SB	
EB Approach:	EB		EB	
WB Approach:	WB		WB	

Number of Lanes	Lane Use Factor		Opposing Volume (vph)		PCE
1 =	1.00	Congestion Standard	≤	199	1.1
2 =	0.53	= 1550	≤	599	2.0
3 =	0.37	for	≤	799	3.0
4 =	0.30	North Bethesda	≤	999	4.0
Dbl-left	0.60	Policy	≥	1000	5.0
		Area			

Movement	Volume	PCE	Lane Use Factor	Lane Volume	Opposing Lefts	Critical Lane Volume	*
SBR	0	1.00	1.00	0	0	0	
EBT	1169	1.00	0.53	620	0	620	
WBT + EBL	967	1.00	0.53	513	444	957	*
					Critical Volume	957	OK
					V/C	0.62	

Movement	Volume	PCE	Lane Use Factor	Lane Volume	Opposing Lefts	Critical Lane Volume	*
					Critical Volume	0	OK
					V/C	0.00	

Maryland State Highway Administration
Turning Movement Summary and
Level of Service

Count Date:
Conditions: Future
Design Year: 2022

Location: East Jefferson @ Montrose Road
Computed By: BJM
Date: 4/4/14

Montgomery County Method

Morning Peak Hour 7:15-8:15 am

Lane Configuration

Evening Peak Hour 5:00-6:00 pm

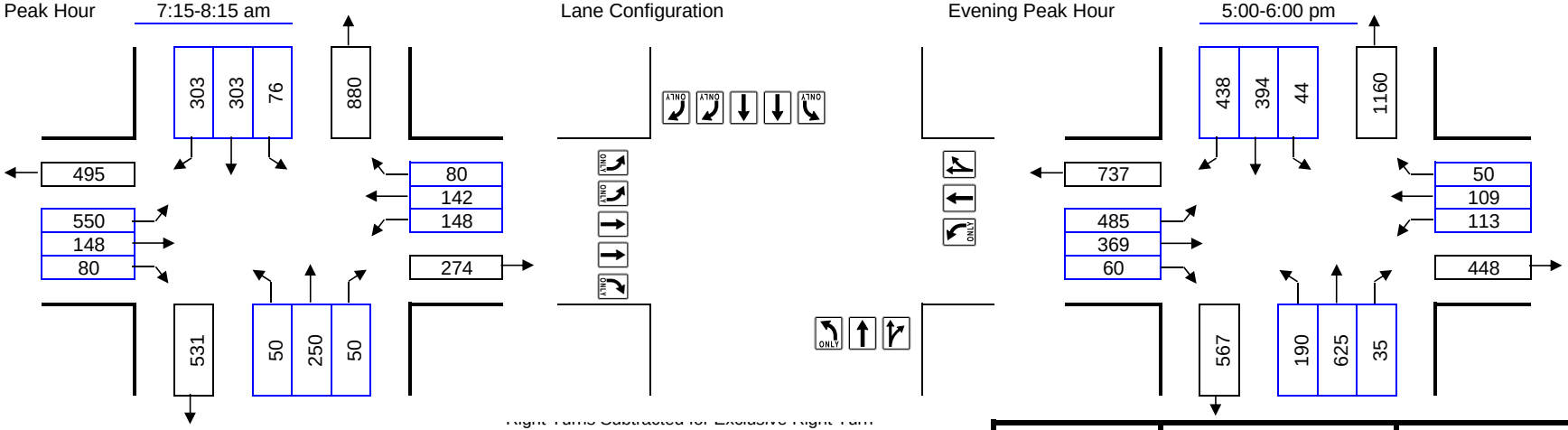

Right Turns Subtracted for Exclusive Right Turn Overlap Phasing or Right Turn on Red and Free Rights:

	AM	PM
NB Approach:	NB	NB
SB Approach:	SB	SB 291
EB Approach:	EB	EB
WB Approach:	WB	WB

Number of Lanes	Lane Use Factor		Opposing Volume (vph)		PCE
1 =	1.00	Congestion Standard	≤	199	1.1
2 =	0.53	= 1550	≤	599	2.0
3 =	0.37	for	≤	799	3.0
4 =	0.30	North Bethesda	≤	999	4.0
Dbl-left	0.60	Policy Area	≥	1000	5.0

Movement	Volume	PCE	Lane Use Factor	Lane Volume	Opposing Lefts	Critical Lane Volume	*
NBTR + SBL	300	1.00	0.53	159	76	235	*
SBT + NBL	303	1.00	0.53	161	50	211	
EBR + WBL	80	1.00	1.00	80	148	228	
WBTR + EBL	222	1.00	0.53	118	330	448	*
					Critical Volume	683	OK
					V/C	0.44	

Movement	Volume	PCE	Lane Use Factor	Lane Volume	Opposing Lefts	Critical Lane Volume	*
NBTR + SBL	660	1.00	0.53	350	44	394	
SBT + NBL	394	1.00	0.53	209	190	399	*
EBT + WBL	369	1.00	0.53	196	113	309	
WBTR + EBL	159	1.00	0.53	84	291	375	*
					Critical Volume	774	OK
					V/C	0.50	

Maryland State Highway Administration
Turning Movement Summary and
Level of Service

Count Date:
Conditions: Future SATURDAY
Design Year: 2022

Location: East Jefferson @ Montrose Road
Computed By: LL
Date: 4/4/14

Montgomery County Method

Morning Peak Hour 7:15-8:15 am

Lane Configuration

Evening Peak Hour 5:00-6:00 pm

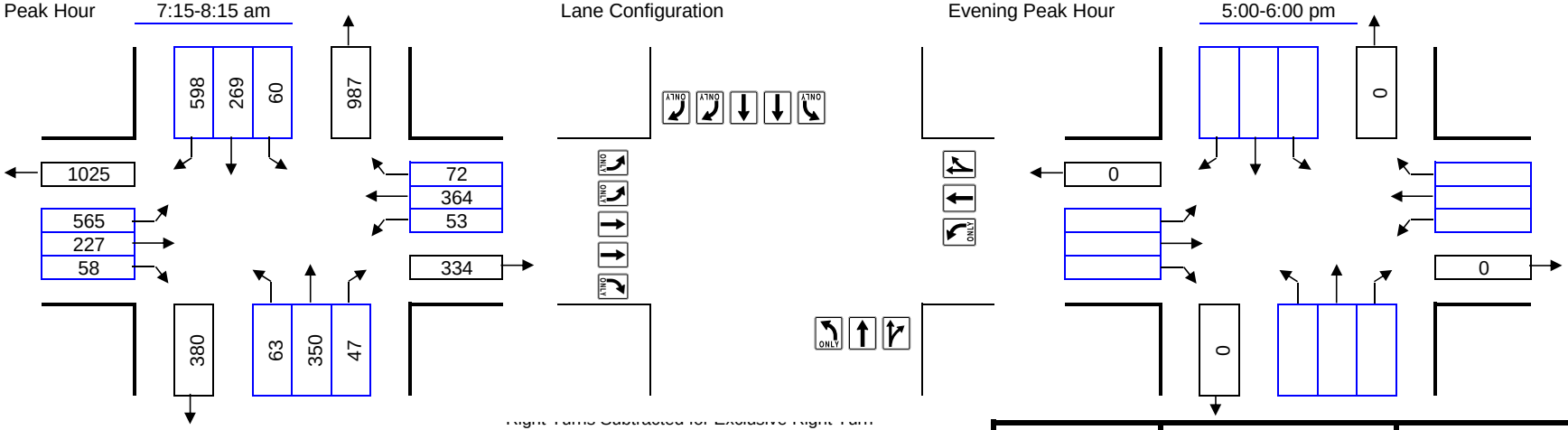

Right Turns Subtracted for Exclusive Right Turn Overlap Phasing or Right Turn on Red and Free Rights:

	AM		PM	
NB Approach:	NB		NB	
SB Approach:	SB	339	SB	
EB Approach:	EB		EB	
WB Approach:	WB		WB	

Number of Lanes	Lane Use Factor		Opposing Volume (vph)		PCE
1 =	1.00	Congestion Standard	≤	199	1.1
2 =	0.53	= 1550	≤	599	2.0
3 =	0.37	for	≤	799	3.0
4 =	0.30	North Bethesda	≤	999	4.0
Dbl-left	0.60	Policy	≥	1000	5.0
		Area			

Movement	Volume	PCE	Lane Use Factor	Lane Volume	Opposing Lefts	Critical Lane Volume	*
NBTR + SBL	397	1.00	0.53	210	60	270	*
SBT + NBL	269	1.00	0.53	143	63	206	
EBT + WBL	227	1.00	0.53	120	53	173	
WBTR + EBL	436	1.00	0.53	231	339	570	*
					Critical Volume	840	OK
					V/C	0.54	

Movement	Volume	PCE	Lane Use Factor	Lane Volume	Opposing Lefts	Critical Lane Volume	*
					Critical Volume	0	OK
					V/C	0.00	

Maryland State Highway Administration
Turning Movement Summary and
Level of Service

Count Date:
Conditions: Future
Design Year: 2022

Location: Hoya Street @ Montrose Road
Computed By: LL
Date: 4/4/14

Montgomery County Method

Morning Peak Hour 7:15-8:15 am

Lane Configuration

Evening Peak Hour 5:00-6:00 pm

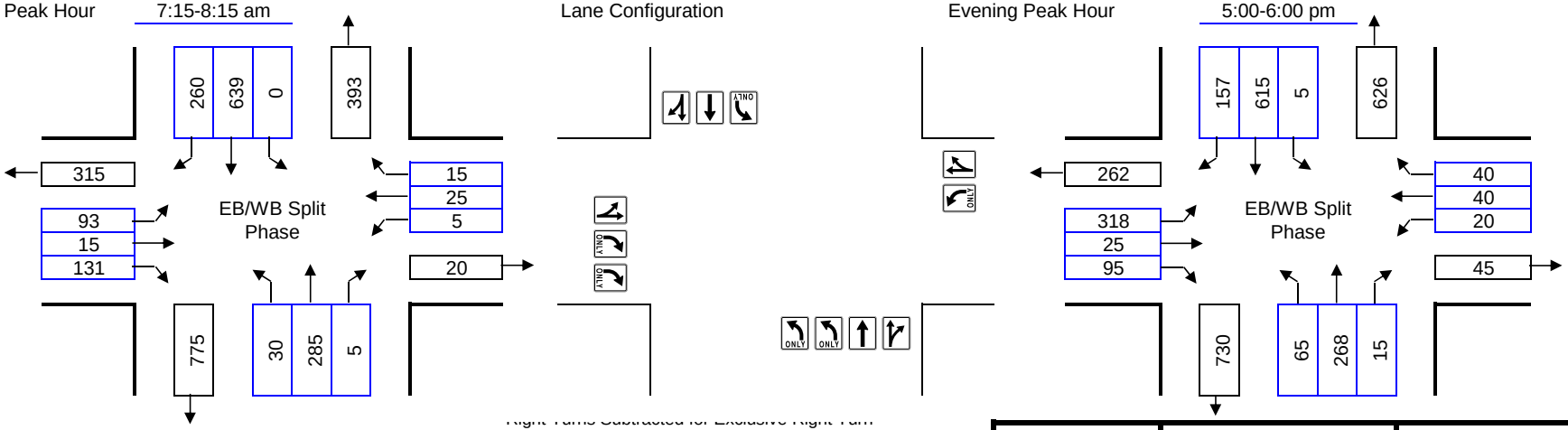

Right Turns Subtracted for Exclusive Right Turn Overlap Phasing or Right Turn on Red and Free Rights:

	AM	PM
NB Approach:	NB	NB
SB Approach:	SB	SB
EB Approach:	EB	EB
WB Approach:	WB	WB

Number of Lanes	Lane Use Factor		Opposing Volume (vph)		PCE
1 =	1.00	Congestion Standard	≤	199	1.1
2 =	0.53	= 1800	≤	599	2.0
3 =	0.37	for	≤	799	3.0
4 =	0.30	White Flint	≤	999	4.0
Dbl-left	0.60	Policy Area	≥	1000	5.0

Movement	Volume	PCE	Lane Use Factor	Lane Volume	Opposing Lefts	Critical Lane Volume	*
NBTR	290	1.00	0.53	154	0	154	
SBTR + NBL	899	1.00	0.53	476	18	494	*
EBLT	108	1.00	1.00	108	0	108	*
WBTR	40	1.00	1.00	40	0	40	*
					Critical Volume	642	OK
					V/C	0.36	

Movement	Volume	PCE	Lane Use Factor	Lane Volume	Opposing Lefts	Critical Lane Volume	*
NBTR + SBL	283	1.00	0.53	150	5	155	
SBTR + NBL	772	1.00	0.53	409	39	448	*
EBLT	343	1.00	1.00	343	0	343	*
WBTR	80	1.00	1.00	80	0	80	*
					Critical Volume	871	OK
					V/C	0.48	

Maryland State Highway Administration
Turning Movement Summary and
Level of Service

Count Date:
Conditions: Future SATURDAY
Design Year: 2022

Location: Hoya Street @ Montrose Road
Computed By: LL
Date: 4/4/14

Montgomery County Method

Morning Peak Hour 7:15-8:15 am

Lane Configuration

Evening Peak Hour 5:00-6:00 pm

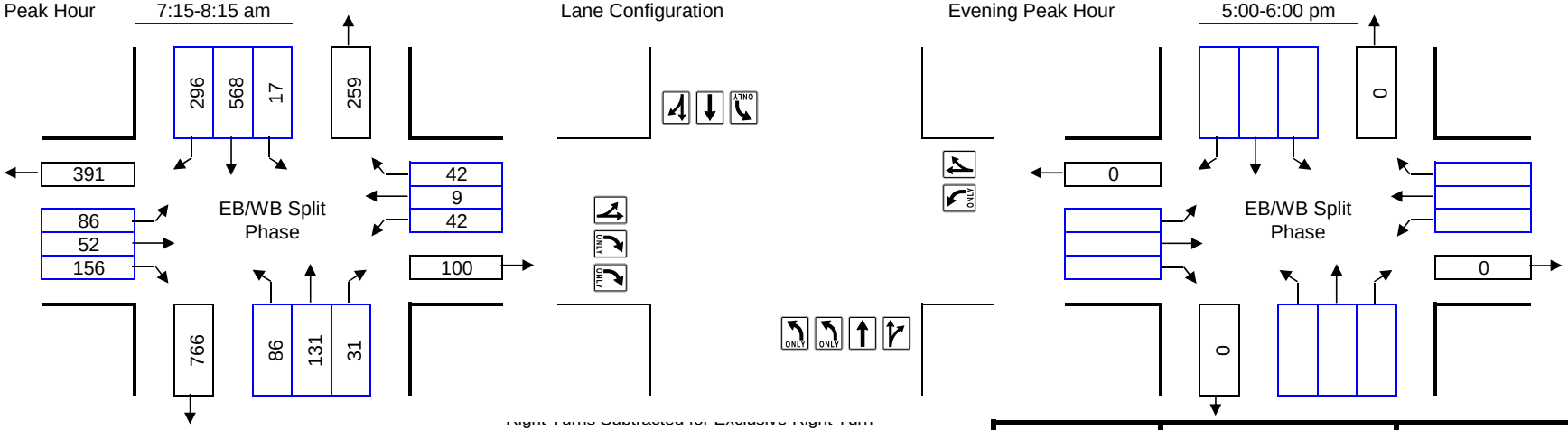

Right Turns Subtracted for Exclusive Right Turn Overlap Phasing or Right Turn on Red and Free Rights:

	AM		PM
NB Approach:	NB		NB
SB Approach:	SB		SB
EB Approach:	EB		EB
WB Approach:	WB		WB

Number of Lanes	Lane Use Factor		Opposing Volume (vph)		PCE
1 =	1.00	Congestion Standard	≤	199	1.1
2 =	0.53	= 1800	≤	599	2.0
3 =	0.37	for	≤	799	3.0
4 =	0.30	White Flint	≤	999	4.0
Dbl-left	0.60	Policy Area	≥	1000	5.0

Movement	Volume	PCE	Lane Use Factor	Lane Volume	Opposing Lefts	Critical Lane Volume	*
NBTR + SBL	162	1.00	0.53	86	17	103	
SBTR + NBL	864	1.00	0.53	458	52	510	*
EBLT	138	1.00	1.00	138	0	138	*
WBTR	51	1.00	1.00	51	0	51	*
					Critical Volume	699	OK
					V/C	0.39	

Movement	Volume	PCE	Lane Use Factor	Lane Volume	Opposing Lefts	Critical Lane Volume	*
					Critical Volume	0	OK
					V/C	0.00	

Maryland State Highway Administration
Turning Movement Summary and
Level of Service

Count Date:
Conditions: Future
Design Year: 2022

Location: Montrose Pkwy. @ E. Jefferson St.

Computed By: BJM Date: 3/27/14

Montgomery County Method

Morning Peak Hour 7:15-8:15 am

Lane Configuration

Evening Peak Hour 5:00-6:00 pm

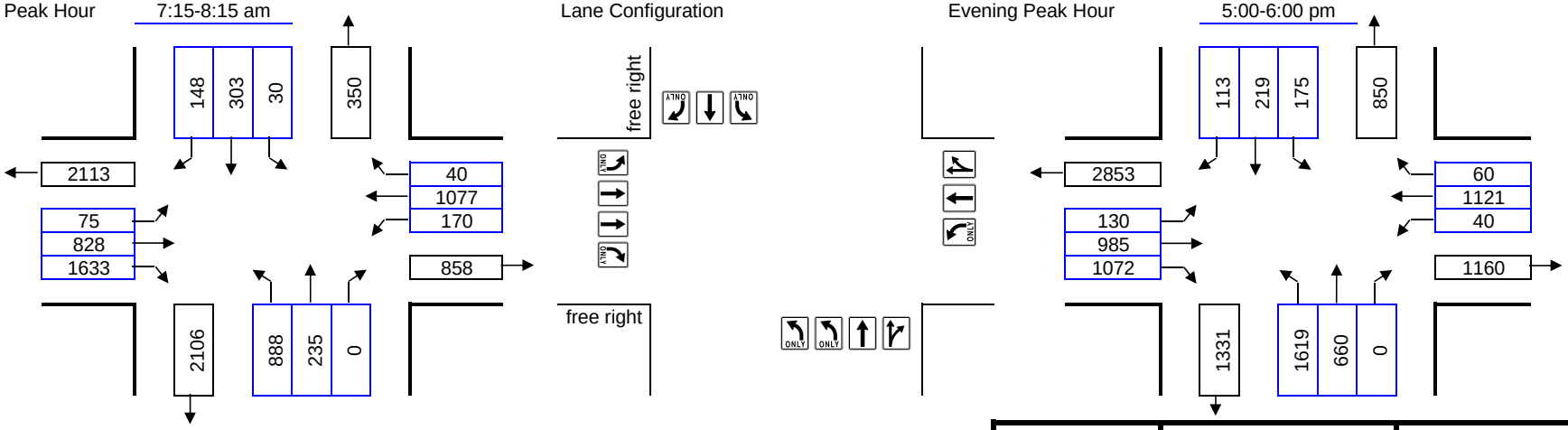

Right Turns Subtracted for Exclusive Right Turn Overlap Phasing or Right Turn on Red:

	AM		PM	
NB Approach:	NB		NB	
SB Approach:	SB		SB	
EB Approach:	EB	1633	EB	1072
WB Approach:	WB		WB	

Number of Lanes	Lane Use Factor		Opposing Volume (vph)		PCE
1 =	1.00	Congestion Standard	≤	199	1.1
2 =	0.53	= 1550	≤	599	2.0
3 =	0.37	for	≤	799	3.0
4 =	0.30	North Bethesda	≤	999	4.0
Dbl-left	0.60	Policy	≥	1000	5.0
		Area			

Movement	Volume	PCE	Lane Use Factor	Lane Volume	Opposing Lefts	Critical Lane Volume	*
NBT + SBL	235	1.00	0.53	125	30	155	
SBT + NBL	303	1.00	1.00	303	533	836	*
EBT + WBL	828	1.00	0.53	439	170	609	
WBTR + EBL	1117	1.00	0.53	592	75	667	*
					Critical Volume	1503	OK
					V/C	0.97	

Movement	Volume	PCE	Lane Use Factor	Lane Volume	Opposing Lefts	Critical Lane Volume	*
NBT + SBL	660	1.00	0.53	350	175	525	
SBT + NBL	219	1.00	1.00	219	971	1190	*
EBT + WBL	985	1.00	0.53	522	40	562	
WBTR + EBL	1181	1.00	0.53	626	130	756	*
					Critical Volume	1946	F
					V/C	1.26	

Maryland State Highway Administration
Turning Movement Summary and
Level of Service

Count Date:
Conditions: Future SATURDAY
Design Year: 2022

Location: Montrose Pkwy. @ E. Jefferson St.
Computed By: LL
Date: 3/27/14

Montgomery County Method

Morning Peak Hour 7:15-8:15 am

Lane Configuration

Evening Peak Hour 5:00-6:00 pm

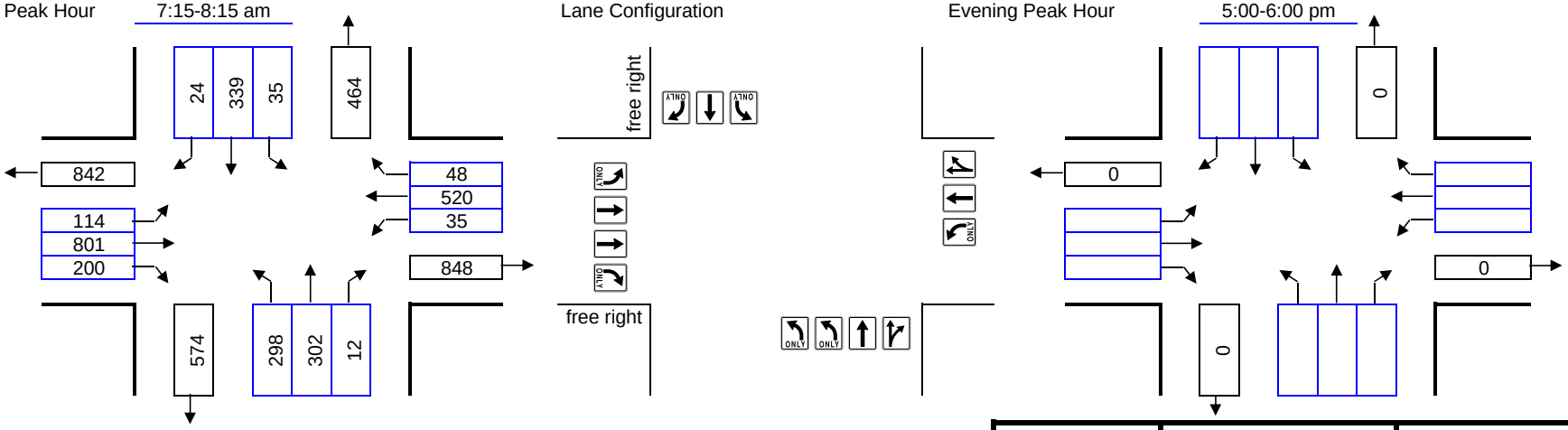

Right Turns Subtracted for Exclusive Right Turn Overlap Phasing or Right Turn on Red:

	AM	PM
NB Approach:	NB	NB
SB Approach:	SB	SB
EB Approach:	EB	EB
WB Approach:	WB	WB

Number of Lanes	Lane Use Factor		Opposing Volume (vph)		PCE
1 =	1.00	Congestion Standard	≤	199	1.1
2 =	0.53	= 1550	≤	599	2.0
3 =	0.37	for	≤	799	3.0
4 =	0.30	North Bethesda	≤	999	4.0
Dbl-left	0.60	Policy	≥	1000	5.0
		Area			

Movement	Volume	PCE	Lane Use Factor	Lane Volume	Opposing Lefts	Critical Lane Volume	*
NBTR + SBL	314	1.00	0.53	166	35	201	
SBT + NBL	339	1.00	1.00	339	179	518	*
EBT + WBL	801	1.00	0.53	425	35	460	*
WBTR + EBL	568	1.00	0.53	301	114	415	
					Critical Volume	978	OK
					V/C	0.63	

Movement	Volume	PCE	Lane Use Factor	Lane Volume	Opposing Lefts	Critical Lane Volume	*
					Critical Volume	0	OK
					V/C	0.00	

Maryland State Highway Administration
Turning Movement Summary and
Level of Service

Count Date:
Conditions: Future
Design Year: 2022

Location: Hoya Street @ Montrose Pkwy
Computed By: BJM
Date: 3/27/14

Montgomery County Method

Morning Peak Hour 7:00-8:00 am

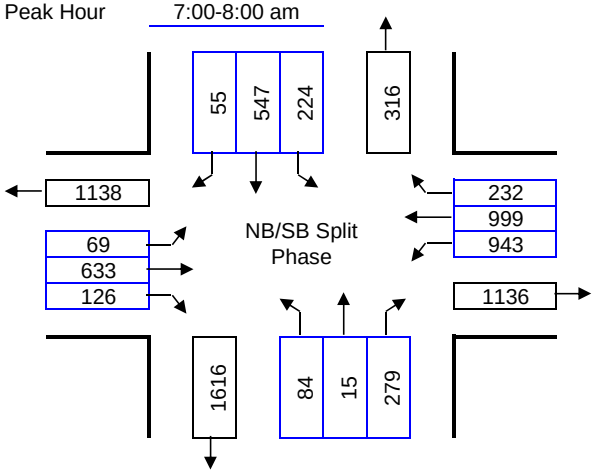

Lane Configuration

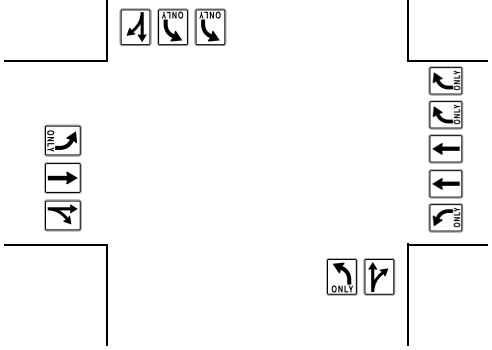

Evening Peak Hour 5:00-6:00 pm

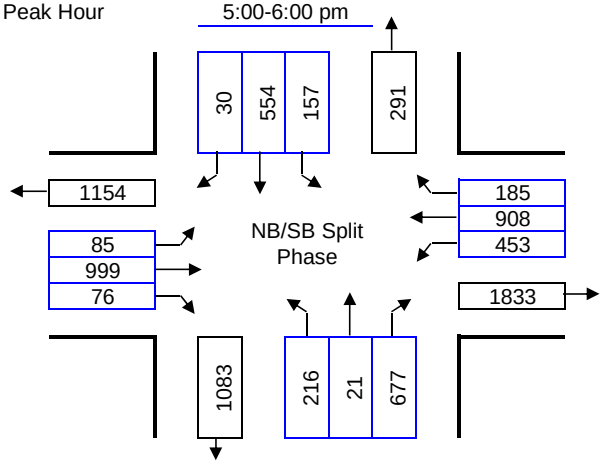

Right Turns Subtracted for Exclusive Right Turn Overlap Phasing or Right Turn on Red:

	AM	PM
NB Approach:	NB	NB
SB Approach:	SB	SB
EB Approach:	EB	EB
WB Approach:	WB	WB

Number of Lanes	Lane Use Factor		Opposing Volume (vph)		PCE
1 =	1.00	Congestion Standard	≤	199	1.1
2 =	0.53	= 1800	≤	599	2.0
3 =	0.37	for	≤	799	3.0
4 =	0.30	White Flint	≤	999	4.0
Dbl-left	0.60	Policy Area	≥	1000	5.0

Movement	Volume	PCE	Lane Use Factor	Lane Volume	Opposing Lefts	Critical Lane Volume	*
NBTR	294	1.00	1.00	294	0	294	*
SBTR	602	1.00	1.00	602	0	602	*
EBTR + WBL	759	1.00	0.53	402	943	1345	*
WBT + EBL	999	1.00	0.53	529	69	598	
					Critical Volume	2241	F
					V/C	1.25	

Movement	Volume	PCE	Lane Use Factor	Lane Volume	Opposing Lefts	Critical Lane Volume	*
NBTR	698	1.00	1.00	698	0	698	*
SBTR	584	1.00	1.00	584	0	584	*
EBTR + WBL	1075	1.00	0.53	570	453	1023	*
WBT + EBL	908	1.00	0.53	481	85	566	
					Critical Volume	2305	F
					V/C	1.28	

Maryland State Highway Administration
Turning Movement Summary and
Level of Service

Count Date:
Conditions: Future SATURDAY
Design Year: 2022

Location: Hoya Street @ Montrose Pkwy
Computed By: LL
Date: 3/27/14

Montgomery County Method

Morning Peak Hour 7:00-8:00 am

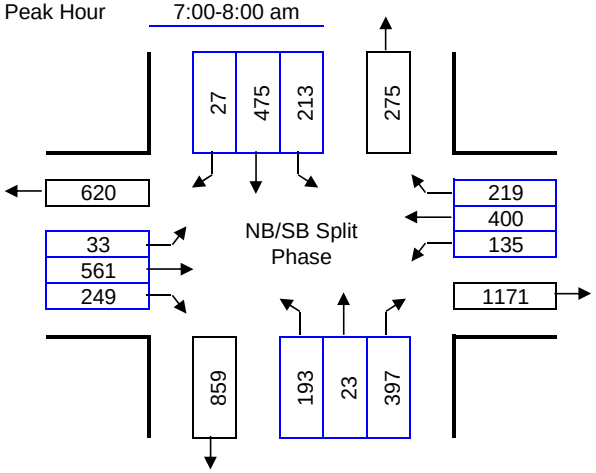

Lane Configuration

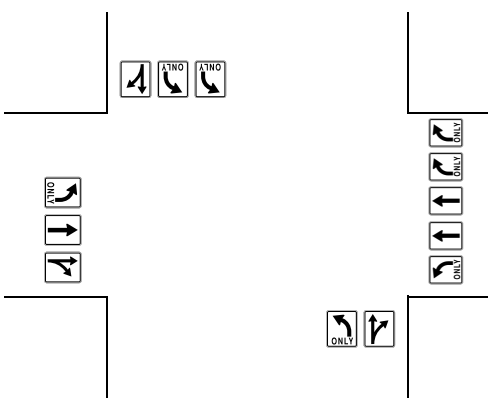

Evening Peak Hour 5:00-6:00 pm

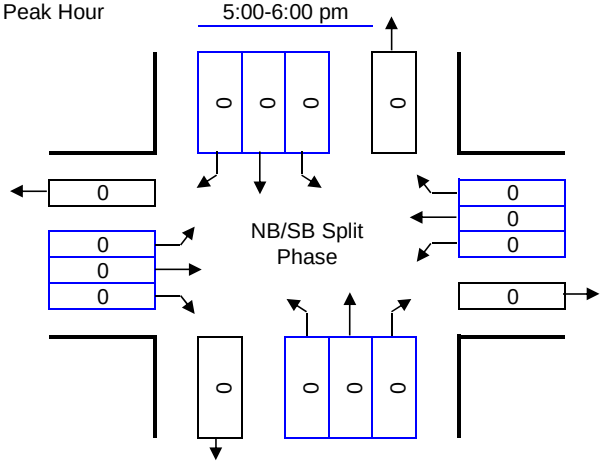

Right Turns Subtracted for Exclusive Right Turn Overlap Phasing or Right Turn on Red:

	AM	PM
NB Approach:	NB	NB
SB Approach:	SB	SB
EB Approach:	EB	EB
WB Approach:	WB	WB

Number of Lanes	Lane Use Factor		Opposing Volume (vph)		PCE
1 =	1.00	Congestion Standard	≤	199	1.1
2 =	0.53	= 1800	≤	599	2.0
3 =	0.37	for	≤	799	3.0
4 =	0.30	White Flint	≤	999	4.0
Dbl-left	0.60	Policy	≥	1000	5.0
		Area			

Movement	Volume	PCE	Lane Use Factor	Lane Volume	Opposing Lefts	Critical Lane Volume	*
NBTR	420	1.00	1.00	420	0	420	*
SBTR	502	1.00	1.00	502	0	502	*
EBTR + WBL	810	1.00	0.53	429	135	564	*
WBT + EBL	400	1.00	0.53	212	33	245	
					Critical Volume	1486	OK
						V/C	0.83

Movement	Volume	PCE	Lane Use Factor	Lane Volume	Opposing Lefts	Critical Lane Volume	*
					Critical Volume	0	OK
						V/C	0.00

Maryland State Highway Administration
Turning Movement Summary and
Level of Service

Count Date:
Conditions: Future
Design Year: 2022

Location: Randolph Road @ Chapman Avenue/Maple Ave
Computed By: BJM
Date: 4/4/14

Montgomery County Method

Morning Peak Hour 7:15-8:15 am

Lane Configuration

Evening Peak Hour 5:00-6:00 pm

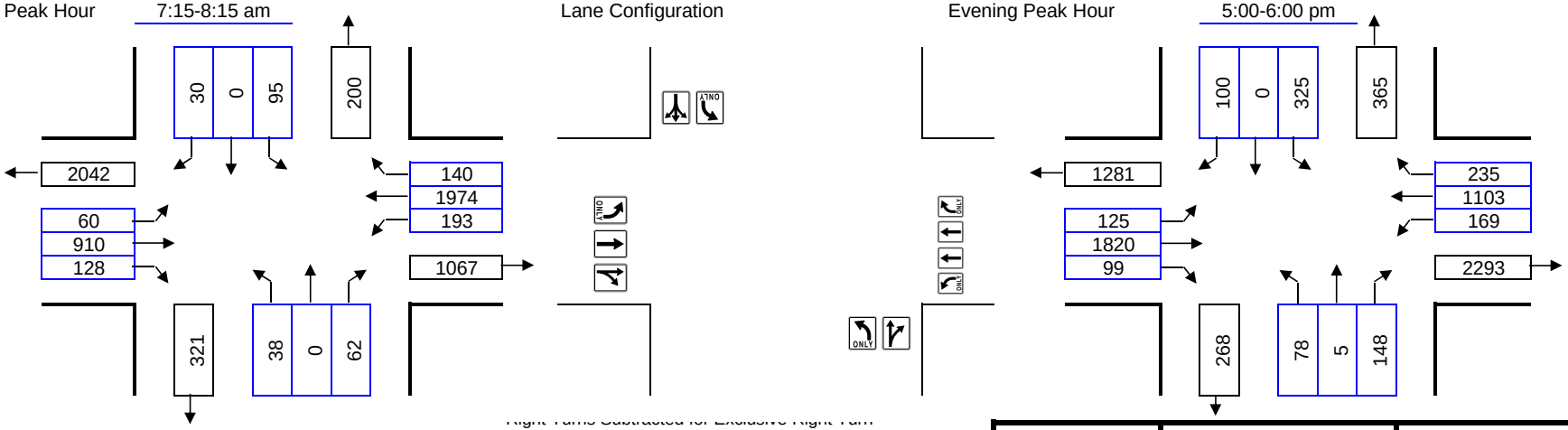

Right Turns Subtracted for Exclusive Right Turn Overlap Phasing or Right Turn on Red and Free Rights:

	AM	PM
NB Approach:	NB	NB
SB Approach:	SB	SB
EB Approach:	EB	EB
WB Approach:	WB	WB

Number of Lanes	Lane Use Factor		Opposing Volume (vph)		PCE
1 =	1.00	Congestion Standard	≤	199	1.1
2 =	0.53	= 1800	≤	599	2.0
3 =	0.37	for	≤	799	3.0
4 =	0.30	White Flint	≤	999	4.0
Dbl-left	0.60	Policy Area	≥	1000	5.0

Movement	Volume	PCE	Lane Use Factor	Lane Volume	Opposing Lefts	Critical Lane Volume	*
NBTR + SBL	62	1.00	1.00	62	57	119	*
SBLTR + NBL	125	1.00	0.60	75	38	113	
EBTR + WBL	1038	1.00	0.53	550	193	743	
WBT + EBL	1974	1.00	0.53	1046	60	1106	*
					Critical Volume	1225	OK
					V/C	0.68	

Movement	Volume	PCE	Lane Use Factor	Lane Volume	Opposing Lefts	Critical Lane Volume	*
NBTR + SBL	153	1.00	1.00	153	195	348	*
SBLTR + NBL	425	1.00	0.60	255	78	333	
EBTR + WBL	1919	1.00	0.53	1017	169	1186	*
WBT + EBL	1103	1.00	0.53	585	125	710	
					Critical Volume	1534	OK
					V/C	0.85	

Maryland State Highway Administration
Turning Movement Summary and
Level of Service

Count Date:
Conditions: Future SATURDAY
Design Year: 2022

Location: Randolph Road @ Chapman Avenue/Maple Ave
Computed By: LL
Date: 4/4/14

Montgomery County Method

Morning Peak Hour 7:15-8:15 am

Lane Configuration

Evening Peak Hour 5:00-6:00 pm

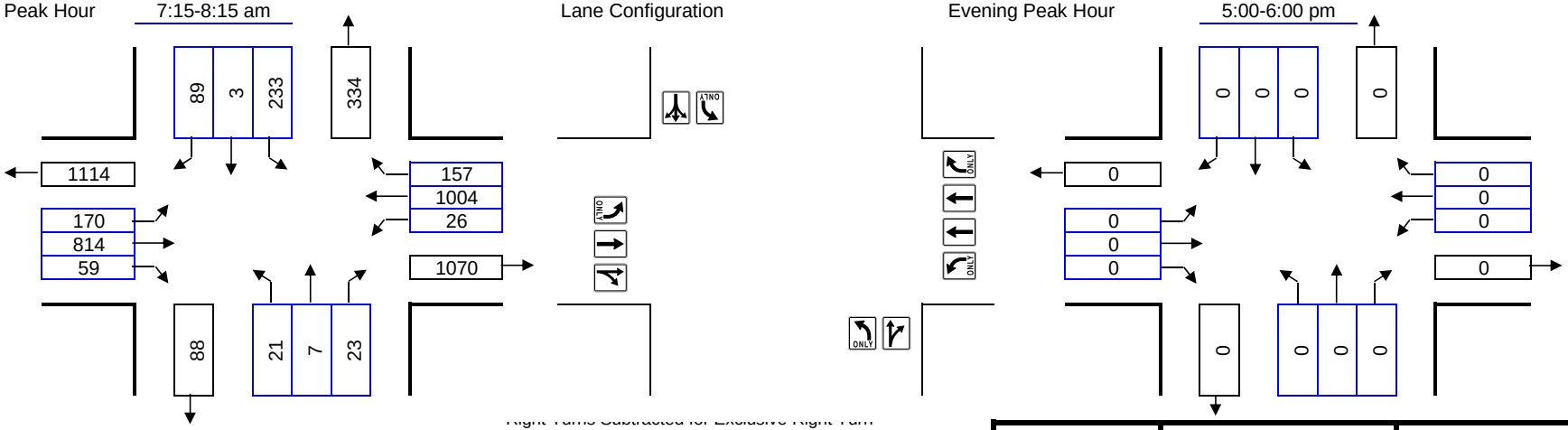

Right Turns Subtracted for Exclusive Right Turn Overlap Phasing or Right Turn on Red and Free Rights:

	AM	PM
NB Approach:	NB	NB
SB Approach:	SB	SB
EB Approach:	EB	EB
WB Approach:	WB	WB

Number of Lanes	Lane Use Factor		Opposing Volume (vph)		PCE
1 =	1.00	Congestion Standard	≤	199	1.1
2 =	0.53	= 1800	≤	599	2.0
3 =	0.37	for	≤	799	3.0
4 =	0.30	White Flint	≤	999	4.0
Dbl-left	0.60	Policy Area	≥	1000	5.0

Movement	Volume	PCE	Lane Use Factor	Lane Volume	Opposing Lefts	Critical Lane Volume	*
NBTR + SBL	30	1.00	1.00	30	140	170	
SBLTR + NBL	325	1.00	0.60	195	21	216	*
EBTR + WBL	873	1.00	0.53	463	26	489	
WBT + EBL	1004	1.00	0.53	532	170	702	*
					Critical Volume	918	OK
					V/C	0.51	

Movement	Volume	PCE	Lane Use Factor	Lane Volume	Opposing Lefts	Critical Lane Volume	*
					Critical Volume	0	OK
					V/C	0.00	

Maryland State Highway Administration
Turning Movement Summary and
Level of Service

Count Date:
Conditions: Future
Design Year: 2022

Location: Randolph Road @ Nebel

Computed By: BJM Date: 4/4/14

Montgomery County Method

Morning Peak Hour 7:15-8:15 am

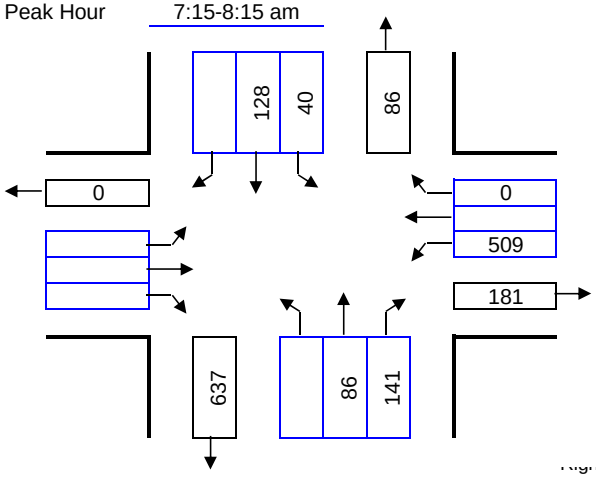

Lane Configuration

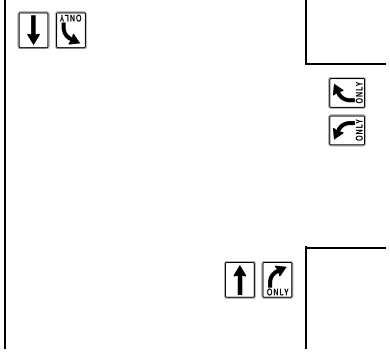

Evening Peak Hour 5:00-6:00 pm

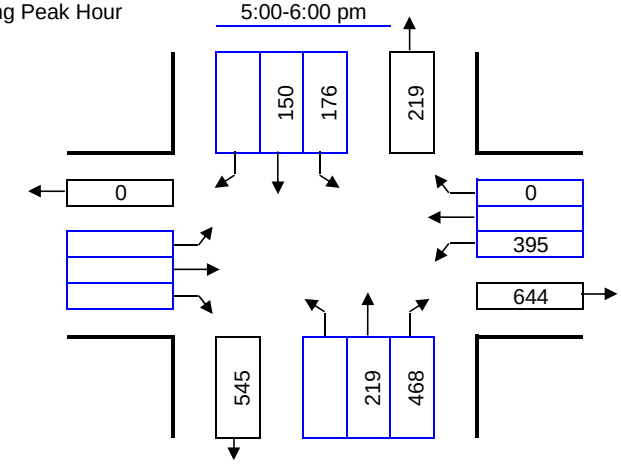

Right Turns Subtracted for Exclusive Right Turn Overlap Phasing or Right Turn on Red and Free Rights:

	AM		PM	
NB Approach:	NB	141	NB	395
SB Approach:	SB		SB	
EB Approach:	EB		EB	
WB Approach:	WB		WB	

Number of Lanes	Lane Use Factor		Opposing Volume (vph)		PCE
1 =	1.00	Congestion Standard	≤	199	1.1
2 =	0.53	= 1800	≤	599	2.0
3 =	0.37	for	≤	799	3.0
4 =	0.30	White Flint	≤	999	4.0
Dbl-left	0.60	Policy	≥	1000	5.0
		Area			

Movement	Volume	PCE	Lane Use Factor	Lane Volume	Opposing Lefts	Critical Lane Volume	*
NBT + SBL	86	1.00	1.00	86	40	126	
SBT	128	1.00	1.00	128	0	128	*
WBL	509	1.00	1.00	509	0	509	*
					Critical Volume	637	OK
						V/C	0.35

Movement	Volume	PCE	Lane Use Factor	Lane Volume	Opposing Lefts	Critical Lane Volume	*
NBT + SBL	219	1.00	1.00	219	176	395	*
SBT	150	1.00	1.00	150	0	150	
WBL	395	1.00	1.00	395	0	395	*
					Critical Volume	790	OK
						V/C	0.44

Maryland State Highway Administration
Turning Movement Summary and
Level of Service

Count Date:
Conditions: Future SATURDAY
Design Year: 2022

Location: Randolph Road @ Nebel
Computed By: LL
Date: 4/4/14

Montgomery County Method

Morning Peak Hour 7:15-8:15 am

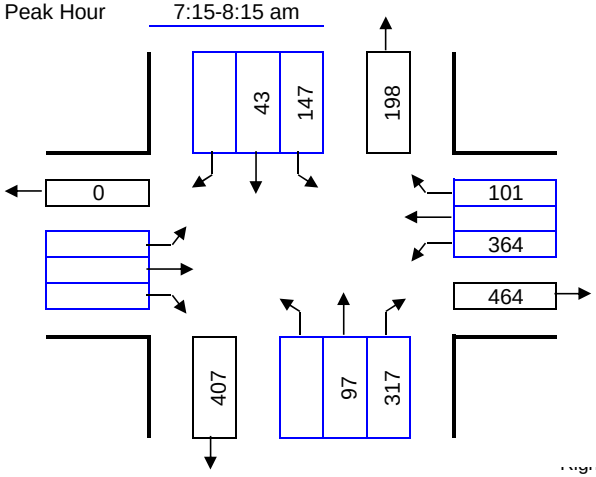

Lane Configuration

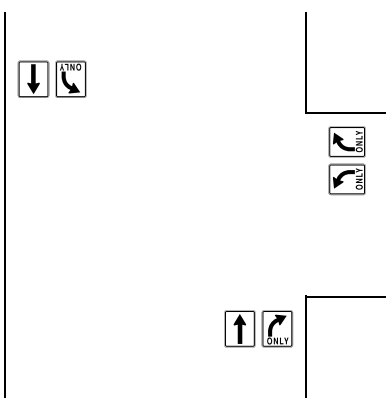

Evening Peak Hour 5:00-6:00 pm

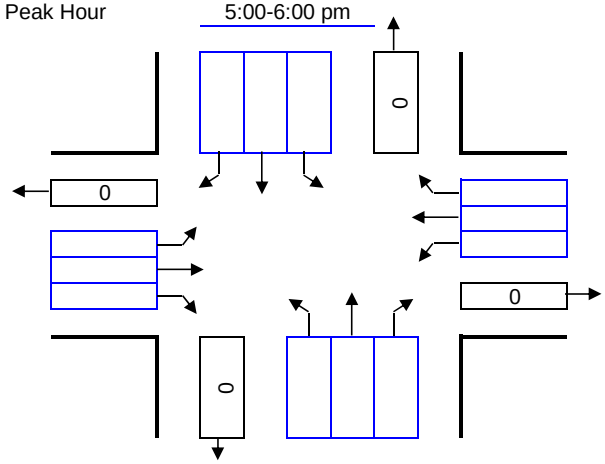

Right Turns Subtracted for Exclusive Right Turn Overlap Phasing or Right Turn on Red and Free Rights:

	AM		PM	
NB Approach:	NB	317	NB	
SB Approach:	SB		SB	
EB Approach:	EB		EB	
WB Approach:	WB		WB	

Number of Lanes	Lane Use Factor		Opposing Volume (vph)		PCE
1 =	1.00	Congestion Standard	≤	199	1.1
2 =	0.53	= 1800	≤	599	2.0
3 =	0.37	for	≤	799	3.0
4 =	0.30	White Flint	≤	999	4.0
Dbl-left	0.60	Policy	≥	1000	5.0
		Area			

Movement	Volume	PCE	Lane Use Factor	Lane Volume	Opposing Lefts	Critical Lane Volume	*
NBT + SBL	97	1.00	1.00	97	147	244	*
SBT	43	1.00	1.00	43	0	43	
WBL	364	1.00	1.00	364	0	364	*
					Critical Volume	608	OK
						V/C	0.34

Movement	Volume	PCE	Lane Use Factor	Lane Volume	Opposing Lefts	Critical Lane Volume	*
					Critical Volume	0	OK
						V/C	0.00

Maryland State Highway Administration
Turning Movement Summary and
Level of Service

Count Date:
Conditions: Future
Design Year: 2022

Location: Randolph Rd. @ Parklawn Dr.
Computed By: BJM
Date: 3/3/14

Montgomery County Method

Morning Peak Hour 7:15-8:15 am

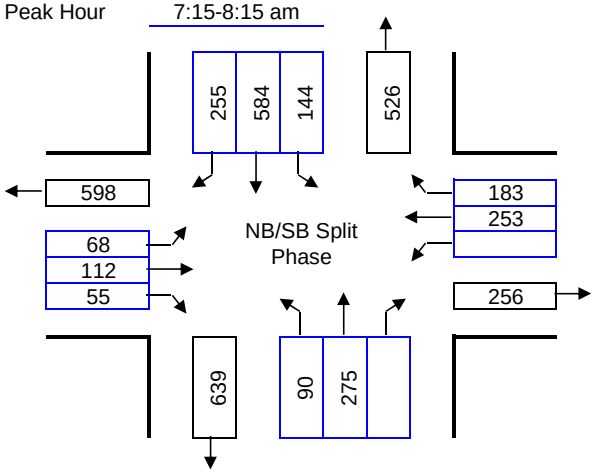

Lane Configuration

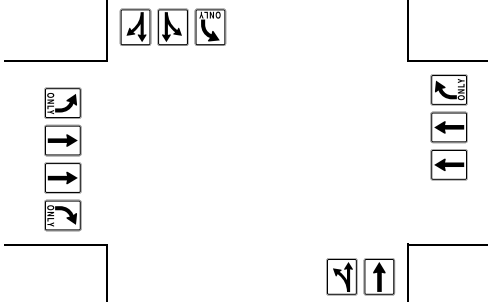

Evening Peak Hour 5:00-6:00 pm

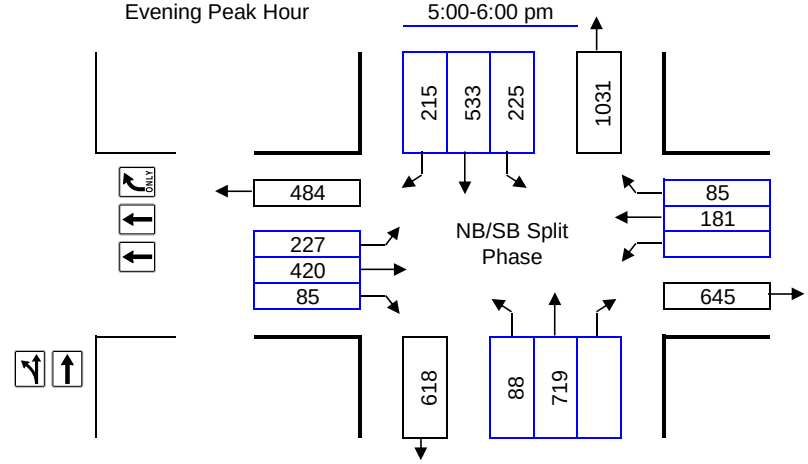

Right Turns Subtracted for Exclusive Right Turn Overlap Phasing or Right Turn on Red:

	AM		PM	
NB Approach:	NB		NB	
SB Approach:	SB		SB	
EB Approach:	EB		EB	
WB Approach:	WB	183	WB	

Number of Lanes	Lane Use Factor		Opposing Volume (vph)		PCE
1 =	1.00	Congestion Standard	≤	199	1.1
2 =	0.53	= 1550	≤	599	2.0
3 =	0.37	for	≤	799	3.0
4 =	0.30	North Bethesda	≤	999	4.0
Dbl-left	0.60	Policy	≥	1000	5.0
		Area			

Movement	Volume	PCE	Lane Use Factor	Lane Volume	Opposing Lefts	Critical Lane Volume	*
NBLT	365	1.00	0.53	193	0	193	*
SBLTR	839	1.00	0.53	445	0	445	*
EBT	112	1.00	0.53	59	0	59	
WBT + EBL	253	1.00	0.53	134	68	202	*
					Critical Volume	840	OK
					V/C	0.54	

De facto through lane(s) assumed for SB approach.

Movement	Volume	PCE	Lane Use Factor	Lane Volume	Opposing Lefts	Critical Lane Volume	*
NBLT	807	1.00	0.53	428	0	428	*
SBLTR	748	1.00	0.53	396	0	396	*
EBT	420	1.00	0.53	223	0	223	
WBT + EBL	181	1.00	0.53	96	227	323	*
					Critical Volume	1147	OK
					V/C	0.74	

De facto through lane(s) assumed for SB approach.

Maryland State Highway Administration
Turning Movement Summary and
Level of Service

Count Date:
Conditions: Future SATURDAY
Design Year: 2022

Location: Randolph Rd. @ Parklawn Dr.
Computed By: LL
Date: 3/3/14

Montgomery County Method

Morning Peak Hour 7:15-8:15 am

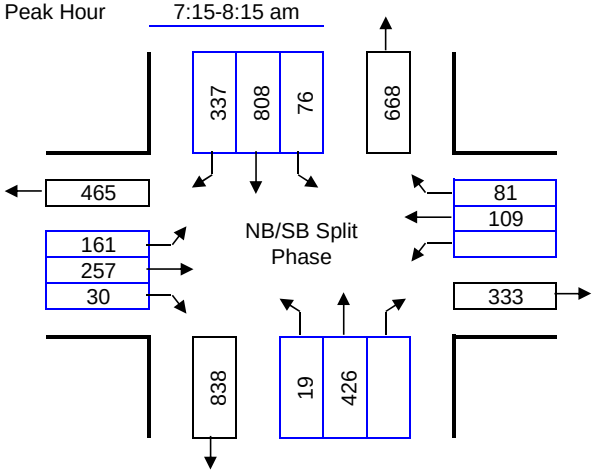

Lane Configuration

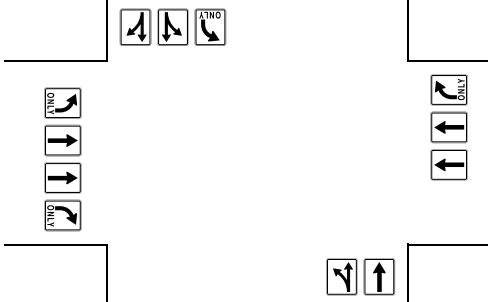

Evening Peak Hour 5:00-6:00 pm

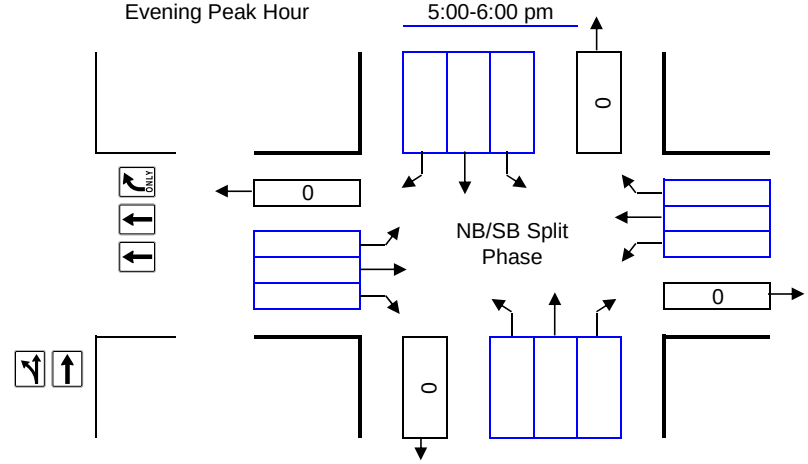

Right Turns Subtracted for Exclusive Right Turn Overlap Phasing or Right Turn on Red:

	AM	PM
NB Approach:	NB	NB
SB Approach:	SB	SB
EB Approach:	EB	EB
WB Approach:	WB 81	WB

Number of Lanes	Lane Use Factor		Opposing Volume (vph)		PCE
1 =	1.00	Congestion Standard	≤	199	1.1
2 =	0.53	= 1550	≤	599	2.0
3 =	0.37	for	≤	799	3.0
4 =	0.30	North Bethesda	≤	999	4.0
Dbl-left	0.60	Policy	≥	1000	5.0
		Area			

Movement	Volume	PCE	Lane Use Factor	Lane Volume	Opposing Lefts	Critical Lane Volume	*
NBLT	445	1.00	0.53	236	0	236	*
SBLTR	1145	1.00	0.53	607	0	607	*
EBT	257	1.00	0.53	136	0	136	
WBT + EBL	109	1.00	0.53	58	161	219	*
					Critical Volume	1062	OK
					V/C	0.69	

De facto through lane(s) assumed for SB approach.

Movement	Volume	PCE	Lane Use Factor	Lane Volume	Opposing Lefts	Critical Lane Volume	*
					Critical Volume	0	OK
					V/C	0.00	

Maryland State Highway Administration
Turning Movement Summary and
Level of Service

Count Date:
Conditions: Future
Design Year: 2022

Location: Randolph @ Lauderdale
Computed By: BJM
Date: 3/3/14

Montgomery County Method

Morning Peak Hour 7:15-8:15 am

Lane Configuration

Evening Peak Hour 5:00-6:00 pm

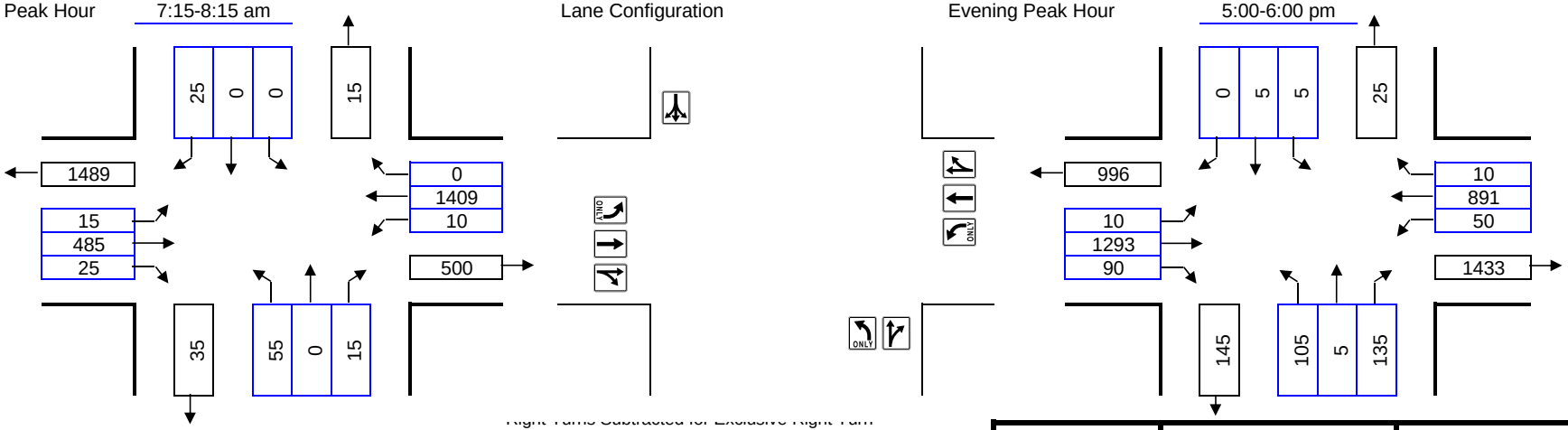

Right Turns Subtracted for Exclusive Right Turn Overlap Phasing or Right Turn on Red and Free Rights:

	AM	PM
NB Approach:	NB	NB
SB Approach:	SB	SB
EB Approach:	EB	EB
WB Approach:	WB	WB

Number of Lanes	Lane Use Factor		Opposing Volume (vph)		PCE
1 =	1.00	Congestion Standard	≤	199	1.1
2 =	0.53	= 1550	≤	599	2.0
3 =	0.37	for	≤	799	3.0
4 =	0.30	North Bethesda	≤	999	4.0
Dbl-left	0.60	Policy	≥	1000	5.0
		Area			

Movement	Volume	PCE	Lane Use Factor	Lane Volume	Opposing Lefts	Critical Lane Volume	*
NBTR	15	1.00	1.00	15	0	15	
SBTR + NBL	25	1.00	1.00	25	55	80	*
EBTR + WBL	510	1.00	0.53	270	10	280	
WBT + EBL	1409	1.00	0.53	747	15	762	*
					Critical Volume	842	OK
					V/C	0.54	

Movement	Volume	PCE	Lane Use Factor	Lane Volume	Opposing Lefts	Critical Lane Volume	*
NBTR + SBL	140	1.00	1.00	140	5	145	*
SBLT + NBL	10	1.00	1.00	10	105	115	
EBTR + WBL	1383	1.00	0.53	733	50	783	*
WBTR + EBL	901	1.00	0.53	478	10	488	
					Critical Volume	928	OK
					V/C	0.60	

Maryland State Highway Administration
Turning Movement Summary and Level of Service

Count Date:
Conditions: Future SATURDAY
Design Year: 2022

Location: Randolph @ Lauderdale
Computed By: LL
Date: 3/3/14

Montgomery County Method

Morning Peak Hour 7:15-8:15 am

Lane Configuration

Evening Peak Hour 5:00-6:00 pm

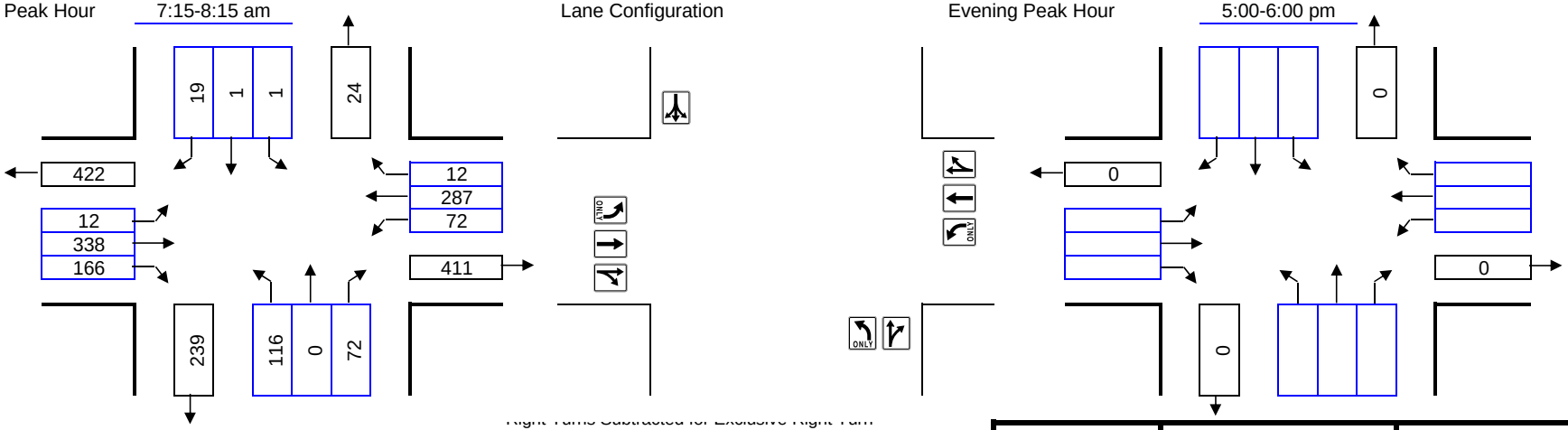

Right Turns Subtracted for Exclusive Right Turn Overlap Phasing or Right Turn on Red and Free Rights:

	AM	PM
NB Approach:	NB	NB
SB Approach:	SB	SB
EB Approach:	EB	EB
WB Approach:	WB	WB

Number of Lanes	Lane Use Factor		Opposing Volume (vph)		PCE
1 =	1.00	Congestion Standard	≤	199	1.1
2 =	0.53	= 1550	≤	599	2.0
3 =	0.37	for	≤	799	3.0
4 =	0.30	North Bethesda	≤	999	4.0
Dbl-left	0.60	Policy	≥	1000	5.0
		Area			

Movement	Volume	PCE	Lane Use Factor	Lane Volume	Opposing Lefts	Critical Lane Volume	*
NBTR + SBL	72	1.00	1.00	72	1	73	
SBLTR + NBL	21	1.00	1.00	21	116	137	*
EBTR + WBL	504	1.00	0.53	267	72	339	*
WBTR + EBL	299	1.00	0.53	158	12	170	
					Critical Volume	476	OK
					V/C	0.31	

Movement	Volume	PCE	Lane Use Factor	Lane Volume	Opposing Lefts	Critical Lane Volume	*
					Critical Volume	0	OK
					V/C	0.00	

Maryland State Highway Administration
Turning Movement Summary and
Level of Service

Count Date:
Conditions: Future
Design Year: 2022

Location: Old Georgetown Road/Hoya St @ Executive Blvd
Computed By: BJM
Date: 3/27/14

Montgomery County Method

Morning Peak Hour 7:45-8:45 am

Lane Configuration

Evening Peak Hour 4:45-5:45 pm

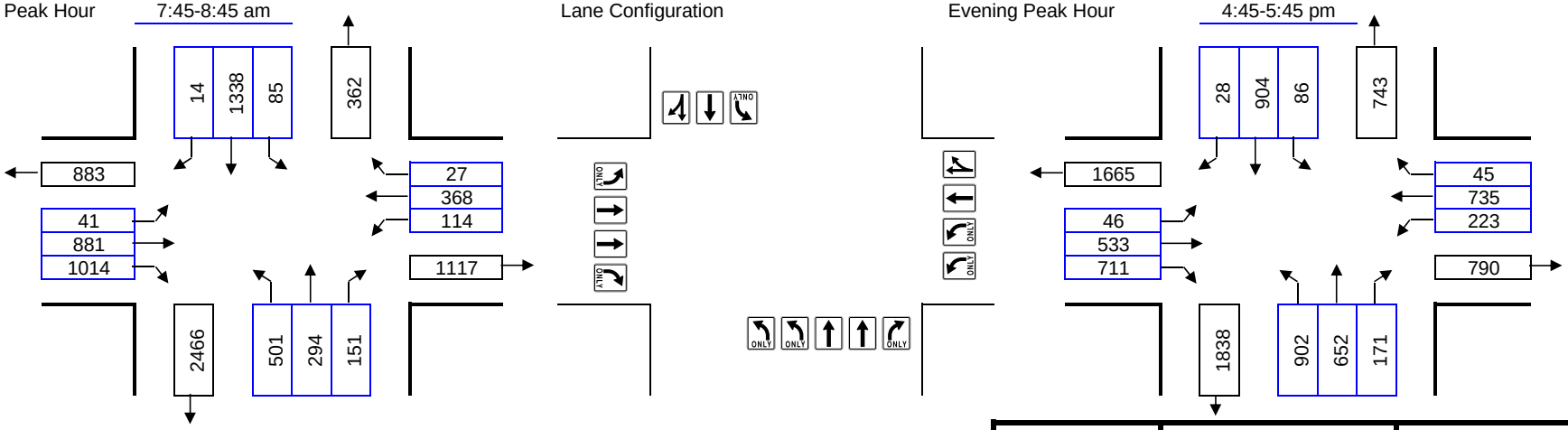

Right Turns Subtracted for Exclusive Right Turn Overlap Phasing or Right Turn on Red:

	AM		PM	
NB Approach:	NB		NB	
SB Approach:	SB		SB	
EB Approach:	EB	301	EB	541
WB Approach:	WB		WB	

Number of Lanes	Lane Use Factor		Opposing Volume (vph)		PCE
1 =	1.00	Congestion Standard	≤	199	1.1
2 =	0.53	= 1800	≤	599	2.0
3 =	0.37	for	≤	799	3.0
4 =	0.30	White Flint	≤	999	4.0
Dbl-left	0.60	Policy	≥	1000	5.0
		Area			

Movement	Volume	PCE	Lane Use Factor	Lane Volume	Opposing Lefts	Critical Lane Volume	*
NBT + SBL	294	1.00	0.53	156	85	241	
SBTR + NBL	1352	1.00	0.53	717	301	1018	*
EBR + WBL	713	1.00	1.00	713	68	781	*
WBTR + EBL	395	1.00	0.53	209	41	250	
					Critical Volume	1799	OK
					V/C	1.00	

Movement	Volume	PCE	Lane Use Factor	Lane Volume	Opposing Lefts	Critical Lane Volume	*
NBT + SBL	652	1.00	0.53	346	86	432	
SBTR + NBL	932	1.00	0.53	494	541	1035	*
EBT + WBL	533	1.00	0.53	282	134	416	
WBTR + EBL	780	1.00	0.53	413	46	459	*
					Critical Volume	1494	OK
					V/C	0.83	

Maryland State Highway Administration
Turning Movement Summary and
Level of Service

Count Date:
Conditions: Future
Design Year: 2022 - SATURDAY

Location: Old Georgetown Road/Hoya St @ Executive Blvd.
Computed By: LL
Date: 3/27/14

Montgomery County Method

Morning Peak Hour 7:00-8:00 am

Lane Configuration

Evening Peak Hour 5:00-6:00 pm

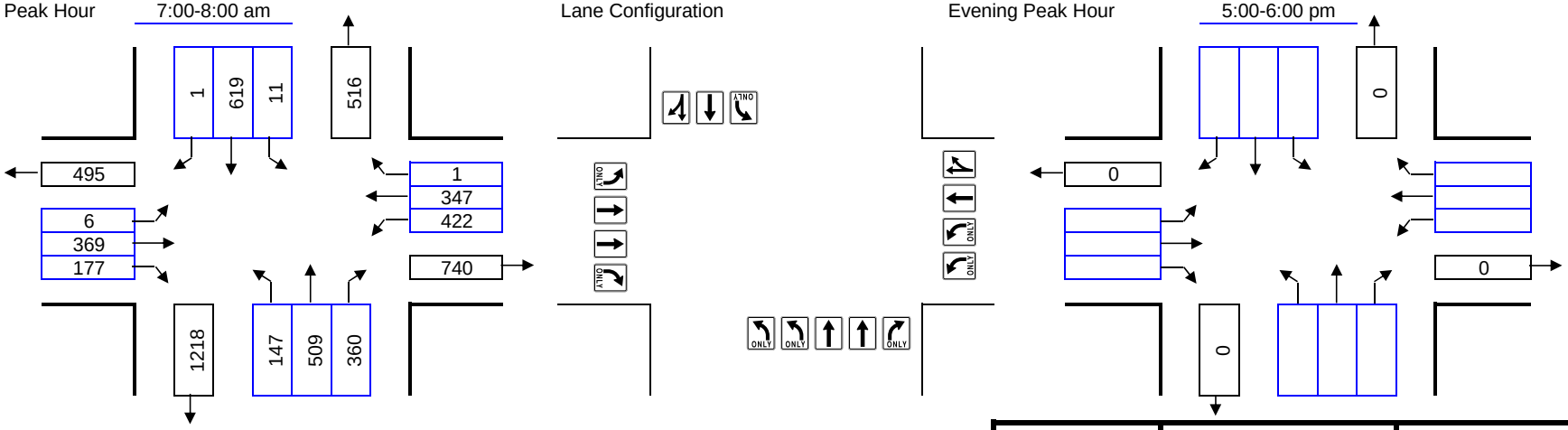

Right Turns Subtracted for Exclusive Right Turn Overlap Phasing or Right Turn on Red:

	AM	PM
NB Approach:	NB	NB
SB Approach:	SB	SB
EB Approach:	EB	EB
WB Approach:	WB	WB

Number of Lanes	Lane Use Factor		Opposing Volume (vph)		PCE
1 =	1.00	Congestion Standard	≤	199	1.1
2 =	0.53	= 1800	≤	599	2.0
3 =	0.37	for	≤	799	3.0
4 =	0.30	White Flint	≤	999	4.0
Dbl-left	0.60	Policy Area	≥	1000	5.0

Movement	Volume	PCE	Lane Use Factor	Lane Volume	Opposing Lefts	Critical Lane Volume	*
NBR + SBL	360	1.00	1.00	360	11	371	
SBTR + NBL	620	1.00	0.53	329	88	417	*
EBT + WBL	369	1.00	0.53	196	253	449	*
WBTR + EBL	348	1.00	0.53	184	6	190	
					Critical Volume	866	OK
					V/C	0.48	

Movement	Volume	PCE	Lane Use Factor	Lane Volume	Opposing Lefts	Critical Lane Volume	*
					Critical Volume	0	OK
					V/C	0.00	

Maryland State Highway Administration
Turning Movement Summary and
Level of Service

Count Date:
Conditions: Future
Design Year: 2022

Location: Old Georgetown Road @ Executive Blvd./Mid Pike

Computed By: BJM Date: 3/27/14

Montgomery County Method

Morning Peak Hour 7:00-8:00 am

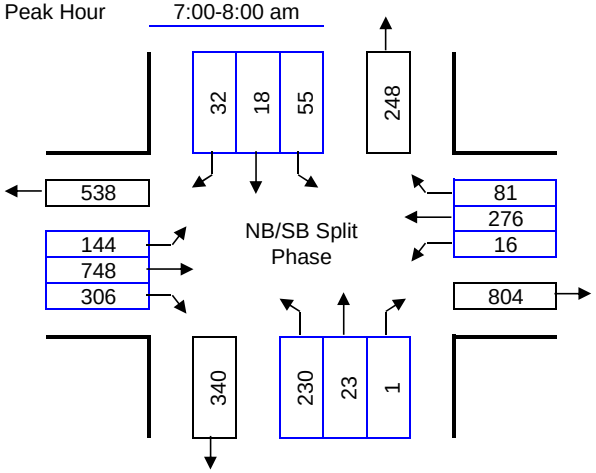

Lane Configuration

Evening Peak Hour 5:00-6:00 pm

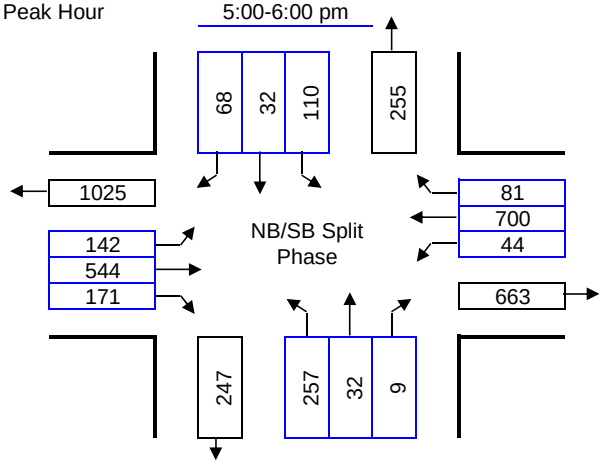

Right Turns Subtracted for Exclusive Right Turn Overlap Phasing or Right Turn on Red:

	AM	PM
NB Approach:	NB	NB
SB Approach:	SB	SB
EB Approach:	EB	EB
WB Approach:	WB	WB

Number of Lanes	Lane Use Factor		Opposing Volume (vph)		PCE
1 =	1.00	Congestion Standard	≤	199	1.1
2 =	0.53	= 1800	≤	599	2.0
3 =	0.37	for	≤	799	3.0
4 =	0.30	White Flint	≤	999	4.0
Dbl-left	0.60	Policy Area	≥	1000	5.0

Movement	Volume	PCE	Lane Use Factor	Lane Volume	Opposing Lefts	Critical Lane Volume	*
NBLT	253	1.00	0.60	152	0	152	*
SBL	55	1.00	1.00	55	0	55	*
EBT + WBL	748	1.00	0.53	396	16	412	*
WBT + EBL	276	1.00	0.53	146	144	290	
					Critical Volume	619	OK
					V/C	0.34	

Movement	Volume	PCE	Lane Use Factor	Lane Volume	Opposing Lefts	Critical Lane Volume	*
NBLT	289	1.00	0.60	173	0	173	*
SBL	110	1.00	1.00	110	0	110	*
EBT + WBL	544	1.00	0.53	288	44	332	
WBT + EBL	700	1.00	0.53	371	142	513	*
					Critical Volume	796	OK
					V/C	0.44	

Maryland State Highway Administration
Turning Movement Summary and
Level of Service

Count Date:
Conditions: Future - Volume Update
Design Year: 2022 - SATURDAY

Location: Old Georgetown Road @ Executive Blvd./Mid Pike
Computed By: LL
Date: 3/27/14

Montgomery County Method

Morning Peak Hour 7:00-8:00 am

Lane Configuration

Evening Peak Hour 5:00-6:00 pm

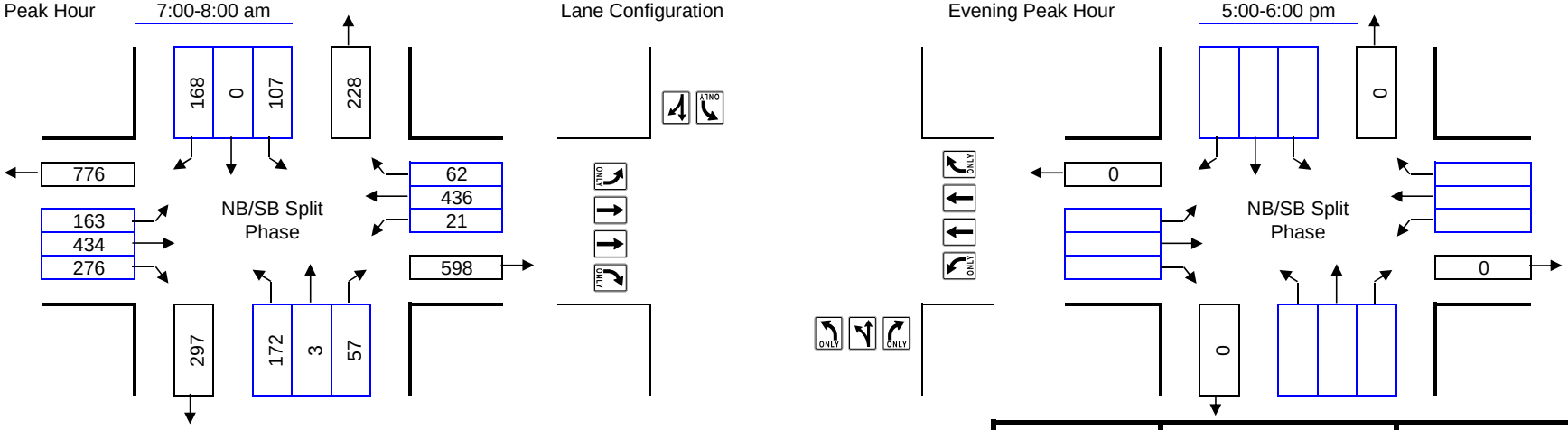

Right Turns Subtracted for Exclusive Right Turn
Overlap Phasing or Right Turn on Red:

	AM	PM
NB Approach:	NB	NB
SB Approach:	SB	SB
EB Approach:	EB	EB
WB Approach:	WB	WB

Number of Lanes	Lane Use Factor		Opposing Volume (vph)		PCE
1 =	1.00	Congestion Standard	≤	199	1.1
2 =	0.53	= 1800	≤	599	2.0
3 =	0.37	for	≤	799	3.0
4 =	0.30	White Flint	≤	999	4.0
Dbl-left	0.60	Policy	≥	1000	5.0
		Area			

Movement	Volume	PCE	Lane Use Factor	Lane Volume	Opposing Lefts	Critical Lane Volume	*
NBLT	175	1.00	0.60	105	0	105	*
SBTR	168	1.00	1.00	168	0	168	*
EBR + WBL	276	1.00	1.00	276	21	297	
WBT + EBL	436	1.00	0.53	231	163	394	*
					Critical Volume	667	OK
					V/C	0.37	

Movement	Volume	PCE	Lane Use Factor	Lane Volume	Opposing Lefts	Critical Lane Volume	*
					Critical Volume	0	OK
					V/C	0.00	

Maryland State Highway Administration
Turning Movement Summary and
Level of Service

Count Date:
Conditions: Future
Design Year: 2022

Location: Old Georgetown @ Nebel
Computed By: BJM
Date: 3/28/14

Montgomery County Method

Morning Peak Hour 7:15-8:15 am

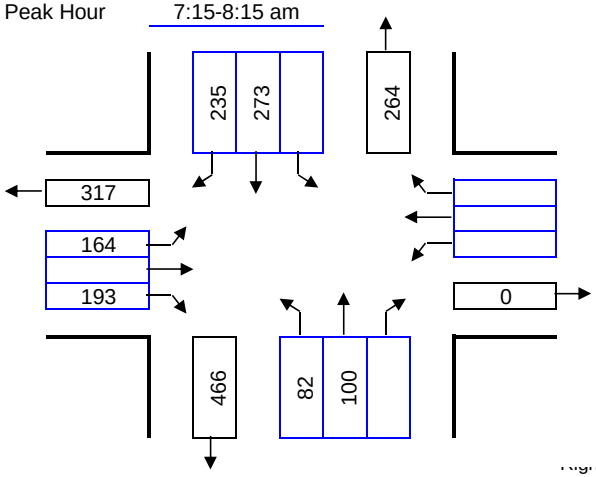

Lane Configuration

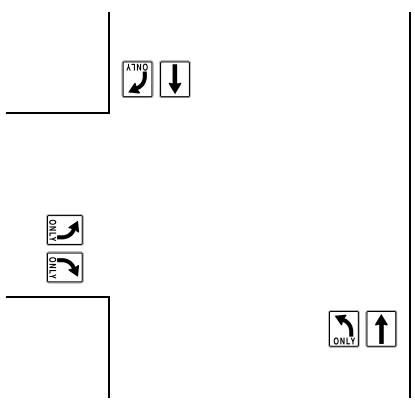

Evening Peak Hour 5:00-6:00 pm

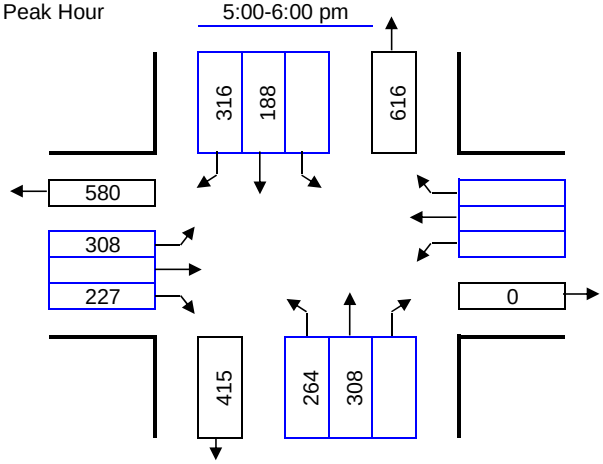

Right Turns Subtracted for Exclusive Right Turn Overlap Phasing or Right Turn on Red and Free Rights:

	AM	PM
NB Approach:	NB	NB
SB Approach:	SB	SB 308
EB Approach:	EB	EB
WB Approach:	WB	WB

Number of Lanes	Lane Use Factor		Opposing Volume (vph)		PCE
1 =	1.00	Congestion Standard	≤	199	1.1
2 =	0.53	= 1800	≤	599	2.0
3 =	0.37	for	≤	799	3.0
4 =	0.30	White Flint	≤	999	4.0
Dbl-left	0.60	Policy Area	≥	1000	5.0

Movement	Volume	PCE	Lane Use Factor	Lane Volume	Opposing Lefts	Critical Lane Volume	*
NBT	100	1.00	1.00	100	0	100	
SBT + NBL	273	1.00	1.00	273	82	355	*
EBR	193	1.00	1.00	193	0	193	*
					Critical Volume	548	OK
						V/C	0.30

Movement	Volume	PCE	Lane Use Factor	Lane Volume	Opposing Lefts	Critical Lane Volume	*
NBT	308	1.00	1.00	308	0	308	
SBT + NBL	188	1.00	1.00	188	264	452	*
EBL	308	1.00	1.00	308	0	308	*
					Critical Volume	760	OK
						V/C	0.42

Maryland State Highway Administration
Turning Movement Summary and
Level of Service

Count Date:
Conditions: Future SATURDAY
Design Year: 2022

Location: Old Georgetown @ Nebel
Computed By: LL
Date: 3/28/14

Montgomery County Method

Morning Peak Hour 7:15-8:15 am

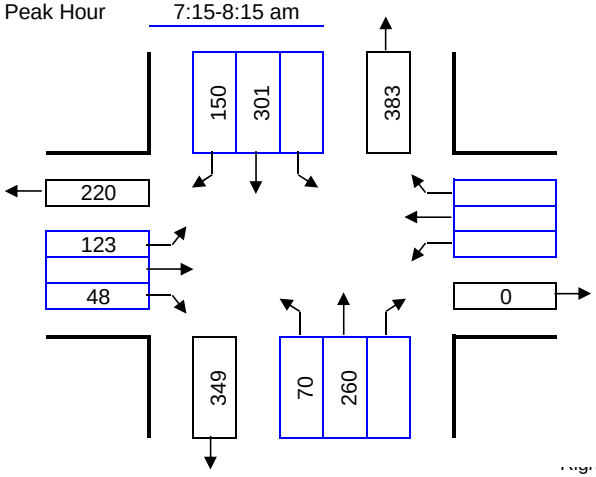

Lane Configuration

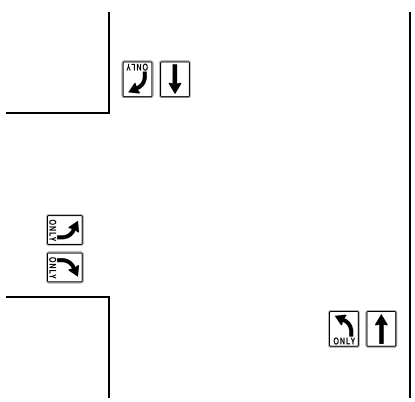

Evening Peak Hour 5:00-6:00 pm

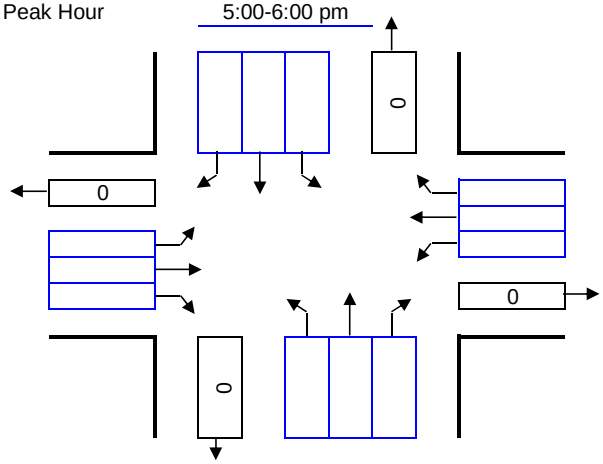

Right Turns Subtracted for Exclusive Right Turn Overlap Phasing or Right Turn on Red and Free Rights:

	AM	PM
NB Approach:	NB	NB
SB Approach:	SB	SB
EB Approach:	EB	EB
WB Approach:	WB	WB

Number of Lanes	Lane Use Factor		Opposing Volume (vph)		PCE
1 =	1.00	Congestion Standard	≤	199	1.1
2 =	0.53	= 1800	≤	599	2.0
3 =	0.37	for	≤	799	3.0
4 =	0.30	White Flint	≤	999	4.0
Dbl-left	0.60	Policy Area	≥	1000	5.0

Movement	Volume	PCE	Lane Use Factor	Lane Volume	Opposing Lefts	Critical Lane Volume	*
NBT	260	1.00	1.00	260	0	260	
SBT + NBL	301	1.00	1.00	301	70	371	*
EBL	123	1.00	1.00	123	0	123	*
					Critical Volume	494	OK
						V/C	0.27

Movement	Volume	PCE	Lane Use Factor	Lane Volume	Opposing Lefts	Critical Lane Volume	*
					Critical Volume	0	OK
						V/C	0.00

Maryland State Highway Administration
Turning Movement Summary and
Level of Service

Count Date:
Conditions: Future
Design Year: 2022

Location: Old Georgetown Road @ Nicholson Ln
Computed By: BJM
Date: 3/27/14

Montgomery County Method

Morning Peak Hour 7:00-8:00 am

Lane Configuration

Evening Peak Hour 5:00-6:00 pm

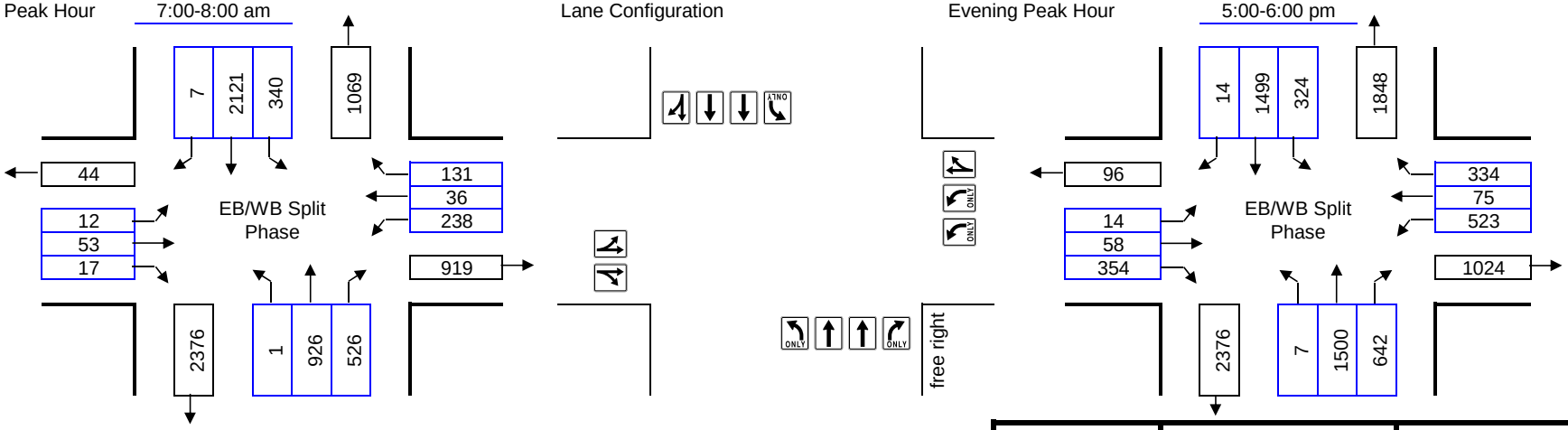

Right Turns Subtracted for Exclusive Right Turn Overlap Phasing or Right Turn on Red:

	AM		PM	
NB Approach:	NB	526	NB	
SB Approach:	SB		SB	
EB Approach:	EB		EB	7
WB Approach:	WB		WB	

Number of Lanes	Lane Use Factor		Opposing Volume (vph)		PCE
1 =	1.00	Congestion Standard	≤	199	1.1
2 =	0.53	= 1800	≤	599	2.0
3 =	0.37	for	≤	799	3.0
4 =	0.30	White Flint	≤	999	4.0
Dbl-left	0.60	Policy Area	≥	1000	5.0

Movement	Volume	PCE	Lane Use Factor	Lane Volume	Opposing Lefts	Critical Lane Volume	*
NBT + SBL	926	1.00	0.53	491	340	831	*
SBTR + NBL	2128	1.00	0.37	787	1	788	
EBLTR	82	1.00	0.53	43	0	43	*
WBTR	167	1.00	1.00	167	0	167	*
					Critical Volume	1041	OK
					V/C	0.58	

Movement	Volume	PCE	Lane Use Factor	Lane Volume	Opposing Lefts	Critical Lane Volume	*
NBT + SBL	1500	1.00	0.53	795	324	1119	*
SBTR + NBL	1513	1.00	0.37	560	7	567	
EBR	347	1.00	1.00	347	0	347	*
WBTR	409	1.00	1.00	409	0	409	*
					Critical Volume	1875	F
					V/C	1.04	

De facto RT lane(s) assumed for EB approach.

Maryland State Highway Administration
Turning Movement Summary and
Level of Service

Count Date:
Conditions: Future SATURDAY
Design Year: 2022

Location: Old Georgetown Road @ Nicholson Ln
Computed By: LL
Date: 3/28/14

Montgomery County Method

Morning Peak Hour 7:00-8:00 am

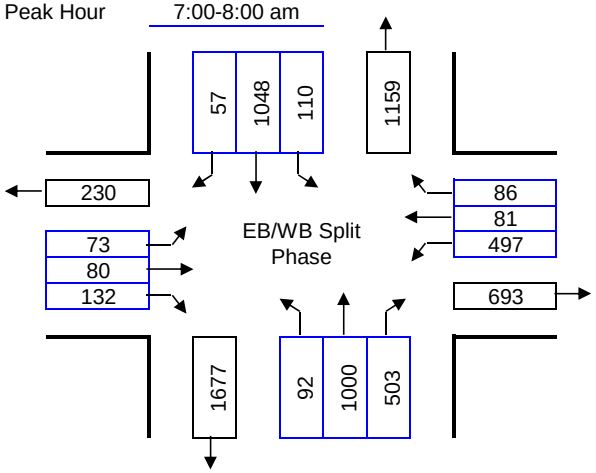

Lane Configuration

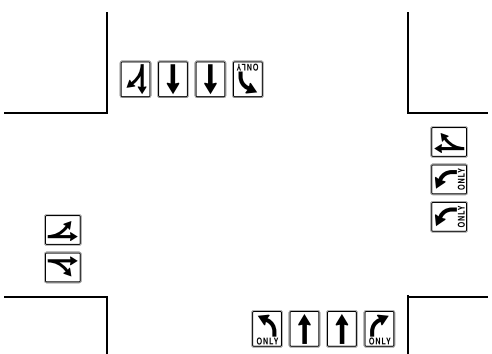

Evening Peak Hour 5:00-6:00 pm

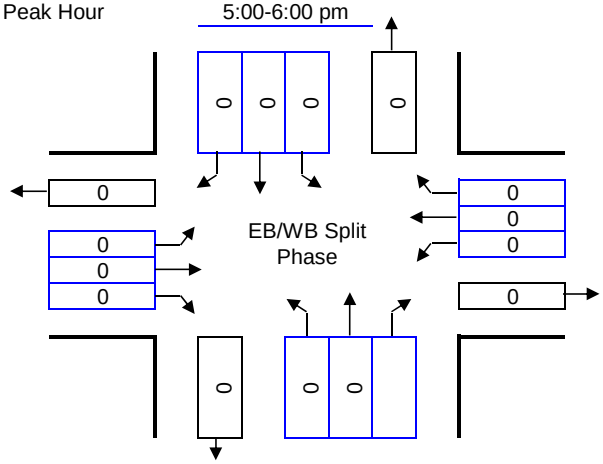

Right Turns Subtracted for Exclusive Right Turn
Overlap Phasing or Right Turn on Red:

	AM	PM
NB Approach:	NB	NB
SB Approach:	SB	SB
EB Approach:	EB	EB
WB Approach:	WB	WB

Number of Lanes	Lane Use Factor		Opposing Volume (vph)		PCE
1 =	1.00	Congestion Standard	≤	199	1.1
2 =	0.53	= 1800	≤	599	2.0
3 =	0.37	for	≤	799	3.0
4 =	0.30	White Flint	≤	999	4.0
Dbl-left	0.60	Policy	≥	1000	5.0
		Area			

Movement	Volume	PCE	Lane Use Factor	Lane Volume	Opposing Lefts	Critical Lane Volume	*
NBT + SBL	1000	1.00	0.53	530	110	640	*
SBTR + NBL	1105	1.00	0.37	409	92	501	
EBLTR	285	1.00	0.53	151	0	151	*
WBL	497	1.00	0.60	298	0	298	*
					Critical Volume	1089	OK
					V/C	0.61	

Movement	Volume	PCE	Lane Use Factor	Lane Volume	Opposing Lefts	Critical Lane Volume	*
					Critical Volume	0	OK
					V/C	0.00	

Maryland State Highway Administration
Turning Movement Summary and
Level of Service

Count Date:
Conditions: Future
Design Year: 2022

Location: Nicholson Ln @ Executive Blvd.
Computed By: BJM
Date: 4/7/14

Montgomery County Method

Morning Peak Hour 7:00-8:00 am

Lane Configuration

Evening Peak Hour 5:00-6:00 pm

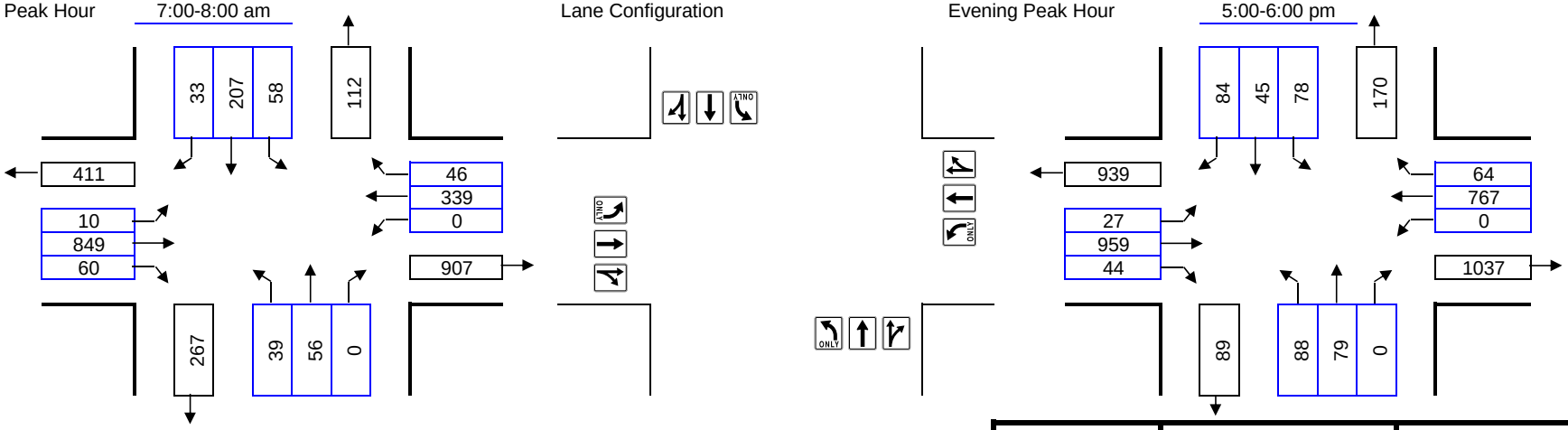

Right Turns Subtracted for Exclusive Right Turn Overlap Phasing or Right Turn on Red:

	AM	PM
NB Approach:	NB	NB
SB Approach:	SB	SB 27
EB Approach:	EB	EB
WB Approach:	WB	WB

Number of Lanes	Lane Use Factor		Opposing Volume (vph)		PCE
1 =	1.00	Congestion Standard	≤	199	1.1
2 =	0.53	= 1800	≤	599	2.0
3 =	0.37	for	≤	799	3.0
4 =	0.30	White Flint	≤	999	4.0
Dbl-left	0.60	Policy Area	≥	1000	5.0

Movement	Volume	PCE	Lane Use Factor	Lane Volume	Opposing Lefts	Critical Lane Volume	*
NBT + SBL	56	1.00	0.53	30	58	88	
SBTR + NBL	240	1.00	0.53	127	39	166	*
EBTR	909	1.00	0.53	482	0	482	*
WBTR + EBL	385	1.00	0.53	204	10	214	
					Critical Volume	648	OK
					V/C	0.36	

Movement	Volume	PCE	Lane Use Factor	Lane Volume	Opposing Lefts	Critical Lane Volume	*
NBT + SBL	79	1.00	0.53	42	78	120	
SBR + NBL	57	1.00	1.00	57	88	145	*
EBTR	1003	1.00	0.53	532	0	532	*
WBTR + EBL	831	1.00	0.53	440	27	467	
					Critical Volume	677	OK
					V/C	0.38	

De facto RT lane(s) assumed for SB approach.

Maryland State Highway Administration
Turning Movement Summary and
Level of Service

Count Date:
Conditions: Future SATURDAY
Design Year: 2022

Location: Nicholson Ln @ Executive Blvd.
Computed By: LL
Date: 3/4/14

Montgomery County Method

Morning Peak Hour 7:00-8:00 am

Lane Configuration

Evening Peak Hour 5:00-6:00 pm

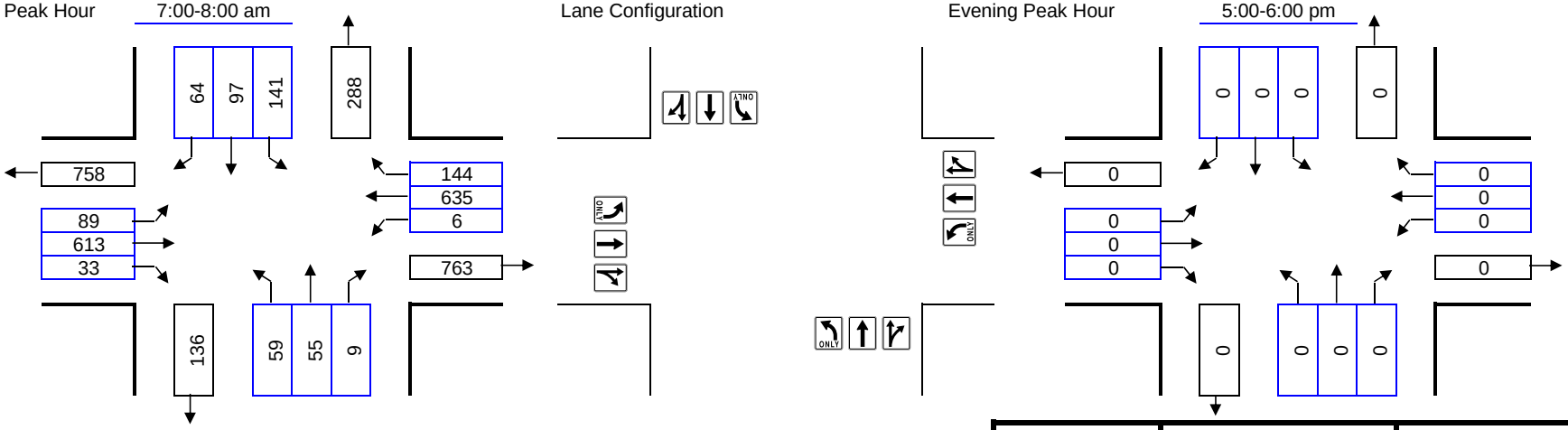

Right Turns Subtracted for Exclusive Right Turn Overlap Phasing or Right Turn on Red:

	AM	PM
NB Approach:	NB	NB
SB Approach:	SB	SB
EB Approach:	EB	EB
WB Approach:	WB	WB

Number of Lanes	Lane Use Factor		Opposing Volume (vph)		PCE
1 =	1.00	Congestion Standard	≤	199	1.1
2 =	0.53	= 1800	≤	599	2.0
3 =	0.37	for	≤	799	3.0
4 =	0.30	White Flint	≤	999	4.0
Dbl-left	0.60	Policy Area	≥	1000	5.0

Movement	Volume	PCE	Lane Use Factor	Lane Volume	Opposing Lefts	Critical Lane Volume	*
NBTR + SBL	64	1.00	0.53	34	141	175	*
SBTR + NBL	161	1.00	0.53	85	59	144	
EBTR + WBL	646	1.00	0.53	342	6	348	
WBTR + EBL	779	1.00	0.53	413	89	502	*
					Critical Volume	677	OK
					V/C	0.38	

Movement	Volume	PCE	Lane Use Factor	Lane Volume	Opposing Lefts	Critical Lane Volume	*
					Critical Volume	0	OK
					V/C	0.00	

Maryland State Highway Administration
Turning Movement Summary and
Level of Service

Count Date:
Conditions: Future
Design Year: 2022

Location: Nicholson @ Nebel
Computed By: BJM
Date: 3/28/14

Montgomery County Method

Morning Peak Hour 7:15-8:15 am

Lane Configuration

Evening Peak Hour 5:00-6:00 pm

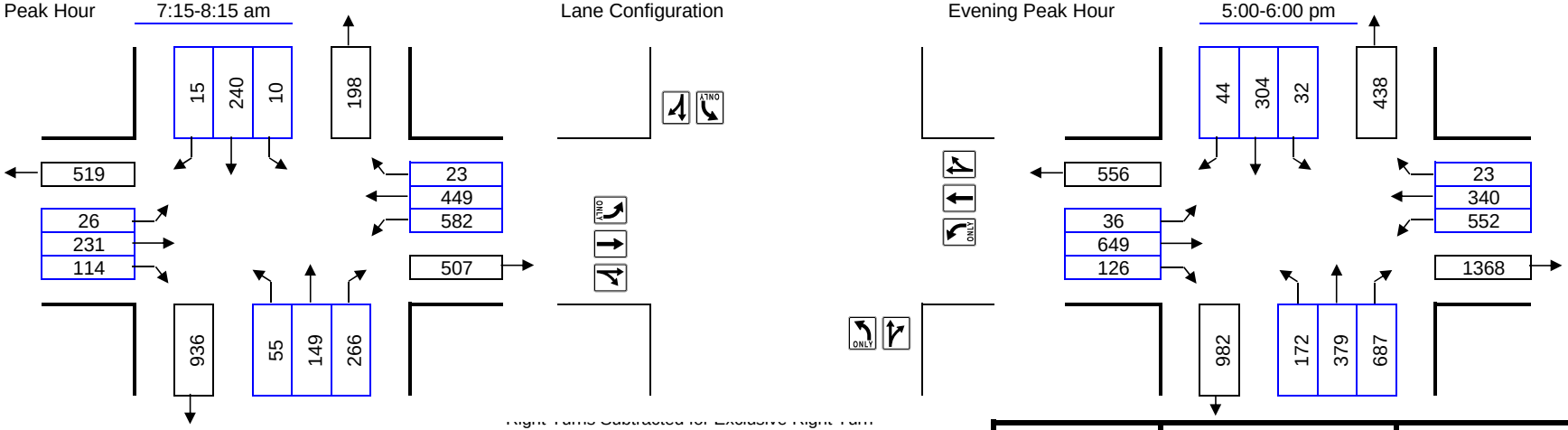

Right Turns Subtracted for Exclusive Right Turn Overlap Phasing or Right Turn on Red and Free Rights:

	AM	PM
NB Approach:	NB	NB
SB Approach:	SB	SB
EB Approach:	EB	EB
WB Approach:	WB	WB

Number of Lanes	Lane Use Factor		Opposing Volume (vph)		PCE
1 =	1.00	Congestion Standard	≤	199	1.1
2 =	0.53	= 1800	≤	599	2.0
3 =	0.37	for	≤	799	3.0
4 =	0.30	White Flint	≤	999	4.0
Dbl-left	0.60	Policy	≥	1000	5.0
		Area			

Movement	Volume	PCE	Lane Use Factor	Lane Volume	Opposing Lefts	Critical Lane Volume	*
NBTR + SBL	415	1.00	1.00	415	10	425	*
SBTR + NBL	255	1.00	1.00	255	55	310	
EBTR + WBL	345	1.00	0.53	183	582	765	*
WBTR + EBL	472	1.00	0.53	250	26	276	
					Critical Volume	1190	OK
					V/C	0.66	

Movement	Volume	PCE	Lane Use Factor	Lane Volume	Opposing Lefts	Critical Lane Volume	*
NBTR + SBL	1066	1.00	1.00	1066	32	1098	*
SBTR + NBL	348	1.00	1.00	348	172	520	
EBTR + WBL	775	1.00	0.53	411	552	963	*
WBTR + EBL	363	1.00	0.53	192	36	228	
					Critical Volume	2061	F
					V/C	1.15	

Maryland State Highway Administration
Turning Movement Summary and
Level of Service

Count Date:
Conditions: Future SATURDAY
Design Year: 2022

Location: Nicholson @ Nebel
Computed By: LL
Date: 3/28/14

Montgomery County Method

Morning Peak Hour 7:15-8:15 am

Lane Configuration

Evening Peak Hour 5:00-6:00 pm

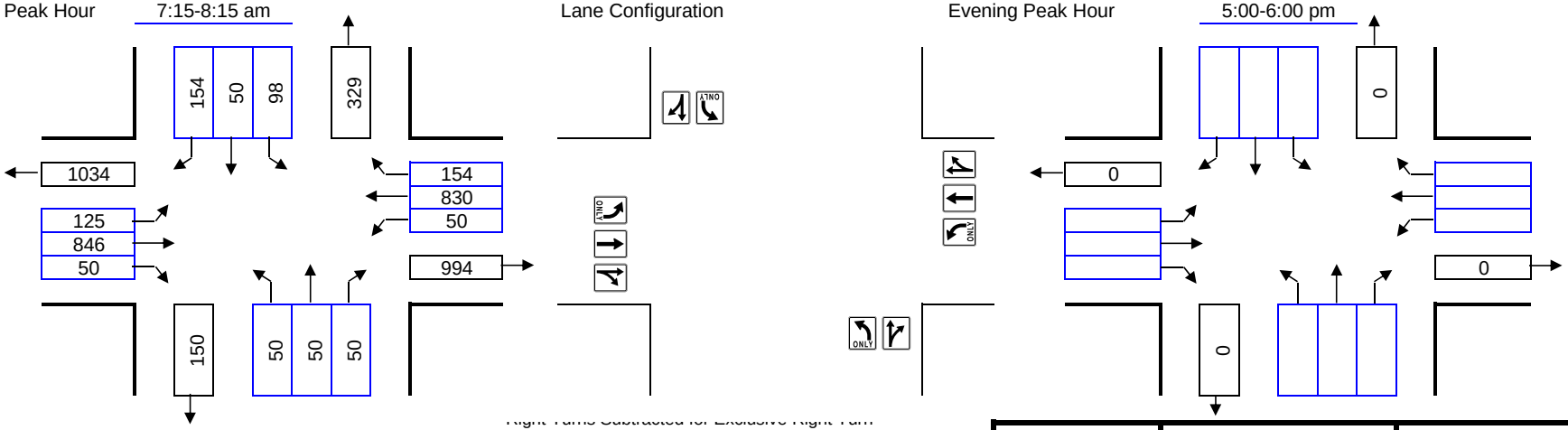

Right Turns Subtracted for Exclusive Right Turn Overlap Phasing or Right Turn on Red and Free Rights:

	AM	PM
NB Approach:	NB	NB
SB Approach:	SB	SB
EB Approach:	EB	EB
WB Approach:	WB	WB

Number of Lanes	Lane Use Factor		Opposing Volume (vph)		PCE
1 =	1.00	Congestion Standard	≤	199	1.1
2 =	0.53	= 1800	≤	599	2.0
3 =	0.37	for	≤	799	3.0
4 =	0.30	White Flint	≤	999	4.0
Dbl-left	0.60	Policy Area	≥	1000	5.0

Movement	Volume	PCE	Lane Use Factor	Lane Volume	Opposing Lefts	Critical Lane Volume	*
NBTR + SBL	100	1.00	1.00	100	98	198	
SBTR + NBL	204	1.00	1.00	204	50	254	*
EBTR + WBL	896	1.00	0.53	475	50	525	
WBTR + EBL	984	1.00	0.53	522	125	647	*
					Critical Volume	901	OK
					V/C	0.50	

Movement	Volume	PCE	Lane Use Factor	Lane Volume	Opposing Lefts	Critical Lane Volume	*
					Critical Volume	0	OK
					V/C	0.00	

Maryland State Highway Administration
Turning Movement Summary and
Level of Service

Count Date:
Conditions: Future
Design Year: 2022

Location: Old Georgetown Rd @ Poindexter Ln
Computed By: BJM
Date: 3/27/14

Montgomery County Method

Morning Peak Hour 7:00-8:00 am

Lane Configuration

Evening Peak Hour 5:00-6:00 pm

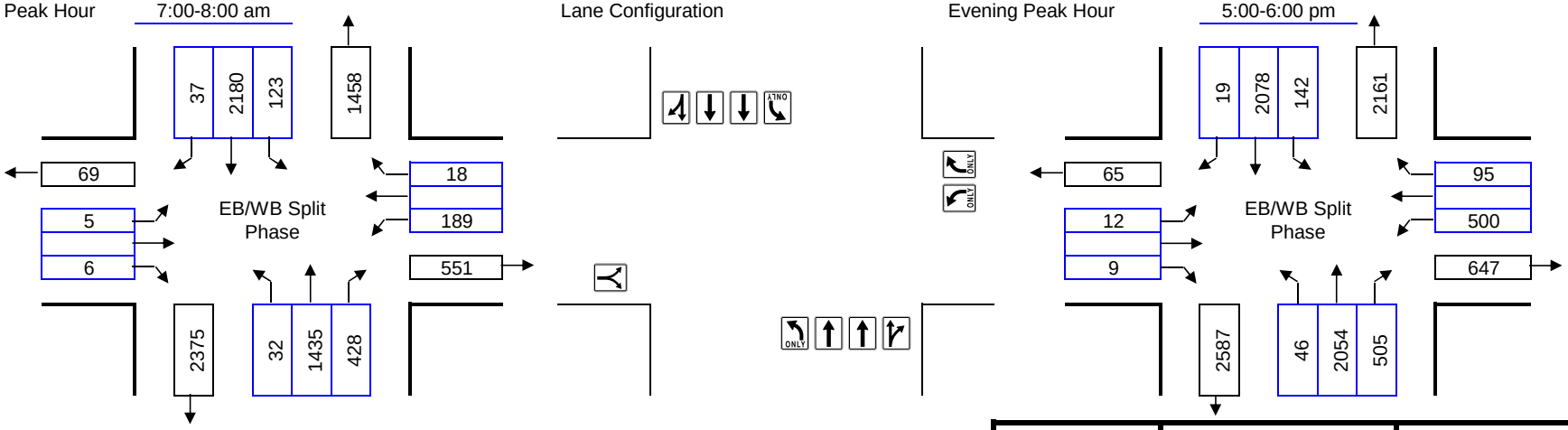

Right Turns Subtracted for Exclusive Right Turn Overlap Phasing or Right Turn on Red:

	AM	PM
NB Approach:	NB	NB
SB Approach:	SB	SB
EB Approach:	EB	EB
WB Approach:	WB	WB

Number of Lanes	Lane Use Factor		Opposing Volume (vph)		PCE
1 =	1.00	Congestion Standard	≤	199	1.1
2 =	0.53	= 1550	≤	599	2.0
3 =	0.37	for	≤	799	3.0
4 =	0.30	North Bethesda	≤	999	4.0
Dbl-left	0.60	Policy	≥	1000	5.0
		Area			

Movement	Volume	PCE	Lane Use Factor	Lane Volume	Opposing Lefts	Critical Lane Volume	*
NBTR + SBL	1863	1.00	0.37	689	123	812	
SBTR + NBL	2217	1.00	0.37	820	32	852	*
EBLR	11	1.00	1.00	11	0	11	*
WBL	189	1.00	1.00	189	0	189	*
					Critical Volume	1052	OK
					V/C	0.68	

Movement	Volume	PCE	Lane Use Factor	Lane Volume	Opposing Lefts	Critical Lane Volume	*
NBTR + SBL	2559	1.00	0.37	947	142	1089	*
SBTR + NBL	2097	1.00	0.37	776	46	822	
EBLR	21	1.00	1.00	21	0	21	*
WBL	500	1.00	1.00	500	0	500	*
					Critical Volume	1610	F
					V/C	1.04	

Maryland State Highway Administration
Turning Movement Summary and
Level of Service

Count Date:
Conditions: Future SATURDAY
Design Year: 2022

Location: Old Georgetown Rd @ Poindexter Ln
Computed By: LL
Date: 3/27/14

Montgomery County Method

Morning Peak Hour 7:00-8:00 am

Lane Configuration

Evening Peak Hour 5:00-6:00 pm

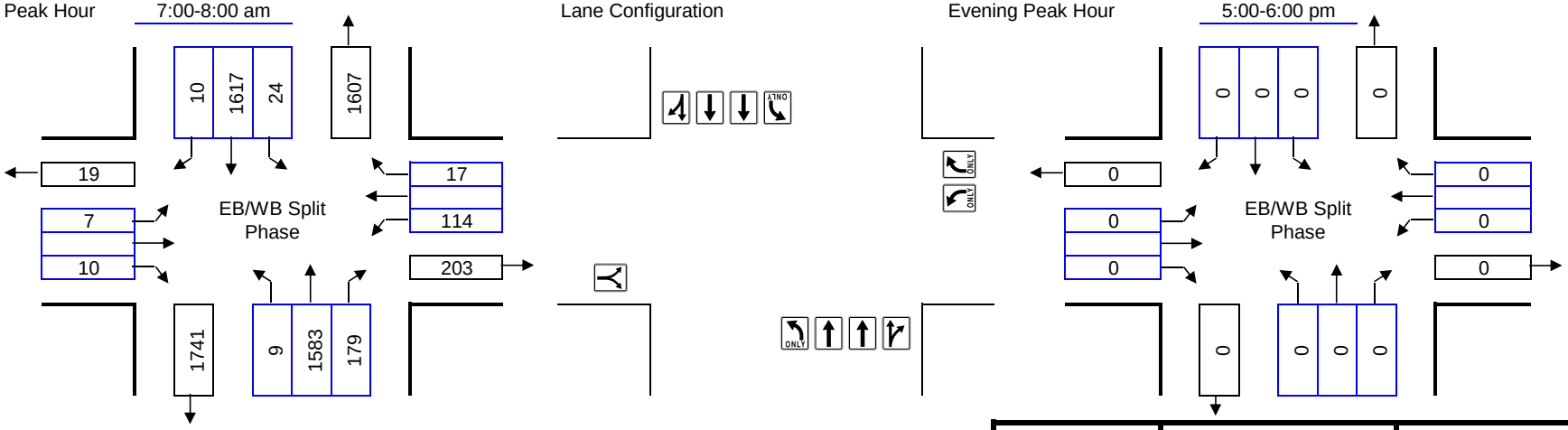

Right Turns Subtracted for Exclusive Right Turn Overlap Phasing or Right Turn on Red:

	AM	PM
NB Approach:	NB	NB
SB Approach:	SB	SB
EB Approach:	EB	EB
WB Approach:	WB	WB

Number of Lanes	Lane Use Factor		Opposing Volume (vph)		PCE
1 =	1.00	Congestion Standard	≤	199	1.1
2 =	0.53	= 1550	≤	599	2.0
3 =	0.37	for	≤	799	3.0
4 =	0.30	North Bethesda	≤	999	4.0
Dbl-left	0.60	Policy	≥	1000	5.0
		Area			

Movement	Volume	PCE	Lane Use Factor	Lane Volume	Opposing Lefts	Critical Lane Volume	*
NBTR + SBL	1762	1.00	0.37	652	24	676	*
SBTR + NBL	1627	1.00	0.37	602	9	611	
EBLR	17	1.00	1.00	17	0	17	*
WBL	114	1.00	1.00	114	0	114	*
					Critical Volume	807	OK
					V/C	0.52	

Movement	Volume	PCE	Lane Use Factor	Lane Volume	Opposing Lefts	Critical Lane Volume	*
					Critical Volume	0	OK
					V/C	0.00	

Maryland State Highway Administration
Turning Movement Summary and
Level of Service

Count Date:
Conditions: Future
Design Year: 2022

Location: Old Georgetown Rd @ Tuckerman Ln
Computed By: BJM
Date: 3/27/14

Montgomery County Method

Morning Peak Hour 7:00-8:00 am

Lane Configuration

Evening Peak Hour 5:00-6:00 pm

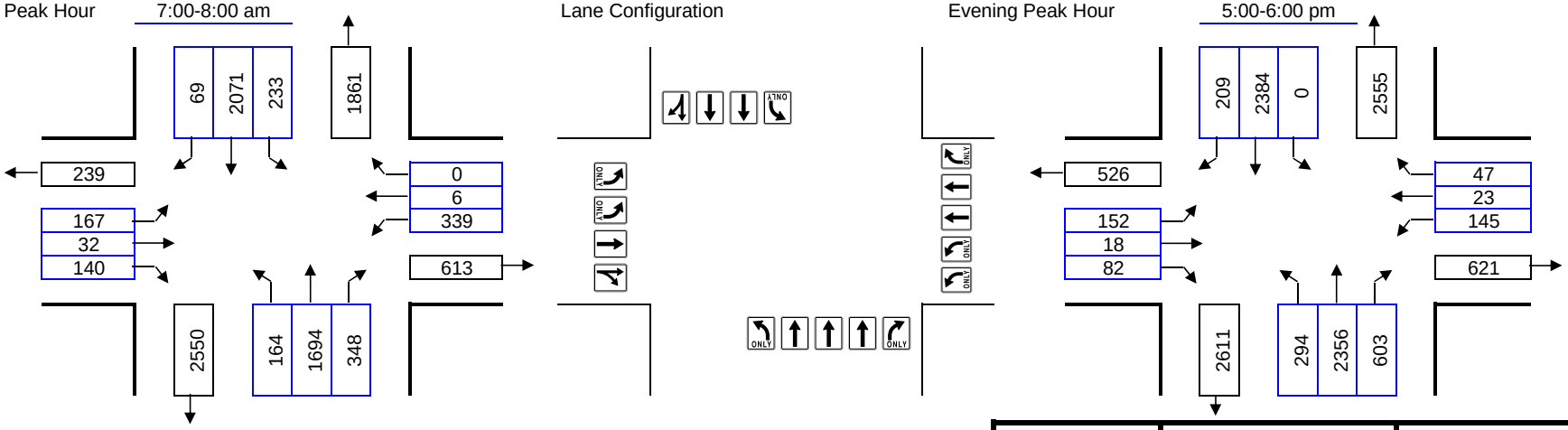

Right Turns Subtracted for Exclusive Right Turn Overlap Phasing or Right Turn on Red:

	AM		PM	
NB Approach:	NB		NB	
SB Approach:	SB		SB	
EB Approach:	EB	102	EB	60
WB Approach:	WB		WB	

Number of Lanes	Lane Use Factor		Opposing Volume (vph)		PCE
1 =	1.00	Congestion Standard	≤	199	1.1
2 =	0.53	= 1550	≤	599	2.0
3 =	0.37	for	≤	799	3.0
4 =	0.30	North Bethesda	≤	999	4.0
Dbl-left	0.60	Policy	≥	1000	5.0
		Area			

Movement	Volume	PCE	Lane Use Factor	Lane Volume	Opposing Lefts	Critical Lane Volume	*
NBT + SBL	1694	1.00	0.37	627	233	860	
SBTR + NBL	2140	1.00	0.37	792	164	956	*
EBR + WBL	38	1.00	1.00	38	203	241	*
WBT + EBL	6	1.00	0.53	3	100	103	
					Critical Volume	1197	OK
					V/C	0.77	

De facto RT lane(s) assumed for EB approach.

Movement	Volume	PCE	Lane Use Factor	Lane Volume	Opposing Lefts	Critical Lane Volume	*
NBT	2356	1.00	0.37	872	0	872	
SBTR + NBL	2593	1.00	0.37	959	294	1253	*
EBR + WBL	22	1.00	1.00	22	87	109	
WBR + EBL	47	1.00	1.00	47	91	138	*
					Critical Volume	1391	OK
					V/C	0.90	

De facto RT lane(s) assumed for EB approach.

Maryland State Highway Administration
Turning Movement Summary and
Level of Service

Count Date:
Conditions: Future SATURDAY
Design Year: 2022

Location: Old Georgetown Rd @ Tuckerman Ln
Computed By: LL
Date: 3/27/14

Montgomery County Method

Morning Peak Hour 7:00-8:00 am

Lane Configuration

Evening Peak Hour 5:00-6:00 pm

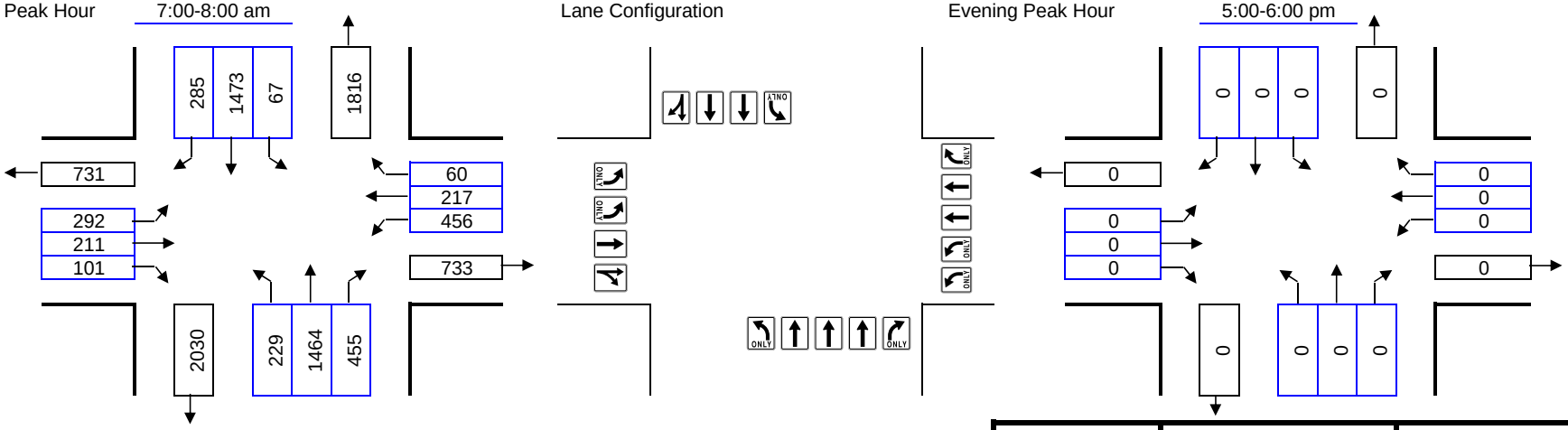

Right Turns Subtracted for Exclusive Right Turn Overlap Phasing or Right Turn on Red:

	AM	PM
NB Approach:	NB	NB
SB Approach:	SB	SB
EB Approach:	EB	EB
WB Approach:	WB	WB

Number of Lanes	Lane Use Factor		Opposing Volume (vph)		PCE
1 =	1.00	Congestion Standard	≤	199	1.1
2 =	0.53	= 1550	≤	599	2.0
3 =	0.37	for	≤	799	3.0
4 =	0.30	North Bethesda	≤	999	4.0
Dbl-left	0.60	Policy	≥	1000	5.0
		Area			

Movement	Volume	PCE	Lane Use Factor	Lane Volume	Opposing Lefts	Critical Lane Volume	*
NBT + SBL	1464	1.00	0.37	542	67	609	
SBTR + NBL	1758	1.00	0.37	650	229	879	*
EBTR + WBL	312	1.00	0.53	165	274	439	*
WBT + EBL	217	1.00	0.53	115	175	290	
					Critical Volume	1318	OK
					V/C	0.85	

Movement	Volume	PCE	Lane Use Factor	Lane Volume	Opposing Lefts	Critical Lane Volume	*
					Critical Volume	0	OK
					V/C	0.00	

Maryland State Highway Administration
Turning Movement Summary and
Level of Service

Count Date:
Conditions: Future
Design Year: 2022

Location: Old Georgetown @ 270 NB Ramp
Computed By: BJM
Date: 4/7/14

Montgomery County Method

Morning Peak Hour 7:15-8:15 am

Lane Configuration

Evening Peak Hour 5:00-6:00 pm

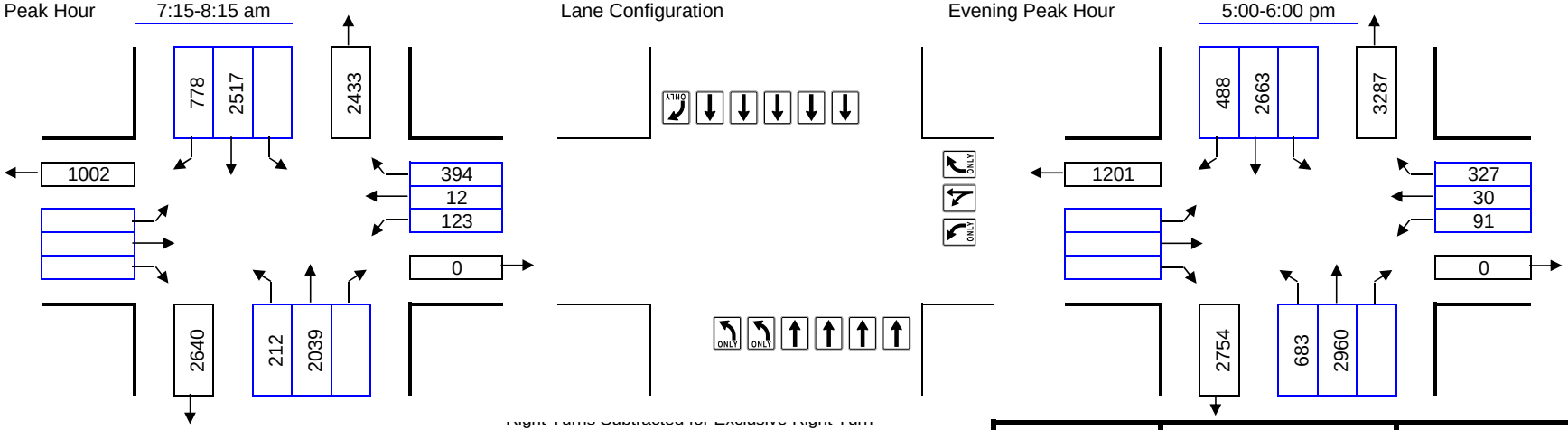

Right Turns Subtracted for Exclusive Right Turn Overlap Phasing or Right Turn on Red and Free Rights:

	AM	PM
NB Approach:	NB	NB
SB Approach:	SB	SB
EB Approach:	EB	EB
WB Approach:	WB	WB

Number of Lanes	Lane Use Factor		Opposing Volume (vph)		PCE
1 =	1.00	Congestion Standard	≤	199	1.1
2 =	0.53	= 1550	≤	599	2.0
3 =	0.37	for	≤	799	3.0
4 =	0.30	North Bethesda	≤	999	4.0
Dbl-left	0.60	Policy	≥	1000	5.0
		Area			

Movement	Volume	PCE	Lane Use Factor	Lane Volume	Opposing Lefts	Critical Lane Volume	*
NBT	2039	1.00	0.30	612	0	612	
SBR + NBL	778	1.00	1.00	778	127	905	*
WBR	394	1.00	1.00	394	0	394	*
					Critical Volume	1299	OK
					V/C	0.84	

Movement	Volume	PCE	Lane Use Factor	Lane Volume	Opposing Lefts	Critical Lane Volume	*
NBT	2960	1.00	0.30	888	0	888	
SBT + NBL	2663	1.00	0.25	666	410	1076	*
WBR	327	1.00	1.00	327	0	327	*
					Critical Volume	1403	OK
					V/C	0.91	

Maryland State Highway Administration
Turning Movement Summary and Level of Service

Count Date:
Conditions: Future SATURDAY
Design Year: 2022

Location: Old Georgetown @ 270 NB Ramp
Computed By: LL
Date: 3/27/14

Montgomery County Method

Morning Peak Hour 7:15-8:15 am

Lane Configuration

Evening Peak Hour 5:00-6:00 pm

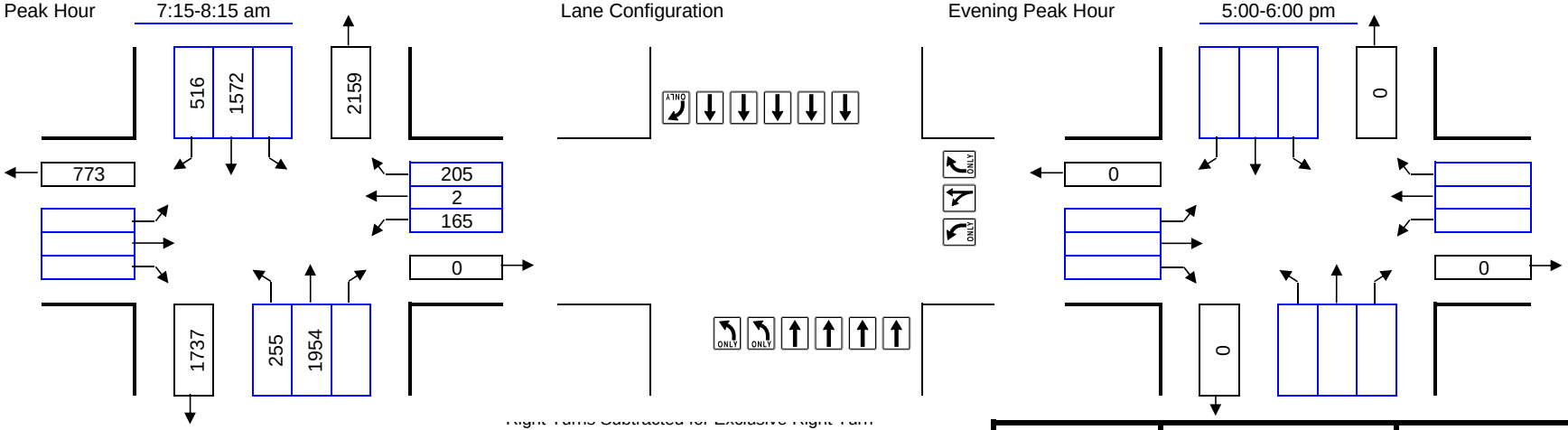

Right Turns Subtracted for Exclusive Right Turn Overlap Phasing or Right Turn on Red and Free Rights:

	AM	PM
NB Approach:	NB	NB
SB Approach:	SB	SB
EB Approach:	EB	EB
WB Approach:	WB	WB

Number of Lanes	Lane Use Factor		Opposing Volume (vph)		PCE
1 =	1.00	Congestion Standard	≤	199	1.1
2 =	0.53	= 1550	≤	599	2.0
3 =	0.37	for	≤	799	3.0
4 =	0.30	North Bethesda	≤	999	4.0
Dbl-left	0.60	Policy	≥	1000	5.0
		Area			

Movement	Volume	PCE	Lane Use Factor	Lane Volume	Opposing Lefts	Critical Lane Volume	*
NBT	1954	1.00	0.30	586	0	586	
SBR + NBL	516	1.00	1.00	516	153	669	*
WBR	205	1.00	1.00	205	0	205	*
					Critical Volume	874	OK
						V/C	0.56

Movement	Volume	PCE	Lane Use Factor	Lane Volume	Opposing Lefts	Critical Lane Volume	*
					Critical Volume	0	OK
						V/C	0.00

Maryland State Highway Administration
Turning Movement Summary and
Level of Service

Count Date:
Conditions: Future
Design Year: 2022

Location: Old Georgetown @ 270 SB Ramp
Computed By: BJM
Date: 3/27/14

Montgomery County Method

Morning Peak Hour 7:15-8:15 am

Lane Configuration

Evening Peak Hour 5:00-6:00 pm

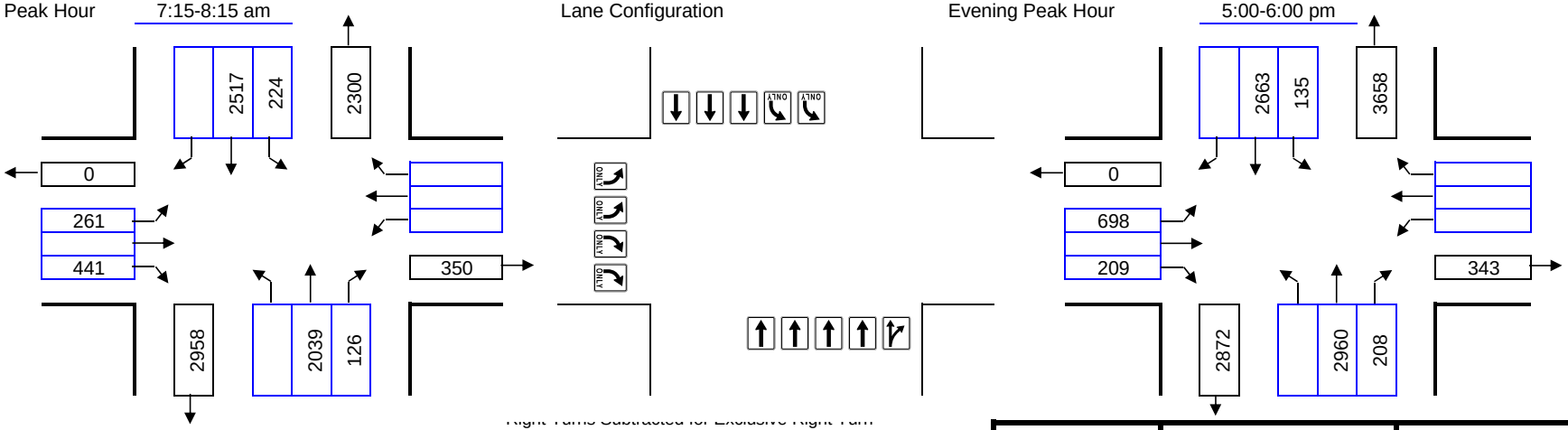

Right Turns Subtracted for Exclusive Right Turn Overlap Phasing or Right Turn on Red and Free Rights:

	AM	PM
NB Approach:	NB	NB
SB Approach:	SB	SB
EB Approach:	EB	EB
WB Approach:	WB	WB

Number of Lanes	Lane Use Factor		Opposing Volume (vph)		PCE
1 =	1.00	Congestion Standard	≤	199	1.1
2 =	0.53	= 1550	≤	599	2.0
3 =	0.37	for	≤	799	3.0
4 =	0.30	North Bethesda	≤	999	4.0
Dbl-left	0.60	Policy	≥	1000	5.0
		Area			

Movement	Volume	PCE	Lane Use Factor	Lane Volume	Opposing Lefts	Critical Lane Volume	*
NBTR + SBL	2165	1.00	0.25	541	134	675	
SBT	2517	1.00	0.37	931	0	931	*
EBR	441	1.00	0.53	234	0	234	*
					Critical Volume	1165	OK
						V/C	0.75

Movement	Volume	PCE	Lane Use Factor	Lane Volume	Opposing Lefts	Critical Lane Volume	*
NBTR + SBL	3168	1.00	0.25	792	81	873	
SBT	2663	1.00	0.37	985	0	985	*
EBL	698	1.00	0.60	419	0	419	*
					Critical Volume	1404	OK
						V/C	0.91

Maryland State Highway Administration
Turning Movement Summary and
Level of Service

Count Date:
Conditions: Future SATURDAY
Design Year: 2022

Location: Old Georgetown @ 270 SB Ramp
Computed By: LL
Date: 3/27/14

Montgomery County Method

Morning Peak Hour 7:15-8:15 am

Lane Configuration

Evening Peak Hour 5:00-6:00 pm

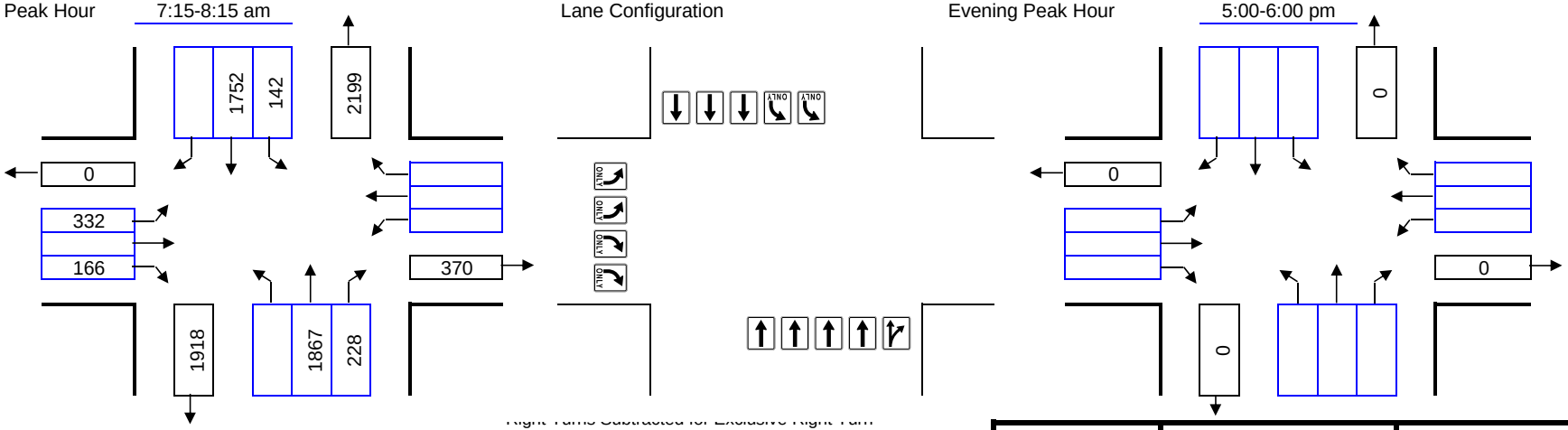

Right Turns Subtracted for Exclusive Right Turn Overlap Phasing or Right Turn on Red and Free Rights:

	AM	PM
NB Approach:	NB	NB
SB Approach:	SB	SB
EB Approach:	EB	EB
WB Approach:	WB	WB

Number of Lanes	Lane Use Factor		Opposing Volume (vph)		PCE
1 =	1.00	Congestion Standard	≤	199	1.1
2 =	0.53	= 1550	≤	599	2.0
3 =	0.37	for	≤	799	3.0
4 =	0.30	North Bethesda	≤	999	4.0
Dbl-left	0.60	Policy	≥	1000	5.0
		Area			

Movement	Volume	PCE	Lane Use Factor	Lane Volume	Opposing Lefts	Critical Lane Volume	*
NBTR + SBL	2095	1.00	0.25	524	85	609	
SBT	1752	1.00	0.37	648	0	648	*
EBL	332	1.00	0.60	199	0	199	*
					Critical Volume	847	OK
						V/C	0.55

Movement	Volume	PCE	Lane Use Factor	Lane Volume	Opposing Lefts	Critical Lane Volume	*
					Critical Volume	0	OK
						V/C	0.00

Maryland State Highway Administration
Turning Movement Summary and
Level of Service

Count Date:
Conditions: Future
Design Year: 2022

Location: Hoya @ Midpike
Computed By: BJM
Date: 4/4/14

Montgomery County Method

Morning Peak Hour 7:15-8:15 am

Lane Configuration

Evening Peak Hour 5:00-6:00 pm

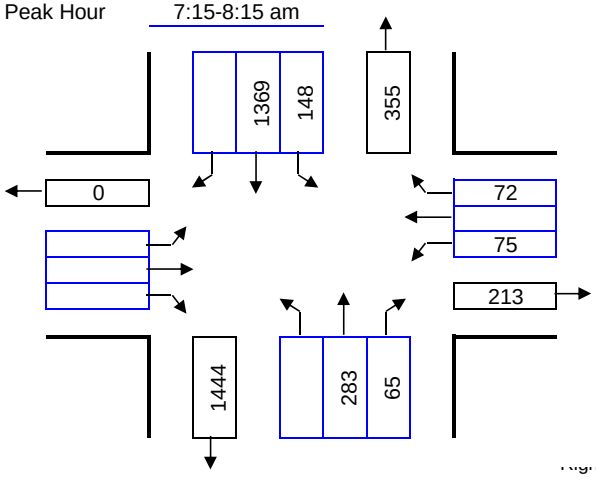

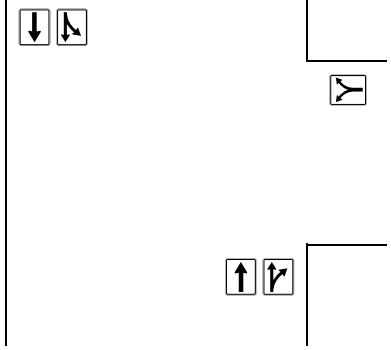

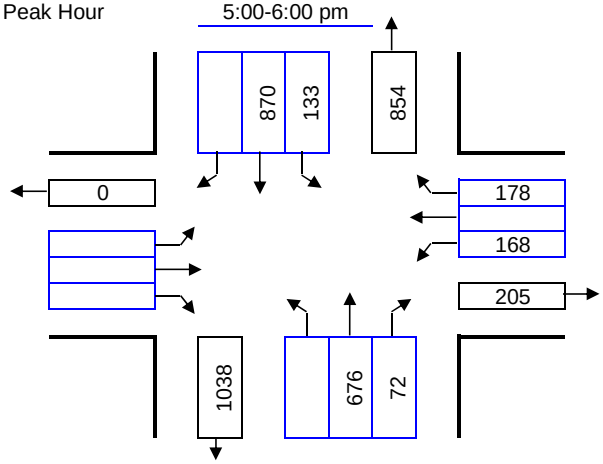

Right Turns Subtracted for Exclusive Right Turn Overlap Phasing or Right Turn on Red and Free Rights:

	AM	PM
NB Approach:	NB	NB
SB Approach:	SB	SB
EB Approach:	EB	EB
WB Approach:	WB	WB

Number of Lanes	Lane Use Factor		Opposing Volume (vph)		PCE
1 =	1.00	Congestion Standard	≤	199	1.1
2 =	0.53	= 1800	≤	599	2.0
3 =	0.37	for	≤	799	3.0
4 =	0.30	White Flint	≤	999	4.0
Dbl-left	0.60	Policy	≥	1000	5.0
		Area			

Movement	Volume	PCE	Lane Use Factor	Lane Volume	Opposing Lefts	Critical Lane Volume	*
NBTR + SBL	348	1.00	0.53	184	148	332	
SBLT	1517	1.00	0.53	804	0	804	*
WBLR	147	1.00	1.00	147	0	147	*
					Critical Volume	951	OK
					V/C	0.53	

Movement	Volume	PCE	Lane Use Factor	Lane Volume	Opposing Lefts	Critical Lane Volume	*
NBTR + SBL	748	1.00	0.53	396	133	529	
SBLT	1003	1.00	0.53	532	0	532	*
WBLR	346	1.00	1.00	346	0	346	*
					Critical Volume	878	OK
					V/C	0.49	

Maryland State Highway Administration
Turning Movement Summary and
Level of Service

Count Date:
Conditions: Future SATURDAY
Design Year: 2022

Location: Hoya @ Midpike
Computed By: LL
Date: 4/4/14

Montgomery County Method

Morning Peak Hour 7:15-8:15 am

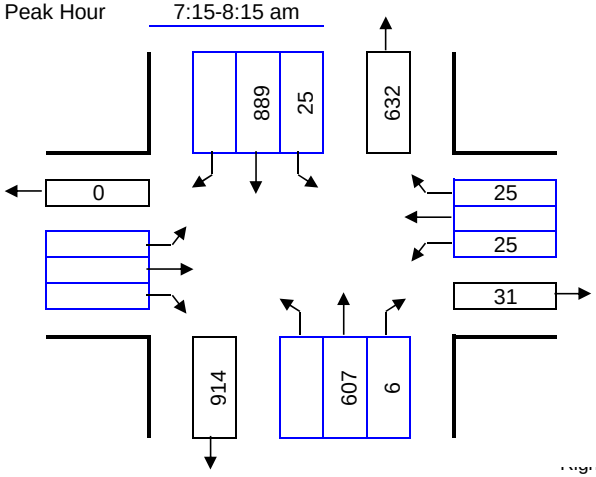

Lane Configuration

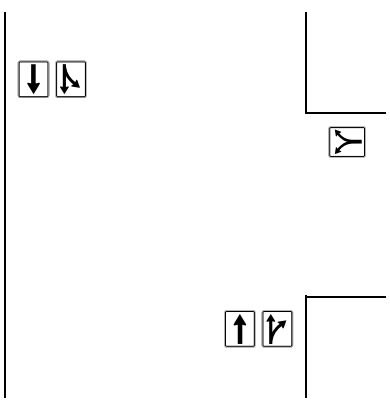

Evening Peak Hour 5:00-6:00 pm

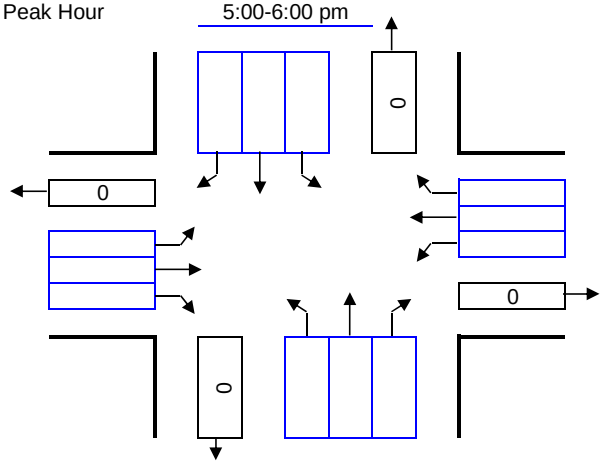

Right Turns Subtracted for Exclusive Right Turn Overlap Phasing or Right Turn on Red and Free Rights:

	AM	PM
NB Approach:	NB	NB
SB Approach:	SB	SB
EB Approach:	EB	EB
WB Approach:	WB	WB

Number of Lanes	Lane Use Factor		Opposing Volume (vph)		PCE
1 =	1.00	Congestion Standard	≤	199	1.1
2 =	0.53	= 1800	≤	599	2.0
3 =	0.37	for	≤	799	3.0
4 =	0.30	White Flint	≤	999	4.0
Dbl-left	0.60	Policy Area	≥	1000	5.0

Movement	Volume	PCE	Lane Use Factor	Lane Volume	Opposing Lefts	Critical Lane Volume	*
NBTR + SBL	613	1.00	0.53	325	25	350	
SBLT	914	1.00	0.53	484	0	484	*
WBLR	50	1.00	1.00	50	0	50	*
					Critical Volume	534	OK
					V/C	0.30	

Movement	Volume	PCE	Lane Use Factor	Lane Volume	Opposing Lefts	Critical Lane Volume	*
					Critical Volume	0	OK
					V/C	0.00	

Maryland State Highway Administration
Turning Movement Summary and Level of Service

Count Date:
Conditions: Future
Design Year: 2022

Location: MD 355 @ Mid Pike
Computed By: BJM
Date: 3/27/14

Montgomery County Method

Morning Peak Hour 7:15-8:15 am

Lane Configuration

Evening Peak Hour 5:00-6:00 pm

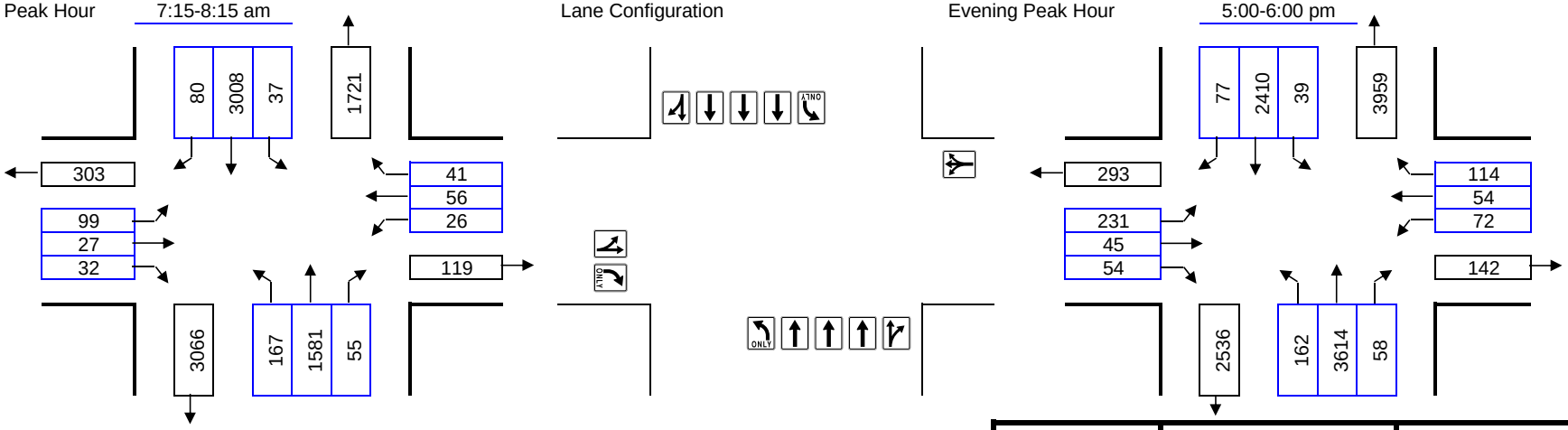

Right Turns Subtracted for Exclusive Right Turn Overlap Phasing or Right Turn on Red:

	AM	PM
NB Approach:	NB	NB
SB Approach:	SB	SB
EB Approach:	EB	EB
WB Approach:	WB	WB

Number of Lanes	Lane Use Factor		Opposing Volume (vph)		PCE
1 =	1.00	Congestion Standard	≤	199	1.1
2 =	0.53	= 1800	≤	599	2.0
3 =	0.37	for	≤	799	3.0
4 =	0.30	White Flint	≤	999	4.0
Dbl-left	0.60	Policy	≥	1000	5.0
		Area			

Movement	Volume	PCE	Lane Use Factor	Lane Volume	Opposing Lefts	Critical Lane Volume	*
NBTR + SBL	1636	1.00	0.30	491	37	528	
SBTR + NBL	3088	1.00	0.30	926	167	1093	*
EBLT + WBL	126	1.00	1.00	126	26	152	
WBLTR + EBL	123	1.00	1.00	123	99	222	*
					Critical Volume	1315	OK
					V/C	0.73	

Movement	Volume	PCE	Lane Use Factor	Lane Volume	Opposing Lefts	Critical Lane Volume	*
NBTR + SBL	3672	1.00	0.30	1102	39	1141	*
SBTR + NBL	2487	1.00	0.30	746	162	908	
EBLT + WBL	276	1.00	1.00	276	72	348	
WBLTR + EBL	240	1.00	1.00	240	231	471	*
					Critical Volume	1612	OK
					V/C	0.90	

Maryland State Highway Administration
Turning Movement Summary and
Level of Service

Count Date:
Conditions: Future SATURDAY
Design Year: 2022

Location: MD 355 @ Mid Pike
Computed By: LL
Date: 3/27/14

Montgomery County Method

Morning Peak Hour 7:15-8:15 am

Lane Configuration

Evening Peak Hour 5:00-6:00 pm

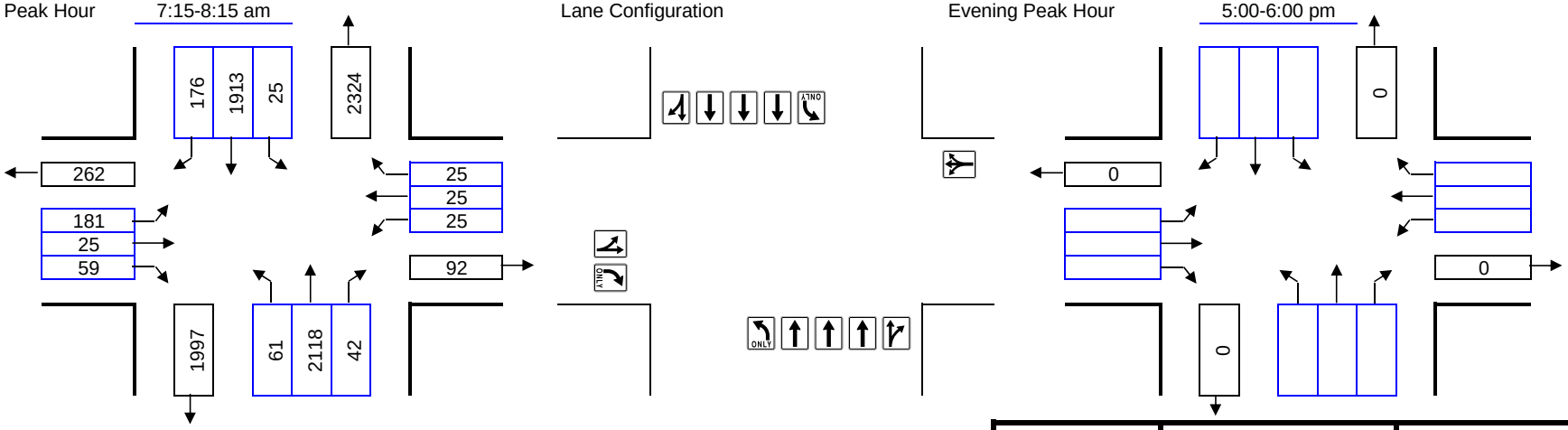

Right Turns Subtracted for Exclusive Right Turn Overlap Phasing or Right Turn on Red:

	AM	PM
NB Approach:	NB	NB
SB Approach:	SB	SB
EB Approach:	EB	EB
WB Approach:	WB	WB

Number of Lanes	Lane Use Factor		Opposing Volume (vph)		PCE
1 =	1.00	Congestion Standard	≤	199	1.1
2 =	0.53	= 1800	≤	599	2.0
3 =	0.37	for	≤	799	3.0
4 =	0.30	White Flint	≤	999	4.0
Dbl-left	0.60	Policy	≥	1000	5.0
		Area			

Movement	Volume	PCE	Lane Use Factor	Lane Volume	Opposing Lefts	Critical Lane Volume	*
NBTR + SBL	2160	1.00	0.30	648	25	673	
SBTR + NBL	2089	1.00	0.30	627	61	688	*
EBLT + WBL	206	1.00	1.00	206	25	231	
WBLTR + EBL	75	1.00	1.00	75	181	256	*
					Critical Volume	944	OK
					V/C	0.52	

Movement	Volume	PCE	Lane Use Factor	Lane Volume	Opposing Lefts	Critical Lane Volume	*
					Critical Volume	0	OK
					V/C	0.00	

Maryland State Highway Administration
Turning Movement Summary and
Level of Service

Count Date:
Conditions: Future - Volume Update
Design Year: 2022

Location: Old Georgetown @ Main Street/Market Street
Computed By: BJM
Date: 3/27/14

Montgomery County Method

Morning Peak Hour 7:15-8:15 am

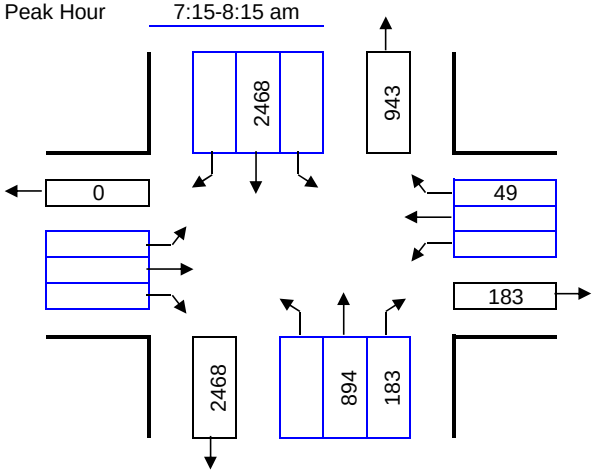

Lane Configuration

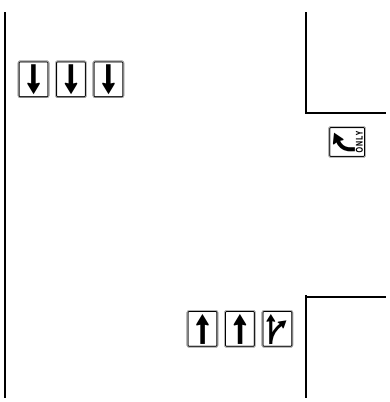

Evening Peak Hour 5:00-6:00 pm

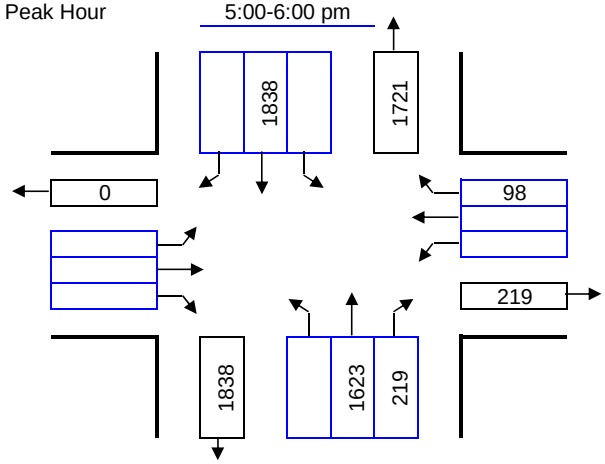

Right Turns Subtracted for Exclusive Right Turn Overlap Phasing or Right Turn on Red:

	AM	PM
NB Approach:	NB	NB
SB Approach:	SB	SB
EB Approach:	EB	EB
WB Approach:	WB	WB

Number of Lanes	Lane Use Factor		Opposing Volume (vph)		PCE
1 =	1.00	Congestion Standard	≤	199	1.1
2 =	0.53	= 1800	≤	599	2.0
3 =	0.37	for	≤	799	3.0
4 =	0.30	White Flint	≤	999	4.0
Dbl-left	0.60	Policy	≥	1000	5.0
		Area			

Movement	Volume	PCE	Lane Use Factor	Lane Volume	Opposing Lefts	Critical Lane Volume	*
NBTR	1077	1.00	0.37	398	0	398	
SBT	2468	1.00	0.37	913	0	913	*
WBR	49	1.00	1.00	49	0	49	*
					Critical Volume	962	OK
					V/C	0.53	

Movement	Volume	PCE	Lane Use Factor	Lane Volume	Opposing Lefts	Critical Lane Volume	*
NBTR	1842	1.00	0.37	682	0	682	*
SBT	1838	1.00	0.37	680	0	680	
WBR	98	1.00	1.00	98	0	98	*
					Critical Volume	780	OK
					V/C	0.43	

Maryland State Highway Administration
Turning Movement Summary and
Level of Service

Count Date:
Conditions: Future
Design Year: 2022

Location: Old Georgetown @ Main Street/Market Street - Saturday

Computed By: LL Date: 3/27/14

Montgomery County Method

Morning Peak Hour 11:30 am-12:30 pm

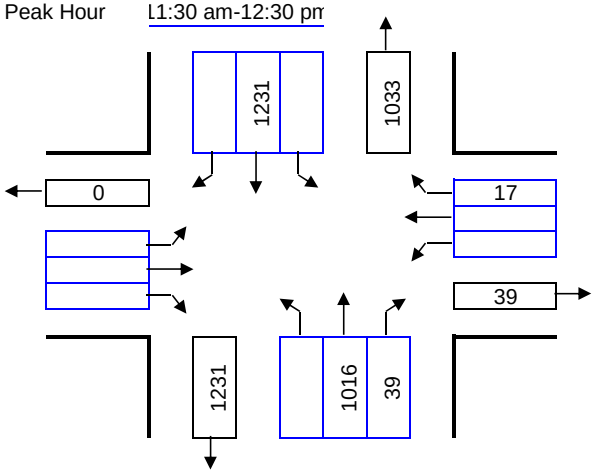

Lane Configuration

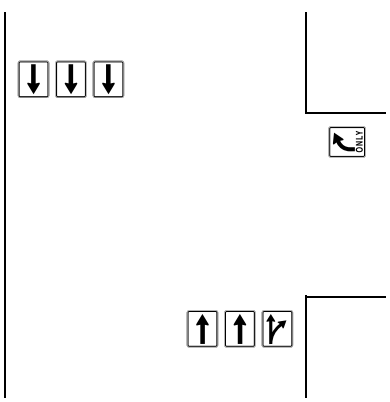

Evening Peak Hour 5:00-6:00 pm

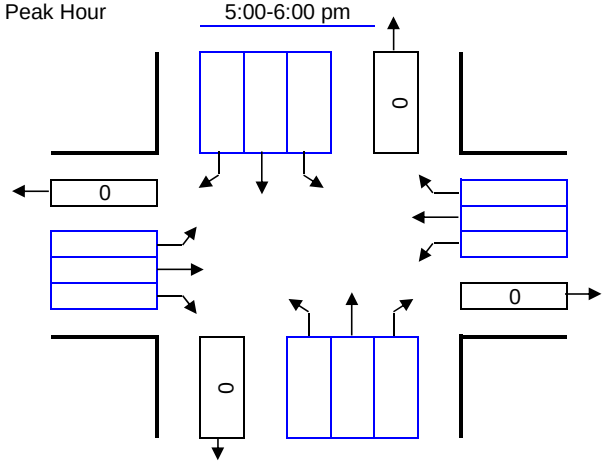

Right Turns Subtracted for Exclusive Right Turn Overlap Phasing or Right Turn on Red:

	AM	PM
NB Approach:	NB	NB
SB Approach:	SB	SB
EB Approach:	EB	EB
WB Approach:	WB	WB

Number of Lanes	Lane Use Factor		Opposing Volume (vph)		PCE
1 =	1.00	Congestion Standard	≤	199	1.1
2 =	0.53	= 1800	≤	599	2.0
3 =	0.37	for	≤	799	3.0
4 =	0.30	White Flint	≤	999	4.0
Dbl-left	0.60	Policy	≥	1000	5.0
		Area			

Movement	Volume	PCE	Lane Use Factor	Lane Volume	Opposing Lefts	Critical Lane Volume	*
NBTR	1055	1.00	0.37	390	0	390	
SBT	1231	1.00	0.37	455	0	455	*
WBR	17	1.00	1.00	17	0	17	*
					Critical Volume	472	OK
						V/C	0.26

Movement	Volume	PCE	Lane Use Factor	Lane Volume	Opposing Lefts	Critical Lane Volume	*
					Critical Volume	0	OK
						V/C	0.00

Maryland State Highway Administration
Turning Movement Summary and
Level of Service

Count Date:
Conditions: Future
Design Year: 2022

Location: MD 355 @ Main Street/Market Street
Computed By: BJM
Date: 4/4/14

Montgomery County Method

Morning Peak Hour 7:15-8:15 am

Lane Configuration

Evening Peak Hour 5:00-6:00 pm

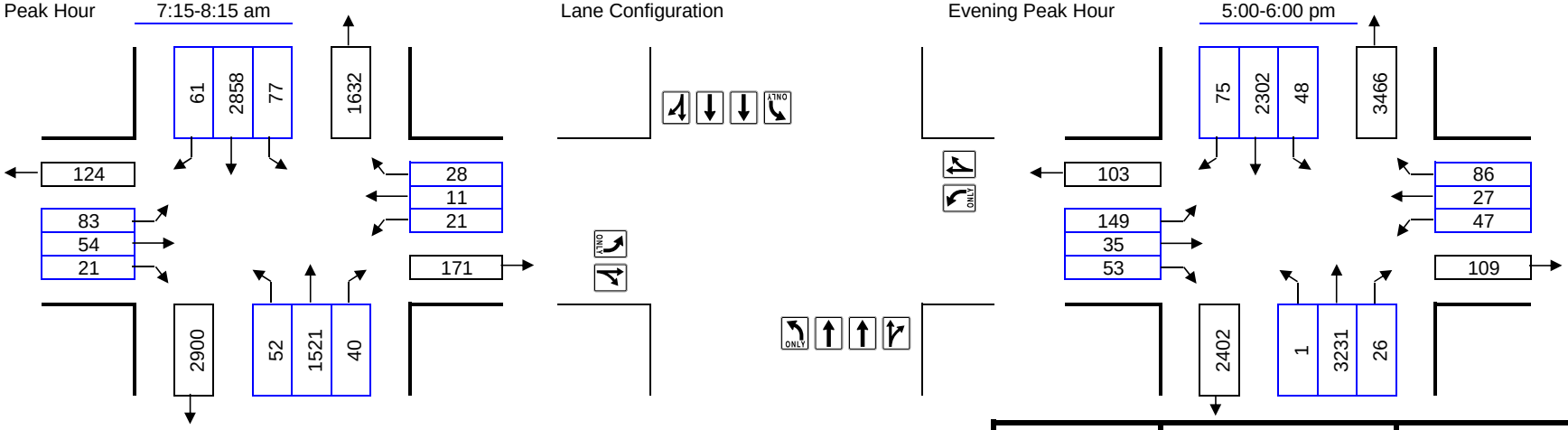

Right Turns Subtracted for Exclusive Right Turn Overlap Phasing or Right Turn on Red:

	AM	PM
NB Approach:	NB	NB
SB Approach:	SB	SB
EB Approach:	EB	EB
WB Approach:	WB	WB

Number of Lanes	Lane Use Factor		Opposing Volume (vph)		PCE
1 =	1.00	Congestion Standard	≤	199	1.1
2 =	0.53	= 1800	≤	599	2.0
3 =	0.37	for	≤	799	3.0
4 =	0.30	White Flint	≤	999	4.0
Dbl-left	0.60	Policy	≥	1000	5.0
		Area			

Movement	Volume	PCE	Lane Use Factor	Lane Volume	Opposing Lefts	Critical Lane Volume	*
NBTR + SBL	1561	1.00	0.37	578	77	655	
SBTR + NBL	2919	1.00	0.37	1080	52	1132	*
EBTR + WBL	75	1.00	1.00	75	21	96	
WBTR + EBL	39	1.00	1.00	39	83	122	*
					Critical Volume	1254	OK
					V/C	0.70	

Movement	Volume	PCE	Lane Use Factor	Lane Volume	Opposing Lefts	Critical Lane Volume	*
NBTR + SBL	3257	1.00	0.37	1205	48	1253	*
SBTR + NBL	2377	1.00	0.37	879	1	880	
EBTR + WBL	88	1.00	1.00	88	47	135	
WBTR + EBL	113	1.00	1.00	113	149	262	*
					Critical Volume	1515	OK
					V/C	0.84	

Maryland State Highway Administration
Turning Movement Summary and
Level of Service

Count Date:
Conditions: Future Saturday
Design Year: 2022

Location: MD 355 @ Main Street/Market Street
Computed By: LL
Date: 4/4/14

Montgomery County Method

Saturday 7:00-8:00 am

Lane Configuration

Evening Peak Hour 5:00-6:00 pm

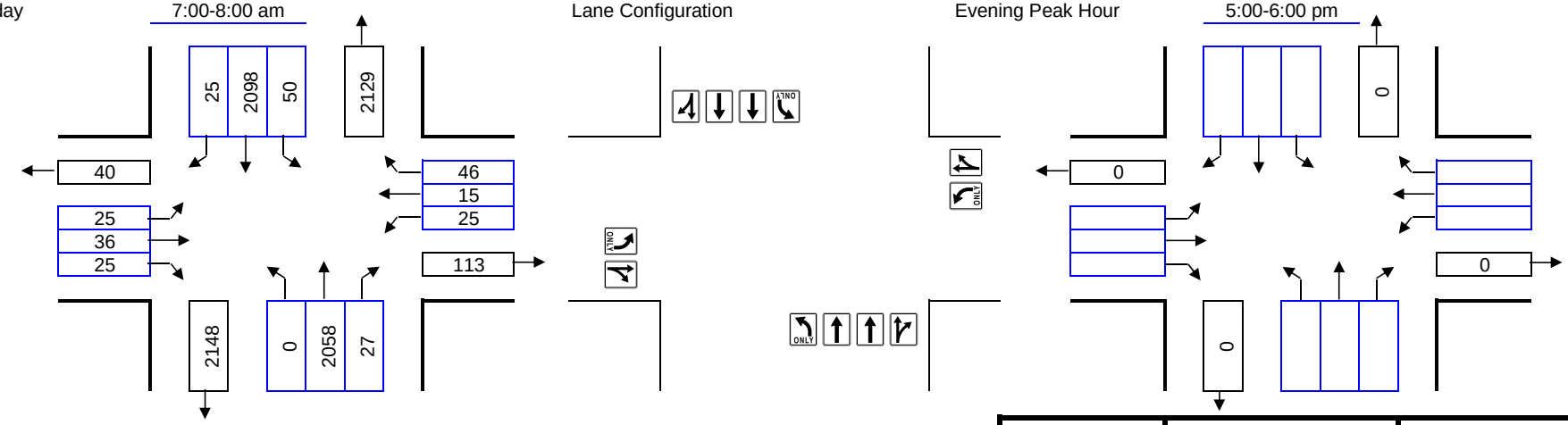

Right Turns Subtracted for Exclusive Right Turn Overlap Phasing or Right Turn on Red:

	AM	PM
NB Approach:	NB	NB
SB Approach:	SB	SB
EB Approach:	EB	EB
WB Approach:	WB	WB

Number of Lanes	Lane Use Factor		Opposing Volume (vph)		PCE
1 =	1.00	Congestion Standard	≤	199	1.1
2 =	0.53	= 1800	≤	599	2.0
3 =	0.37	for	≤	799	3.0
4 =	0.30	White Flint	≤	999	4.0
Dbl-left	0.60	Policy	≥	1000	5.0
		Area			

Movement	Volume	PCE	Lane Use Factor	Lane Volume	Opposing Lefts	Critical Lane Volume	*
NBTR + SBL	2085	1.00	0.37	771	50	821	*
SBTR	2123	1.00	0.37	786	0	786	
EBTR + WBL	61	1.00	1.00	61	25	86	*
WBTR + EBL	61	1.00	1.00	61	25	86	
					Critical Volume	907	OK
					V/C	0.50	

Movement	Volume	PCE	Lane Use Factor	Lane Volume	Opposing Lefts	Critical Lane Volume	*
					Critical Volume	0	OK
					V/C	0.00	

Maryland State Highway Administration
Turning Movement Summary and
Level of Service

Count Date:
Conditions: Future.
Design Year: 2022

Location: Marinelli @ Citadel
Computed By: BJM
Date: 3/28/14

Montgomery County Method

Morning Peak Hour 7:15-8:15 am

Lane Configuration

Evening Peak Hour 5:00-6:00 pm

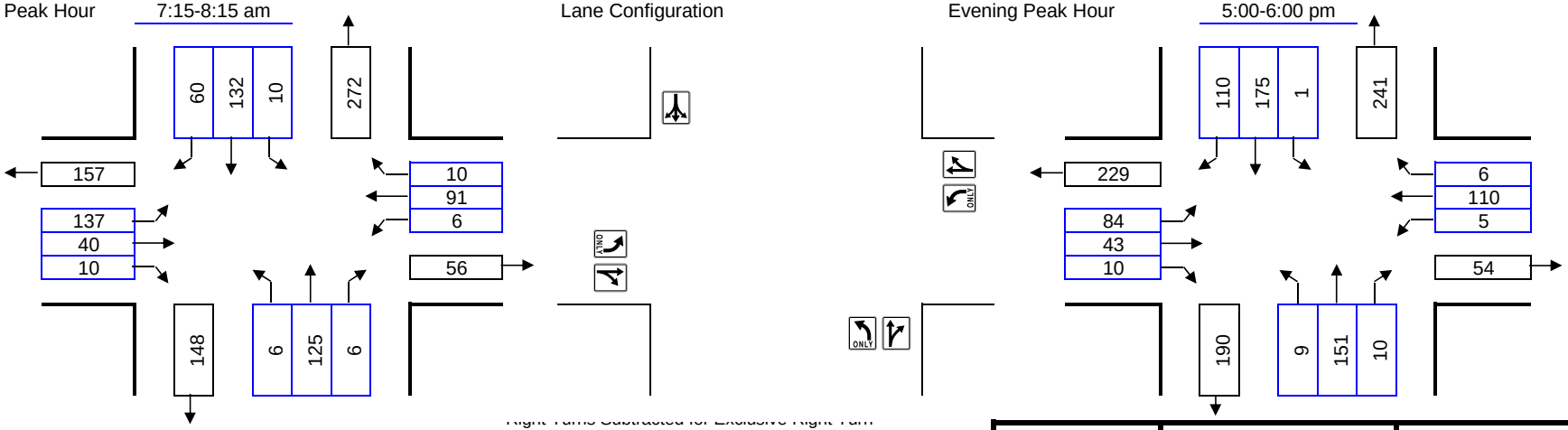

Right Turns Subtracted for Exclusive Right Turn Overlap Phasing or Right Turn on Red and Free Rights:

NB Approach:	AM	NB	PM	NB
SB Approach:		SB		SB
EB Approach:		EB		EB
WB Approach:		WB		WB

Number of Lanes	Lane Use Factor		Opposing Volume (vph)		PCE
1 =	1.00	Congestion Standard	≤	199	1.1
2 =	0.53	= 1800	≤	599	2.0
3 =	0.37	for	≤	799	3.0
4 =	0.30	White Flint	≤	999	4.0
Dbl-left	0.60	Policy	≥	1000	5.0
		Area			

Movement	Volume	PCE	Lane Use Factor	Lane Volume	Opposing Lefts	Critical Lane Volume	*
NBTR + SBL	131	1.00	1.00	131	10	141	
SBLTR + NBL	202	1.00	1.00	202	6	208	*
EBTR + WBL	50	1.00	1.00	50	6	56	
WBTR + EBL	101	1.00	1.00	101	137	238	*
					Critical Volume	446	OK
					V/C	0.25	

Movement	Volume	PCE	Lane Use Factor	Lane Volume	Opposing Lefts	Critical Lane Volume	*
NBTR + SBL	161	1.00	1.00	161	1	162	
SBLTR + NBL	286	1.00	1.00	286	9	295	*
EBTR + WBL	53	1.00	1.00	53	5	58	
WBTR + EBL	116	1.00	1.00	116	84	200	*
					Critical Volume	495	OK
					V/C	0.28	

Maryland State Highway Administration
Turning Movement Summary and
Level of Service

Count Date:
Conditions: Future SATURDAY
Design Year: 2022

Location: Marinelli @ Citadel
Computed By: LL
Date: 3/28/14

Montgomery County Method

Morning Peak Hour 7:15-8:15 am

Lane Configuration

Evening Peak Hour 5:00-6:00 pm

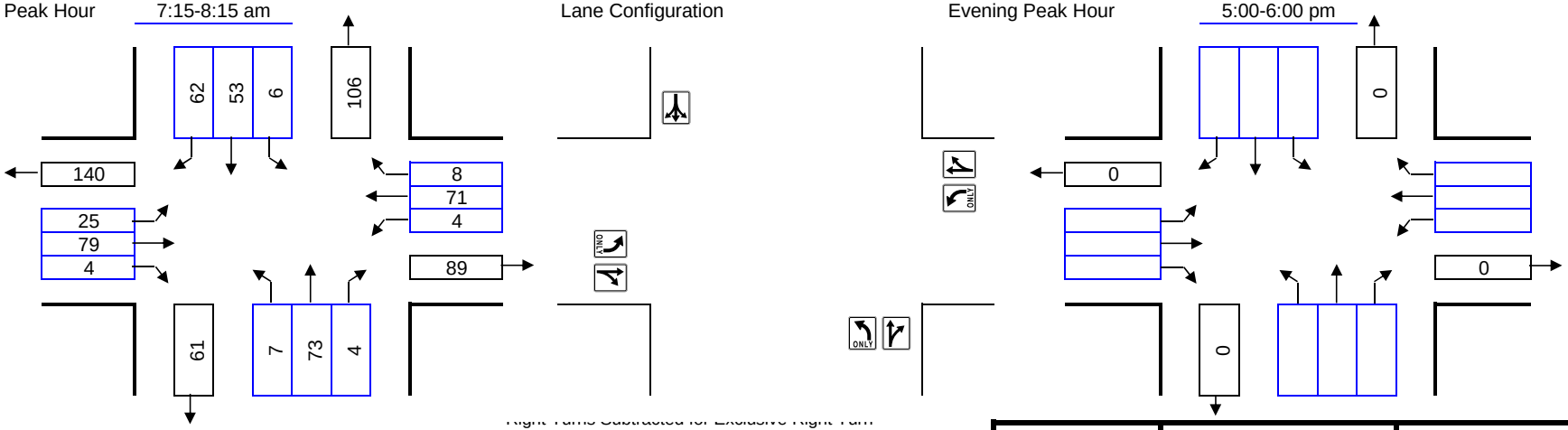

Right Turns Subtracted for Exclusive Right Turn Overlap Phasing or Right Turn on Red and Free Rights:

	AM	PM
NB Approach:	NB	NB
SB Approach:	SB	SB
EB Approach:	EB	EB
WB Approach:	WB	WB

Number of Lanes	Lane Use Factor		Opposing Volume (vph)		PCE
1 =	1.00	Congestion Standard	≤	199	1.1
2 =	0.53	= 1800	≤	599	2.0
3 =	0.37	for	≤	799	3.0
4 =	0.30	White Flint	≤	999	4.0
Dbl-left	0.60	Policy	≥	1000	5.0
		Area			

Movement	Volume	PCE	Lane Use Factor	Lane Volume	Opposing Lefts	Critical Lane Volume	*
NBTR + SBL	77	1.00	1.00	77	6	83	
SBLTR + NBL	121	1.00	1.00	121	7	128	*
EBTR + WBL	83	1.00	1.00	83	4	87	
WBTR + EBL	79	1.00	1.00	79	25	104	*
					Critical Volume	232	OK
					V/C	0.13	

Movement	Volume	PCE	Lane Use Factor	Lane Volume	Opposing Lefts	Critical Lane Volume	*
					Critical Volume	0	OK
					V/C	0.00	

Maryland State Highway Administration
Turning Movement Summary and
Level of Service

Count Date:
Conditions: Future.
Design Year: 2022

Location: Nicholson @ Citadel
Computed By: BJM
Date: 3/28/14

Montgomery County Method

Morning Peak Hour 7:15-8:15 am

Lane Configuration

Evening Peak Hour 5:00-6:00 pm

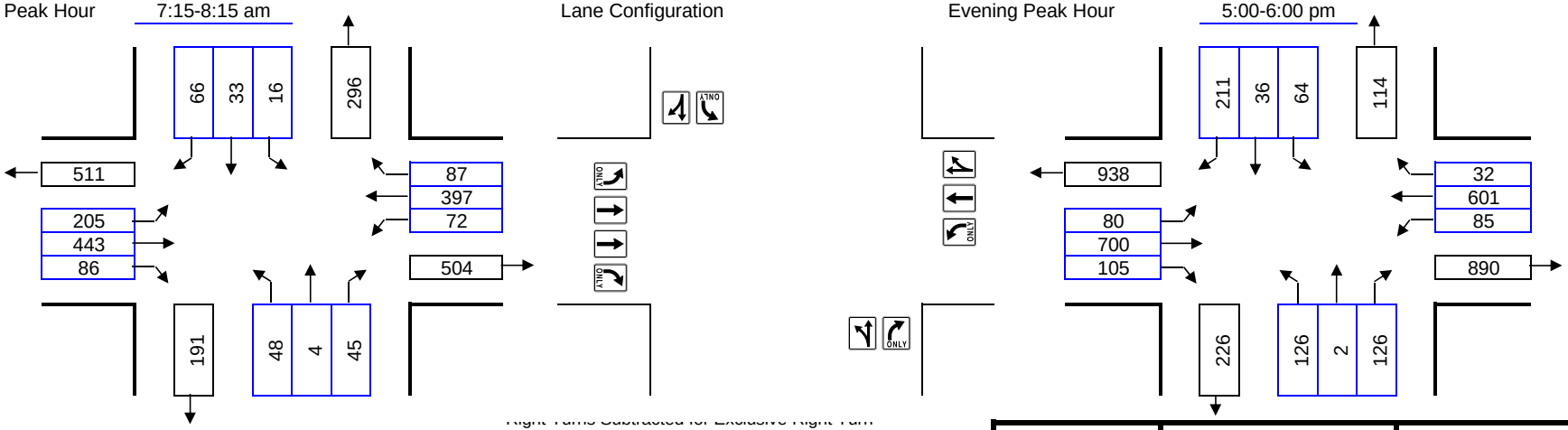

Right Turns Subtracted for Exclusive Right Turn Overlap Phasing or Right Turn on Red and Free Rights:

	AM	PM
NB Approach:	NB	NB
SB Approach:	SB	SB
EB Approach:	EB	EB
WB Approach:	WB	WB

Number of Lanes	Lane Use Factor		Opposing Volume (vph)		PCE
1 =	1.00	Congestion Standard	≤	199	1.1
2 =	0.53	= 1800	≤	599	2.0
3 =	0.37	for	≤	799	3.0
4 =	0.30	White Flint	≤	999	4.0
Dbl-left	0.60	Policy Area	≥	1000	5.0

Movement	Volume	PCE	Lane Use Factor	Lane Volume	Opposing Lefts	Critical Lane Volume	*
NBLT + SBL	52	1.00	1.00	52	16	68	
SBTR + NBL	99	1.00	1.00	99	48	147	*
EBT + WBL	443	1.00	0.53	235	72	307	
WBTR + EBL	484	1.00	0.53	257	205	462	*
					Critical Volume	609	OK
					V/C	0.34	

Movement	Volume	PCE	Lane Use Factor	Lane Volume	Opposing Lefts	Critical Lane Volume	*
NBLT + SBL	128	1.00	1.00	128	64	192	
SBTR + NBL	247	1.00	1.00	247	126	373	*
EBT + WBL	700	1.00	0.53	371	85	456	*
WBTR + EBL	633	1.00	0.53	335	80	415	
					Critical Volume	829	OK
					V/C	0.46	

Maryland State Highway Administration
Turning Movement Summary and
Level of Service

Count Date:
Conditions: Future SATURDAY
Design Year: 2022

Location: Nicholson @ Citadel
Computed By: LL
Date: 3/28/14

Montgomery County Method

Morning Peak Hour 7:15-8:15 am

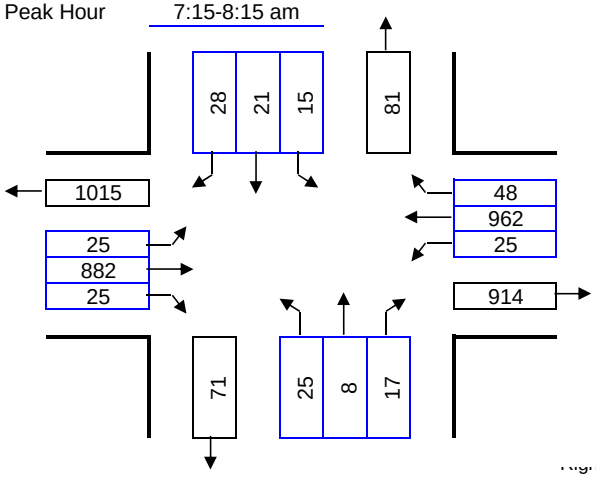

Lane Configuration

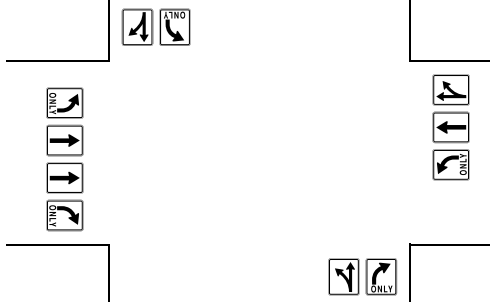

Evening Peak Hour 5:00-6:00 pm

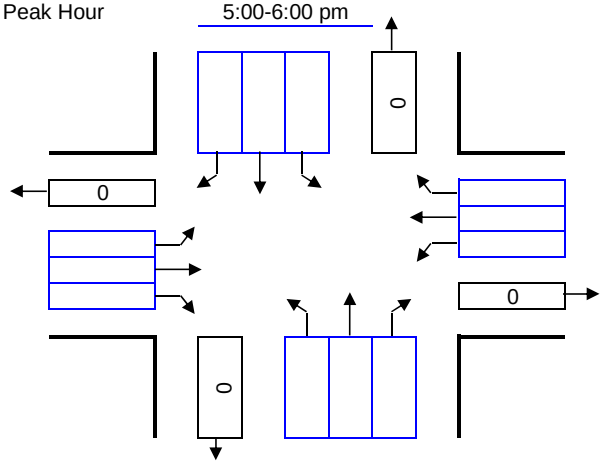

Right Turns Subtracted for Exclusive Right Turn Overlap Phasing or Right Turn on Red and Free Rights:

	AM	PM
NB Approach:	NB	NB
SB Approach:	SB	SB
EB Approach:	EB	EB
WB Approach:	WB	WB

Number of Lanes	Lane Use Factor		Opposing Volume (vph)		PCE
1 =	1.00	Congestion Standard	≤	199	1.1
2 =	0.53	= 1800	≤	599	2.0
3 =	0.37	for	≤	799	3.0
4 =	0.30	White Flint	≤	999	4.0
Dbl-left	0.60	Policy Area	≥	1000	5.0

Movement	Volume	PCE	Lane Use Factor	Lane Volume	Opposing Lefts	Critical Lane Volume	*
NBLT + SBL	33	1.00	1.00	33	15	48	
SBTR + NBL	49	1.00	1.00	49	25	74	*
EBT + WBL	882	1.00	0.53	467	25	492	
WBTR + EBL	1010	1.00	0.53	535	25	560	*
					Critical Volume	634	OK
					V/C	0.35	

Movement	Volume	PCE	Lane Use Factor	Lane Volume	Opposing Lefts	Critical Lane Volume	*
					Critical Volume	0	OK
					V/C	0.00	

Maryland State Highway Administration
Turning Movement Summary and
Level of Service

Count Date:
Conditions: Future
Design Year: 2022

Location: MD 355 @ Executive
Computed By: BJM
Date: 3/28/14

Montgomery County Method

Morning Peak Hour 7:15-8:15 am

Lane Configuration

Evening Peak Hour 5:00-6:00 pm

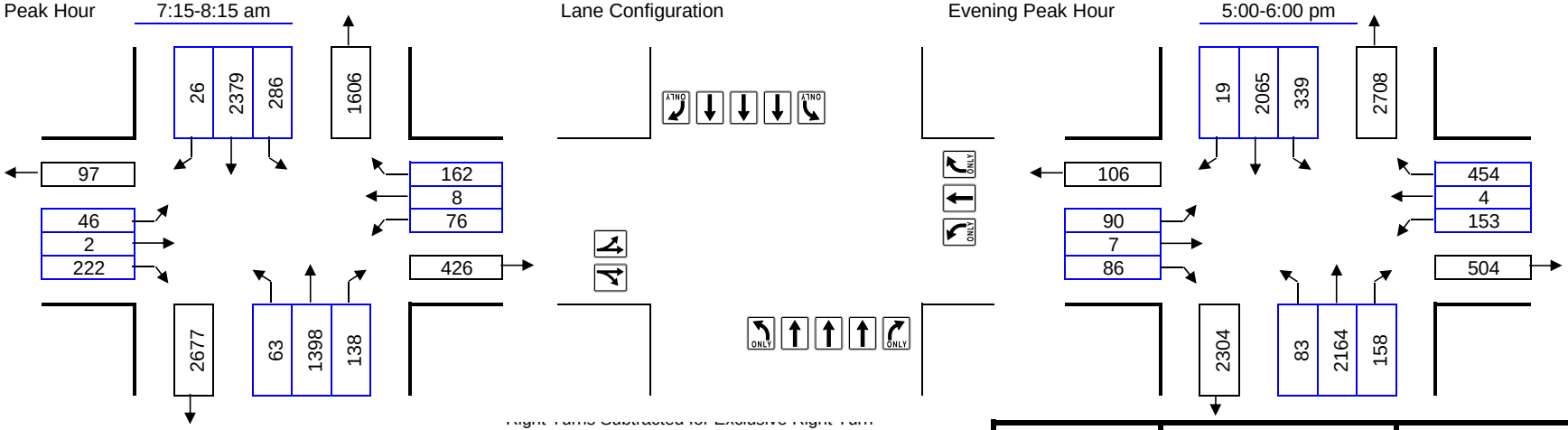

Right Turns Subtracted for Exclusive Right Turn Overlap Phasing or Right Turn on Red and Free Rights:

	AM	PM
NB Approach:	NB	NB
SB Approach:	SB	SB
EB Approach:	EB	EB
WB Approach:	WB	WB

Number of Lanes	Lane Use Factor		Opposing Volume (vph)		PCE
1 =	1.00	Congestion Standard	≤	199	1.1
2 =	0.53	= 1800	≤	599	2.0
3 =	0.37	for	≤	799	3.0
4 =	0.30	White Flint	≤	999	4.0
Dbl-left	0.60	Policy Area	≥	1000	5.0

Movement	Volume	PCE	Lane Use Factor	Lane Volume	Opposing Lefts	Critical Lane Volume	*
NBT + SBL	1398	1.00	0.37	517	286	803	
SBT + NBL	2379	1.00	0.37	880	63	943	*
EBR + WBL	222	1.00	1.00	222	76	298	*
WBR + EBL	162	1.00	1.00	162	46	208	
					Critical Volume	1241	OK
					V/C	0.69	

De facto RT lane(s) assumed for EB approach.

Movement	Volume	PCE	Lane Use Factor	Lane Volume	Opposing Lefts	Critical Lane Volume	*
NBT + SBL	2164	1.00	0.37	801	339	1140	*
SBT + NBL	2065	1.00	0.37	764	83	847	
EBTR + WBL	183	1.00	1.00	183	153	336	
WBR + EBL	454	1.00	1.00	454	90	544	*
					Critical Volume	1684	OK
					V/C	0.94	

De facto LT lane(s) assumed for EB approach.

Maryland State Highway Administration
Turning Movement Summary and
Level of Service

Count Date:
Conditions: Future SATURDAY
Design Year: 2022

Location: MD 355 @ Executive
Computed By: LL
Date: 3/28/14

Montgomery County Method

Morning Peak Hour 7:15-8:15 am

Lane Configuration

Evening Peak Hour 5:00-6:00 pm

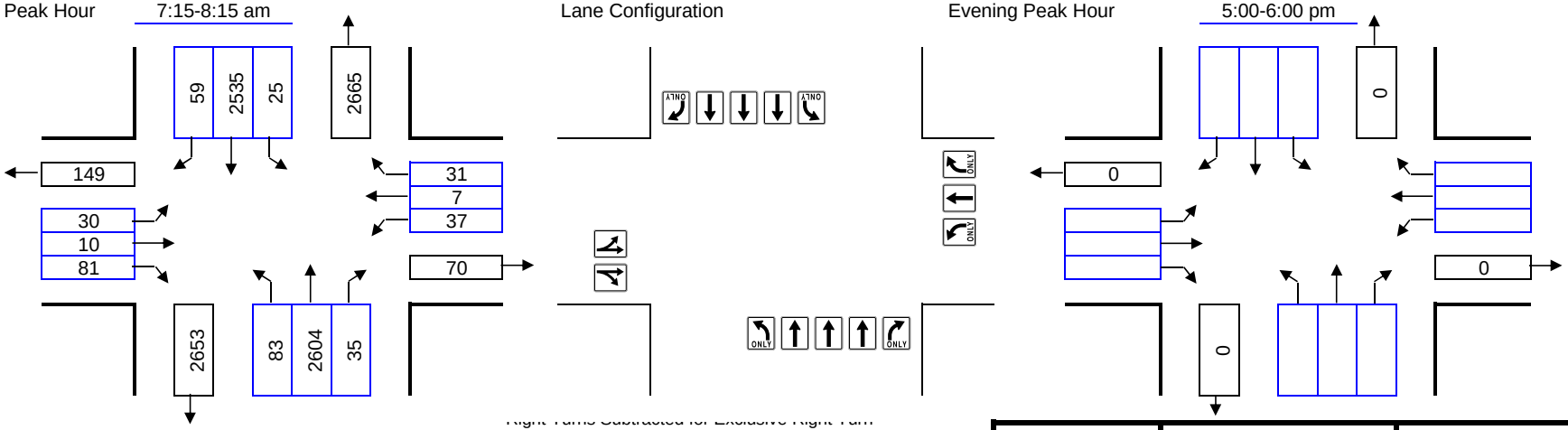

Right Turns Subtracted for Exclusive Right Turn Overlap Phasing or Right Turn on Red and Free Rights:

	AM	PM
NB Approach:	NB	NB
SB Approach:	SB	SB
EB Approach:	EB 34	EB
WB Approach:	WB	WB

Number of Lanes	Lane Use Factor		Opposing Volume (vph)		PCE
1 =	1.00	Congestion Standard	≤	199	1.1
2 =	0.53	= 1800	≤	599	2.0
3 =	0.37	for	≤	799	3.0
4 =	0.30	White Flint	≤	999	4.0
Dbl-left	0.60	Policy Area	≥	1000	5.0

Movement	Volume	PCE	Lane Use Factor	Lane Volume	Opposing Lefts	Critical Lane Volume	*
NBT + SBL	2604	1.00	0.37	963	25	988	
SBT + NBL	2535	1.00	0.37	938	83	1021	*
EBR + WBL	47	1.00	1.00	47	37	84	*
WBR + EBL	31	1.00	1.00	31	30	61	
					Critical Volume	1105	OK
					V/C	0.61	

De facto RT lane(s) assumed for EB approach.

Movement	Volume	PCE	Lane Use Factor	Lane Volume	Opposing Lefts	Critical Lane Volume	*
					Critical Volume	0	OK
					V/C	0.00	

Maryland State Highway Administration
Turning Movement Summary and
Level of Service

Count Date:
Conditions: Future
Design Year: 2022

Location: Montrose Parkway @ Parklawn
Computed By: BJM
Date: 3/4/14

Montgomery County Method

Morning Peak Hour 7:15-8:15 am

Lane Configuration

Evening Peak Hour 5:00-6:00 pm

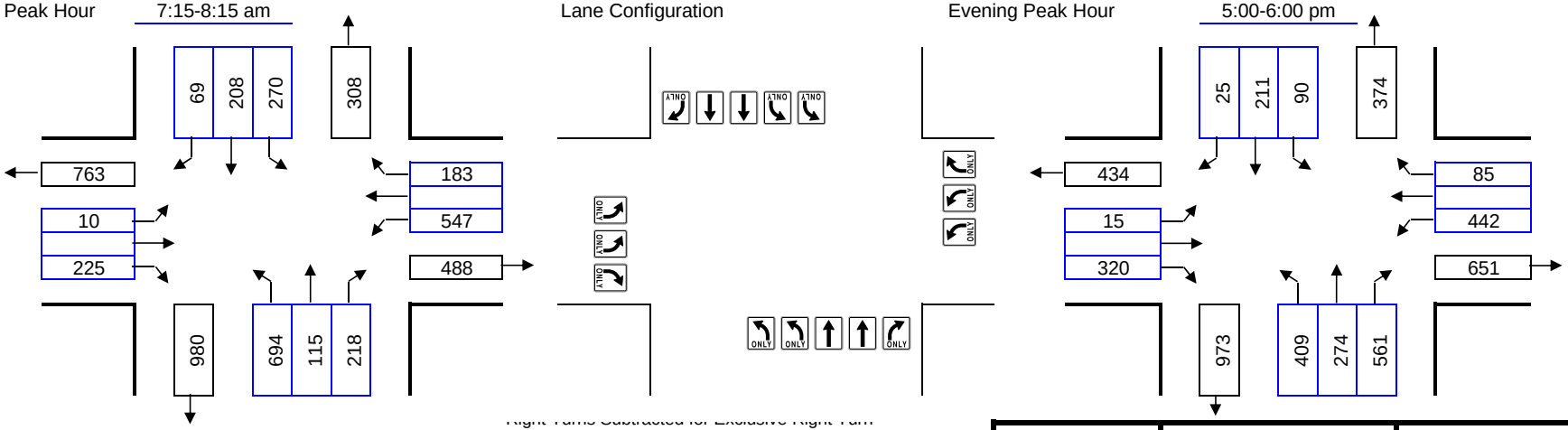

Right Turns Subtracted for Exclusive Right Turn Overlap Phasing or Right Turn on Red and Free Rights:

	AM		PM	
NB Approach:	NB		NB	265
SB Approach:	SB		SB	
EB Approach:	EB	225	EB	245
WB Approach:	WB		WB	

Number of Lanes	Lane Use Factor		Opposing Volume (vph)		PCE
1 =	1.00	Congestion Standard	≤	199	1.1
2 =	0.53	= 1550	≤	599	2.0
3 =	0.37	for	≤	799	3.0
4 =	0.30	North Bethesda	≤	999	4.0
Dbl-left	0.60	Policy	≥	1000	5.0
		Area			

Movement	Volume	PCE	Lane Use Factor	Lane Volume	Opposing Lefts	Critical Lane Volume	*
NBR + SBL	218	1.00	1.00	218	162	380	
SBT + NBL	208	1.00	0.53	110	416	526	*
EB + WBL	0	1.00	0.25	0	328	328	*
WBR + EBL	183	1.00	1.00	183	6	189	
					Critical Volume	854	OK
					V/C	0.55	

Movement	Volume	PCE	Lane Use Factor	Lane Volume	Opposing Lefts	Critical Lane Volume	*
NBR + SBL	296	1.00	1.00	296	54	350	
SBT + NBL	211	1.00	0.53	112	245	357	*
EBR + WBL	75	1.00	1.00	75	265	340	*
WBR + EBL	85	1.00	1.00	85	9	94	
					Critical Volume	697	OK
					V/C	0.45	

Maryland State Highway Administration
Turning Movement Summary and
Level of Service

Count Date:
Conditions: Future SATURDAY
Design Year: 2022

Location: Montrose Parkway @ Parklawn
Computed By: LL
Date: 3/4/14

Montgomery County Method

Morning Peak Hour 7:15-8:15 am

Lane Configuration

Evening Peak Hour 5:00-6:00 pm

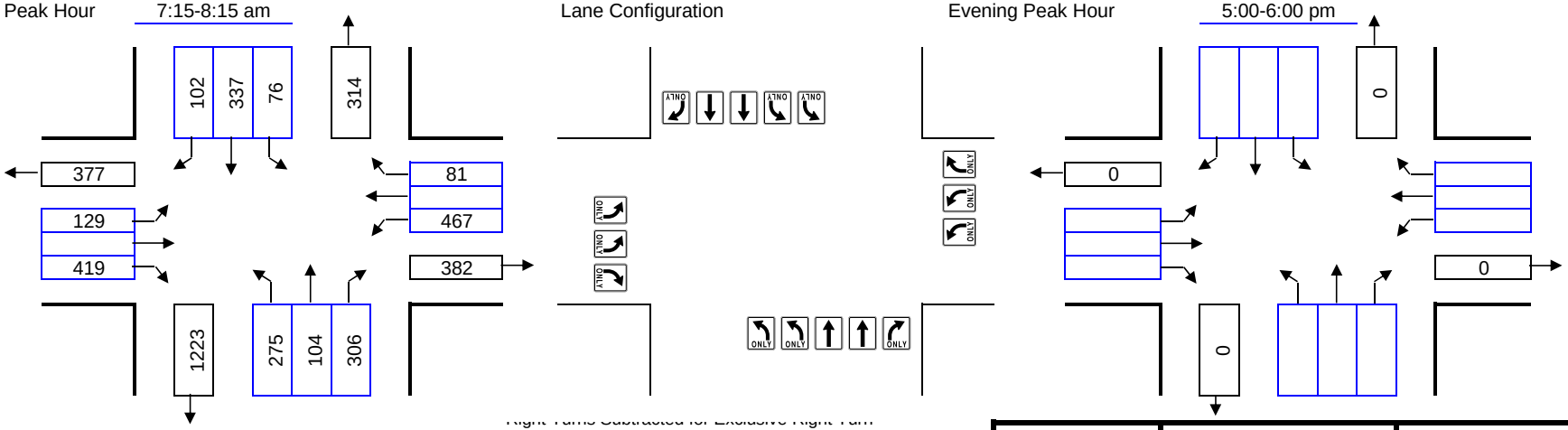

Right Turns Subtracted for Exclusive Right Turn Overlap Phasing or Right Turn on Red and Free Rights:

	AM		PM	
NB Approach:	NB	280	NB	
SB Approach:	SB		SB	
EB Approach:	EB	165	EB	
WB Approach:	WB		WB	

Number of Lanes	Lane Use Factor		Opposing Volume (vph)		PCE
1 =	1.00	Congestion Standard	≤	199	1.1
2 =	0.53	= 1550	≤	599	2.0
3 =	0.37	for	≤	799	3.0
4 =	0.30	North Bethesda	≤	999	4.0
Dbl-left	0.60	Policy	≥	1000	5.0
		Area			

Movement	Volume	PCE	Lane Use Factor	Lane Volume	Opposing Lefts	Critical Lane Volume	*
NBT + SBL	104	1.00	0.53	55	46	101	
SBT + NBL	337	1.00	0.53	179	165	344	*
EBR + WBL	254	1.00	1.00	254	280	534	*
WBR + EBL	81	1.00	1.00	81	77	158	
					Critical Volume	878	OK
					V/C	0.57	

Movement	Volume	PCE	Lane Use Factor	Lane Volume	Opposing Lefts	Critical Lane Volume	*
					Critical Volume	0	OK
					V/C	0.00	

HCM Signalized Intersection Capacity Analysis
1: Rollins Ave & MD 355

3/31/2014

Movement	EBL	EBT	EBR	WBL	WBT	WBR	NBL	NBT	NBR	SBL	SBT	SBR
Lane Configurations												
Volume (vph)	0	273	64	0	369	89	51	1641	314	169	2677	41
Ideal Flow (vphpl)	1900	1900	1900	1900	1900	1900	1900	1900	1900	1900	1900	1900
Total Lost time (s)		6.0			6.0		6.0	6.0	6.0	6.0	6.0	
Lane Util. Factor		0.95			0.95		1.00	0.91	1.00	1.00	0.91	
Frt		0.97			0.97		1.00	1.00	0.85	1.00	1.00	
Flt Protected		1.00			1.00		0.95	1.00	1.00	0.95	1.00	
Satd. Flow (prot)		3439			3436		1770	5085	1583	1770	5074	
Flt Permitted		1.00			1.00		0.04	1.00	1.00	0.09	1.00	
Satd. Flow (perm)		3439			3436		78	5085	1583	167	5074	
Peak-hour factor, PHF	0.95	0.95	0.95	0.95	0.95	0.95	0.95	0.95	0.95	0.95	0.95	0.95
Adj. Flow (vph)	0	287	67	0	388	94	54	1727	331	178	2818	43
RTOR Reduction (vph)	0	14	0	0	14	0	0	0	69	0	1	0
Lane Group Flow (vph)	0	340	0	0	468	0	54	1727	262	178	2860	0
Turn Type							pm+pt		Perm	pm+pt		
Protected Phases		4			8		5	2		1	6	
Permitted Phases							2		2	6		
Actuated Green, G (s)		24.8			24.8		100.2	95.2	95.2	113.2	102.2	
Effective Green, g (s)		24.8			24.8		100.2	95.2	95.2	113.2	102.2	
Actuated g/C Ratio		0.17			0.17		0.67	0.63	0.63	0.75	0.68	
Clearance Time (s)		6.0			6.0		6.0	6.0	6.0	6.0	6.0	
Vehicle Extension (s)		3.0			3.0		3.0	3.0	3.0	3.0	3.0	
Lane Grp Cap (vph)		569			568		109	3227	1005	254	3457	
v/s Ratio Prot		0.10			c0.14		0.02	0.34		c0.06	c0.56	
v/s Ratio Perm							0.31		0.17	0.47		
v/c Ratio		0.60			0.82		0.50	0.54	0.26	0.70	0.83	
Uniform Delay, d1		58.0			60.5		22.2	15.2	12.0	18.1	17.5	
Progression Factor		1.00			1.00		1.80	0.07	0.00	1.00	1.00	
Incremental Delay, d2		1.7			9.4		2.3	0.4	0.4	8.4	2.4	
Delay (s)		59.7			69.9		42.3	1.4	0.4	26.6	19.9	
Level of Service		E			E		D	A	A	C	B	
Approach Delay (s)		59.7			69.9			2.3			20.3	
Approach LOS		E			E			A			C	

Intersection Summary			
HCM Average Control Delay	20.3	HCM Level of Service	C
HCM Volume to Capacity ratio	0.84		
Actuated Cycle Length (s)	150.0	Sum of lost time (s)	18.0
Intersection Capacity Utilization	84.0%	ICU Level of Service	E
Analysis Period (min)	15		
c Critical Lane Group			

Movement	EBL	EBT	EBR	WBL	WBT	WBR	NBL	NBT	NBR	SBL	SBT	SBR
Lane Configurations												
Volume (vph)	5	15	40	1028	10	34	15	1826	230	58	2614	90
Ideal Flow (vphpl)	1900	1900	1900	1900	1900	1900	1900	1900	1900	1900	1900	1900
Total Lost time (s)		6.0	6.0	6.0	6.0		6.0	6.0	6.0	6.0	6.0	
Lane Util. Factor		1.00	1.00	0.97	1.00		1.00	0.91	1.00	1.00	0.91	
Frt		1.00	0.85	1.00	0.89		1.00	1.00	0.85	1.00	0.99	
Flt Protected		0.99	1.00	0.95	1.00		0.95	1.00	1.00	0.95	1.00	
Satd. Flow (prot)		1841	1583	3433	1649		1770	5085	1583	1770	5060	
Flt Permitted		0.99	1.00	0.95	1.00		0.95	1.00	1.00	0.06	1.00	
Satd. Flow (perm)		1841	1583	3433	1649		1770	5085	1583	108	5060	
Peak-hour factor, PHF	0.95	0.95	0.95	0.95	0.95	0.95	0.95	0.95	0.95	0.95	0.95	0.95
Adj. Flow (vph)	5	16	42	1082	11	36	16	1922	242	61	2752	95
RTOR Reduction (vph)	0	0	39	0	25	0	0	0	91	0	2	0
Lane Group Flow (vph)	0	21	3	1082	22	0	16	1922	151	61	2845	0
Turn Type	Split		Perm	Split			Prot		Perm	pm+pt		
Protected Phases	4	4		8	8		5	2		1	6	
Permitted Phases			4						2	6		
Actuated Green, G (s)		9.1	9.1	46.1	46.1		1.6	66.8	66.8	73.2	69.2	
Effective Green, g (s)		9.1	9.1	46.1	46.1		1.6	66.8	66.8	73.2	69.2	
Actuated g/C Ratio		0.06	0.06	0.31	0.31		0.01	0.45	0.45	0.49	0.46	
Clearance Time (s)		6.0	6.0	6.0	6.0		6.0	6.0	6.0	6.0	6.0	
Vehicle Extension (s)		3.0	3.0	3.0	3.0		3.0	3.0	3.0	3.0	3.0	
Lane Grp Cap (vph)		112	96	1055	507		19	2265	705	97	2334	
v/s Ratio Prot		c0.01		c0.32	0.01		0.01	0.38		c0.02	c0.56	
v/s Ratio Perm			0.00						0.10	0.29		
v/c Ratio		0.19	0.04	1.03	0.04		0.84	0.85	0.21	0.63	1.22	
Uniform Delay, d1		66.9	66.3	52.0	36.5		74.1	37.1	25.5	30.2	40.4	
Progression Factor		1.00	1.00	1.00	1.00		1.07	0.51	0.39	1.45	0.67	
Incremental Delay, d2		0.8	0.2	34.4	0.0		127.8	4.0	0.7	7.0	100.9	
Delay (s)		67.8	66.5	86.4	36.5		206.7	23.0	10.7	50.9	127.9	
Level of Service		E	E	F	D		F	C	B	D	F	
Approach Delay (s)		66.9			84.3			23.0			126.3	
Approach LOS		E			F			C			F	

Intersection Summary			
HCM Average Control Delay	82.3	HCM Level of Service	F
HCM Volume to Capacity ratio	1.03		
Actuated Cycle Length (s)	150.0	Sum of lost time (s)	18.0
Intersection Capacity Utilization	100.2%	ICU Level of Service	G
Analysis Period (min)	15		
c Critical Lane Group			

Movement	EBL	EBT	EBR	WBL	WBT	WBR	NBL	NBT	NBR	SBL	SBT	SBR
Lane Configurations												
Volume (vph)	20	0	25	55	20	35	30	1826	75	20	3645	50
Ideal Flow (vphpl)	1900	1900	1900	1900	1900	1900	1900	1900	1900	1900	1900	1900
Total Lost time (s)	6.0	6.0		6.0	6.0		6.0	6.0		6.0	6.0	
Lane Util. Factor	1.00	1.00		1.00	1.00		1.00	0.86		1.00	0.91	
Frt	1.00	0.85		1.00	0.90		1.00	0.99		1.00	1.00	
Flt Protected	0.95	1.00		0.95	1.00		0.95	1.00		0.95	1.00	
Satd. Flow (prot)	1770	1583		1770	1684		1770	6370		1770	5075	
Flt Permitted	0.72	1.00		0.74	1.00		0.95	1.00		0.95	1.00	
Satd. Flow (perm)	1340	1583		1379	1684		1770	6370		1770	5075	
Peak-hour factor, PHF	0.95	0.95	0.95	0.95	0.95	0.95	0.95	0.95	0.95	0.95	0.95	0.95
Adj. Flow (vph)	21	0	26	58	21	37	32	1922	79	21	3837	53
RTOR Reduction (vph)	0	24	0	0	34	0	0	3	0	0	1	0
Lane Group Flow (vph)	21	2	0	58	24	0	32	1998	0	21	3889	0
Turn Type	Perm			Perm			Prot			Prot		
Protected Phases		4			8		5	2		1	6	
Permitted Phases	4			8								
Actuated Green, G (s)	11.9	11.9		11.9	11.9		4.8	116.3		3.8	115.3	
Effective Green, g (s)	11.9	11.9		11.9	11.9		4.8	116.3		3.8	115.3	
Actuated g/C Ratio	0.08	0.08		0.08	0.08		0.03	0.78		0.03	0.77	
Clearance Time (s)	6.0	6.0		6.0	6.0		6.0	6.0		6.0	6.0	
Vehicle Extension (s)	3.0	3.0		3.0	3.0		3.0	3.0		3.0	3.0	
Lane Grp Cap (vph)	106	126		109	134		57	4939		45	3901	
v/s Ratio Prot		0.00			0.01		c0.02	0.31		0.01	c0.77	
v/s Ratio Perm	0.02			c0.04								
v/c Ratio	0.20	0.02		0.53	0.18		0.56	0.40		0.47	1.00	
Uniform Delay, d1	64.6	63.7		66.4	64.5		71.6	5.5		72.1	17.2	
Progression Factor	1.00	1.00		1.00	1.00		0.97	0.46		1.07	0.49	
Incremental Delay, d2	0.9	0.1		4.9	0.6		11.5	0.2		0.7	3.7	
Delay (s)	65.5	63.7		71.3	65.1		80.8	2.8		78.0	12.1	
Level of Service	E	E		E	E		F	A		E	B	
Approach Delay (s)		64.5			68.2			4.0			12.5	
Approach LOS		E			E			A			B	

Intersection Summary			
HCM Average Control Delay	11.1	HCM Level of Service	B
HCM Volume to Capacity ratio	0.94		
Actuated Cycle Length (s)	150.0	Sum of lost time (s)	18.0
Intersection Capacity Utilization	91.3%	ICU Level of Service	F
Analysis Period (min)	15		
c Critical Lane Group			

Intersection Sign configuration not allowed in HCM analysis.

Movement	EBL	EBT	EBR	WBL	WBT	WBR	NBL	NBT	NBR	SBL	SBT	SBR
Lane Configurations												
Volume (vph)	228	906	0	0	1799	215	218	0	138	0	0	0
Ideal Flow (vphpl)	1900	1900	1900	1900	1900	1900	1900	1900	1900	1900	1900	1900
Lane Width	11	11	11	11	11	11	11	11	11	11	11	11
Total Lost time (s)	6.0	6.0			6.0	6.0		6.0	6.0			
Lane Util. Factor	0.97	0.95			0.95	1.00		1.00	0.88			
Frt	1.00	1.00			1.00	0.85		1.00	0.85			
Flt Protected	0.95	1.00			1.00	1.00		0.95	1.00			
Satd. Flow (prot)	3319	3421			3421	1531		1711	2694			
Flt Permitted	0.95	1.00			1.00	1.00		0.95	1.00			
Satd. Flow (perm)	3319	3421			3421	1531		1711	2694			
Peak-hour factor, PHF	0.95	0.95	0.95	0.95	0.95	0.95	0.95	0.95	0.95	0.95	0.95	0.95
Adj. Flow (vph)	240	954	0	0	1894	226	229	0	145	0	0	0
RTOR Reduction (vph)	0	0	0	0	0	57	0	0	122	0	0	0
Lane Group Flow (vph)	240	954	0	0	1894	169	0	229	23	0	0	0
Turn Type	Prot					Perm	Perm		Perm			
Protected Phases	1	6			2			4				
Permitted Phases						2	4		4			
Actuated Green, G (s)	14.0	114.5			94.5	94.5		23.5	23.5			
Effective Green, g (s)	14.0	114.5			94.5	94.5		23.5	23.5			
Actuated g/C Ratio	0.09	0.76			0.63	0.63		0.16	0.16			
Clearance Time (s)	6.0	6.0			6.0	6.0		6.0	6.0			
Vehicle Extension (s)	3.0	3.0			3.0	3.0		3.0	3.0			
Lane Grp Cap (vph)	310	2611			2155	965		268	422			
v/s Ratio Prot	c0.07	0.28			c0.55							
v/s Ratio Perm						0.11		0.13	0.01			
v/c Ratio	0.77	0.37			0.88	0.17		0.85	0.05			
Uniform Delay, d1	66.5	5.8			23.0	11.5		61.6	53.8			
Progression Factor	0.86	1.67			0.07	0.00		0.52	0.38			
Incremental Delay, d2	3.9	0.1			1.8	0.1		21.1	0.0			
Delay (s)	61.3	9.8			3.4	0.1		53.4	20.4			
Level of Service	E	A			A	A		D	C			
Approach Delay (s)		20.2			3.0			40.6			0.0	
Approach LOS		C			A			D			A	

Intersection Summary			
HCM Average Control Delay	12.4	HCM Level of Service	B
HCM Volume to Capacity ratio	0.86		
Actuated Cycle Length (s)	150.0	Sum of lost time (s)	18.0
Intersection Capacity Utilization	83.3%	ICU Level of Service	E
Analysis Period (min)	15		

c Critical Lane Group

Movement	EBL	EBT	EBR	WBL	WBT	WBR	NBL	NBT	NBR	SBL	SBT	SBR
Lane Configurations												
Volume (vph)	54	463	207	65	287	214	77	1534	32	278	2732	26
Ideal Flow (vphpl)	1900	1900	1900	1900	1900	1900	1900	1900	1900	1900	1900	1900
Total Lost time (s)	6.0	6.0	6.0	6.0	6.0	6.0	6.0	6.0		6.0	6.0	6.0
Lane Util. Factor	*1.00	*1.00	1.00	1.00	1.00	1.00	1.00	0.91		1.00	0.91	1.00
Frt	1.00	1.00	0.85	1.00	1.00	0.85	1.00	1.00		1.00	1.00	0.85
Flt Protected	0.95	1.00	1.00	0.95	1.00	1.00	0.95	1.00		0.95	1.00	1.00
Satd. Flow (prot)	3539	1862	1583	1770	1863	1583	1770	5070		1770	5085	1583
Flt Permitted	0.95	1.00	1.00	0.95	1.00	1.00	0.08	1.00		0.07	1.00	1.00
Satd. Flow (perm)	3539	1862	1583	1770	1863	1583	149	5070		133	5085	1583
Peak-hour factor, PHF	0.95	0.95	0.95	0.95	0.95	0.95	0.95	0.95	0.95	0.95	0.95	0.95
Adj. Flow (vph)	57	487	218	68	302	225	81	1615	34	293	2876	27
RTOR Reduction (vph)	0	0	117	0	0	192	0	1	0	0	0	7
Lane Group Flow (vph)	51	493	101	68	302	33	81	1648	0	293	2876	20
Turn Type	Split		Perm	Split		Perm	pm+pt			pm+pt		Perm
Protected Phases	4	4		8	8		5	2		1	6	
Permitted Phases			4			8	2			6		6
Actuated Green, G (s)	33.0	33.0	33.0	22.0	22.0	22.0	54.0	50.0		77.0	67.0	67.0
Effective Green, g (s)	33.0	33.0	33.0	22.0	22.0	22.0	54.0	50.0		77.0	67.0	67.0
Actuated g/C Ratio	0.22	0.22	0.22	0.15	0.15	0.15	0.36	0.33		0.51	0.45	0.45
Clearance Time (s)	6.0	6.0	6.0	6.0	6.0	6.0	6.0	6.0		6.0	6.0	6.0
Vehicle Extension (s)	3.0	3.0	3.0	3.0	3.0	3.0	3.0	3.0		3.0	3.0	3.0
Lane Grp Cap (vph)	779	410	348	260	273	232	97	1690		297	2271	707
v/s Ratio Prot	0.01	c0.26		0.04	c0.16		0.02	0.33		c0.14	c0.57	
v/s Ratio Perm			0.06			0.02	0.28			0.37		0.01
v/c Ratio	0.07	1.20	0.29	0.26	1.11	0.14	0.84	0.97		0.99	1.27	0.03
Uniform Delay, d1	46.3	58.5	48.7	56.8	64.0	55.8	74.5	49.4		49.7	41.5	23.3
Progression Factor	0.89	0.75	0.92	1.00	1.00	1.00	1.38	0.69		1.45	0.62	0.59
Incremental Delay, d2	0.0	109.3	0.4	0.5	86.0	0.3	39.2	15.4		34.4	121.9	0.0
Delay (s)	41.4	153.4	45.4	57.3	150.0	56.1	142.1	49.6		106.6	147.8	13.8
Level of Service	D	F	D	E	F	E	F	D		F	F	B
Approach Delay (s)		115.0			103.9			53.9			142.9	
Approach LOS		F			F			D			F	

Intersection Summary			
HCM Average Control Delay	111.3	HCM Level of Service	F
HCM Volume to Capacity ratio	1.24		
Actuated Cycle Length (s)	150.0	Sum of lost time (s)	24.0
Intersection Capacity Utilization	116.5%	ICU Level of Service	H
Analysis Period (min)	15		
c Critical Lane Group			

Movement	EBL	EBT	EBR	WBL	WBT	WBR	NBL	NBT	NBR	SBL	SBT	SBR
Lane Configurations												
Volume (vph)	51	220	65	29	11	45	62	1525	85	169	2706	26
Ideal Flow (vphpl)	1900	1900	1900	1900	1900	1900	1900	1900	1900	1900	1900	1900
Total Lost time (s)	6.0	6.0		6.0	6.0	6.0	6.0	6.0	6.0	6.0	6.0	6.0
Lane Util. Factor	1.00	0.95		1.00	0.95	1.00	1.00	0.91	1.00	1.00	0.91	1.00
Frt	1.00	0.97		1.00	1.00	0.85	1.00	1.00	0.85	1.00	1.00	0.85
Flt Protected	0.95	1.00		0.95	1.00	1.00	0.95	1.00	1.00	0.95	1.00	1.00
Satd. Flow (prot)	1770	3419		1770	3539	1583	1770	5085	1583	1770	5085	1583
Flt Permitted	0.69	1.00		0.39	1.00	1.00	0.04	1.00	1.00	0.10	1.00	1.00
Satd. Flow (perm)	1288	3419		727	3539	1583	83	5085	1583	188	5085	1583
Peak-hour factor, PHF	0.95	0.95	0.95	0.95	0.95	0.95	0.95	0.95	0.95	0.95	0.95	0.95
Adj. Flow (vph)	54	232	68	31	12	47	65	1605	89	178	2848	27
RTOR Reduction (vph)	0	20	0	0	0	42	0	0	36	0	0	7
Lane Group Flow (vph)	54	280	0	31	12	5	65	1605	53	178	2848	20
Turn Type	pm+pt			pm+pt		Perm	pm+pt		Perm	pm+pt		Perm
Protected Phases	7	4		3	8		5	2		1	6	
Permitted Phases	4			8		8	2		2	6		6
Actuated Green, G (s)	23.8	18.2		21.0	16.8	16.8	96.3	90.0	90.0	109.6	97.3	97.3
Effective Green, g (s)	23.8	18.2		21.0	16.8	16.8	96.3	90.0	90.0	109.6	97.3	97.3
Actuated g/C Ratio	0.16	0.12		0.14	0.11	0.11	0.64	0.60	0.60	0.73	0.65	0.65
Clearance Time (s)	6.0	6.0		6.0	6.0	6.0	6.0	6.0	6.0	6.0	6.0	6.0
Vehicle Extension (s)	3.0	3.0		3.0	3.0	3.0	3.0	3.0	3.0	3.0	3.0	3.0
Lane Grp Cap (vph)	222	415		131	396	177	124	3051	950	281	3298	1027
v/s Ratio Prot	c0.01	c0.08		0.01	0.00		0.02	0.32		c0.06	c0.56	
v/s Ratio Perm	0.03			0.03		0.00	0.31		0.03	0.41		0.01
v/c Ratio	0.24	0.67		0.24	0.03	0.03	0.52	0.53	0.06	0.63	0.86	0.02
Uniform Delay, d1	54.8	63.1		56.6	59.3	59.3	26.0	17.5	12.4	14.3	21.0	9.4
Progression Factor	1.00	1.00		1.00	1.00	1.00	1.87	0.13	0.00	2.73	0.14	0.05
Incremental Delay, d2	0.6	4.3		0.9	0.0	0.1	2.3	0.4	0.1	1.8	1.3	0.0
Delay (s)	55.3	67.4		57.5	59.4	59.4	50.8	2.6	0.1	40.8	4.3	0.5
Level of Service	E	E		E	E	E	D	A	A	D	A	A
Approach Delay (s)		65.5			58.7			4.2			6.4	
Approach LOS		E			E			A			A	

Intersection Summary			
HCM Average Control Delay	10.5	HCM Level of Service	B
HCM Volume to Capacity ratio	0.79		
Actuated Cycle Length (s)	150.0	Sum of lost time (s)	18.0
Intersection Capacity Utilization	87.2%	ICU Level of Service	E
Analysis Period (min)	15		
c Critical Lane Group			

Movement	EBL	EBT	EBR	WBL	WBT	WBR	NBL	NBT	NBR	SBL	SBT	SBR
Lane Configurations												
Volume (vph)	141	600	6	144	362	77	41	1469	89	141	2534	71
Ideal Flow (vphpl)	1900	1900	1900	1900	1900	1900	1900	1900	1900	1900	1900	1900
Total Lost time (s)		6.0	6.0	6.0	6.0	6.0	6.0	6.0	6.0	6.0	6.0	6.0
Lane Util. Factor		0.95	1.00	0.97	0.95	1.00	1.00	0.91	1.00	1.00	0.91	1.00
Frt		1.00	0.85	1.00	1.00	0.85	1.00	1.00	0.85	1.00	1.00	0.85
Flt Protected		0.99	1.00	0.95	1.00	1.00	0.95	1.00	1.00	0.95	1.00	1.00
Satd. Flow (prot)		3506	1583	3433	3539	1583	1770	5085	1583	1770	5085	1583
Flt Permitted		0.77	1.00	0.18	1.00	1.00	0.95	1.00	1.00	0.07	1.00	1.00
Satd. Flow (perm)		2736	1583	639	3539	1583	1770	5085	1583	125	5085	1583
Peak-hour factor, PHF	0.95	0.95	0.95	0.95	0.95	0.95	0.95	0.95	0.95	0.95	0.95	0.95
Adj. Flow (vph)	148	632	6	152	381	81	43	1546	94	148	2667	75
RTOR Reduction (vph)	0	0	3	0	0	45	0	0	44	0	0	20
Lane Group Flow (vph)	0	780	3	152	381	36	43	1546	50	148	2667	55
Turn Type	Perm		Perm	pm+pt		Perm	Prot		Perm	pm+pt		Perm
Protected Phases		4		3	8		5	2		1	6	
Permitted Phases	4		4	8		8			2	6		6
Actuated Green, G (s)		51.7	51.7	67.0	67.0	67.0	5.6	54.3	54.3	70.1	59.4	59.4
Effective Green, g (s)		51.7	51.7	67.0	67.0	67.0	5.6	54.3	54.3	70.1	59.4	59.4
Actuated g/C Ratio		0.34	0.34	0.45	0.45	0.45	0.04	0.36	0.36	0.47	0.40	0.40
Clearance Time (s)		6.0	6.0	6.0	6.0	6.0	6.0	6.0	6.0	6.0	6.0	6.0
Vehicle Extension (s)		3.0	3.0	3.0	3.0	3.0	3.0	3.0	3.0	3.0	3.0	3.0
Lane Grp Cap (vph)		943	546	459	1581	707	66	1841	573	176	2014	627
v/s Ratio Prot				c0.02	0.11		0.02	0.30		c0.06	c0.52	
v/s Ratio Perm		c0.29	0.00	0.13		0.02			0.03	0.33		0.03
v/c Ratio		0.83	0.01	0.33	0.24	0.05	0.65	0.84	0.09	0.84	1.32	0.09
Uniform Delay, d1		45.1	32.3	27.2	25.7	23.5	71.2	43.9	31.5	37.5	45.3	28.3
Progression Factor		0.52	0.77	1.11	1.09	1.86	1.23	0.74	0.90	1.68	0.90	0.99
Incremental Delay, d2		5.1	0.0	0.4	0.1	0.0	18.1	4.2	0.3	17.8	147.9	0.2
Delay (s)		28.5	24.8	30.7	28.1	43.7	105.7	36.5	28.8	80.6	188.6	28.3
Level of Service		C	C	C	C	D	F	D	C	F	F	C
Approach Delay (s)		28.5			30.8			37.8			178.9	
Approach LOS		C			C			D			F	

Intersection Summary			
HCM Average Control Delay	104.1	HCM Level of Service	F
HCM Volume to Capacity ratio	1.05		
Actuated Cycle Length (s)	150.0	Sum of lost time (s)	24.0
Intersection Capacity Utilization	103.0%	ICU Level of Service	G
Analysis Period (min)	15		
c Critical Lane Group			

Movement	EBL	EBT	EBR	WBL	WBT	WBR	NBL	NBT	NBR	SBL	SBT	SBR
Lane Configurations												
Volume (vph)	42	0	185	111	0	74	108	1480	214	142	2183	198
Ideal Flow (vphpl)	1900	1900	1900	1900	1900	1900	1900	1900	1900	1900	1900	1900
Total Lost time (s)	6.0	6.0		6.0	6.0		6.0	6.0		6.0	6.0	6.0
Lane Util. Factor	1.00	1.00		1.00	1.00		1.00	0.86		1.00	0.91	1.00
Frt	1.00	0.85		1.00	0.85		1.00	0.98		1.00	1.00	0.85
Flt Protected	0.95	1.00		0.95	1.00		0.95	1.00		0.95	1.00	1.00
Satd. Flow (prot)	1770	1583		1770	1583		1770	6287		1770	5085	1583
Flt Permitted	0.71	1.00		0.27	1.00		0.05	1.00		0.95	1.00	1.00
Satd. Flow (perm)	1316	1583		500	1583		85	6287		1770	5085	1583
Peak-hour factor, PHF	0.95	0.95	0.95	0.95	0.95	0.95	0.95	0.95	0.95	0.95	0.95	0.95
Adj. Flow (vph)	44	0	195	117	0	78	114	1558	225	149	2298	208
RTOR Reduction (vph)	0	161	0	0	70	0	0	14	0	0	0	53
Lane Group Flow (vph)	44	34	0	117	8	0	114	1769	0	149	2298	155
Turn Type	pm+pt			pm+pt			pm+pt			Prot		Perm
Protected Phases	7	4		3	8		5	2		1	6	
Permitted Phases	4			8			2					6
Actuated Green, G (s)	16.2	10.2		25.6	14.9		98.1	87.2		17.9	94.2	94.2
Effective Green, g (s)	16.2	10.2		25.6	14.9		98.1	87.2		17.9	94.2	94.2
Actuated g/C Ratio	0.11	0.07		0.17	0.10		0.65	0.58		0.12	0.63	0.63
Clearance Time (s)	6.0	6.0		6.0	6.0		6.0	6.0		6.0	6.0	6.0
Vehicle Extension (s)	3.0	3.0		3.0	3.0		3.0	3.0		3.0	3.0	3.0
Lane Grp Cap (vph)	160	108		176	157		178	3655		211	3193	994
v/s Ratio Prot	0.01	0.02		c0.05	0.00		0.05	0.28		c0.08	c0.45	
v/s Ratio Perm	0.02			c0.07			0.37					0.10
v/c Ratio	0.28	0.31		0.66	0.05		0.64	0.48		0.71	0.72	0.16
Uniform Delay, d1	61.2	66.6		56.0	61.1		32.0	18.3		63.5	18.9	11.5
Progression Factor	1.00	1.00		1.00	1.00		1.32	0.65		1.18	0.31	0.08
Incremental Delay, d2	0.9	1.7		9.1	0.1		6.1	0.4		6.9	0.9	0.2
Delay (s)	62.1	68.2		65.1	61.3		48.2	12.3		82.0	6.8	1.1
Level of Service	E	E		E	E		D	B		F	A	A
Approach Delay (s)		67.1			63.6			14.4			10.6	
Approach LOS		E			E			B			B	

Intersection Summary			
HCM Average Control Delay	16.8	HCM Level of Service	B
HCM Volume to Capacity ratio	0.75		
Actuated Cycle Length (s)	150.0	Sum of lost time (s)	24.0
Intersection Capacity Utilization	85.8%	ICU Level of Service	E
Analysis Period (min)	15		
c Critical Lane Group			

Movement	EBL	EBT	EBR	WBL	WBT	WBR	NBL	NBT	NBR	SBL	SBT	SBR
Lane Configurations												
Volume (vph)	183	193	44	290	108	13	95	1604	147	28	2265	187
Ideal Flow (vphpl)	1900	1900	1900	1900	1900	1900	1900	1900	1900	1900	1900	1900
Total Lost time (s)		6.0	6.0	6.0	6.0	6.0	6.0	6.0	6.0	6.0	6.0	
Lane Util. Factor		0.95	1.00	0.95	0.95	1.00	1.00	0.91	1.00	1.00	0.91	
Frt		1.00	0.85	1.00	1.00	0.85	1.00	1.00	0.85	1.00	0.99	
Flt Protected		0.98	1.00	0.95	0.98	1.00	0.95	1.00	1.00	0.95	1.00	
Satd. Flow (prot)		3455	1583	1681	1730	1583	1770	5085	1583	1770	5027	
Flt Permitted		0.98	1.00	0.95	0.98	1.00	0.05	1.00	1.00	0.09	1.00	
Satd. Flow (perm)		3455	1583	1681	1730	1583	89	5085	1583	168	5027	
Peak-hour factor, PHF	0.95	0.95	0.95	0.95	0.95	0.95	0.95	0.95	0.95	0.95	0.95	0.95
Adj. Flow (vph)	193	203	46	305	114	14	100	1688	155	29	2384	197
RTOR Reduction (vph)	0	0	0	0	0	12	0	0	69	0	6	0
Lane Group Flow (vph)	0	396	46	207	212	2	100	1688	86	29	2575	0
Turn Type	Split		pm+ov	Split		Perm	pm+pt		Perm	pm+pt		
Protected Phases	4	4	5	8	8		5	2		1	6	
Permitted Phases			4			8	2		2	6		
Actuated Green, G (s)		18.0	25.0	20.4	20.4	20.4	90.5	83.5	83.5	84.7	80.6	
Effective Green, g (s)		18.0	25.0	20.4	20.4	20.4	90.5	83.5	83.5	84.7	80.6	
Actuated g/C Ratio		0.12	0.17	0.14	0.14	0.14	0.60	0.56	0.56	0.56	0.54	
Clearance Time (s)		6.0	6.0	6.0	6.0	6.0	6.0	6.0	6.0	6.0	6.0	
Vehicle Extension (s)		3.0	3.0	3.0	3.0	3.0	3.0	3.0	3.0	3.0	3.0	
Lane Grp Cap (vph)		415	264	229	235	215	132	2831	881	139	2701	
v/s Ratio Prot		c0.11	0.01	c0.12	0.12		c0.04	0.33		0.01	c0.51	
v/s Ratio Perm			0.02			0.00	c0.42		0.05	0.11		
v/c Ratio		0.95	0.17	0.90	0.90	0.01	0.76	0.60	0.10	0.21	0.95	
Uniform Delay, d1		65.6	53.6	63.8	63.8	56.1	37.1	22.1	15.6	17.0	32.9	
Progression Factor		1.31	1.24	1.00	1.00	1.00	1.85	0.18	0.00	0.81	0.58	
Incremental Delay, d2		24.9	0.2	34.5	33.6	0.0	17.5	0.7	0.2	0.5	7.2	
Delay (s)		111.0	66.5	98.4	97.4	56.1	86.2	4.8	0.2	14.3	26.4	
Level of Service		F	E	F	F	E	F	A	A	B	C	
Approach Delay (s)		106.3			96.5			8.6			26.3	
Approach LOS		F			F			A			C	

Intersection Summary			
HCM Average Control Delay	32.1	HCM Level of Service	C
HCM Volume to Capacity ratio	0.98		
Actuated Cycle Length (s)	150.0	Sum of lost time (s)	30.0
Intersection Capacity Utilization	94.7%	ICU Level of Service	F
Analysis Period (min)	15		
c Critical Lane Group			

Movement	EBL	EBT	EBR	WBL	WBT	WBR	NBL	NBT	NBR	SBL	SBT	SBR
Lane Configurations												
Volume (vph)	19	11	16	547	26	134	19	1710	307	51	2543	25
Ideal Flow (vphpl)	1900	1900	1900	1900	1900	1900	1900	1900	1900	1900	1900	1900
Total Lost time (s)		6.0	6.0	6.0	6.0	6.0	6.0	6.0	6.0	6.0	6.0	
Lane Util. Factor		1.00	1.00	0.95	0.95	1.00	1.00	0.91	1.00	1.00	0.91	
Frt		1.00	0.85	1.00	1.00	0.85	1.00	1.00	0.85	1.00	1.00	
Flt Protected		0.97	1.00	0.95	0.96	1.00	0.95	1.00	1.00	0.95	1.00	
Satd. Flow (prot)		1806	1583	1681	1693	1583	1770	5085	1583	1770	5078	
Flt Permitted		0.97	1.00	0.95	0.96	1.00	0.05	1.00	1.00	0.07	1.00	
Satd. Flow (perm)		1806	1583	1681	1693	1583	93	5085	1583	122	5078	
Peak-hour factor, PHF	0.95	0.95	0.95	0.95	0.95	0.95	0.95	0.95	0.95	0.95	0.95	0.95
Adj. Flow (vph)	20	12	17	576	27	141	20	1800	323	54	2677	26
RTOR Reduction (vph)	0	0	16	0	0	54	0	0	151	0	0	0
Lane Group Flow (vph)	0	32	1	300	303	87	20	1800	172	54	2703	0
Turn Type	Split		Perm	Split		Perm	pm+pt		Perm	pm+pt		
Protected Phases	4	4		8	8		5	2		1	6	
Permitted Phases			4			8	2		2	6		
Actuated Green, G (s)		9.4	9.4	31.3	31.3	31.3	83.7	79.8	79.8	86.9	81.4	
Effective Green, g (s)		9.4	9.4	31.3	31.3	31.3	83.7	79.8	79.8	86.9	81.4	
Actuated g/C Ratio		0.06	0.06	0.21	0.21	0.21	0.56	0.53	0.53	0.58	0.54	
Clearance Time (s)		6.0	6.0	6.0	6.0	6.0	6.0	6.0	6.0	6.0	6.0	
Vehicle Extension (s)		3.0	3.0	3.0	3.0	3.0	3.0	3.0	3.0	3.0	3.0	
Lane Grp Cap (vph)		113	99	351	353	330	95	2705	842	131	2756	
v/s Ratio Prot		c0.02		0.18	c0.18		0.01	0.35		c0.02	c0.53	
v/s Ratio Perm			0.00			0.06	0.11		0.11	0.22		
v/c Ratio		0.28	0.01	0.85	0.86	0.26	0.21	0.67	0.20	0.41	0.98	
Uniform Delay, d1		67.1	65.9	57.2	57.2	49.7	34.4	25.4	18.4	19.5	33.5	
Progression Factor		1.00	1.00	1.00	1.00	1.00	0.59	0.14	0.00	1.76	1.21	
Incremental Delay, d2		1.4	0.0	18.0	18.3	0.4	0.5	0.6	0.2	0.8	6.9	
Delay (s)		68.5	66.0	75.1	75.5	50.1	20.9	4.3	0.2	35.1	47.6	
Level of Service		E	E	E	E	D	C	A	A	D	D	
Approach Delay (s)		67.6			70.5			3.8			47.3	
Approach LOS		E			E			A			D	

Intersection Summary			
HCM Average Control Delay	34.2	HCM Level of Service	C
HCM Volume to Capacity ratio	0.85		
Actuated Cycle Length (s)	150.0	Sum of lost time (s)	18.0
Intersection Capacity Utilization	83.9%	ICU Level of Service	E
Analysis Period (min)	15		
c Critical Lane Group			

Movement	EBL	EBT	EBR	WBL	WBT	WBR	NBL	NBT	NBR	SBL	SBT	SBR
Lane Configurations												
Volume (vph)	76	604	539	18	189	162	90	1632	61	391	2289	255
Ideal Flow (vphpl)	1900	1900	1900	1900	1900	1900	1900	1900	1900	1900	1900	1900
Total Lost time (s)	6.0	6.0	6.0	6.0	6.0	6.0	6.0	6.0		6.0	6.0	6.0
Lane Util. Factor	0.91	0.91	1.00	0.91	0.91	1.00	1.00	0.91		1.00	0.91	1.00
Frt	1.00	1.00	0.85	1.00	1.00	0.85	1.00	0.99		1.00	1.00	0.85
Flt Protected	0.95	1.00	1.00	0.95	1.00	1.00	0.95	1.00		0.95	1.00	1.00
Satd. Flow (prot)	1610	3388	1583	1610	3389	1583	1770	5058		1770	5085	1583
Flt Permitted	0.95	1.00	1.00	0.95	1.00	1.00	0.95	1.00		0.07	1.00	1.00
Satd. Flow (perm)	1610	3388	1583	1610	3389	1583	1770	5058		131	5085	1583
Peak-hour factor, PHF	0.95	0.95	0.95	0.95	0.95	0.95	0.95	0.95	0.95	0.95	0.95	0.95
Adj. Flow (vph)	80	636	567	19	199	171	95	1718	64	412	2409	268
RTOR Reduction (vph)	0	0	202	0	0	155	0	3	0	0	0	139
Lane Group Flow (vph)	72	644	365	17	201	16	95	1779	0	412	2409	129
Turn Type	Split		Perm	Split		Perm	Prot			pm+pt		Perm
Protected Phases	4	4		8	8		5	2		1	6	
Permitted Phases			4			8				6		6
Actuated Green, G (s)	31.0	31.0	31.0	13.8	13.8	13.8	10.2	51.0		87.2	71.0	71.0
Effective Green, g (s)	31.0	31.0	31.0	13.8	13.8	13.8	10.2	51.0		87.2	71.0	71.0
Actuated g/C Ratio	0.21	0.21	0.21	0.09	0.09	0.09	0.07	0.34		0.58	0.47	0.47
Clearance Time (s)	6.0	6.0	6.0	6.0	6.0	6.0	6.0	6.0		6.0	6.0	6.0
Vehicle Extension (s)	3.0	3.0	3.0	3.0	3.0	3.0	3.0	3.0		3.0	3.0	3.0
Lane Grp Cap (vph)	333	700	327	148	312	146	120	1720		406	2407	749
v/s Ratio Prot	0.04	0.19		0.01	c0.06		0.05	0.35		c0.20	c0.47	
v/s Ratio Perm			c0.23			0.01				c0.39		0.08
v/c Ratio	0.22	0.92	1.12	0.11	0.64	0.11	0.79	1.03		1.01	1.00	0.17
Uniform Delay, d1	49.4	58.3	59.5	62.5	65.7	62.5	68.9	49.5		50.3	39.5	22.7
Progression Factor	0.92	0.94	0.88	1.00	1.00	1.00	1.00	1.00		1.05	1.13	3.98
Incremental Delay, d2	0.3	17.1	84.0	0.3	4.5	0.3	29.0	31.2		31.2	11.5	0.2
Delay (s)	45.8	71.8	136.4	62.8	70.2	62.8	97.8	80.7		84.3	56.2	90.3
Level of Service	D	E	F	E	E	E	F	F		F	E	F
Approach Delay (s)		98.9			66.6			81.5			62.9	
Approach LOS		F			E			F			E	

Intersection Summary			
HCM Average Control Delay	75.3	HCM Level of Service	E
HCM Volume to Capacity ratio	1.02		
Actuated Cycle Length (s)	150.0	Sum of lost time (s)	24.0
Intersection Capacity Utilization	97.8%	ICU Level of Service	F
Analysis Period (min)	15		
c Critical Lane Group			

Movement	EBL	EBT	WBT	WBR	SBL	SBR
Lane Configurations						
Volume (vph)	1298	2460	2113	10	0	445
Ideal Flow (vphpl)	1900	1900	1900	1900	1900	1900
Total Lost time (s)	6.0	4.0	6.0	6.0		4.0
Lane Util. Factor	0.94	0.95	0.95	1.00		1.00
Frt	1.00	1.00	1.00	0.85		0.86
Flt Protected	0.95	1.00	1.00	1.00		1.00
Satd. Flow (prot)	4990	3539	3539	1583		1611
Flt Permitted	0.95	1.00	1.00	1.00		1.00
Satd. Flow (perm)	4990	3539	3539	1583		1611
Peak-hour factor, PHF	0.95	0.95	0.95	0.95	0.95	0.95
Adj. Flow (vph)	1366	2589	2224	11	0	468
RTOR Reduction (vph)	0	0	0	0	0	0
Lane Group Flow (vph)	1366	2589	2224	11	0	468
Turn Type	Prot			Perm		Free
Protected Phases	1	Free	2			
Permitted Phases				2		Free
Actuated Green, G (s)	42.0	150.0	96.0	96.0		150.0
Effective Green, g (s)	42.0	150.0	96.0	96.0		150.0
Actuated g/C Ratio	0.28	1.00	0.64	0.64		1.00
Clearance Time (s)	6.0		6.0	6.0		
Vehicle Extension (s)	3.0		3.0	3.0		
Lane Grp Cap (vph)	1397	3539	2265	1013		1611
v/s Ratio Prot	c0.27	0.73	c0.63			
v/s Ratio Perm				0.01		0.29
v/c Ratio	0.98	0.73	0.98	0.01		0.29
Uniform Delay, d1	53.5	0.0	26.2	9.8		0.0
Progression Factor	1.00	1.00	1.14	1.32		1.00
Incremental Delay, d2	18.8	1.4	2.9	0.0		0.5
Delay (s)	72.3	1.4	32.7	12.9		0.5
Level of Service	E	A	C	B		A
Approach Delay (s)		25.9	32.6		0.5	
Approach LOS		C	C		A	

Intersection Summary			
HCM Average Control Delay	26.3	HCM Level of Service	C
HCM Volume to Capacity ratio	0.98		
Actuated Cycle Length (s)	150.0	Sum of lost time (s)	12.0
Intersection Capacity Utilization	93.1%	ICU Level of Service	F
Analysis Period (min)	15		
c Critical Lane Group			

Movement	EBL	EBT	EBR	WBL	WBT	WBR	NBL	NBT	NBR	SBL	SBT	SBR
Lane Configurations												
Volume (vph)	550	148	80	148	142	80	50	250	50	76	303	303
Ideal Flow (vphpl)	1900	1900	1900	1900	1900	1900	1900	1900	1900	1900	1900	1900
Total Lost time (s)	6.0	6.0	4.0	6.0	6.0		6.0	6.0		6.0	6.0	6.0
Lane Util. Factor	0.97	0.95	1.00	1.00	0.95		1.00	0.95		1.00	0.95	0.88
Frt	1.00	1.00	0.85	1.00	0.95		1.00	0.97		1.00	1.00	0.85
Flt Protected	0.95	1.00	1.00	0.95	1.00		0.95	1.00		0.95	1.00	1.00
Satd. Flow (prot)	3433	3539	1583	1770	3348		1770	3450		1770	3539	2787
Flt Permitted	0.95	1.00	1.00	0.95	1.00		0.95	1.00		0.95	1.00	1.00
Satd. Flow (perm)	3433	3539	1583	1770	3348		1770	3450		1770	3539	2787
Peak-hour factor, PHF	0.95	0.95	0.95	0.95	0.95	0.95	0.95	0.95	0.95	0.95	0.95	0.95
Adj. Flow (vph)	579	156	84	156	149	84	53	263	53	80	319	319
RTOR Reduction (vph)	0	0	0	0	39	0	0	12	0	0	0	196
Lane Group Flow (vph)	579	156	84	156	194	0	53	304	0	80	319	123
Turn Type	Prot		Free	Prot			Split			Split		pt+ov
Protected Phases	1	6		5	2		4	4		8	8	8 1
Permitted Phases			Free									
Actuated Green, G (s)	32.3	69.4	150.0	18.5	55.6		18.4	18.4		19.7	19.7	58.0
Effective Green, g (s)	32.3	69.4	150.0	18.5	55.6		18.4	18.4		19.7	19.7	58.0
Actuated g/C Ratio	0.22	0.46	1.00	0.12	0.37		0.12	0.12		0.13	0.13	0.39
Clearance Time (s)	6.0	6.0		6.0	6.0		6.0	6.0		6.0	6.0	
Vehicle Extension (s)	3.0	3.0		3.0	3.0		3.0	3.0		3.0	3.0	
Lane Grp Cap (vph)	739	1637	1583	218	1241		217	423		232	465	1078
v/s Ratio Prot	c0.17	0.04		0.09	c0.06		0.03	c0.09		0.05	c0.09	0.04
v/s Ratio Perm			0.05									
v/c Ratio	0.78	0.10	0.05	0.72	0.16		0.24	0.72		0.34	0.69	0.11
Uniform Delay, d1	55.5	22.7	0.0	63.2	31.5		59.5	63.3		59.3	62.2	29.5
Progression Factor	0.26	0.84	1.00	1.00	1.45		0.84	0.86		1.00	1.00	1.00
Incremental Delay, d2	1.6	0.0	0.0	10.3	0.3		0.6	5.5		0.9	4.2	0.0
Delay (s)	16.3	19.1	0.0	73.8	46.1		50.6	59.8		60.2	66.4	29.6
Level of Service	B	B	A	E	D		D	E		E	E	C
Approach Delay (s)		15.1			57.2			58.5			49.3	
Approach LOS		B			E			E			D	

Intersection Summary			
HCM Average Control Delay	39.9	HCM Level of Service	D
HCM Volume to Capacity ratio	0.48		
Actuated Cycle Length (s)	150.0	Sum of lost time (s)	24.0
Intersection Capacity Utilization	54.9%	ICU Level of Service	A
Analysis Period (min)	15		
c Critical Lane Group			

Intersection Sign configuration not allowed in HCM analysis.

Movement	EBL	EBT	EBR	WBL	WBT	WBR	NBL	NBT	NBR	SBL	SBT	SBR
Lane Configurations												
Volume (vph)	93	15	131	5	25	15	30	285	5	0	639	260
Ideal Flow (vphpl)	1900	1900	1900	1900	1900	1900	1900	1900	1900	1900	1900	1900
Total Lost time (s)		6.0	6.0	6.0	6.0		6.0	6.0			6.0	
Lane Util. Factor		1.00	0.88	1.00	1.00		0.97	0.95			0.95	
Frt		1.00	0.85	1.00	0.94		1.00	1.00			0.96	
Flt Protected		0.96	1.00	0.95	1.00		0.95	1.00			1.00	
Satd. Flow (prot)		1786	2787	1770	1756		3433	3531			3386	
Flt Permitted		0.96	1.00	0.68	1.00		0.95	1.00			1.00	
Satd. Flow (perm)		1786	2787	1273	1756		3433	3531			3386	
Peak-hour factor, PHF	0.95	0.95	0.95	0.95	0.95	0.95	0.95	0.95	0.95	0.95	0.95	0.95
Adj. Flow (vph)	98	16	138	5	26	16	32	300	5	0	673	274
RTOR Reduction (vph)	0	0	124	0	15	0	0	1	0	0	21	0
Lane Group Flow (vph)	0	114	14	5	27	0	32	304	0	0	926	0
Turn Type	Split		Perm	Perm			Prot			Perm		
Protected Phases	4	4			8		5	2			6	
Permitted Phases			4	8						6		
Actuated Green, G (s)		14.9	14.9	9.2	9.2		4.5	107.9			97.4	
Effective Green, g (s)		14.9	14.9	9.2	9.2		4.5	107.9			97.4	
Actuated g/C Ratio		0.10	0.10	0.06	0.06		0.03	0.72			0.65	
Clearance Time (s)		6.0	6.0	6.0	6.0		6.0	6.0			6.0	
Vehicle Extension (s)		3.0	3.0	3.0	3.0		3.0	3.0			3.0	
Lane Grp Cap (vph)		177	277	78	108		103	2540			2199	
v/s Ratio Prot		c0.06			c0.02		c0.01	0.09			c0.27	
v/s Ratio Perm			0.00	0.00								
v/c Ratio		0.64	0.05	0.06	0.25		0.31	0.12			0.42	
Uniform Delay, d1		65.0	61.1	66.3	67.1		71.2	6.5			12.7	
Progression Factor		1.27	2.82	1.00	1.00		0.94	1.47			1.50	
Incremental Delay, d2		7.7	0.1	0.3	1.2		1.7	0.1			0.2	
Delay (s)		90.1	172.5	66.7	68.3		68.5	9.6			19.2	
Level of Service		F	F	E	E		E	A			B	
Approach Delay (s)		135.2			68.2			15.2			19.2	
Approach LOS		F			E			B			B	

Intersection Summary			
HCM Average Control Delay	38.3	HCM Level of Service	D
HCM Volume to Capacity ratio	0.43		
Actuated Cycle Length (s)	150.0	Sum of lost time (s)	24.0
Intersection Capacity Utilization	48.9%	ICU Level of Service	A
Analysis Period (min)	15		
c Critical Lane Group			

Movement	EBL	EBT	EBR	WBL	WBT	WBR	NBL	NBT	NBR	SBL	SBT	SBR
Lane Configurations												
Volume (vph)	75	828	1633	170	1077	40	888	235	0	30	303	148
Ideal Flow (vphpl)	1900	1900	1900	1900	1900	1900	1900	1900	1900	1900	1900	1900
Total Lost time (s)	6.0	6.0	6.0	6.0	6.0		6.0	6.0		6.0	6.0	6.0
Lane Util. Factor	1.00	0.95	1.00	1.00	0.95		0.97	0.95		1.00	1.00	1.00
Frt	1.00	1.00	0.85	1.00	0.99		1.00	1.00		1.00	1.00	0.85
Flt Protected	0.95	1.00	1.00	0.95	1.00		0.95	1.00		0.95	1.00	1.00
Satd. Flow (prot)	1770	3539	1583	1770	3520		3433	3539		1770	1863	1583
Flt Permitted	0.12	1.00	1.00	0.25	1.00		0.95	1.00		0.95	1.00	1.00
Satd. Flow (perm)	216	3539	1583	470	3520		3433	3539		1770	1863	1583
Peak-hour factor, PHF	0.95	0.95	0.95	0.95	0.95	0.95	0.95	0.95	0.95	0.95	0.95	0.95
Adj. Flow (vph)	79	872	1719	179	1134	42	935	247	0	32	319	156
RTOR Reduction (vph)	0	0	246	0	2	0	0	0	0	0	0	68
Lane Group Flow (vph)	79	872	1473	179	1174	0	935	247	0	32	319	88
Turn Type	pm+pt		Perm	pm+pt			Prot			Prot		Perm
Protected Phases	7	4		3	8		5	2		1	6	
Permitted Phases	4		4	8								6
Actuated Green, G (s)	82.6	75.0	75.0	75.4	71.4		24.0	43.4		3.6	23.0	23.0
Effective Green, g (s)	82.6	75.0	75.0	75.4	71.4		24.0	43.4		3.6	23.0	23.0
Actuated g/C Ratio	0.55	0.50	0.50	0.50	0.48		0.16	0.29		0.02	0.15	0.15
Clearance Time (s)	6.0	6.0	6.0	6.0	6.0		6.0	6.0		6.0	6.0	6.0
Vehicle Extension (s)	3.0	3.0	3.0	3.0	3.0		3.0	3.0		3.0	3.0	3.0
Lane Grp Cap (vph)	198	1770	792	271	1676		549	1024		42	286	243
v/s Ratio Prot	c0.02	0.25		0.02	0.33		c0.27	0.07		0.02	c0.17	
v/s Ratio Perm	0.20		c0.93	0.31								0.06
v/c Ratio	0.40	0.49	1.86	0.66	0.70		1.70	0.24		0.76	1.12	0.36
Uniform Delay, d1	21.9	24.9	37.5	29.4	30.9		63.0	40.7		72.8	63.5	56.9
Progression Factor	1.00	1.00	1.00	0.68	0.50		1.11	1.15		0.66	0.84	1.40
Incremental Delay, d2	0.9	0.1	390.3	4.6	1.0		321.3	0.4		53.2	86.1	3.9
Delay (s)	22.9	25.0	427.8	24.6	16.6		391.4	47.4		101.0	139.5	83.4
Level of Service	C	C	F	C	B		F	D		F	F	F
Approach Delay (s)		284.3			17.7			319.5			119.8	
Approach LOS		F			B			F			F	

Intersection Summary			
HCM Average Control Delay	213.8	HCM Level of Service	F
HCM Volume to Capacity ratio	1.66		
Actuated Cycle Length (s)	150.0	Sum of lost time (s)	24.0
Intersection Capacity Utilization	141.5%	ICU Level of Service	H
Analysis Period (min)	15		
c Critical Lane Group			

Movement	EBL	EBT	EBR	WBL	WBT	WBR	NBL	NBT	NBR	SBL	SBT	SBR
Lane Configurations												
Volume (vph)	69	633	126	943	999	232	84	15	279	224	547	55
Ideal Flow (vphpl)	1900	1900	1900	1900	1900	1900	1900	1900	1900	1900	1900	1900
Lane Width	11	11	11	11	11	11	11	11	11	11	11	11
Total Lost time (s)	6.0	6.0		6.0	6.0	6.0	6.0	6.0		6.0	6.0	
Lane Util. Factor	1.00	0.95		1.00	0.95	0.88	1.00	1.00		0.97	1.00	
Frt	1.00	0.98		1.00	1.00	0.85	1.00	0.86		1.00	0.99	
Flt Protected	0.95	1.00		0.95	1.00	1.00	0.95	1.00		0.95	1.00	
Satd. Flow (prot)	1711	3336		1711	3421	2694	1711	1544		3319	1776	
Flt Permitted	0.27	1.00		0.12	1.00	1.00	0.95	1.00		0.95	1.00	
Satd. Flow (perm)	490	3336		218	3421	2694	1711	1544		3319	1776	
Peak-hour factor, PHF	0.95	0.95	0.95	0.95	0.95	0.95	0.95	0.95	0.95	0.95	0.95	0.95
Adj. Flow (vph)	73	666	133	993	1052	244	88	16	294	236	576	58
RTOR Reduction (vph)	0	11	0	0	0	0	0	269	0	0	2	0
Lane Group Flow (vph)	73	788	0	993	1052	244	88	41	0	236	632	0
Turn Type	pm+pt			pm+pt		pt+ov	Split			Split		
Protected Phases	1	6		5	2	2 8	4	4		8	8	
Permitted Phases	6			2								
Actuated Green, G (s)	34.6	27.0		79.0	65.4	105.6	12.8	12.8		40.2	40.2	
Effective Green, g (s)	34.6	27.0		79.0	65.4	105.6	12.8	12.8		40.2	40.2	
Actuated g/C Ratio	0.23	0.18		0.53	0.44	0.70	0.09	0.09		0.27	0.27	
Clearance Time (s)	6.0	6.0		6.0	6.0		6.0	6.0		6.0	6.0	
Vehicle Extension (s)	3.0	3.0		3.0	3.0		3.0	3.0		3.0	3.0	
Lane Grp Cap (vph)	175	600		573	1492	1897	146	132		889	476	
v/s Ratio Prot	0.02	0.24		c0.53	0.31	0.09	c0.05	0.03		0.07	c0.36	
v/s Ratio Perm	0.08			c0.38								
v/c Ratio	0.42	1.31		1.73	0.71	0.13	0.60	0.31		0.27	1.33	
Uniform Delay, d1	46.4	61.5		54.2	34.4	7.2	66.1	64.5		43.3	54.9	
Progression Factor	0.70	0.66		0.86	0.49	0.78	0.83	3.54		1.16	1.01	
Incremental Delay, d2	1.4	151.0		334.0	1.6	0.0	6.8	1.3		0.2	160.7	
Delay (s)	34.1	191.7		380.5	18.6	5.7	61.8	229.3		50.2	216.0	
Level of Service	C	F		F	B	A	E	F		D	F	
Approach Delay (s)		178.5			174.2			192.3			171.0	
Approach LOS		F			F			F			F	

Intersection Summary			
HCM Average Control Delay	176.0	HCM Level of Service	F
HCM Volume to Capacity ratio	1.46		
Actuated Cycle Length (s)	150.0	Sum of lost time (s)	18.0
Intersection Capacity Utilization	130.5%	ICU Level of Service	H
Analysis Period (min)	15		

c Critical Lane Group

Movement	EBL	EBT	EBR	WBL	WBT	WBR	NBL	NBT	NBR	SBL	SBT	SBR
Lane Configurations												
Volume (vph)	60	910	128	193	1974	140	38	0	62	95	0	30
Ideal Flow (vphpl)	1900	1900	1900	1900	1900	1900	1900	1900	1900	1900	1900	1900
Total Lost time (s)	6.0	6.0		6.0	6.0	6.0	6.0	6.0		6.0	6.0	
Lane Util. Factor	1.00	0.95		1.00	0.95	1.00	1.00	1.00		0.95	0.95	
Frt	1.00	0.98		1.00	1.00	0.85	1.00	0.85		1.00	0.93	
Flt Protected	0.95	1.00		0.95	1.00	1.00	0.95	1.00		0.95	0.98	
Satd. Flow (prot)	1770	3474		1770	3539	1583	1770	1583		1681	1597	
Flt Permitted	0.04	1.00		0.24	1.00	1.00	0.95	1.00		0.95	0.98	
Satd. Flow (perm)	78	3474		446	3539	1583	1770	1583		1681	1597	
Peak-hour factor, PHF	0.95	0.95	0.95	0.95	0.95	0.95	0.95	0.95	0.95	0.95	0.95	0.95
Adj. Flow (vph)	63	958	135	203	2078	147	40	0	65	100	0	32
RTOR Reduction (vph)	0	7	0	0	0	36	0	58	0	0	24	0
Lane Group Flow (vph)	63	1086	0	203	2078	111	40	7	0	68	40	0
Turn Type	pm+pt			Perm		Perm	Split			Split		
Protected Phases	7	4			8		2	2		6	6	
Permitted Phases	4			8		8						
Actuated Green, G (s)	100.0	100.0		90.0	90.0	90.0	16.0	16.0		16.0	16.0	
Effective Green, g (s)	100.0	100.0		90.0	90.0	90.0	16.0	16.0		16.0	16.0	
Actuated g/C Ratio	0.67	0.67		0.60	0.60	0.60	0.11	0.11		0.11	0.11	
Clearance Time (s)	6.0	6.0		6.0	6.0	6.0	6.0	6.0		6.0	6.0	
Vehicle Extension (s)	3.0	3.0		3.0	3.0	3.0	3.0	3.0		3.0	3.0	
Lane Grp Cap (vph)	97	2316		268	2123	950	189	169		179	170	
v/s Ratio Prot	0.02	c0.31			c0.59		c0.02	0.00		c0.04	0.02	
v/s Ratio Perm	0.42			0.46		0.07						
v/c Ratio	0.65	0.47		0.76	0.98	0.12	0.21	0.04		0.38	0.23	
Uniform Delay, d1	38.2	12.1		22.0	29.1	12.9	61.2	60.1		62.4	61.4	
Progression Factor	1.54	1.24		0.77	0.75	0.57	1.00	1.00		1.00	1.00	
Incremental Delay, d2	13.5	0.1		11.4	14.6	0.1	2.5	0.5		6.0	3.2	
Delay (s)	72.5	15.2		28.5	36.4	7.5	63.8	60.6		68.4	64.6	
Level of Service	E	B		C	D	A	E	E		E	E	
Approach Delay (s)		18.3			34.0			61.8			66.6	
Approach LOS		B			C			E			E	

Intersection Summary			
HCM Average Control Delay	31.2	HCM Level of Service	C
HCM Volume to Capacity ratio	0.80		
Actuated Cycle Length (s)	150.0	Sum of lost time (s)	24.0
Intersection Capacity Utilization	83.1%	ICU Level of Service	E
Analysis Period (min)	15		
c Critical Lane Group			

Movement	WBL	WBR	NBT	NBR	SBL	SBT
Lane Configurations						
Volume (vph)	509	0	86	141	40	128
Ideal Flow (vphpl)	1900	1900	1900	1900	1900	1900
Total Lost time (s)	6.0		6.0	6.0	6.0	6.0
Lane Util. Factor	1.00		1.00	1.00	1.00	1.00
Frt	1.00		1.00	0.85	1.00	1.00
Flt Protected	0.95		1.00	1.00	0.95	1.00
Satd. Flow (prot)	1770		1863	1583	1770	1863
Flt Permitted	0.95		1.00	1.00	0.70	1.00
Satd. Flow (perm)	1770		1863	1583	1300	1863
Peak-hour factor, PHF	0.95	0.95	0.95	0.95	0.95	0.95
Adj. Flow (vph)	536	0	91	148	42	135
RTOR Reduction (vph)	0	0	0	83	0	0
Lane Group Flow (vph)	536	0	91	65	42	135
Turn Type		Perm		Perm	Perm	
Protected Phases	8		2			6
Permitted Phases		8		2	6	
Actuated Green, G (s)	30.0		33.0	33.0	33.0	33.0
Effective Green, g (s)	30.0		33.0	33.0	33.0	33.0
Actuated g/C Ratio	0.40		0.44	0.44	0.44	0.44
Clearance Time (s)	6.0		6.0	6.0	6.0	6.0
Vehicle Extension (s)	3.0		3.0	3.0	3.0	3.0
Lane Grp Cap (vph)	708		820	697	572	820
v/s Ratio Prot	c0.30		0.05			c0.07
v/s Ratio Perm				0.04	0.03	
v/c Ratio	0.76		0.11	0.09	0.07	0.16
Uniform Delay, d1	19.4		12.4	12.3	12.2	12.7
Progression Factor	0.63		1.00	1.00	1.00	1.00
Incremental Delay, d2	3.9		0.3	0.3	0.2	0.4
Delay (s)	16.2		12.6	12.5	12.4	13.1
Level of Service	B		B	B	B	B
Approach Delay (s)	16.2		12.6			12.9
Approach LOS	B		B			B

Intersection Summary			
HCM Average Control Delay	14.7	HCM Level of Service	B
HCM Volume to Capacity ratio	0.45		
Actuated Cycle Length (s)	75.0	Sum of lost time (s)	12.0
Intersection Capacity Utilization	47.1%	ICU Level of Service	A
Analysis Period (min)	15		
c Critical Lane Group			

Movement	EBL	EBT	EBR	WBL	WBT	WBR	NBL	NBT	NBR	SBL	SBT	SBR
Lane Configurations												
Volume (vph)	68	112	55	0	253	183	90	275	0	144	584	255
Ideal Flow (vphpl)	1900	1900	1900	1900	1900	1900	1900	1900	1900	1900	1900	1900
Total Lost time (s)	6.0	6.0	6.0		6.0	6.0		6.0		6.0	6.0	
Lane Util. Factor	1.00	0.95	1.00		0.95	1.00		0.95		0.91	0.91	
Frt	1.00	1.00	0.85		1.00	0.85		1.00		1.00	0.96	
Flt Protected	0.95	1.00	1.00		1.00	1.00		0.99		0.95	1.00	
Satd. Flow (prot)	1770	3539	1583		3539	1583		3496		1610	3236	
Flt Permitted	0.30	1.00	1.00		1.00	1.00		0.99		0.95	1.00	
Satd. Flow (perm)	553	3539	1583		3539	1583		3496		1610	3236	
Peak-hour factor, PHF	0.95	0.95	0.95	0.95	0.95	0.95	0.95	0.95	0.95	0.95	0.95	0.95
Adj. Flow (vph)	72	118	58	0	266	193	95	289	0	152	615	268
RTOR Reduction (vph)	0	0	46	0	0	172	0	0	0	0	29	0
Lane Group Flow (vph)	72	118	12	0	266	21	0	384	0	137	869	0
Turn Type	pm+pt		Perm			Perm	Split			Split		
Protected Phases	7	4			8		2	2		6	6	
Permitted Phases	4		4			8						
Actuated Green, G (s)	30.5	30.5	30.5		16.7	16.7		41.5		60.0	60.0	
Effective Green, g (s)	30.5	30.5	30.5		16.7	16.7		41.5		60.0	60.0	
Actuated g/C Ratio	0.20	0.20	0.20		0.11	0.11		0.28		0.40	0.40	
Clearance Time (s)	6.0	6.0	6.0		6.0	6.0		6.0		6.0	6.0	
Vehicle Extension (s)	3.0	3.0	3.0		3.0	3.0		3.0		3.0	3.0	
Lane Grp Cap (vph)	176	720	322		394	176		967		644	1294	
v/s Ratio Prot	c0.02	0.03			c0.08			c0.11		0.09	c0.27	
v/s Ratio Perm	0.06		0.01			0.01						
v/c Ratio	0.41	0.16	0.04		0.68	0.12		0.40		0.21	0.67	
Uniform Delay, d1	50.1	49.2	48.0		64.0	60.0		44.1		29.5	36.9	
Progression Factor	0.92	0.92	0.76		0.91	0.69		0.63		0.65	0.61	
Incremental Delay, d2	1.5	0.1	0.0		4.5	0.3		0.9		0.7	2.4	
Delay (s)	47.6	45.6	36.3		62.6	41.6		28.4		19.7	24.8	
Level of Service	D	D	D		E	D		C		B	C	
Approach Delay (s)		44.0			53.8			28.4			24.1	
Approach LOS		D			D			C			C	

Intersection Summary			
HCM Average Control Delay	33.6	HCM Level of Service	C
HCM Volume to Capacity ratio	0.57		
Actuated Cycle Length (s)	150.0	Sum of lost time (s)	24.0
Intersection Capacity Utilization	60.0%	ICU Level of Service	B
Analysis Period (min)	15		
c Critical Lane Group			

Movement	EBL	EBT	EBR	WBL	WBT	WBR	NBL	NBT	NBR	SBL	SBT	SBR
Lane Configurations												
Volume (vph)	15	485	25	10	1409	0	55	0	15	0	0	25
Ideal Flow (vphpl)	1900	1900	1900	1900	1900	1900	1900	1900	1900	1900	1900	1900
Total Lost time (s)	6.0	6.0		6.0	6.0		6.0	6.0			6.0	
Lane Util. Factor	1.00	0.95		1.00	0.95		1.00	1.00			1.00	
Frt	1.00	0.99		1.00	1.00		1.00	0.85			0.86	
Flt Protected	0.95	1.00		0.95	1.00		0.95	1.00			1.00	
Satd. Flow (prot)	1770	3514		1770	3539		1770	1583			1611	
Flt Permitted	0.14	1.00		0.41	1.00		0.74	1.00			1.00	
Satd. Flow (perm)	256	3514		757	3539		1379	1583			1611	
Peak-hour factor, PHF	0.95	0.95	0.95	0.95	0.95	0.95	0.95	0.95	0.95	0.95	0.95	0.95
Adj. Flow (vph)	16	511	26	11	1483	0	58	0	16	0	0	26
RTOR Reduction (vph)	0	3	0	0	0	0	0	12	0	0	20	0
Lane Group Flow (vph)	16	534	0	11	1483	0	58	4	0	0	6	0
Turn Type	Perm			pm+pt			Perm			Perm		
Protected Phases		4		3	8			2			6	
Permitted Phases	4			8			2			6		
Actuated Green, G (s)	95.3	95.3		103.7	103.7		34.3	34.3			34.3	
Effective Green, g (s)	95.3	95.3		103.7	103.7		34.3	34.3			34.3	
Actuated g/C Ratio	0.64	0.64		0.69	0.69		0.23	0.23			0.23	
Clearance Time (s)	6.0	6.0		6.0	6.0		6.0	6.0			6.0	
Vehicle Extension (s)	3.0	3.0		3.0	3.0		3.0	3.0			3.0	
Lane Grp Cap (vph)	163	2233		540	2447		315	362			368	
v/s Ratio Prot		0.15		0.00	c0.42			0.00			0.00	
v/s Ratio Perm	0.06			0.01			c0.04					
v/c Ratio	0.10	0.24		0.02	0.61		0.18	0.01			0.02	
Uniform Delay, d1	10.6	11.8		7.5	12.3		46.6	44.7			44.8	
Progression Factor	0.38	0.32		1.00	1.00		1.00	1.00			1.00	
Incremental Delay, d2	0.3	0.1		0.0	0.4		1.3	0.1			0.1	
Delay (s)	4.3	3.8		7.6	12.7		47.9	44.8			44.9	
Level of Service	A	A		A	B		D	D			D	
Approach Delay (s)		3.8			12.7			47.2			44.9	
Approach LOS		A			B			D			D	

Intersection Summary			
HCM Average Control Delay	12.0	HCM Level of Service	B
HCM Volume to Capacity ratio	0.50		
Actuated Cycle Length (s)	150.0	Sum of lost time (s)	12.0
Intersection Capacity Utilization	58.7%	ICU Level of Service	B
Analysis Period (min)	15		
c Critical Lane Group			

Movement	EBL	EBT	EBR	WBL	WBT	WBR	NBL	NBT	NBR	SBL	SBT	SBR
Lane Configurations												
Volume (vph)	41	881	1014	114	368	27	501	294	151	85	1338	14
Ideal Flow (vphpl)	1900	1900	1900	1900	1900	1900	1900	1900	1900	1900	1900	1900
Total Lost time (s)	6.0	6.0	6.0	6.0	6.0		6.0	6.0	6.0	6.0	6.0	
Lane Util. Factor	1.00	0.95	1.00	0.97	0.95		0.97	0.95	1.00	1.00	0.95	
Frt	1.00	1.00	0.85	1.00	0.99		1.00	1.00	0.85	1.00	1.00	
Flt Protected	0.95	1.00	1.00	0.95	1.00		0.95	1.00	1.00	0.95	1.00	
Satd. Flow (prot)	1770	3539	1583	3433	3503		3433	3539	1583	1770	3534	
Flt Permitted	0.95	1.00	1.00	0.95	1.00		0.95	1.00	1.00	0.95	1.00	
Satd. Flow (perm)	1770	3539	1583	3433	3503		3433	3539	1583	1770	3534	
Peak-hour factor, PHF	0.95	0.95	0.95	0.95	0.95	0.95	0.95	0.95	0.95	0.95	0.95	0.95
Adj. Flow (vph)	43	927	1067	120	387	28	527	309	159	89	1408	15
RTOR Reduction (vph)	0	0	181	0	4	0	0	0	142	0	1	0
Lane Group Flow (vph)	43	927	886	120	411	0	527	309	17	89	1422	0
Turn Type	Prot		Perm	Prot			Split		Perm	Split		
Protected Phases	7	4		3	8		1	1		2	2	
Permitted Phases			4						1			
Actuated Green, G (s)	6.9	55.3	55.3	11.9	60.3		16.0	16.0	16.0	42.8	42.8	
Effective Green, g (s)	6.9	55.3	55.3	11.9	60.3		16.0	16.0	16.0	42.8	42.8	
Actuated g/C Ratio	0.05	0.37	0.37	0.08	0.40		0.11	0.11	0.11	0.29	0.29	
Clearance Time (s)	6.0	6.0	6.0	6.0	6.0		6.0	6.0	6.0	6.0	6.0	
Vehicle Extension (s)	3.0	3.0	3.0	3.0	3.0		3.0	3.0	3.0	3.0	3.0	
Lane Grp Cap (vph)	81	1305	584	272	1408		366	377	169	505	1008	
v/s Ratio Prot	0.02	0.26		c0.03	c0.12		c0.15	0.09		0.05	c0.40	
v/s Ratio Perm			c0.56						0.01			
v/c Ratio	0.53	0.71	1.52	0.44	0.29		1.44	0.82	0.10	0.18	1.41	
Uniform Delay, d1	70.0	40.5	47.4	65.9	30.4		67.0	65.6	60.5	40.3	53.6	
Progression Factor	1.09	0.69	0.56	0.65	1.34		0.74	0.73	0.91	0.70	0.77	
Incremental Delay, d2	0.6	0.2	233.9	1.1	0.1		211.3	11.7	0.2	0.6	189.5	
Delay (s)	77.1	28.1	260.2	43.7	40.7		261.0	59.8	55.0	28.9	230.9	
Level of Service	E	C	F	D	D		F	E	E	C	F	
Approach Delay (s)		150.7			41.4			165.6			219.0	
Approach LOS		F			D			F			F	

Intersection Summary			
HCM Average Control Delay	162.5	HCM Level of Service	F
HCM Volume to Capacity ratio	1.44		
Actuated Cycle Length (s)	150.0	Sum of lost time (s)	30.0
Intersection Capacity Utilization	118.6%	ICU Level of Service	H
Analysis Period (min)	15		
c Critical Lane Group			

Movement	EBL	EBT	EBR	WBL	WBT	WBR	NBL	NBT	NBR	SBL	SBT	SBR
Lane Configurations												
Volume (vph)	144	748	306	16	276	81	230	23	1	55	18	32
Ideal Flow (vphpl)	1900	1900	1900	1900	1900	1900	1900	1900	1900	1900	1900	1900
Total Lost time (s)	6.0	6.0	6.0	6.0	6.0	6.0	6.0	6.0	6.0	6.0	6.0	
Lane Util. Factor	1.00	0.95	1.00	1.00	0.95	1.00	0.95	0.95	1.00	1.00	1.00	
Frt	1.00	1.00	0.85	1.00	1.00	0.85	1.00	1.00	0.85	1.00	0.90	
Flt Protected	0.95	1.00	1.00	0.95	1.00	1.00	0.95	0.96	1.00	0.95	1.00	
Satd. Flow (prot)	1770	3539	1583	1770	3539	1583	1681	1700	1583	1770	1683	
Flt Permitted	0.57	1.00	1.00	0.24	1.00	1.00	0.95	0.69	1.00	0.95	1.00	
Satd. Flow (perm)	1069	3539	1583	449	3539	1583	1681	1214	1583	1770	1683	
Peak-hour factor, PHF	0.95	0.95	0.95	0.95	0.95	0.95	0.95	0.95	0.95	0.95	0.95	0.95
Adj. Flow (vph)	152	787	322	17	291	85	242	24	1	58	19	34
RTOR Reduction (vph)	0	0	208	0	0	55	0	0	1	0	24	0
Lane Group Flow (vph)	152	787	114	17	291	30	133	133	0	58	29	0
Turn Type	Perm		Perm	Perm		Perm	Prot		Perm	Prot		
Protected Phases		4			8		5	2		1	6	
Permitted Phases	4		4	8		8			2			
Actuated Green, G (s)	26.6	26.6	26.6	26.6	26.6	26.6	8.9	35.1	26.2	4.2	21.5	
Effective Green, g (s)	26.6	26.6	26.6	26.6	26.6	26.6	8.9	35.1	26.2	4.2	21.5	
Actuated g/C Ratio	0.35	0.35	0.35	0.35	0.35	0.35	0.12	0.47	0.35	0.06	0.29	
Clearance Time (s)	6.0	6.0	6.0	6.0	6.0	6.0	6.0	6.0	6.0	6.0	6.0	
Vehicle Extension (s)	3.0	3.0	3.0	3.0	3.0	3.0	3.0	3.0	3.0	3.0	3.0	
Lane Grp Cap (vph)	379	1255	561	159	1255	561	199	626	553	99	482	
v/s Ratio Prot		c0.22			0.08		c0.08	c0.03		0.03	0.02	
v/s Ratio Perm	0.14		0.07	0.04		0.02		c0.07	0.00			
v/c Ratio	0.40	0.63	0.20	0.11	0.23	0.05	0.67	0.21	0.00	0.59	0.06	
Uniform Delay, d1	18.2	20.1	16.8	16.2	17.0	15.9	31.6	11.8	15.9	34.6	19.4	
Progression Factor	0.77	0.74	2.48	1.06	1.11	3.59	1.00	1.00	1.00	1.00	1.00	
Incremental Delay, d2	2.5	1.9	0.6	0.4	0.1	0.0	8.2	0.2	0.0	8.6	0.2	
Delay (s)	16.5	16.8	42.5	17.6	19.1	57.2	39.9	12.0	15.9	43.1	19.7	
Level of Service	B	B	D	B	B	E	D	B	B	D	B	
Approach Delay (s)		23.3			27.3			25.9			31.9	
Approach LOS		C			C			C			C	

Intersection Summary			
HCM Average Control Delay	24.9	HCM Level of Service	C
HCM Volume to Capacity ratio	0.48		
Actuated Cycle Length (s)	75.0	Sum of lost time (s)	18.0
Intersection Capacity Utilization	52.7%	ICU Level of Service	A
Analysis Period (min)	15		
c Critical Lane Group			

Movement	EBL	EBR	NBL	NBT	SBT	SBR
Lane Configurations						
Volume (veh/h)	164	193	82	100	273	235
Sign Control	Stop			Free	Free	
Grade	0%			0%	0%	
Peak Hour Factor	0.95	0.95	0.95	0.95	0.95	0.95
Hourly flow rate (vph)	173	203	86	105	287	247
Pedestrians						
Lane Width (ft)						
Walking Speed (ft/s)						
Percent Blockage						
Right turn flare (veh)						
Median type				None	None	
Median storage veh)						
Upstream signal (ft)					1305	
pX, platoon unblocked						
vC, conflicting volume	565	287	535			
vC1, stage 1 conf vol						
vC2, stage 2 conf vol						
vCu, unblocked vol	565	287	535			
tC, single (s)	6.4	6.2	4.1			
tC, 2 stage (s)						
tF (s)	3.5	3.3	2.2			
p0 queue free %	61	73	92			
cM capacity (veh/h)	445	752	1033			

Direction, Lane #	EB 1	EB 2	NB 1	NB 2	SB 1	SB 2
Volume Total	173	203	86	105	287	247
Volume Left	173	0	86	0	0	0
Volume Right	0	203	0	0	0	247
cSH	445	752	1033	1700	1700	1700
Volume to Capacity	0.39	0.27	0.08	0.06	0.17	0.15
Queue Length 95th (ft)	45	27	7	0	0	0
Control Delay (s)	18.1	11.6	8.8	0.0	0.0	0.0
Lane LOS	C	B	A			
Approach Delay (s)	14.6		4.0		0.0	
Approach LOS	B					

Intersection Summary			
Average Delay	5.7		
Intersection Capacity Utilization	38.0%	ICU Level of Service	A
Analysis Period (min)	15		

Movement	EBL	EBT	EBR	WBL	WBT	WBR	NBL	NBT	NBR	SBL	SBT	SBR
Lane Configurations												
Volume (vph)	12	53	17	238	36	131	1	926	526	340	2121	7
Ideal Flow (vphpl)	1900	1900	1900	1900	1900	1900	1900	1900	1900	1900	1900	1900
Total Lost time (s)		6.0		6.0	6.0		6.0	6.0	6.0	6.0	6.0	
Lane Util. Factor		0.95		0.97	1.00		1.00	0.95	1.00	1.00	0.91	
Frt		0.97		1.00	0.88		1.00	1.00	0.85	1.00	1.00	
Flt Protected		0.99		0.95	1.00		0.95	1.00	1.00	0.95	1.00	
Satd. Flow (prot)		3404		3433	1644		1770	3539	1583	1770	5083	
Flt Permitted		0.99		0.95	1.00		0.06	1.00	1.00	0.20	1.00	
Satd. Flow (perm)		3404		3433	1644		104	3539	1583	371	5083	
Peak-hour factor, PHF	0.95	0.95	0.95	0.95	0.95	0.95	0.95	0.95	0.95	0.95	0.95	0.95
Adj. Flow (vph)	13	56	18	251	38	138	1	975	554	358	2233	7
RTOR Reduction (vph)	0	16	0	0	89	0	0	0	216	0	0	0
Lane Group Flow (vph)	0	71	0	251	87	0	1	975	338	358	2240	0
Turn Type	Split			Split			pm+pt		Perm	pm+pt		
Protected Phases	4	4		8	8		5	2		1	6	
Permitted Phases							2		2	6		
Actuated Green, G (s)		10.8		15.7	15.7		81.3	80.2	80.2	105.5	98.4	
Effective Green, g (s)		10.8		15.7	15.7		81.3	80.2	80.2	105.5	98.4	
Actuated g/C Ratio		0.07		0.10	0.10		0.54	0.53	0.53	0.70	0.66	
Clearance Time (s)		6.0		6.0	6.0		6.0	6.0	6.0	6.0	6.0	
Vehicle Extension (s)		3.0		3.0	3.0		3.0	3.0	3.0	3.0	3.0	
Lane Grp Cap (vph)		245		359	172		69	1892	846	441	3334	
v/s Ratio Prot		c0.02		c0.07	0.05		0.00	0.28		c0.10	0.44	
v/s Ratio Perm							0.01		0.21	c0.47		
v/c Ratio		0.29		0.70	0.51		0.01	0.52	0.40	0.81	0.67	
Uniform Delay, d1		66.0		64.9	63.5		17.0	22.4	20.6	15.7	15.9	
Progression Factor		1.00		0.70	0.97		0.46	0.27	0.11	0.75	0.80	
Incremental Delay, d2		0.7		5.8	2.3		0.1	0.8	1.2	1.1	0.1	
Delay (s)		66.6		51.5	63.8		7.9	6.9	3.5	12.9	12.8	
Level of Service		E		D	E		A	A	A	B	B	
Approach Delay (s)		66.6			56.5			5.7			12.8	
Approach LOS		E			E			A			B	

Intersection Summary			
HCM Average Control Delay	15.5	HCM Level of Service	B
HCM Volume to Capacity ratio	0.74		
Actuated Cycle Length (s)	150.0	Sum of lost time (s)	18.0
Intersection Capacity Utilization	72.9%	ICU Level of Service	C
Analysis Period (min)	15		
c Critical Lane Group			

Movement	EBL	EBT	EBR	WBL	WBT	WBR	NBL	NBT	NBR	SBL	SBT	SBR
Lane Configurations												
Volume (vph)	10	849	60	0	339	46	39	56	0	58	207	33
Ideal Flow (vphpl)	1900	1900	1900	1900	1900	1900	1900	1900	1900	1900	1900	1900
Total Lost time (s)	6.0	6.0			6.0		6.0	6.0		6.0	6.0	
Lane Util. Factor	1.00	0.95			0.95		1.00	0.95		1.00	0.95	
Frt	1.00	0.99			0.98		1.00	1.00		1.00	0.98	
Flt Protected	0.95	1.00			1.00		0.95	1.00		0.95	1.00	
Satd. Flow (prot)	1770	3504			3476		1770	3539		1770	3466	
Flt Permitted	0.37	1.00			1.00		0.95	1.00		0.95	1.00	
Satd. Flow (perm)	694	3504			3476		1770	3539		1770	3466	
Peak-hour factor, PHF	0.95	0.95	0.95	0.95	0.95	0.95	0.95	0.95	0.95	0.95	0.95	0.95
Adj. Flow (vph)	11	894	63	0	357	48	41	59	0	61	218	35
RTOR Reduction (vph)	0	4	0	0	9	0	0	0	0	0	8	0
Lane Group Flow (vph)	11	953	0	0	396	0	41	59	0	61	245	0
Turn Type	pm+pt			pm+pt			Prot			Prot		
Protected Phases	7	4		3	8		5	2		1	6	
Permitted Phases	4			8								
Actuated Green, G (s)	53.9	53.9			45.2		54.7	68.9		9.2	23.4	
Effective Green, g (s)	53.9	53.9			45.2		54.7	68.9		9.2	23.4	
Actuated g/C Ratio	0.36	0.36			0.30		0.36	0.46		0.06	0.16	
Clearance Time (s)	6.0	6.0			6.0		6.0	6.0		6.0	6.0	
Vehicle Extension (s)	3.0	3.0			3.0		3.0	3.0		3.0	3.0	
Lane Grp Cap (vph)	269	1259			1047		645	1626		109	541	
v/s Ratio Prot	0.00	c0.27			0.11		c0.02	0.02		c0.03	c0.07	
v/s Ratio Perm	0.01											
v/c Ratio	0.04	0.76			0.38		0.06	0.04		0.56	0.45	
Uniform Delay, d1	31.6	42.3			41.3		31.0	22.3		68.4	57.5	
Progression Factor	0.88	0.76			0.73		0.85	1.15		1.00	1.00	
Incremental Delay, d2	0.1	2.3			0.2		0.2	0.0		6.1	0.6	
Delay (s)	27.9	34.3			30.2		26.5	25.8		74.5	58.1	
Level of Service	C	C			C		C	C		E	E	
Approach Delay (s)		34.2			30.2			26.1			61.3	
Approach LOS		C			C			C			E	

Intersection Summary			
HCM Average Control Delay	37.6	HCM Level of Service	D
HCM Volume to Capacity ratio	0.45		
Actuated Cycle Length (s)	150.0	Sum of lost time (s)	18.0
Intersection Capacity Utilization	50.5%	ICU Level of Service	A
Analysis Period (min)	15		
c Critical Lane Group			

Movement	EBL	EBT	EBR	WBL	WBT	WBR	NBL	NBT	NBR	SBL	SBT	SBR
Lane Configurations												
Volume (vph)	26	231	114	582	449	23	55	149	266	10	240	15
Ideal Flow (vphpl)	1900	1900	1900	1900	1900	1900	1900	1900	1900	1900	1900	1900
Total Lost time (s)	6.0	6.0		6.0	6.0		6.0	6.0		6.0	6.0	
Lane Util. Factor	1.00	0.95		1.00	0.95		1.00	1.00		1.00	1.00	
Frt	1.00	0.95		1.00	0.99		1.00	0.90		1.00	0.99	
Flt Protected	0.95	1.00		0.95	1.00		0.95	1.00		0.95	1.00	
Satd. Flow (prot)	1593	3027		1593	3162		1593	1515		1593	1662	
Flt Permitted	0.95	1.00		0.95	1.00		0.95	1.00		0.95	1.00	
Satd. Flow (perm)	1593	3027		1593	3162		1593	1515		1593	1662	
Peak-hour factor, PHF	0.95	0.95	0.95	0.95	0.95	0.95	0.95	0.95	0.95	0.95	0.95	0.95
Adj. Flow (vph)	27	243	120	613	473	24	58	157	280	11	253	16
RTOR Reduction (vph)	0	41	0	0	2	0	0	40	0	0	1	0
Lane Group Flow (vph)	27	322	0	613	495	0	58	397	0	11	268	0
Turn Type	Prot			Prot			Prot			Prot		
Protected Phases	5	2		1	6		3	8		7	4	
Permitted Phases												
Actuated Green, G (s)	16.0	16.3		59.1	59.4		8.4	47.8		2.8	42.2	
Effective Green, g (s)	16.0	16.3		59.1	59.4		8.4	47.8		2.8	42.2	
Actuated g/C Ratio	0.11	0.11		0.39	0.40		0.06	0.32		0.02	0.28	
Clearance Time (s)	6.0	6.0		6.0	6.0		6.0	6.0		6.0	6.0	
Vehicle Extension (s)	3.0	3.0		3.0	3.0		3.0	3.0		3.0	3.0	
Lane Grp Cap (vph)	170	329		628	1252		89	483		30	468	
v/s Ratio Prot	0.02	c0.11		c0.38	0.16		c0.04	c0.26		0.01	0.16	
v/s Ratio Perm												
v/c Ratio	0.16	0.98		0.98	0.40		0.65	0.82		0.37	0.57	
Uniform Delay, d1	60.9	66.7		44.8	32.4		69.4	47.2		72.7	46.2	
Progression Factor	0.60	1.07		0.75	0.52		1.00	1.00		1.00	1.00	
Incremental Delay, d2	1.9	44.0		28.8	0.9		15.8	10.9		7.4	5.0	
Delay (s)	38.2	115.3		62.3	17.7		85.2	58.0		80.2	51.2	
Level of Service	D	F		E	B		F	E		F	D	
Approach Delay (s)		110.0			42.3			61.2			52.3	
Approach LOS		F			D			E			D	

Intersection Summary			
HCM Average Control Delay	59.3	HCM Level of Service	E
HCM Volume to Capacity ratio	0.93		
Actuated Cycle Length (s)	150.0	Sum of lost time (s)	24.0
Intersection Capacity Utilization	97.2%	ICU Level of Service	F
Analysis Period (min)	15		
c Critical Lane Group			

Movement	EBL	EBT	EBR	WBL	WBT	WBR	NBL	NBT	NBR	SBL	SBT	SBR
Lane Configurations												
Volume (vph)	5	0	6	189	0	18	32	1435	428	123	2180	37
Ideal Flow (vphpl)	1900	1900	1900	1900	1900	1900	1900	1900	1900	1900	1900	1900
Total Lost time (s)		6.0		6.0		6.0	6.0	6.0		6.0	6.0	
Lane Util. Factor		1.00		1.00		1.00	1.00	0.91		1.00	0.91	
Frt		0.93		1.00		0.85	1.00	0.97		1.00	1.00	
Flt Protected		0.98		0.95		1.00	0.95	1.00		0.95	1.00	
Satd. Flow (prot)		1687		1770		1583	1770	4910		1770	5073	
Flt Permitted		0.98		0.95		1.00	0.04	1.00		0.07	1.00	
Satd. Flow (perm)		1687		1770		1583	78	4910		138	5073	
Peak-hour factor, PHF	0.95	0.95	0.95	0.95	0.95	0.95	0.95	0.95	0.95	0.95	0.95	0.95
Adj. Flow (vph)	5	0	6	199	0	19	34	1511	451	129	2295	39
RTOR Reduction (vph)	0	6	0	0	0	16	0	34	0	0	1	0
Lane Group Flow (vph)	0	5	0	199	0	3	34	1928	0	129	2333	0
Turn Type	Split			custom		custom	Perm			Perm		
Protected Phases	4	4		8				2			6	
Permitted Phases				8		8	2			6		
Actuated Green, G (s)		7.6		21.8		21.8	102.6	102.6		102.6	102.6	
Effective Green, g (s)		7.6		21.8		21.8	102.6	102.6		102.6	102.6	
Actuated g/C Ratio		0.05		0.15		0.15	0.68	0.68		0.68	0.68	
Clearance Time (s)		6.0		6.0		6.0	6.0	6.0		6.0	6.0	
Vehicle Extension (s)		3.0		3.0		3.0	3.0	3.0		3.0	3.0	
Lane Grp Cap (vph)		85		257		230	53	3358		94	3470	
v/s Ratio Prot		c0.00		c0.11				0.39			0.46	
v/s Ratio Perm						0.00	0.43			c0.93		
v/c Ratio		0.06		0.77		0.01	0.64	0.57		1.37	0.67	
Uniform Delay, d1		67.8		61.7		54.9	13.3	12.3		23.7	13.9	
Progression Factor		1.00		0.87		1.03	0.93	0.29		1.08	0.71	
Incremental Delay, d2		0.3		6.4		0.0	37.9	0.6		210.9	0.8	
Delay (s)		68.1		60.2		56.3	50.4	4.2		236.4	10.7	
Level of Service		E		E		E	D	A		F	B	
Approach Delay (s)		68.1			59.8			4.9			22.5	
Approach LOS		E			E			A			C	

Intersection Summary			
HCM Average Control Delay	16.9	HCM Level of Service	B
HCM Volume to Capacity ratio	1.19		
Actuated Cycle Length (s)	150.0	Sum of lost time (s)	18.0
Intersection Capacity Utilization	76.7%	ICU Level of Service	D
Analysis Period (min)	15		
c Critical Lane Group			

Movement	EBL	EBT	EBR	WBL	WBT	WBR	NBL	NBT	NBR	SBL	SBT	SBR
Lane Configurations												
Volume (vph)	167	32	140	339	6	0	164	1694	348	233	2071	69
Ideal Flow (vphpl)	1900	1900	1900	1900	1900	1900	1900	1900	1900	1900	1900	1900
Total Lost time (s)	6.0	6.0		6.0	6.0		6.0	6.0	6.0	6.0	6.0	
Lane Util. Factor	0.97	0.95		0.97	0.95		1.00	0.91	1.00	1.00	0.91	
Frt	1.00	0.88		1.00	1.00		1.00	1.00	0.85	1.00	1.00	
Flt Protected	0.95	1.00		0.95	1.00		0.95	1.00	1.00	0.95	1.00	
Satd. Flow (prot)	3433	3108		3433	3539		1770	5085	1583	1770	5061	
Flt Permitted	0.95	1.00		0.95	1.00		0.05	1.00	1.00	0.05	1.00	
Satd. Flow (perm)	3433	3108		3433	3539		101	5085	1583	102	5061	
Peak-hour factor, PHF	0.95	0.95	0.95	0.95	0.95	0.95	0.95	0.95	0.95	0.95	0.95	0.95
Adj. Flow (vph)	176	34	147	357	6	0	173	1783	366	245	2180	73
RTOR Reduction (vph)	0	134	0	0	0	0	0	0	137	0	2	0
Lane Group Flow (vph)	176	47	0	357	6	0	173	1783	229	245	2251	0
Turn Type	Prot			Prot		Perm	pm+pt		Perm	pm+pt		
Protected Phases	7	4		3	8		5	2		1	6	
Permitted Phases						8	2		2	6		
Actuated Green, G (s)	23.2	13.6		18.4	8.8		87.4	73.9	73.9	100.0	80.5	
Effective Green, g (s)	23.2	13.6		18.4	8.8		87.4	73.9	73.9	100.0	80.5	
Actuated g/C Ratio	0.15	0.09		0.12	0.06		0.58	0.49	0.49	0.67	0.54	
Clearance Time (s)	6.0	6.0		6.0	6.0		6.0	6.0	6.0	6.0	6.0	
Vehicle Extension (s)	3.0	3.0		3.0	3.0		3.0	3.0	3.0	3.0	3.0	
Lane Grp Cap (vph)	531	282		421	208		209	2505	780	292	2716	
v/s Ratio Prot	0.05	c0.02		c0.10	0.00		0.07	0.35		c0.11	c0.44	
v/s Ratio Perm							0.41		0.14	c0.45		
v/c Ratio	0.33	0.17		0.85	0.03		0.83	0.71	0.29	0.84	0.83	
Uniform Delay, d1	56.5	63.0		64.4	66.6		43.3	29.7	22.6	46.1	29.0	
Progression Factor	1.00	1.00		0.60	0.63		1.19	0.53	0.11	0.87	1.22	
Incremental Delay, d2	0.4	0.3		13.3	0.1		19.5	1.5	0.8	14.4	2.3	
Delay (s)	56.9	63.3		51.8	41.7		71.2	17.2	3.4	54.5	37.8	
Level of Service	E	E		D	D		E	B	A	D	D	
Approach Delay (s)		60.1			51.7			19.1			39.4	
Approach LOS		E			D			B			D	

Intersection Summary			
HCM Average Control Delay	33.0	HCM Level of Service	C
HCM Volume to Capacity ratio	0.79		
Actuated Cycle Length (s)	150.0	Sum of lost time (s)	24.0
Intersection Capacity Utilization	85.7%	ICU Level of Service	E
Analysis Period (min)	15		
c Critical Lane Group			

Movement	EBL	EBT	EBR	WBL	WBT	WBR	NBL	NBT	NBR	SBL	SBT	SBR
Lane Configurations												
Volume (vph)	0	0	0	123	12	394	212	2039	0	0	2517	778
Ideal Flow (vphpl)	1900	1900	1900	1900	1900	1900	1900	1900	1900	1900	1900	1900
Total Lost time (s)				6.0	6.0	6.0	6.0	6.0			6.0	6.0
Lane Util. Factor				0.95	0.95	1.00	0.97	0.86			0.81	1.00
Frt				1.00	1.00	0.85	1.00	1.00			1.00	0.85
Flt Protected				0.95	0.96	1.00	0.95	1.00			1.00	1.00
Satd. Flow (prot)				1681	1700	1583	3433	6408			7544	1583
Flt Permitted				0.95	0.96	1.00	0.95	1.00			1.00	1.00
Satd. Flow (perm)				1681	1700	1583	3433	6408			7544	1583
Peak-hour factor, PHF	0.95	0.95	0.95	0.95	0.95	0.95	0.95	0.95	0.95	0.95	0.95	0.95
Adj. Flow (vph)	0	0	0	129	13	415	223	2146	0	0	2649	819
RTOR Reduction (vph)	0	0	0	0	0	5	0	0	0	0	0	409
Lane Group Flow (vph)	0	0	0	71	71	410	223	2146	0	0	2649	410
Turn Type				Perm		Perm	Prot					Perm
Protected Phases					8		5	2			6	
Permitted Phases				8		8						6
Actuated Green, G (s)				43.4	43.4	43.4	13.5	94.6			75.1	75.1
Effective Green, g (s)				43.4	43.4	43.4	13.5	94.6			75.1	75.1
Actuated g/C Ratio				0.29	0.29	0.29	0.09	0.63			0.50	0.50
Clearance Time (s)				6.0	6.0	6.0	6.0	6.0			6.0	6.0
Vehicle Extension (s)				3.0	3.0	3.0	3.0	3.0			3.0	3.0
Lane Grp Cap (vph)				486	492	458	309	4041			3777	793
v/s Ratio Prot							c0.06	0.33			c0.35	
v/s Ratio Perm				0.04	0.04	c0.26						0.26
v/c Ratio				0.15	0.14	0.90	0.72	0.53			0.70	0.52
Uniform Delay, d1				39.6	39.5	51.1	66.4	15.4			28.8	25.2
Progression Factor				1.00	1.00	1.00	1.43	0.56			0.60	0.28
Incremental Delay, d2				0.1	0.1	19.6	7.3	0.5			0.9	1.9
Delay (s)				39.7	39.7	70.7	102.0	9.1			18.3	9.0
Level of Service				D	D	E	F	A			B	A
Approach Delay (s)		0.0			62.8			17.8			16.1	
Approach LOS		A			E			B			B	

Intersection Summary			
HCM Average Control Delay	20.8	HCM Level of Service	C
HCM Volume to Capacity ratio	0.77		
Actuated Cycle Length (s)	150.0	Sum of lost time (s)	18.0
Intersection Capacity Utilization	74.1%	ICU Level of Service	D
Analysis Period (min)	15		
c Critical Lane Group			

Movement	EBL	EBT	EBR	WBL	WBT	WBR	NBL	NBT	NBR	SBL	SBT	SBR
Lane Configurations												
Volume (vph)	261	0	441	0	0	0	0	2039	126	224	2517	0
Ideal Flow (vphpl)	1900	1900	1900	1900	1900	1900	1900	1900	1900	1900	1900	1900
Total Lost time (s)	6.0		6.0					6.0		6.0	6.0	
Lane Util. Factor	0.97		0.88					0.76		0.97	0.91	
Frt	1.00		0.85					0.99		1.00	1.00	
Flt Protected	0.95		1.00					1.00		0.95	1.00	
Satd. Flow (prot)	3433		2787					8420		3433	5085	
Flt Permitted	0.95		1.00					1.00		0.95	1.00	
Satd. Flow (perm)	3433		2787					8420		3433	5085	
Peak-hour factor, PHF	0.95	0.95	0.95	0.95	0.95	0.95	0.95	0.95	0.95	0.95	0.95	0.95
Adj. Flow (vph)	275	0	464	0	0	0	0	2146	133	236	2649	0
RTOR Reduction (vph)	0	0	6	0	0	0	0	6	0	0	0	0
Lane Group Flow (vph)	275	0	458	0	0	0	0	2273	0	236	2649	0
Turn Type	custom		custom							Prot		
Protected Phases								2		1	6	
Permitted Phases	4		4									
Actuated Green, G (s)	30.5		30.5					86.2		15.3	107.5	
Effective Green, g (s)	30.5		30.5					86.2		15.3	107.5	
Actuated g/C Ratio	0.20		0.20					0.57		0.10	0.72	
Clearance Time (s)	6.0		6.0					6.0		6.0	6.0	
Vehicle Extension (s)	3.0		3.0					3.0		3.0	3.0	
Lane Grp Cap (vph)	698		567					4839		350	3644	
v/s Ratio Prot								0.27		0.07	c0.52	
v/s Ratio Perm	0.08		c0.16									
v/c Ratio	0.39		0.81					0.47		0.67	0.73	
Uniform Delay, d1	51.7		56.9					18.6		64.9	12.6	
Progression Factor	1.00		1.00					1.00		1.37	0.89	
Incremental Delay, d2	0.4		8.2					0.3		3.9	1.0	
Delay (s)	52.1		65.2					18.9		92.8	12.1	
Level of Service	D		E					B		F	B	
Approach Delay (s)		60.3			0.0			18.9			18.7	
Approach LOS		E			A			B			B	

Intersection Summary			
HCM Average Control Delay	24.0	HCM Level of Service	C
HCM Volume to Capacity ratio	0.74		
Actuated Cycle Length (s)	150.0	Sum of lost time (s)	12.0
Intersection Capacity Utilization	74.1%	ICU Level of Service	D
Analysis Period (min)	15		
c Critical Lane Group			

Movement	WBL	WBR	NBT	NBR	SBL	SBT
Lane Configurations						
Volume (vph)	75	72	283	65	148	1369
Ideal Flow (vphpl)	1900	1900	1900	1900	1900	1900
Total Lost time (s)	6.0		6.0			6.0
Lane Util. Factor	1.00		0.95			0.95
Frt	0.93		0.97			1.00
Flt Protected	0.98		1.00			1.00
Satd. Flow (prot)	1696		3441			3522
Flt Permitted	0.98		1.00			0.84
Satd. Flow (perm)	1696		3441			2973
Peak-hour factor, PHF	0.95	0.95	0.95	0.95	0.95	0.95
Adj. Flow (vph)	79	76	298	68	156	1441
RTOR Reduction (vph)	24	0	8	0	0	0
Lane Group Flow (vph)	131	0	358	0	0	1597
Turn Type					pm+pt	
Protected Phases	8		2		1	6
Permitted Phases					6	
Actuated Green, G (s)	16.8		121.2			121.2
Effective Green, g (s)	16.8		121.2			121.2
Actuated g/C Ratio	0.11		0.81			0.81
Clearance Time (s)	6.0		6.0			6.0
Vehicle Extension (s)	3.0		3.0			3.0
Lane Grp Cap (vph)	190		2780			2402
v/s Ratio Prot	c0.08		0.10			
v/s Ratio Perm						c0.54
v/c Ratio	0.69		0.13			0.66
Uniform Delay, d1	64.1		3.1			6.0
Progression Factor	1.00		0.06			0.41
Incremental Delay, d2	10.0		0.1			0.1
Delay (s)	74.1		0.2			2.5
Level of Service	E		A			A
Approach Delay (s)	74.1		0.2			2.5
Approach LOS	E		A			A

Intersection Summary			
HCM Average Control Delay	7.3	HCM Level of Service	A
HCM Volume to Capacity ratio	0.67		
Actuated Cycle Length (s)	150.0	Sum of lost time (s)	12.0
Intersection Capacity Utilization	75.6%	ICU Level of Service	D
Analysis Period (min)	15		
c Critical Lane Group			

Movement	EBL	EBT	EBR	WBL	WBT	WBR	NBL	NBT	NBR	SBL	SBT	SBR
Lane Configurations												
Volume (vph)	99	27	32	26	56	41	167	1581	55	37	3008	80
Ideal Flow (vphpl)	1900	1900	1900	1900	1900	1900	1900	1900	1900	1900	1900	1900
Total Lost time (s)		6.0	6.0		6.0		6.0	6.0		6.0	6.0	
Lane Util. Factor		1.00	1.00		1.00		1.00	0.86		1.00	0.86	
Frt		1.00	0.85		0.95		1.00	0.99		1.00	1.00	
Flt Protected		0.96	1.00		0.99		0.95	1.00		0.95	1.00	
Satd. Flow (prot)		1792	1583		1760		1770	6375		1770	6383	
Flt Permitted		0.56	1.00		0.86		0.95	1.00		0.95	1.00	
Satd. Flow (perm)		1050	1583		1532		1770	6375		1770	6383	
Peak-hour factor, PHF	0.95	0.95	0.95	0.95	0.95	0.95	0.95	0.95	0.95	0.95	0.95	0.95
Adj. Flow (vph)	104	28	34	27	59	43	176	1664	58	39	3166	84
RTOR Reduction (vph)	0	0	29	0	13	0	0	3	0	0	2	0
Lane Group Flow (vph)	0	132	5	0	116	0	176	1719	0	39	3248	0
Turn Type	Perm		Perm	Perm			Prot			Prot		
Protected Phases		4			8		5	2		1	6	
Permitted Phases	4		4	8								
Actuated Green, G (s)		22.6	22.6		22.6		18.6	102.6		6.8	90.8	
Effective Green, g (s)		22.6	22.6		22.6		18.6	102.6		6.8	90.8	
Actuated g/C Ratio		0.15	0.15		0.15		0.12	0.68		0.05	0.61	
Clearance Time (s)		6.0	6.0		6.0		6.0	6.0		6.0	6.0	
Vehicle Extension (s)		3.0	3.0		3.0		3.0	3.0		3.0	3.0	
Lane Grp Cap (vph)		158	239		231		219	4361		80	3864	
v/s Ratio Prot							c0.10	0.27		0.02	c0.51	
v/s Ratio Perm		c0.13	0.00		0.08							
v/c Ratio		0.84	0.02		0.50		0.80	0.39		0.49	0.84	
Uniform Delay, d1		61.9	54.3		58.5		63.9	10.3		69.9	23.8	
Progression Factor		1.00	1.00		1.00		1.04	0.23		0.80	1.06	
Incremental Delay, d2		30.0	0.0		1.7		8.8	0.1		2.3	1.2	
Delay (s)		91.9	54.3		60.3		75.3	2.5		58.1	26.4	
Level of Service		F	D		E		E	A		E	C	
Approach Delay (s)		84.2			60.3			9.3			26.8	
Approach LOS		F			E			A			C	

Intersection Summary			
HCM Average Control Delay	23.3	HCM Level of Service	C
HCM Volume to Capacity ratio	0.83		
Actuated Cycle Length (s)	150.0	Sum of lost time (s)	18.0
Intersection Capacity Utilization	82.7%	ICU Level of Service	E
Analysis Period (min)	15		
c Critical Lane Group			

Movement	WBL	WBR	NBT	NBR	SBL	SBT
Lane Configurations						
Volume (veh/h)	0	49	894	183	0	2468
Sign Control	Stop		Free			Free
Grade	0%		0%			0%
Peak Hour Factor	0.95	0.95	0.95	0.95	0.95	0.95
Hourly flow rate (vph)	0	52	941	193	0	2598
Pedestrians						
Lane Width (ft)						
Walking Speed (ft/s)						
Percent Blockage						
Right turn flare (veh)						
Median type			None			None
Median storage veh)						
Upstream signal (ft)			1039			442
pX, platoon unblocked	0.80	0.89			0.89	
vC, conflicting volume	1903	410			1134	
vC1, stage 1 conf vol						
vC2, stage 2 conf vol						
vCu, unblocked vol	309	0			702	
tC, single (s)	6.8	6.9			4.1	
tC, 2 stage (s)						
tF (s)	3.5	3.3			2.2	
p0 queue free %	100	95			100	
cM capacity (veh/h)	529	961			790	

Direction, Lane #	WB 1	NB 1	NB 2	NB 3	SB 1	SB 2	SB 3
Volume Total	52	376	376	381	866	866	866
Volume Left	0	0	0	0	0	0	0
Volume Right	52	0	0	193	0	0	0
cSH	961	1700	1700	1700	1700	1700	1700
Volume to Capacity	0.05	0.22	0.22	0.22	0.51	0.51	0.51
Queue Length 95th (ft)	4	0	0	0	0	0	0
Control Delay (s)	9.0	0.0	0.0	0.0	0.0	0.0	0.0
Lane LOS	A						
Approach Delay (s)	9.0	0.0			0.0		
Approach LOS	A						

Intersection Summary			
Average Delay	0.1		
Intersection Capacity Utilization	51.0%	ICU Level of Service	A
Analysis Period (min)	15		

Movement	EBL	EBT	EBR	WBL	WBT	WBR	NBL	NBT	NBR	SBL	SBT	SBR
Lane Configurations												
Volume (vph)	83	54	21	21	11	28	52	1521	40	77	2858	61
Ideal Flow (vphpl)	1900	1900	1900	1900	1900	1900	1900	1900	1900	1900	1900	1900
Total Lost time (s)	6.0	6.0		6.0	6.0		6.0	6.0		6.0	6.0	
Lane Util. Factor	1.00	1.00		1.00	1.00		1.00	0.91		1.00	0.91	
Frt	1.00	0.96		1.00	0.89		1.00	1.00		1.00	1.00	
Flt Protected	0.95	1.00		0.95	1.00		0.95	1.00		0.95	1.00	
Satd. Flow (prot)	1770	1785		1770	1665		1770	5066		1770	5069	
Flt Permitted	0.95	1.00		0.95	1.00		0.95	1.00		0.95	1.00	
Satd. Flow (perm)	1770	1785		1770	1665		1770	5066		1770	5069	
Peak-hour factor, PHF	0.95	0.95	0.95	0.95	0.95	0.95	0.95	0.95	0.95	0.95	0.95	0.95
Adj. Flow (vph)	87	57	22	22	12	29	55	1601	42	81	3008	64
RTOR Reduction (vph)	0	9	0	0	27	0	0	2	0	0	1	0
Lane Group Flow (vph)	87	70	0	22	14	0	55	1641	0	81	3071	0
Turn Type	Split			Split			Prot			Prot		
Protected Phases	4	4		8	8		5	2		1	6	
Permitted Phases												
Actuated Green, G (s)	12.6	12.6		9.1	9.1		8.2	93.1		11.2	96.1	
Effective Green, g (s)	12.6	12.6		9.1	9.1		8.2	93.1		11.2	96.1	
Actuated g/C Ratio	0.08	0.08		0.06	0.06		0.05	0.62		0.07	0.64	
Clearance Time (s)	6.0	6.0		6.0	6.0		6.0	6.0		6.0	6.0	
Vehicle Extension (s)	3.0	3.0		3.0	3.0		3.0	3.0		3.0	3.0	
Lane Grp Cap (vph)	149	150		107	101		97	3144		132	3248	
v/s Ratio Prot	c0.05	0.04		c0.01	0.01		0.03	0.32		c0.05	c0.61	
v/s Ratio Perm												
v/c Ratio	0.58	0.47		0.21	0.14		0.57	0.52		0.61	0.95	
Uniform Delay, d1	66.2	65.5		67.0	66.7		69.2	16.0		67.3	24.6	
Progression Factor	1.00	1.00		1.00	1.00		1.05	0.23		1.25	0.58	
Incremental Delay, d2	5.7	2.3		1.0	0.6		6.6	0.6		0.8	0.8	
Delay (s)	71.9	67.8		68.0	67.3		79.3	4.2		85.0	15.1	
Level of Service	E	E		E	E		E	A		F	B	
Approach Delay (s)		69.9			67.6			6.6			16.9	
Approach LOS		E			E			A			B	

Intersection Summary			
HCM Average Control Delay	15.8	HCM Level of Service	B
HCM Volume to Capacity ratio	0.85		
Actuated Cycle Length (s)	150.0	Sum of lost time (s)	24.0
Intersection Capacity Utilization	85.3%	ICU Level of Service	E
Analysis Period (min)	15		
c Critical Lane Group			

Movement	EBL	EBT	EBR	WBL	WBT	WBR	NBL	NBT	NBR	SBL	SBT	SBR
Lane Configurations												
Volume (veh/h)	137	40	10	6	91	10	6	125	6	10	132	60
Sign Control		Free			Free			Stop			Stop	
Grade		0%			0%			0%			0%	
Peak Hour Factor	0.95	0.95	0.95	0.95	0.95	0.95	0.95	0.95	0.95	0.95	0.95	0.95
Hourly flow rate (vph)	144	42	11	6	96	11	6	132	6	11	139	63
Pedestrians												
Lane Width (ft)												
Walking Speed (ft/s)												
Percent Blockage												
Right turn flare (veh)												
Median type		None			None							
Median storage veh)												
Upstream signal (ft)		1018										
pX, platoon unblocked												
vC, conflicting volume	106			53			577	455	47	516	455	101
vC1, stage 1 conf vol												
vC2, stage 2 conf vol												
vCu, unblocked vol	106			53			577	455	47	516	455	101
tC, single (s)	4.1			4.1			7.1	6.5	6.2	7.1	6.5	6.2
tC, 2 stage (s)												
tF (s)	2.2			2.2			3.5	4.0	3.3	3.5	4.0	3.3
p0 queue free %	90			100			98	71	99	97	69	93
cM capacity (veh/h)	1485			1553			282	451	1022	335	451	954

Direction, Lane #	EB 1	EB 2	WB 1	WB 2	NB 1	NB 2	SB 1
Volume Total	144	53	6	106	6	138	213
Volume Left	144	0	6	0	6	0	11
Volume Right	0	11	0	11	0	6	63
cSH	1485	1700	1553	1700	282	463	524
Volume to Capacity	0.10	0.03	0.00	0.06	0.02	0.30	0.41
Queue Length 95th (ft)	8	0	0	0	2	31	49
Control Delay (s)	7.7	0.0	7.3	0.0	18.1	16.1	16.5
Lane LOS	A		A		C	C	C
Approach Delay (s)	5.6		0.4		16.1		16.5
Approach LOS					C		C

Intersection Summary			
Average Delay	10.5		
Intersection Capacity Utilization	40.0%	ICU Level of Service	A
Analysis Period (min)	15		

Movement	EBL	EBT	EBR	WBL	WBT	WBR	NBL	NBT	NBR	SBL	SBT	SBR
Lane Configurations												
Volume (vph)	205	443	86	72	397	87	48	4	45	16	33	66
Ideal Flow (vphpl)	1900	1900	1900	1900	1900	1900	1900	1900	1900	1900	1900	1900
Total Lost time (s)	6.0	6.0	6.0	6.0	6.0			6.0	6.0	6.0	6.0	
Lane Util. Factor	1.00	0.95	1.00	1.00	0.95			1.00	1.00	1.00	1.00	
Frt	1.00	1.00	0.85	1.00	0.97			1.00	0.85	1.00	0.90	
Flt Protected	0.95	1.00	1.00	0.95	1.00			0.96	1.00	0.95	1.00	
Satd. Flow (prot)	1770	3539	1583	1770	3443			1780	1583	1770	1677	
Flt Permitted	0.46	1.00	1.00	0.36	1.00			0.73	1.00	0.72	1.00	
Satd. Flow (perm)	865	3539	1583	672	3443			1358	1583	1343	1677	
Peak-hour factor, PHF	0.95	0.95	0.95	0.95	0.95	0.95	0.95	0.95	0.95	0.95	0.95	0.95
Adj. Flow (vph)	216	466	91	76	418	92	51	4	47	17	35	69
RTOR Reduction (vph)	0	0	61	0	32	0	0	0	30	0	45	0
Lane Group Flow (vph)	216	466	30	76	478	0	0	55	17	17	59	0
Turn Type	Perm		Perm	pm+pt			Perm		Perm	Perm		
Protected Phases		4		3	8			2			6	
Permitted Phases	4		4	8			2		2	6		
Actuated Green, G (s)	24.9	24.9	24.9	36.4	36.4			26.6	26.6	26.6	26.6	
Effective Green, g (s)	24.9	24.9	24.9	36.4	36.4			26.6	26.6	26.6	26.6	
Actuated g/C Ratio	0.33	0.33	0.33	0.49	0.49			0.35	0.35	0.35	0.35	
Clearance Time (s)	6.0	6.0	6.0	6.0	6.0			6.0	6.0	6.0	6.0	
Vehicle Extension (s)	3.0	3.0	3.0	3.0	3.0			3.0	3.0	3.0	3.0	
Lane Grp Cap (vph)	287	1175	526	407	1671			482	561	476	595	
v/s Ratio Prot		0.13		0.01	c0.14						0.04	
v/s Ratio Perm	c0.25		0.02	0.08				c0.04	0.01	0.01		
v/c Ratio	0.75	0.40	0.06	0.19	0.29			0.11	0.03	0.04	0.10	
Uniform Delay, d1	22.3	19.3	17.1	10.8	11.5			16.3	15.8	15.8	16.2	
Progression Factor	1.30	1.16	3.42	0.81	0.98			1.00	1.00	0.99	0.98	
Incremental Delay, d2	6.9	0.1	0.0	0.2	0.1			0.5	0.1	0.1	0.3	
Delay (s)	35.8	22.5	58.4	9.0	11.4			16.8	15.9	15.9	16.3	
Level of Service	D	C	E	A	B			B	B	B	B	
Approach Delay (s)		30.5			11.1			16.4			16.2	
Approach LOS		C			B			B			B	

Intersection Summary			
HCM Average Control Delay	21.3	HCM Level of Service	C
HCM Volume to Capacity ratio	0.43		
Actuated Cycle Length (s)	75.0	Sum of lost time (s)	18.0
Intersection Capacity Utilization	49.6%	ICU Level of Service	A
Analysis Period (min)	15		
c Critical Lane Group			

Movement	EBL	EBT	EBR	WBL	WBT	WBR	NBL	NBT	NBR	SBL	SBT	SBR
Lane Configurations												
Volume (vph)	46	2	222	76	8	162	63	1398	138	286	2379	26
Ideal Flow (vphpl)	1900	1900	1900	1900	1900	1900	1900	1900	1900	1900	1900	1900
Total Lost time (s)		6.0		6.0	6.0	6.0	6.0	6.0	6.0	6.0	6.0	6.0
Lane Util. Factor		0.95		1.00	1.00	1.00	1.00	0.91	1.00	1.00	0.91	1.00
Frt		0.88		1.00	1.00	0.85	1.00	1.00	0.85	1.00	1.00	0.85
Flt Protected		0.99		0.95	1.00	1.00	0.95	1.00	1.00	0.95	1.00	1.00
Satd. Flow (prot)		3076		1770	1863	1583	1770	5085	1583	1770	5085	1583
Flt Permitted		0.90		0.22	1.00	1.00	0.05	1.00	1.00	0.11	1.00	1.00
Satd. Flow (perm)		2785		410	1863	1583	92	5085	1583	205	5085	1583
Peak-hour factor, PHF	0.95	0.95	0.95	0.95	0.95	0.95	0.95	0.95	0.95	0.95	0.95	0.95
Adj. Flow (vph)	48	2	234	80	8	171	66	1472	145	301	2504	27
RTOR Reduction (vph)	0	109	0	0	0	138	0	0	62	0	0	7
Lane Group Flow (vph)	0	175	0	80	8	33	66	1472	83	301	2504	20
Turn Type	Perm			pm+pt		Perm	pm+pt		Perm	pm+pt		Perm
Protected Phases		4		3	8		5	2		1	6	
Permitted Phases	4			8		8	2		2	6		6
Actuated Green, G (s)		13.9		29.0	29.0	29.0	86.5	80.6	80.6	109.0	97.1	97.1
Effective Green, g (s)		13.9		29.0	29.0	29.0	86.5	80.6	80.6	109.0	97.1	97.1
Actuated g/C Ratio		0.09		0.19	0.19	0.19	0.58	0.54	0.54	0.73	0.65	0.65
Clearance Time (s)		6.0		6.0	6.0	6.0	6.0	6.0	6.0	6.0	6.0	6.0
Vehicle Extension (s)		3.0		3.0	3.0	3.0	3.0	3.0	3.0	3.0	3.0	3.0
Lane Grp Cap (vph)		258		162	360	306	119	2732	851	383	3292	1025
v/s Ratio Prot				c0.03	0.00		0.02	0.29		c0.12	c0.49	
v/s Ratio Perm		c0.06		0.07		0.02	0.30		0.05	c0.46		0.01
v/c Ratio		0.91dr		0.49	0.02	0.11	0.55	0.54	0.10	0.79	0.76	0.02
Uniform Delay, d1		65.9		51.7	49.0	49.8	20.1	22.6	16.9	30.3	18.4	9.4
Progression Factor		0.59		1.00	1.00	1.00	1.17	0.70	0.60	2.33	0.86	0.02
Incremental Delay, d2		6.4		2.4	0.0	0.2	5.0	0.7	0.2	1.0	0.2	0.0
Delay (s)		45.1		54.0	49.0	50.0	28.5	16.5	10.4	71.6	15.9	0.2
Level of Service		D		D	D	D	C	B	B	E	B	A
Approach Delay (s)		45.1			51.2			16.5			21.7	
Approach LOS		D			D			B			C	

Intersection Summary			
HCM Average Control Delay	22.8	HCM Level of Service	C
HCM Volume to Capacity ratio	0.78		
Actuated Cycle Length (s)	150.0	Sum of lost time (s)	24.0
Intersection Capacity Utilization	82.3%	ICU Level of Service	E
Analysis Period (min)	15		

dr Defacto Right Lane. Recode with 1 though lane as a right lane.
c Critical Lane Group

Movement	NBL	NBT	NBR2	SBL	SBT	SBR2	NEL	NER2	SWL	SWR2
Lane Configurations										
Volume (vph)	694	115	218	270	208	69	10	225	547	183
Ideal Flow (vphpl)	1900	1900	1900	1900	1900	1900	1900	1900	1900	1900
Total Lost time (s)	6.0	6.0	6.0	6.0	6.0	6.0	6.0	6.0	6.0	6.0
Lane Util. Factor	0.97	0.95	1.00	0.97	0.95	1.00	0.97	1.00	0.97	1.00
Frt	1.00	1.00	0.85	1.00	1.00	0.85	1.00	0.85	1.00	0.85
Flt Protected	0.95	1.00	1.00	0.95	1.00	1.00	0.95	1.00	0.95	1.00
Satd. Flow (prot)	3433	3539	1583	3433	3539	1583	3433	1583	3433	1583
Flt Permitted	0.95	1.00	1.00	0.95	1.00	1.00	0.95	1.00	0.95	1.00
Satd. Flow (perm)	3433	3539	1583	3433	3539	1583	3433	1583	3433	1583
Peak-hour factor, PHF	0.95	0.95	0.95	0.95	0.95	0.95	0.95	0.95	0.95	0.95
Adj. Flow (vph)	731	121	229	284	219	73	11	237	576	193
RTOR Reduction (vph)	0	0	162	0	0	57	0	167	0	152
Lane Group Flow (vph)	731	121	67	284	219	16	11	70	576	41
Turn Type	Prot		Perm	Prot		Perm	Prot	custom	Prot	custom
Protected Phases	5	2		1	6		4		8	
Permitted Phases			2			6		2		6
Actuated Green, G (s)	22.0	22.0	22.0	16.0	16.0	16.0	19.0	22.0	19.0	16.0
Effective Green, g (s)	22.0	22.0	22.0	16.0	16.0	16.0	19.0	22.0	19.0	16.0
Actuated g/C Ratio	0.29	0.29	0.29	0.21	0.21	0.21	0.25	0.29	0.25	0.21
Clearance Time (s)	6.0	6.0	6.0	6.0	6.0	6.0	6.0	6.0	6.0	6.0
Vehicle Extension (s)	3.0	3.0	3.0	3.0	3.0	3.0	3.0	3.0	3.0	3.0
Lane Grp Cap (vph)	1007	1038	464	732	755	338	870	464	870	338
v/s Ratio Prot	c0.21	0.03		0.08	c0.06		0.00		c0.17	
v/s Ratio Perm			0.04			0.01		c0.04		0.03
v/c Ratio	0.73	0.12	0.14	0.39	0.29	0.05	0.01	0.15	0.66	0.12
Uniform Delay, d1	23.8	19.4	19.6	25.3	24.7	23.4	21.0	19.6	25.1	23.8
Progression Factor	1.05	1.01	2.25	1.00	1.00	1.00	0.83	2.51	1.00	1.00
Incremental Delay, d2	4.5	0.2	0.6	1.6	1.0	0.3	0.0	0.6	4.0	0.7
Delay (s)	29.6	19.9	44.7	26.9	25.7	23.7	17.4	49.8	29.1	24.6
Level of Service	C	B	D	C	C	C	B	D	C	C
Approach Delay (s)		31.7			26.0					
Approach LOS		C			C					

Intersection Summary			
HCM Average Control Delay	30.9	HCM Level of Service	C
HCM Volume to Capacity ratio	0.63		
Actuated Cycle Length (s)	75.0	Sum of lost time (s)	24.0
Intersection Capacity Utilization	56.2%	ICU Level of Service	B
Analysis Period (min)	15		
c Critical Lane Group			

HCM Signalized Intersection Capacity Analysis
1: Rollins Ave & MD 355

3/31/2014

Movement	EBL	EBT	EBR	WBL	WBT	WBR	NBL	NBT	NBR	SBL	SBT	SBR
Lane Configurations												
Volume (vph)	0	409	59	0	338	201	106	3132	715	240	2124	48
Ideal Flow (vphpl)	1900	1900	1900	1900	1900	1900	1900	1900	1900	1900	1900	1900
Total Lost time (s)		6.0			6.0		6.0	6.0	6.0	6.0	6.0	
Lane Util. Factor		0.95			0.95		1.00	0.91	1.00	1.00	0.91	
Frt		0.98			0.94		1.00	1.00	0.85	1.00	1.00	
Flt Protected		1.00			1.00		0.95	1.00	1.00	0.95	1.00	
Satd. Flow (prot)		3472			3341		1770	5085	1583	1770	5068	
Flt Permitted		1.00			1.00		0.05	1.00	1.00	0.04	1.00	
Satd. Flow (perm)		3472			3341		88	5085	1583	74	5068	
Peak-hour factor, PHF	0.95	0.95	0.95	0.95	0.95	0.95	0.95	0.95	0.95	0.95	0.95	0.95
Adj. Flow (vph)	0	431	62	0	356	212	112	3297	753	253	2236	51
RTOR Reduction (vph)	0	8	0	0	58	0	0	0	16	0	2	0
Lane Group Flow (vph)	0	485	0	0	510	0	112	3297	737	253	2285	0
Turn Type							pm+pt		Perm	pm+pt		
Protected Phases		4			8		5	2		1	6	
Permitted Phases							2		2	6		
Actuated Green, G (s)		21.0			21.0		104.6	95.0	95.0	117.0	101.4	
Effective Green, g (s)		21.0			21.0		104.6	95.0	95.0	117.0	101.4	
Actuated g/C Ratio		0.14			0.14		0.70	0.63	0.63	0.78	0.68	
Clearance Time (s)		6.0			6.0		6.0	6.0	6.0	6.0	6.0	
Vehicle Extension (s)		3.0			3.0		3.0	3.0	3.0	3.0	3.0	
Lane Grp Cap (vph)		486			468		169	3221	1003	239	3426	
v/s Ratio Prot		0.14			c0.15		0.04	0.65		c0.11	0.45	
v/s Ratio Perm							0.42		0.47	c0.72		
v/c Ratio		1.00			1.09		0.66	1.02	0.74	1.06	0.67	
Uniform Delay, d1		64.5			64.5		27.7	27.5	18.9	69.2	14.3	
Progression Factor		1.00			1.00		1.45	0.57	0.14	1.00	1.00	
Incremental Delay, d2		40.1			67.7		0.9	12.5	0.4	74.5	1.0	
Delay (s)		104.6			132.2		41.0	28.2	3.2	143.7	15.4	
Level of Service		F			F		D	C	A	F	B	
Approach Delay (s)		104.6			132.2			24.0			28.2	
Approach LOS		F			F			C			C	

Intersection Summary			
HCM Average Control Delay	38.4	HCM Level of Service	D
HCM Volume to Capacity ratio	1.04		
Actuated Cycle Length (s)	150.0	Sum of lost time (s)	12.0
Intersection Capacity Utilization	104.6%	ICU Level of Service	G
Analysis Period (min)	15		
c Critical Lane Group			

Movement	EBL	EBT	EBR	WBL	WBT	WBR	NBL	NBT	NBR	SBL	SBT	SBR
Lane Configurations												
Volume (vph)	40	60	40	784	25	114	40	3642	400	195	1927	10
Ideal Flow (vphpl)	1900	1900	1900	1900	1900	1900	1900	1900	1900	1900	1900	1900
Total Lost time (s)		6.0	6.0	6.0	6.0		6.0	6.0	6.0	6.0	6.0	
Lane Util. Factor		1.00	1.00	0.97	1.00		1.00	0.91	1.00	1.00	0.91	
Frt		1.00	0.85	1.00	0.88		1.00	1.00	0.85	1.00	1.00	
Flt Protected		0.98	1.00	0.95	1.00		0.95	1.00	1.00	0.95	1.00	
Satd. Flow (prot)		1826	1583	3433	1633		1770	5085	1583	1770	5081	
Flt Permitted		0.98	1.00	0.95	1.00		0.95	1.00	1.00	0.05	1.00	
Satd. Flow (perm)		1826	1583	3433	1633		1770	5085	1583	98	5081	
Peak-hour factor, PHF	0.95	0.95	0.95	0.95	0.95	0.95	0.95	0.95	0.95	0.95	0.95	0.95
Adj. Flow (vph)	42	63	42	825	26	120	42	3834	421	205	2028	11
RTOR Reduction (vph)	0	0	38	0	96	0	0	0	79	0	0	0
Lane Group Flow (vph)	0	105	4	825	50	0	42	3834	342	205	2039	0
Turn Type	Split		Perm	Split			Prot		Perm	pm+pt		
Protected Phases	4	4		8	8		5	2		1	6	
Permitted Phases			4						2	6		
Actuated Green, G (s)		13.3	13.3	29.7	29.7		6.9	76.0	76.0	83.1	76.1	
Effective Green, g (s)		13.3	13.3	29.7	29.7		6.9	76.0	76.0	83.1	76.1	
Actuated g/C Ratio		0.09	0.09	0.20	0.20		0.05	0.51	0.51	0.55	0.51	
Clearance Time (s)		6.0	6.0	6.0	6.0		6.0	6.0	6.0	6.0	6.0	
Vehicle Extension (s)		3.0	3.0	3.0	3.0		3.0	3.0	3.0	3.0	3.0	
Lane Grp Cap (vph)		162	140	680	323		81	2576	802	132	2578	
v/s Ratio Prot		c0.06		c0.24	0.03		0.02	0.75		c0.07	0.40	
v/s Ratio Perm			0.00						0.22	c0.79		
v/c Ratio		0.65	0.03	1.21	0.15		0.52	1.49	0.43	1.55	0.79	
Uniform Delay, d1		66.1	62.4	60.1	49.8		69.9	37.0	23.3	73.7	30.4	
Progression Factor		1.00	1.00	1.00	1.00		1.26	0.65	0.58	1.76	0.57	
Incremental Delay, d2		8.6	0.1	109.2	0.2		2.5	220.7	0.7	274.2	1.9	
Delay (s)		74.7	62.5	169.3	50.0		90.4	244.9	14.4	404.0	19.1	
Level of Service		E	E	F	D		F	F	B	F	B	
Approach Delay (s)		71.2			151.4			220.8			54.3	
Approach LOS		E			F			F			D	

Intersection Summary			
HCM Average Control Delay	160.4	HCM Level of Service	F
HCM Volume to Capacity ratio	1.31		
Actuated Cycle Length (s)	150.0	Sum of lost time (s)	18.0
Intersection Capacity Utilization	128.9%	ICU Level of Service	H
Analysis Period (min)	15		
c Critical Lane Group			

Movement	EBL	EBT	EBR	WBL	WBT	WBR	NBL	NBT	NBR	SBL	SBT	SBR
Lane Configurations												
Volume (vph)	55	20	50	175	5	90	20	3642	190	115	2711	10
Ideal Flow (vphpl)	1900	1900	1900	1900	1900	1900	1900	1900	1900	1900	1900	1900
Total Lost time (s)	6.0	6.0		6.0	6.0		6.0	6.0		6.0	6.0	
Lane Util. Factor	1.00	1.00		1.00	1.00		1.00	0.86		1.00	0.91	
Frt	1.00	0.89		1.00	0.86		1.00	0.99		1.00	1.00	
Flt Protected	0.95	1.00		0.95	1.00		0.95	1.00		0.95	1.00	
Satd. Flow (prot)	1770	1663		1770	1597		1770	6360		1770	5082	
Flt Permitted	0.65	1.00		0.71	1.00		0.95	1.00		0.95	1.00	
Satd. Flow (perm)	1203	1663		1320	1597		1770	6360		1770	5082	
Peak-hour factor, PHF	0.95	0.95	0.95	0.95	0.95	0.95	0.95	0.95	0.95	0.95	0.95	0.95
Adj. Flow (vph)	58	21	53	184	5	95	21	3834	200	121	2854	11
RTOR Reduction (vph)	0	45	0	0	54	0	0	5	0	0	0	0
Lane Group Flow (vph)	58	29	0	184	46	0	21	4029	0	121	2865	0
Turn Type	Perm			Perm			Prot			Prot		
Protected Phases		4			8		5	2		1	6	
Permitted Phases	4			8								
Actuated Green, G (s)	22.4	22.4		22.4	22.4		3.6	97.7		11.9	106.0	
Effective Green, g (s)	22.4	22.4		22.4	22.4		3.6	97.7		11.9	106.0	
Actuated g/C Ratio	0.15	0.15		0.15	0.15		0.02	0.65		0.08	0.71	
Clearance Time (s)	6.0	6.0		6.0	6.0		6.0	6.0		6.0	6.0	
Vehicle Extension (s)	3.0	3.0		3.0	3.0		3.0	3.0		3.0	3.0	
Lane Grp Cap (vph)	180	248		197	238		42	4142		140	3591	
v/s Ratio Prot		0.02			0.03		0.01	c0.63		c0.07	c0.56	
v/s Ratio Perm	0.05			c0.14								
v/c Ratio	0.32	0.12		0.93	0.19		0.50	0.97		0.86	0.80	
Uniform Delay, d1	57.0	55.2		63.1	55.9		72.3	24.9		68.3	14.8	
Progression Factor	1.00	1.00		1.00	1.00		1.11	0.27		0.98	0.57	
Incremental Delay, d2	1.0	0.2		45.4	0.4		3.4	4.3		22.0	0.9	
Delay (s)	58.1	55.4		108.5	56.3		84.1	11.0		89.0	9.4	
Level of Service	E	E		F	E		F	B		F	A	
Approach Delay (s)		56.6			90.1			11.3			12.6	
Approach LOS		E			F			B			B	

Intersection Summary			
HCM Average Control Delay	15.7	HCM Level of Service	B
HCM Volume to Capacity ratio	1.01		
Actuated Cycle Length (s)	150.0	Sum of lost time (s)	24.0
Intersection Capacity Utilization	93.7%	ICU Level of Service	F
Analysis Period (min)	15		
c Critical Lane Group			

Intersection Sign configuration not allowed in HCM analysis.

Movement	EBL	EBT	EBR	WBL	WBT	WBR	NBL	NBT	NBR	SBL	SBT	SBR
Lane Configurations												
Volume (vph)	341	1492	0	0	1002	176	443	0	432	0	0	0
Ideal Flow (vphpl)	1900	1900	1900	1900	1900	1900	1900	1900	1900	1900	1900	1900
Lane Width	11	11	11	11	11	11	11	11	11	11	11	11
Total Lost time (s)	6.0	6.0			6.0	6.0		6.0	6.0			
Lane Util. Factor	0.97	0.95			0.95	1.00		1.00	0.88			
Frt	1.00	1.00			1.00	0.85		1.00	0.85			
Flt Protected	0.95	1.00			1.00	1.00		0.95	1.00			
Satd. Flow (prot)	3319	3421			3421	1531		1711	2694			
Flt Permitted	0.95	1.00			1.00	1.00		0.95	1.00			
Satd. Flow (perm)	3319	3421			3421	1531		1711	2694			
Peak-hour factor, PHF	0.95	0.95	0.95	0.95	0.95	0.95	0.95	0.95	0.95	0.95	0.95	0.95
Adj. Flow (vph)	359	1571	0	0	1055	185	466	0	455	0	0	0
RTOR Reduction (vph)	0	0	0	0	0	82	0	0	31	0	0	0
Lane Group Flow (vph)	359	1571	0	0	1055	103	0	466	424	0	0	0
Turn Type	Prot					Perm	Perm		Perm			
Protected Phases	1	6			2			4				
Permitted Phases						2	4		4			
Actuated Green, G (s)	22.0	91.7			63.7	63.7		46.3	46.3			
Effective Green, g (s)	22.0	91.7			63.7	63.7		46.3	46.3			
Actuated g/C Ratio	0.15	0.61			0.42	0.42		0.31	0.31			
Clearance Time (s)	6.0	6.0			6.0	6.0		6.0	6.0			
Vehicle Extension (s)	3.0	3.0			3.0	3.0		3.0	3.0			
Lane Grp Cap (vph)	487	2091			1453	650		528	832			
v/s Ratio Prot	0.11	c0.46			0.31							
v/s Ratio Perm						0.07		0.27	0.16			
v/c Ratio	0.74	0.75			0.73	0.16		0.88	0.51			
Uniform Delay, d1	61.2	21.0			35.9	26.6		49.3	42.5			
Progression Factor	0.74	0.71			0.98	1.44		0.75	0.64			
Incremental Delay, d2	0.5	0.2			2.5	0.4		1.8	0.0			
Delay (s)	45.9	15.1			37.5	38.6		38.7	27.4			
Level of Service	D	B			D	D		D	C			
Approach Delay (s)		20.9			37.7			33.1			0.0	
Approach LOS		C			D			C			A	

Intersection Summary			
HCM Average Control Delay	28.7	HCM Level of Service	C
HCM Volume to Capacity ratio	0.80		
Actuated Cycle Length (s)	150.0	Sum of lost time (s)	12.0
Intersection Capacity Utilization	77.0%	ICU Level of Service	D
Analysis Period (min)	15		

c Critical Lane Group

Movement	EBL	EBT	EBR	WBL	WBT	WBR	NBL	NBT	NBR	SBL	SBT	SBR
Lane Configurations												
Volume (vph)	78	441	97	113	630	472	165	3284	48	244	2257	23
Ideal Flow (vphpl)	1900	1900	1900	1900	1900	1900	1900	1900	1900	1900	1900	1900
Total Lost time (s)	6.0	6.0	6.0	6.0	6.0	6.0	6.0	6.0		6.0	6.0	6.0
Lane Util. Factor	*1.00	*1.00	1.00	1.00	1.00	1.00	1.00	0.91		1.00	0.91	1.00
Frt	1.00	1.00	0.85	1.00	1.00	0.85	1.00	1.00		1.00	1.00	0.85
Flt Protected	0.95	1.00	1.00	0.95	1.00	1.00	0.95	1.00		0.95	1.00	1.00
Satd. Flow (prot)	3539	1861	1583	1770	1863	1583	1770	5074		1770	5085	1583
Flt Permitted	0.95	1.00	1.00	0.95	1.00	1.00	0.07	1.00		0.07	1.00	1.00
Satd. Flow (perm)	3539	1861	1583	1770	1863	1583	133	5074		126	5085	1583
Peak-hour factor, PHF	0.95	0.95	0.95	0.95	0.95	0.95	0.95	0.95	0.95	0.95	0.95	0.95
Adj. Flow (vph)	82	464	102	119	663	497	174	3457	51	257	2376	24
RTOR Reduction (vph)	0	0	57	0	0	198	0	1	0	0	0	7
Lane Group Flow (vph)	74	472	45	119	663	299	174	3507	0	257	2376	17
Turn Type	Split		Perm	Split		Perm	pm+pt			pm+pt		Perm
Protected Phases	4	4		8	8		5	2		1	6	
Permitted Phases			4			8	2			6		6
Actuated Green, G (s)	29.0	29.0	29.0	33.0	33.0	33.0	61.0	56.0		67.0	59.0	59.0
Effective Green, g (s)	29.0	29.0	29.0	33.0	33.0	33.0	61.0	56.0		67.0	59.0	59.0
Actuated g/C Ratio	0.19	0.19	0.19	0.22	0.22	0.22	0.41	0.37		0.45	0.39	0.39
Clearance Time (s)	6.0	6.0	6.0	6.0	6.0	6.0	6.0	6.0		6.0	6.0	6.0
Vehicle Extension (s)	3.0	3.0	3.0	3.0	3.0	3.0	3.0	3.0		3.0	3.0	3.0
Lane Grp Cap (vph)	684	360	306	389	410	348	109	1894		144	2000	623
v/s Ratio Prot	0.02	c0.25		0.07	c0.36		0.05	0.69		c0.10	0.47	
v/s Ratio Perm			0.03			0.19	0.60			c0.70		0.01
v/c Ratio	0.11	1.31	0.15	0.31	1.62	0.86	1.60	1.85		1.78	1.19	0.03
Uniform Delay, d1	49.8	60.5	50.2	48.9	58.5	56.3	74.7	47.0		73.2	45.5	27.9
Progression Factor	0.65	0.68	0.51	1.00	1.00	1.00	1.50	0.96		2.16	0.47	0.44
Incremental Delay, d2	0.1	157.5	0.2	0.4	288.7	18.5	272.3	383.4		367.2	87.4	0.0
Delay (s)	32.5	198.4	25.7	49.4	347.2	74.8	384.3	428.4		525.4	108.6	12.4
Level of Service	C	F	C	D	F	E	F	F		F	F	B
Approach Delay (s)		152.2			213.7			426.3			148.1	
Approach LOS		F			F			F			F	

Intersection Summary			
HCM Average Control Delay	282.5	HCM Level of Service	F
HCM Volume to Capacity ratio	1.67		
Actuated Cycle Length (s)	150.0	Sum of lost time (s)	24.0
Intersection Capacity Utilization	154.4%	ICU Level of Service	H
Analysis Period (min)	15		
c Critical Lane Group			

Movement	EBL	EBT	EBR	WBL	WBT	WBR	NBL	NBT	NBR	SBL	SBT	SBR
Lane Configurations												
Volume (vph)	89	130	175	64	44	167	15	3016	60	69	2335	38
Ideal Flow (vphpl)	1900	1900	1900	1900	1900	1900	1900	1900	1900	1900	1900	1900
Total Lost time (s)	6.0	6.0		6.0	6.0	6.0	6.0	6.0	6.0	6.0	6.0	6.0
Lane Util. Factor	1.00	0.95		1.00	0.95	1.00	1.00	0.91	1.00	1.00	0.91	1.00
Frt	1.00	0.91		1.00	1.00	0.85	1.00	1.00	0.85	1.00	1.00	0.85
Flt Protected	0.95	1.00		0.95	1.00	1.00	0.95	1.00	1.00	0.95	1.00	1.00
Satd. Flow (prot)	1770	3235		1770	3539	1583	1770	5085	1583	1770	5085	1583
Flt Permitted	0.66	1.00		0.33	1.00	1.00	0.04	1.00	1.00	0.04	1.00	1.00
Satd. Flow (perm)	1239	3235		607	3539	1583	79	5085	1583	74	5085	1583
Peak-hour factor, PHF	0.95	0.95	0.95	0.95	0.95	0.95	0.95	0.95	0.95	0.95	0.95	0.95
Adj. Flow (vph)	94	137	184	67	46	176	16	3175	63	73	2458	40
RTOR Reduction (vph)	0	107	0	0	0	110	0	0	23	0	0	11
Lane Group Flow (vph)	94	214	0	67	46	66	16	3175	40	73	2458	29
Turn Type	pm+pt			pm+pt		Perm	pm+pt		Perm	pm+pt		Perm
Protected Phases	7	4		3	8		5	2		1	6	
Permitted Phases	4			8		8	2		2	6		6
Actuated Green, G (s)	23.8	16.8		21.0	15.4	15.4	97.4	94.9	94.9	109.6	101.1	101.1
Effective Green, g (s)	23.8	16.8		21.0	15.4	15.4	97.4	94.9	94.9	109.6	101.1	101.1
Actuated g/C Ratio	0.16	0.11		0.14	0.10	0.10	0.65	0.63	0.63	0.73	0.67	0.67
Clearance Time (s)	6.0	6.0		6.0	6.0	6.0	6.0	6.0	6.0	6.0	6.0	6.0
Vehicle Extension (s)	3.0	3.0		3.0	3.0	3.0	3.0	3.0	3.0	3.0	3.0	3.0
Lane Grp Cap (vph)	221	362		128	363	163	79	3217	1002	152	3427	1067
v/s Ratio Prot	c0.02	c0.07		0.02	0.01		0.00	c0.62		c0.03	c0.48	
v/s Ratio Perm	0.05			0.05		0.04	0.13		0.03	0.32		0.02
v/c Ratio	0.43	0.59		0.52	0.13	0.40	0.20	0.99	0.04	0.48	0.72	0.03
Uniform Delay, d1	56.1	63.3		57.8	61.2	63.0	14.4	26.9	10.4	39.5	15.4	8.1
Progression Factor	1.00	1.00		1.00	1.00	1.00	1.02	1.20	0.00	2.08	0.20	0.20
Incremental Delay, d2	1.3	2.5		3.8	0.2	1.6	0.1	2.6	0.0	1.7	0.9	0.0
Delay (s)	57.4	65.8		61.6	61.3	64.6	14.8	34.9	0.0	84.0	4.0	1.6
Level of Service	E	E		E	E	E	B	C	A	F	A	A
Approach Delay (s)		63.9			63.4			34.2			6.2	
Approach LOS		E			E			C			A	

Intersection Summary			
HCM Average Control Delay	26.4	HCM Level of Service	C
HCM Volume to Capacity ratio	0.89		
Actuated Cycle Length (s)	150.0	Sum of lost time (s)	24.0
Intersection Capacity Utilization	88.5%	ICU Level of Service	E
Analysis Period (min)	15		
c Critical Lane Group			

Movement	EBL	EBT	EBR	WBL	WBT	WBR	NBL	NBT	NBR	SBL	SBT	SBR
Lane Configurations												
Volume (vph)	290	726	19	199	716	199	50	2495	125	178	2205	47
Ideal Flow (vphpl)	1900	1900	1900	1900	1900	1900	1900	1900	1900	1900	1900	1900
Total Lost time (s)		6.0	6.0	6.0	6.0	6.0	6.0	6.0	6.0	6.0	6.0	6.0
Lane Util. Factor		0.95	1.00	0.97	0.95	1.00	1.00	0.91	1.00	1.00	0.91	1.00
Frt		1.00	0.85	1.00	1.00	0.85	1.00	1.00	0.85	1.00	1.00	0.85
Flt Protected		0.99	1.00	0.95	1.00	1.00	0.95	1.00	1.00	0.95	1.00	1.00
Satd. Flow (prot)		3489	1583	3433	3539	1583	1770	5085	1583	1770	5085	1583
Flt Permitted		0.62	1.00	0.10	1.00	1.00	0.95	1.00	1.00	0.08	1.00	1.00
Satd. Flow (perm)		2188	1583	347	3539	1583	1770	5085	1583	145	5085	1583
Peak-hour factor, PHF	0.95	0.95	0.95	0.95	0.95	0.95	0.95	0.95	0.95	0.95	0.95	0.95
Adj. Flow (vph)	305	764	20	209	754	209	53	2626	132	187	2321	49
RTOR Reduction (vph)	0	0	6	0	0	67	0	0	36	0	0	15
Lane Group Flow (vph)	0	1069	14	209	754	142	53	2626	96	187	2321	34
Turn Type	Perm		Perm	pm+pt		Perm	Prot		Perm	pm+pt		Perm
Protected Phases		4		3	8		5	2		1	6	
Permitted Phases	4		4	8		8			2	6		6
Actuated Green, G (s)		58.7	58.7	75.0	75.0	75.0	5.6	50.0	50.0	58.4	51.4	51.4
Effective Green, g (s)		58.7	58.7	75.0	75.0	75.0	5.6	50.0	50.0	58.4	51.4	51.4
Actuated g/C Ratio		0.39	0.39	0.50	0.50	0.50	0.04	0.33	0.33	0.39	0.34	0.34
Clearance Time (s)		6.0	6.0	6.0	6.0	6.0	6.0	6.0	6.0	6.0	6.0	6.0
Vehicle Extension (s)		3.0	3.0	3.0	3.0	3.0	3.0	3.0	3.0	3.0	3.0	3.0
Lane Grp Cap (vph)		856	619	385	1770	792	66	1695	528	132	1742	542
v/s Ratio Prot				0.04	c0.21		0.03	c0.52		c0.07	0.46	
v/s Ratio Perm		c0.49	0.01	0.23		0.09			0.06	0.48		0.02
v/c Ratio		1.25	0.02	0.54	0.43	0.18	0.80	1.55	0.18	1.42	1.33	0.06
Uniform Delay, d1		45.6	28.0	27.3	23.8	20.6	71.7	50.0	35.5	73.7	49.3	33.1
Progression Factor		0.43	0.30	1.32	0.87	0.93	1.28	0.84	0.95	1.70	0.86	0.96
Incremental Delay, d2		120.0	0.0	1.5	0.2	0.1	25.8	248.5	0.3	217.4	152.6	0.2
Delay (s)		139.7	8.4	37.5	20.8	19.3	117.8	290.4	34.2	342.8	195.1	31.9
Level of Service		F	A	D	C	B	F	F	C	F	F	C
Approach Delay (s)		137.3			23.5			275.1			202.8	
Approach LOS		F			C			F			F	

Intersection Summary			
HCM Average Control Delay	192.6	HCM Level of Service	F
HCM Volume to Capacity ratio	1.32		
Actuated Cycle Length (s)	150.0	Sum of lost time (s)	24.0
Intersection Capacity Utilization	126.4%	ICU Level of Service	H
Analysis Period (min)	15		
c Critical Lane Group			

Movement	EBL	EBT	EBR	WBL	WBT	WBR	NBL	NBT	NBR	SBL	SBT	SBR
Lane Configurations												
Volume (vph)	230	0	97	307	0	205	54	1970	253	169	2294	59
Ideal Flow (vphpl)	1900	1900	1900	1900	1900	1900	1900	1900	1900	1900	1900	1900
Total Lost time (s)	6.0	6.0		6.0	6.0		6.0	6.0		6.0	6.0	6.0
Lane Util. Factor	1.00	1.00		1.00	1.00		1.00	0.86		1.00	0.91	1.00
Frt	1.00	0.85		1.00	0.85		1.00	0.98		1.00	1.00	0.85
Flt Protected	0.95	1.00		0.95	1.00		0.95	1.00		0.95	1.00	1.00
Satd. Flow (prot)	1770	1583		1770	1583		1770	6299		1770	5085	1583
Flt Permitted	0.36	1.00		0.44	1.00		0.05	1.00		0.95	1.00	1.00
Satd. Flow (perm)	671	1583		829	1583		100	6299		1770	5085	1583
Peak-hour factor, PHF	0.95	0.95	0.95	0.95	0.95	0.95	0.95	0.95	0.95	0.95	0.95	0.95
Adj. Flow (vph)	242	0	102	323	0	216	57	2074	266	178	2415	62
RTOR Reduction (vph)	0	93	0	0	163	0	0	14	0	0	0	16
Lane Group Flow (vph)	242	9	0	323	53	0	57	2326	0	178	2415	46
Turn Type	pm+pt			pm+pt			pm+pt			Prot		Perm
Protected Phases	7	4		3	8		5	2		1	6	
Permitted Phases	4			8			2					6
Actuated Green, G (s)	29.3	11.1		34.3	13.6		80.7	74.4		19.8	87.9	87.9
Effective Green, g (s)	29.3	11.1		34.3	13.6		80.7	74.4		19.8	87.9	87.9
Actuated g/C Ratio	0.20	0.07		0.23	0.09		0.54	0.50		0.13	0.59	0.59
Clearance Time (s)	6.0	6.0		6.0	6.0		6.0	6.0		6.0	6.0	6.0
Vehicle Extension (s)	3.0	3.0		3.0	3.0		3.0	3.0		3.0	3.0	3.0
Lane Grp Cap (vph)	264	117		319	144		124	3124		234	2980	928
v/s Ratio Prot	0.11	0.01		c0.14	0.03		0.02	0.37		c0.10	c0.47	
v/s Ratio Perm	0.07			c0.09			0.23					0.03
v/c Ratio	0.92	0.08		1.01	0.37		0.46	0.74		0.76	0.81	0.05
Uniform Delay, d1	57.0	64.7		55.6	64.2		23.9	30.2		62.8	24.5	13.2
Progression Factor	1.00	1.00		1.00	1.00		1.35	0.71		1.22	0.28	0.11
Incremental Delay, d2	33.8	0.3		53.6	1.6		1.2	0.7		10.9	2.0	0.1
Delay (s)	90.8	65.0		109.2	65.8		33.4	22.0		87.6	8.9	1.5
Level of Service	F	E		F	E		C	C		F	A	A
Approach Delay (s)		83.1			91.8			22.3			14.0	
Approach LOS		F			F			C			B	

Intersection Summary			
HCM Average Control Delay	28.4	HCM Level of Service	C
HCM Volume to Capacity ratio	0.86		
Actuated Cycle Length (s)	150.0	Sum of lost time (s)	18.0
Intersection Capacity Utilization	93.1%	ICU Level of Service	F
Analysis Period (min)	15		
c Critical Lane Group			

Movement	EBL	EBT	EBR	WBL	WBT	WBR	NBL	NBT	NBR	SBL	SBT	SBR
Lane Configurations												
Volume (vph)	472	241	99	270	287	41	41	1869	208	33	2274	170
Ideal Flow (vphpl)	1900	1900	1900	1900	1900	1900	1900	1900	1900	1900	1900	1900
Total Lost time (s)		6.0	6.0	6.0	6.0	6.0	6.0	6.0	6.0	6.0	6.0	
Lane Util. Factor		0.95	1.00	0.95	0.95	1.00	1.00	0.91	1.00	1.00	0.91	
Frt		1.00	0.85	1.00	1.00	0.85	1.00	1.00	0.85	1.00	0.99	
Flt Protected		0.97	1.00	0.95	1.00	1.00	0.95	1.00	1.00	0.95	1.00	
Satd. Flow (prot)		3426	1583	1681	1762	1583	1770	5085	1583	1770	5032	
Flt Permitted		0.97	1.00	0.95	1.00	1.00	0.06	1.00	1.00	0.06	1.00	
Satd. Flow (perm)		3426	1583	1681	1762	1583	109	5085	1583	111	5032	
Peak-hour factor, PHF	0.95	0.95	0.95	0.95	0.95	0.95	0.95	0.95	0.95	0.95	0.95	0.95
Adj. Flow (vph)	497	254	104	284	302	43	43	1967	219	35	2394	179
RTOR Reduction (vph)	0	0	0	0	0	34	0	0	119	0	6	0
Lane Group Flow (vph)	0	751	104	256	330	9	43	1967	100	35	2567	0
Turn Type	Split		pm+ov	Split		Perm	pm+pt		Perm	pm+pt		
Protected Phases	4	4	5	8	8		5	2		1	6	
Permitted Phases			4			8	2		2	6		
Actuated Green, G (s)		28.0	34.9	24.0	24.0	24.0	75.5	68.6	68.6	72.5	67.1	
Effective Green, g (s)		28.0	34.9	24.0	24.0	24.0	75.5	68.6	68.6	72.5	67.1	
Actuated g/C Ratio		0.19	0.23	0.16	0.16	0.16	0.50	0.46	0.46	0.48	0.45	
Clearance Time (s)		6.0	6.0	6.0	6.0	6.0	6.0	6.0	6.0	6.0	6.0	
Vehicle Extension (s)		3.0	3.0	3.0	3.0	3.0	3.0	3.0	3.0	3.0	3.0	
Lane Grp Cap (vph)		640	368	269	282	253	131	2326	724	113	2251	
v/s Ratio Prot		c0.22	0.01	0.15	c0.19		c0.02	0.39		0.01	c0.51	
v/s Ratio Perm			0.05			0.01	0.15		0.06	0.14		
v/c Ratio		1.51dl	0.28	0.95	1.17	0.03	0.33	0.85	0.14	0.31	1.14	
Uniform Delay, d1		61.0	47.3	62.4	63.0	53.2	34.6	36.0	23.6	28.5	41.5	
Progression Factor		0.85	0.59	1.00	1.00	1.00	1.37	0.31	0.18	0.88	0.56	
Incremental Delay, d2		82.6	0.1	41.6	107.8	0.1	1.0	2.7	0.3	0.9	66.8	
Delay (s)		134.5	27.8	104.0	170.8	53.3	48.3	14.0	4.5	25.9	89.9	
Level of Service		F	C	F	F	D	D	B	A	C	F	
Approach Delay (s)		121.5			135.6			13.8			89.1	
Approach LOS		F			F			B			F	

Intersection Summary			
HCM Average Control Delay	71.5	HCM Level of Service	E
HCM Volume to Capacity ratio	1.11		
Actuated Cycle Length (s)	150.0	Sum of lost time (s)	24.0
Intersection Capacity Utilization	104.0%	ICU Level of Service	G
Analysis Period (min)	15		

dl Defacto Left Lane. Recode with 1 though lane as a left lane.
c Critical Lane Group

Movement	EBL	EBT	EBR	WBL	WBT	WBR	NBL	NBT	NBR	SBL	SBT	SBR
Lane Configurations												
Volume (vph)	34	27	55	301	14	108	30	2004	603	171	2575	36
Ideal Flow (vphpl)	1900	1900	1900	1900	1900	1900	1900	1900	1900	1900	1900	1900
Total Lost time (s)		6.0	6.0	6.0	6.0	6.0	6.0	6.0	6.0	6.0	6.0	
Lane Util. Factor		1.00	1.00	0.95	0.95	1.00	1.00	0.91	1.00	1.00	0.91	
Frt		1.00	0.85	1.00	1.00	0.85	1.00	1.00	0.85	1.00	1.00	
Flt Protected		0.97	1.00	0.95	0.96	1.00	0.95	1.00	1.00	0.95	1.00	
Satd. Flow (prot)		1812	1583	1681	1693	1583	1770	5085	1583	1770	5075	
Flt Permitted		0.97	1.00	0.95	0.96	1.00	0.05	1.00	1.00	0.05	1.00	
Satd. Flow (perm)		1812	1583	1681	1693	1583	90	5085	1583	84	5075	
Peak-hour factor, PHF	0.95	0.95	0.95	0.95	0.95	0.95	0.95	0.95	0.95	0.95	0.95	0.95
Adj. Flow (vph)	36	28	58	317	15	114	32	2109	635	180	2711	38
RTOR Reduction (vph)	0	0	54	0	0	82	0	0	286	0	1	0
Lane Group Flow (vph)	0	64	4	165	167	32	32	2109	349	180	2748	0
Turn Type	Split		Perm	Split		Perm	pm+pt		Perm	pm+pt		
Protected Phases	4	4		8	8		5	2		1	6	
Permitted Phases			4			8	2		2	6		
Actuated Green, G (s)		11.6	11.6	17.9	17.9	17.9	86.6	82.5	82.5	102.5	92.4	
Effective Green, g (s)		11.6	11.6	17.9	17.9	17.9	86.6	82.5	82.5	102.5	92.4	
Actuated g/C Ratio		0.08	0.08	0.12	0.12	0.12	0.58	0.55	0.55	0.68	0.62	
Clearance Time (s)		6.0	6.0	6.0	6.0	6.0	6.0	6.0	6.0	6.0	6.0	
Vehicle Extension (s)		3.0	3.0	3.0	3.0	3.0	3.0	3.0	3.0	3.0	3.0	
Lane Grp Cap (vph)		140	122	201	202	189	98	2797	871	215	3126	
v/s Ratio Prot		c0.04		0.10	c0.10		0.01	0.41		c0.08	c0.54	
v/s Ratio Perm			0.00			0.02	0.18		0.22	0.49		
v/c Ratio		0.46	0.04	0.82	0.83	0.17	0.33	0.75	0.40	0.84	0.88	
Uniform Delay, d1		66.2	64.0	64.5	64.5	59.4	25.9	25.9	19.5	46.7	24.1	
Progression Factor		1.00	1.00	1.00	1.00	1.00	1.11	0.22	0.00	0.90	1.44	
Incremental Delay, d2		2.4	0.1	22.8	23.3	0.4	1.2	1.2	0.8	2.7	0.4	
Delay (s)		68.5	64.2	87.3	87.8	59.8	30.1	7.0	0.8	44.7	35.2	
Level of Service		E	E	F	F	E	C	A	A	D	D	
Approach Delay (s)		66.5			80.5			5.9			35.8	
Approach LOS		E			F			A			D	

Intersection Summary			
HCM Average Control Delay	26.3	HCM Level of Service	C
HCM Volume to Capacity ratio	0.85		
Actuated Cycle Length (s)	150.0	Sum of lost time (s)	24.0
Intersection Capacity Utilization	84.3%	ICU Level of Service	E
Analysis Period (min)	15		
c Critical Lane Group			

Movement	EBL	EBT	EBR	WBL	WBT	WBR	NBL	NBT	NBR	SBL	SBT	SBR
Lane Configurations												
Volume (vph)	43	211	576	43	327	310	172	1960	30	189	2516	60
Ideal Flow (vphpl)	1900	1900	1900	1900	1900	1900	1900	1900	1900	1900	1900	1900
Total Lost time (s)	6.0	6.0	6.0	6.0	6.0	6.0	6.0	6.0		6.0	6.0	6.0
Lane Util. Factor	0.91	0.91	1.00	0.91	0.91	1.00	1.00	0.91		1.00	0.91	1.00
Frt	1.00	1.00	0.85	1.00	1.00	0.85	1.00	1.00		1.00	1.00	0.85
Flt Protected	0.95	1.00	1.00	0.95	1.00	1.00	0.95	1.00		0.95	1.00	1.00
Satd. Flow (prot)	1610	3386	1583	1610	3388	1583	1770	5074		1770	5085	1583
Flt Permitted	0.95	1.00	1.00	0.95	1.00	1.00	0.95	1.00		0.06	1.00	1.00
Satd. Flow (perm)	1610	3386	1583	1610	3388	1583	1770	5074		108	5085	1583
Peak-hour factor, PHF	0.95	0.95	0.95	0.95	0.95	0.95	0.95	0.95	0.95	0.95	0.95	0.95
Adj. Flow (vph)	45	222	606	45	344	326	181	2063	32	199	2648	63
RTOR Reduction (vph)	0	0	198	0	0	291	0	1	0	0	0	30
Lane Group Flow (vph)	40	227	408	40	349	35	181	2094	0	199	2648	33
Turn Type	Split		Perm	Split		Perm	Prot			pm+pt		Perm
Protected Phases	4	4		8	8		5	2		1	6	
Permitted Phases			4			8				6		6
Actuated Green, G (s)	29.0	29.0	29.0	16.0	16.0	16.0	12.0	67.1		82.9	69.0	69.0
Effective Green, g (s)	29.0	29.0	29.0	16.0	16.0	16.0	12.0	67.1		82.9	69.0	69.0
Actuated g/C Ratio	0.19	0.19	0.19	0.11	0.11	0.11	0.08	0.45		0.55	0.46	0.46
Clearance Time (s)	6.0	6.0	6.0	6.0	6.0	6.0	6.0	6.0		6.0	6.0	6.0
Vehicle Extension (s)	3.0	3.0	3.0	3.0	3.0	3.0	3.0	3.0		3.0	3.0	3.0
Lane Grp Cap (vph)	311	655	306	172	361	169	142	2270		214	2339	728
v/s Ratio Prot	0.02	0.07		0.02	c0.10		c0.10	0.41		0.09	c0.52	
v/s Ratio Perm			c0.26			0.02				0.43		0.02
v/c Ratio	0.13	0.35	1.33	0.23	0.97	0.21	1.27	0.92		0.93	1.13	0.05
Uniform Delay, d1	50.0	52.3	60.5	61.4	66.7	61.2	69.0	39.0		47.7	40.5	22.3
Progression Factor	0.89	0.87	0.74	1.00	1.00	1.00	1.00	1.00		1.10	0.93	2.02
Incremental Delay, d2	0.2	0.3	170.3	0.7	38.2	0.6	167.1	7.7		27.0	62.7	0.1
Delay (s)	44.9	46.0	215.3	62.1	104.9	61.8	236.1	46.7		79.6	100.2	45.2
Level of Service	D	D	F	E	F	E	F	D		E	F	D
Approach Delay (s)		163.5			82.9			61.8			97.6	
Approach LOS		F			F			E			F	

Intersection Summary			
HCM Average Control Delay	92.5	HCM Level of Service	F
HCM Volume to Capacity ratio	1.12		
Actuated Cycle Length (s)	150.0	Sum of lost time (s)	18.0
Intersection Capacity Utilization	108.3%	ICU Level of Service	G
Analysis Period (min)	15		
c Critical Lane Group			

Movement	EBL	EBT	WBT	WBR	SBL	SBR
Lane Configurations						
Volume (vph)	1169	2056	2849	25	0	594
Ideal Flow (vphpl)	1900	1900	1900	1900	1900	1900
Total Lost time (s)	6.0	4.0	6.0	6.0		4.0
Lane Util. Factor	0.94	0.95	0.95	1.00		1.00
Frt	1.00	1.00	1.00	0.85		0.86
Flt Protected	0.95	1.00	1.00	1.00		1.00
Satd. Flow (prot)	4990	3539	3539	1583		1611
Flt Permitted	0.95	1.00	1.00	1.00		1.00
Satd. Flow (perm)	4990	3539	3539	1583		1611
Peak-hour factor, PHF	0.95	0.95	0.95	0.95	0.95	0.95
Adj. Flow (vph)	1231	2164	2999	26	0	625
RTOR Reduction (vph)	0	0	0	0	0	0
Lane Group Flow (vph)	1231	2164	2999	26	0	625
Turn Type	Prot			Perm		Free
Protected Phases	1	Free	2			
Permitted Phases				2		Free
Actuated Green, G (s)	32.0	150.0	106.0	106.0		150.0
Effective Green, g (s)	32.0	150.0	106.0	106.0		150.0
Actuated g/C Ratio	0.21	1.00	0.71	0.71		1.00
Clearance Time (s)	6.0		6.0	6.0		
Vehicle Extension (s)	3.0		3.0	3.0		
Lane Grp Cap (vph)	1065	3539	2501	1119		1611
v/s Ratio Prot	c0.25	0.61	c0.85			
v/s Ratio Perm				0.02		0.39
v/c Ratio	1.16	0.61	1.20	0.02		0.39
Uniform Delay, d1	59.0	0.0	22.0	6.6		0.0
Progression Factor	1.00	1.00	0.51	0.89		1.00
Incremental Delay, d2	81.0	0.8	90.0	0.0		0.7
Delay (s)	140.0	0.8	101.3	5.9		0.7
Level of Service	F	A	F	A		A
Approach Delay (s)		51.3	100.5		0.7	
Approach LOS		D	F		A	

Intersection Summary			
HCM Average Control Delay	67.9	HCM Level of Service	E
HCM Volume to Capacity ratio	1.19		
Actuated Cycle Length (s)	150.0	Sum of lost time (s)	12.0
Intersection Capacity Utilization	111.0%	ICU Level of Service	H
Analysis Period (min)	15		
c Critical Lane Group			

Movement	EBL	EBT	EBR	WBL	WBT	WBR	NBL	NBT	NBR	SBL	SBT	SBR
Lane Configurations												
Volume (vph)	485	369	60	113	109	50	190	625	35	44	394	438
Ideal Flow (vphpl)	1900	1900	1900	1900	1900	1900	1900	1900	1900	1900	1900	1900
Total Lost time (s)	6.0	6.0	4.0	6.0	6.0		6.0	6.0		6.0	6.0	6.0
Lane Util. Factor	0.97	0.95	1.00	1.00	0.95		1.00	0.95		1.00	0.95	0.88
Frt	1.00	1.00	0.85	1.00	0.95		1.00	0.99		1.00	1.00	0.85
Flt Protected	0.95	1.00	1.00	0.95	1.00		0.95	1.00		0.95	1.00	1.00
Satd. Flow (prot)	3433	3539	1583	1770	3372		1770	3511		1770	3539	2787
Flt Permitted	0.95	1.00	1.00	0.95	1.00		0.95	1.00		0.95	1.00	1.00
Satd. Flow (perm)	3433	3539	1583	1770	3372		1770	3511		1770	3539	2787
Peak-hour factor, PHF	0.95	0.95	0.95	0.95	0.95	0.95	0.95	0.95	0.95	0.95	0.95	0.95
Adj. Flow (vph)	511	388	63	119	115	53	200	658	37	46	415	461
RTOR Reduction (vph)	0	0	0	0	32	0	0	3	0	0	0	280
Lane Group Flow (vph)	511	388	63	119	136	0	200	692	0	46	415	181
Turn Type	Prot		Free	Prot			Split			Split		pt+ov
Protected Phases	1	6		5	2		4	4		8	8	8 1
Permitted Phases			Free									
Actuated Green, G (s)	29.1	51.0	150.0	15.1	37.0		36.1	36.1		23.8	23.8	58.9
Effective Green, g (s)	29.1	51.0	150.0	15.1	37.0		36.1	36.1		23.8	23.8	58.9
Actuated g/C Ratio	0.19	0.34	1.00	0.10	0.25		0.24	0.24		0.16	0.16	0.39
Clearance Time (s)	6.0	6.0		6.0	6.0		6.0	6.0		6.0	6.0	
Vehicle Extension (s)	3.0	3.0		3.0	3.0		3.0	3.0		3.0	3.0	
Lane Grp Cap (vph)	666	1203	1583	178	832		426	845		281	562	1094
v/s Ratio Prot	c0.15	c0.11		0.07	0.04		0.11	c0.20		0.03	c0.12	0.06
v/s Ratio Perm			0.04									
v/c Ratio	0.77	0.32	0.04	0.67	0.16		0.47	0.82		0.16	0.74	0.17
Uniform Delay, d1	57.2	36.7	0.0	65.0	44.4		48.8	53.9		54.5	60.1	29.6
Progression Factor	0.96	0.19	1.00	0.68	1.54		0.88	0.90		1.00	1.00	1.00
Incremental Delay, d2	0.5	0.1	0.0	8.5	0.4		0.6	4.6		0.3	5.0	0.1
Delay (s)	55.2	6.9	0.0	52.9	68.7		43.4	53.2		54.8	65.2	29.7
Level of Service	E	A	A	D	E		D	D		D	E	C
Approach Delay (s)		32.1			62.2			51.0			46.9	
Approach LOS		C			E			D			D	

Intersection Summary			
HCM Average Control Delay	44.9	HCM Level of Service	D
HCM Volume to Capacity ratio	0.62		
Actuated Cycle Length (s)	150.0	Sum of lost time (s)	18.0
Intersection Capacity Utilization	60.2%	ICU Level of Service	B
Analysis Period (min)	15		
c Critical Lane Group			

Intersection Sign configuration not allowed in HCM analysis.

Movement	EBL	EBT	EBR	WBL	WBT	WBR	NBL	NBT	NBR	SBL	SBT	SBR
Lane Configurations												
Volume (vph)	318	25	95	20	40	40	65	268	15	5	615	157
Ideal Flow (vphpl)	1900	1900	1900	1900	1900	1900	1900	1900	1900	1900	1900	1900
Total Lost time (s)		6.0	6.0	6.0	6.0		6.0	6.0		6.0	6.0	
Lane Util. Factor		1.00	0.88	1.00	1.00		0.97	0.95		1.00	0.95	
Frt		1.00	0.85	1.00	0.93		1.00	0.99		1.00	0.97	
Flt Protected		0.96	1.00	0.95	1.00		0.95	1.00		0.95	1.00	
Satd. Flow (prot)		1780	2787	1770	1723		3433	3511		1770	3431	
Flt Permitted		0.96	1.00	0.55	1.00		0.95	1.00		0.57	1.00	
Satd. Flow (perm)		1780	2787	1016	1723		3433	3511		1061	3431	
Peak-hour factor, PHF	0.95	0.95	0.95	0.95	0.95	0.95	0.95	0.95	0.95	0.95	0.95	0.95
Adj. Flow (vph)	335	26	100	21	42	42	68	282	16	5	647	165
RTOR Reduction (vph)	0	0	76	0	25	0	0	2	0	0	12	0
Lane Group Flow (vph)	0	361	24	21	59	0	68	296	0	5	800	0
Turn Type	Split		Perm	Perm			Prot			Perm		
Protected Phases	4	4			8		5	2			6	
Permitted Phases			4	8						6		
Actuated Green, G (s)		36.2	36.2	11.2	11.2		7.2	84.6		71.4	71.4	
Effective Green, g (s)		36.2	36.2	11.2	11.2		7.2	84.6		71.4	71.4	
Actuated g/C Ratio		0.24	0.24	0.07	0.07		0.05	0.56		0.48	0.48	
Clearance Time (s)		6.0	6.0	6.0	6.0		6.0	6.0		6.0	6.0	
Vehicle Extension (s)		3.0	3.0	3.0	3.0		3.0	3.0		3.0	3.0	
Lane Grp Cap (vph)		430	673	76	129		165	1980		505	1633	
v/s Ratio Prot		c0.20			c0.03		c0.02	0.08			c0.23	
v/s Ratio Perm			0.01	0.02						0.00		
v/c Ratio		0.84	0.04	0.28	0.46		0.41	0.15		0.01	0.49	
Uniform Delay, d1		54.1	43.5	65.6	66.5		69.3	15.6		20.7	26.9	
Progression Factor		1.06	4.18	1.00	1.00		0.77	1.42		0.48	0.47	
Incremental Delay, d2		13.0	0.0	2.0	2.6		1.6	0.2		0.0	0.6	
Delay (s)		70.2	181.8	67.5	69.1		55.0	22.3		9.9	13.3	
Level of Service		E	F	E	E		E	C		A	B	
Approach Delay (s)		94.4			68.8			28.4			13.3	
Approach LOS		F			E			C			B	

Intersection Summary			
HCM Average Control Delay	41.2	HCM Level of Service	D
HCM Volume to Capacity ratio	0.58		
Actuated Cycle Length (s)	150.0	Sum of lost time (s)	24.0
Intersection Capacity Utilization	63.4%	ICU Level of Service	B
Analysis Period (min)	15		
c Critical Lane Group			

Movement	EBL	EBT	EBR	WBL	WBT	WBR	NBL	NBT	NBR	SBL	SBT	SBR
Lane Configurations												
Volume (vph)	130	985	1072	40	1121	60	1619	660	0	175	219	113
Ideal Flow (vphpl)	1900	1900	1900	1900	1900	1900	1900	1900	1900	1900	1900	1900
Total Lost time (s)	6.0	6.0	6.0	6.0	6.0		6.0	6.0		6.0	6.0	6.0
Lane Util. Factor	1.00	0.95	1.00	1.00	0.95		0.97	0.95		1.00	1.00	1.00
Frt	1.00	1.00	0.85	1.00	0.99		1.00	1.00		1.00	1.00	0.85
Flt Protected	0.95	1.00	1.00	0.95	1.00		0.95	1.00		0.95	1.00	1.00
Satd. Flow (prot)	1770	3539	1583	1770	3512		3433	3539		1770	1863	1583
Flt Permitted	0.09	1.00	1.00	0.09	1.00		0.95	1.00		0.95	1.00	1.00
Satd. Flow (perm)	162	3539	1583	169	3512		3433	3539		1770	1863	1583
Peak-hour factor, PHF	0.95	0.95	0.95	0.95	0.95	0.95	0.95	0.95	0.95	0.95	0.95	0.95
Adj. Flow (vph)	137	1037	1128	42	1180	63	1704	695	0	184	231	119
RTOR Reduction (vph)	0	0	559	0	3	0	0	0	0	0	0	41
Lane Group Flow (vph)	137	1037	569	42	1240	0	1704	695	0	184	231	78
Turn Type	pm+pt		Perm	pm+pt			Prot			Prot		Perm
Protected Phases	7	4		3	8		5	2		1	6	
Permitted Phases	4		4	8								6
Actuated Green, G (s)	51.0	46.0	46.0	47.4	44.2		59.0	56.6		20.2	17.8	17.8
Effective Green, g (s)	51.0	46.0	46.0	47.4	44.2		59.0	56.6		20.2	17.8	17.8
Actuated g/C Ratio	0.34	0.31	0.31	0.32	0.29		0.39	0.38		0.13	0.12	0.12
Clearance Time (s)	6.0	6.0	6.0	6.0	6.0		6.0	6.0		6.0	6.0	6.0
Vehicle Extension (s)	3.0	3.0	3.0	3.0	3.0		3.0	3.0		3.0	3.0	3.0
Lane Grp Cap (vph)	109	1085	485	88	1035		1350	1335		238	221	188
v/s Ratio Prot	c0.04	0.29		0.01	0.35		c0.50	0.20		0.10	c0.12	
v/s Ratio Perm	c0.39		0.36	0.14								0.05
v/c Ratio	1.26	0.96	1.17	0.48	1.20		1.26	0.52		0.77	1.05	0.42
Uniform Delay, d1	74.7	51.0	52.0	40.8	52.9		45.5	36.2		62.7	66.1	61.3
Progression Factor	1.00	1.00	1.00	0.53	0.76		0.91	0.50		0.96	0.71	0.96
Incremental Delay, d2	162.8	15.3	95.1	2.7	95.7		122.3	1.0		12.3	67.8	5.6
Delay (s)	237.5	66.3	147.1	24.2	135.8		163.7	19.2		72.2	114.4	64.2
Level of Service	F	E	F	C	F		F	B		E	F	E
Approach Delay (s)		116.1			132.2			121.8			88.7	
Approach LOS		F			F			F			F	

Intersection Summary			
HCM Average Control Delay	119.1	HCM Level of Service	F
HCM Volume to Capacity ratio	1.19		
Actuated Cycle Length (s)	150.0	Sum of lost time (s)	18.0
Intersection Capacity Utilization	117.8%	ICU Level of Service	H
Analysis Period (min)	15		
c Critical Lane Group			

Movement	EBL	EBT	EBR	WBL	WBT	WBR	NBL	NBT	NBR	SBL	SBT	SBR
Lane Configurations												
Volume (vph)	85	999	76	453	908	185	216	21	677	157	554	30
Ideal Flow (vphpl)	1900	1900	1900	1900	1900	1900	1900	1900	1900	1900	1900	1900
Lane Width	11	11	11	11	11	11	11	11	11	11	11	11
Total Lost time (s)	6.0	6.0		6.0	6.0	6.0	6.0	6.0		6.0	6.0	
Lane Util. Factor	1.00	0.95		1.00	0.95	0.88	1.00	1.00		0.97	1.00	
Frt	1.00	0.99		1.00	1.00	0.85	1.00	0.85		1.00	0.99	
Flt Protected	0.95	1.00		0.95	1.00	1.00	0.95	1.00		0.95	1.00	
Satd. Flow (prot)	1711	3385		1711	3421	2694	1711	1539		3319	1787	
Flt Permitted	0.19	1.00		0.09	1.00	1.00	0.95	1.00		0.95	1.00	
Satd. Flow (perm)	334	3385		160	3421	2694	1711	1539		3319	1787	
Peak-hour factor, PHF	0.95	0.95	0.95	0.95	0.95	0.95	0.95	0.95	0.95	0.95	0.95	0.95
Adj. Flow (vph)	89	1052	80	477	956	195	227	22	713	165	583	32
RTOR Reduction (vph)	0	4	0	0	0	0	0	315	0	0	2	0
Lane Group Flow (vph)	89	1128	0	477	956	195	227	420	0	165	613	0
Turn Type	pm+pt			pm+pt		pt+ov	Split			Split		
Protected Phases	1	6		5	2	2 8	4	4		8	8	
Permitted Phases	6			2								
Actuated Green, G (s)	46.0	39.0		68.0	55.0	92.0	27.0	27.0		37.0	37.0	
Effective Green, g (s)	46.0	39.0		68.0	55.0	92.0	27.0	27.0		37.0	37.0	
Actuated g/C Ratio	0.31	0.26		0.45	0.37	0.61	0.18	0.18		0.25	0.25	
Clearance Time (s)	6.0	6.0		6.0	6.0		6.0	6.0		6.0	6.0	
Vehicle Extension (s)	3.0	3.0		3.0	3.0		3.0	3.0		3.0	3.0	
Lane Grp Cap (vph)	167	880		310	1254	1652	308	277		819	441	
v/s Ratio Prot	0.02	0.33		c0.24	0.28	0.07	0.13	c0.27		0.05	c0.34	
v/s Ratio Perm	0.14			c0.46								
v/c Ratio	0.53	1.28		1.54	0.76	0.12	0.74	1.52		0.20	1.39	
Uniform Delay, d1	38.9	55.5		65.7	41.8	12.1	58.1	61.5		44.8	56.5	
Progression Factor	0.59	0.90		1.14	0.51	0.43	1.06	2.00		0.52	0.61	
Incremental Delay, d2	1.3	130.6		253.7	3.2	0.0	8.3	249.1		0.1	188.5	
Delay (s)	24.3	180.7		328.7	24.4	5.2	70.0	372.3		23.5	222.8	
Level of Service	C	F		F	C	A	E	F		C	F	
Approach Delay (s)		169.3			111.2			301.0			180.6	
Approach LOS		F			F			F			F	

Intersection Summary			
HCM Average Control Delay	178.2	HCM Level of Service	F
HCM Volume to Capacity ratio	1.46		
Actuated Cycle Length (s)	150.0	Sum of lost time (s)	18.0
Intersection Capacity Utilization	122.6%	ICU Level of Service	H
Analysis Period (min)	15		

c Critical Lane Group

Movement	EBL	EBT	EBR	WBL	WBT	WBR	NBL	NBT	NBR	SBL	SBT	SBR
Lane Configurations												
Volume (vph)	125	1820	99	169	1103	235	78	5	148	325	0	100
Ideal Flow (vphpl)	1900	1900	1900	1900	1900	1900	1900	1900	1900	1900	1900	1900
Total Lost time (s)	6.0	6.0		6.0	6.0	6.0	6.0	6.0		6.0	6.0	
Lane Util. Factor	1.00	0.95		1.00	0.95	1.00	1.00	1.00		0.95	0.95	
Frt	1.00	0.99		1.00	1.00	0.85	1.00	0.85		1.00	0.93	
Flt Protected	0.95	1.00		0.95	1.00	1.00	0.95	1.00		0.95	0.97	
Satd. Flow (prot)	1770	3512		1770	3539	1583	1770	1592		1681	1600	
Flt Permitted	0.15	1.00		0.05	1.00	1.00	0.95	1.00		0.95	0.97	
Satd. Flow (perm)	281	3512		94	3539	1583	1770	1592		1681	1600	
Peak-hour factor, PHF	0.95	0.95	0.95	0.95	0.95	0.95	0.95	0.95	0.95	0.95	0.95	0.95
Adj. Flow (vph)	132	1916	104	178	1161	247	82	5	156	342	0	105
RTOR Reduction (vph)	0	2	0	0	0	103	0	99	0	0	23	0
Lane Group Flow (vph)	132	2018	0	178	1161	144	82	62	0	229	195	0
Turn Type	pm+pt			pm+pt		Perm	Split			Split		
Protected Phases	7	4		3	8		2	2		6	6	
Permitted Phases	4			8		8						
Actuated Green, G (s)	88.8	79.0		89.2	79.2	79.2	18.0	18.0		19.0	19.0	
Effective Green, g (s)	88.8	79.0		89.2	79.2	79.2	18.0	18.0		19.0	19.0	
Actuated g/C Ratio	0.59	0.53		0.59	0.53	0.53	0.12	0.12		0.13	0.13	
Clearance Time (s)	6.0	6.0		6.0	6.0	6.0	6.0	6.0		6.0	6.0	
Vehicle Extension (s)	3.0	3.0		3.0	3.0	3.0	3.0	3.0		3.0	3.0	
Lane Grp Cap (vph)	264	1850		168	1869	836	212	191		213	203	
v/s Ratio Prot	0.03	c0.57		c0.07	0.33		c0.05	0.04		c0.14	0.12	
v/s Ratio Perm	0.26			0.56		0.09						
v/c Ratio	0.50	1.09		1.06	0.62	0.17	0.39	0.32		1.08	0.96	
Uniform Delay, d1	17.8	35.5		72.2	24.9	18.4	60.9	60.4		65.5	65.1	
Progression Factor	0.87	0.65		1.12	0.68	0.25	1.00	1.00		1.00	1.00	
Incremental Delay, d2	1.1	48.3		86.0	0.6	0.1	5.3	4.4		83.0	54.0	
Delay (s)	16.5	71.5		166.5	17.4	4.6	66.2	64.8		148.5	119.1	
Level of Service	B	E		F	B	A	E	E		F	F	
Approach Delay (s)		68.1			32.2			65.3			134.2	
Approach LOS		E			C			E			F	

Intersection Summary			
HCM Average Control Delay	61.8	HCM Level of Service	E
HCM Volume to Capacity ratio	0.99		
Actuated Cycle Length (s)	150.0	Sum of lost time (s)	24.0
Intersection Capacity Utilization	104.3%	ICU Level of Service	G
Analysis Period (min)	15		
c Critical Lane Group			

Movement	WBL	WBR	NBT	NBR	SBL	SBT
Lane Configurations						
Volume (vph)	395	0	219	468	176	150
Ideal Flow (vphpl)	1900	1900	1900	1900	1900	1900
Total Lost time (s)	6.0		6.0	6.0	6.0	6.0
Lane Util. Factor	1.00		1.00	1.00	1.00	1.00
Frt	1.00		1.00	0.85	1.00	1.00
Flt Protected	0.95		1.00	1.00	0.95	1.00
Satd. Flow (prot)	1770		1863	1583	1770	1863
Flt Permitted	0.95		1.00	1.00	0.61	1.00
Satd. Flow (perm)	1770		1863	1583	1145	1863
Peak-hour factor, PHF	0.95	0.95	0.95	0.95	0.95	0.95
Adj. Flow (vph)	416	0	231	493	185	158
RTOR Reduction (vph)	0	0	0	230	0	0
Lane Group Flow (vph)	416	0	231	263	185	158
Turn Type		Perm		Perm	Perm	
Protected Phases	8		2			6
Permitted Phases		8		2	6	
Actuated Green, G (s)	23.0		40.0	40.0	40.0	40.0
Effective Green, g (s)	23.0		40.0	40.0	40.0	40.0
Actuated g/C Ratio	0.31		0.53	0.53	0.53	0.53
Clearance Time (s)	6.0		6.0	6.0	6.0	6.0
Vehicle Extension (s)	3.0		3.0	3.0	3.0	3.0
Lane Grp Cap (vph)	543		994	844	611	994
v/s Ratio Prot	c0.24		0.12			0.08
v/s Ratio Perm				c0.17	0.16	
v/c Ratio	0.77		0.23	0.31	0.30	0.16
Uniform Delay, d1	23.6		9.3	9.8	9.7	8.9
Progression Factor	0.84		1.00	1.00	1.00	1.00
Incremental Delay, d2	4.6		0.5	1.0	1.3	0.3
Delay (s)	24.4		9.9	10.8	11.0	9.3
Level of Service	C		A	B	B	A
Approach Delay (s)	24.4		10.5			10.2
Approach LOS	C		B			B

Intersection Summary			
HCM Average Control Delay	14.3	HCM Level of Service	B
HCM Volume to Capacity ratio	0.48		
Actuated Cycle Length (s)	75.0	Sum of lost time (s)	12.0
Intersection Capacity Utilization	58.2%	ICU Level of Service	B
Analysis Period (min)	15		
c Critical Lane Group			

Movement	EBL	EBT	EBR	WBL	WBT	WBR	NBL	NBT	NBR	SBL	SBT	SBR
Lane Configurations												
Volume (vph)	227	420	85	0	181	85	87	719	0	225	533	215
Ideal Flow (vphpl)	1900	1900	1900	1900	1900	1900	1900	1900	1900	1900	1900	1900
Total Lost time (s)	6.0	6.0	6.0		6.0	6.0		6.0		6.0	6.0	
Lane Util. Factor	1.00	0.95	1.00		0.95	1.00		0.95		0.91	0.91	
Frt	1.00	1.00	0.85		1.00	0.85		1.00		1.00	0.96	
Flt Protected	0.95	1.00	1.00		1.00	1.00		0.99		0.95	1.00	
Satd. Flow (prot)	1770	3539	1583		3539	1583		3520		1610	3244	
Flt Permitted	0.37	1.00	1.00		1.00	1.00		0.99		0.95	1.00	
Satd. Flow (perm)	686	3539	1583		3539	1583		3520		1610	3244	
Peak-hour factor, PHF	0.95	0.95	0.95	0.95	0.95	0.95	0.95	0.95	0.95	0.95	0.95	0.95
Adj. Flow (vph)	239	442	89	0	191	89	92	757	0	237	561	226
RTOR Reduction (vph)	0	0	66	0	0	81	0	0	0	0	25	0
Lane Group Flow (vph)	239	442	23	0	191	8	0	849	0	213	786	0
Turn Type	pm+pt		Perm			Perm	Split			Split		
Protected Phases	7	4			8		2	2		6	6	
Permitted Phases	4		4			8						
Actuated Green, G (s)	38.8	38.8	38.8		13.4	13.4		49.2		44.0	44.0	
Effective Green, g (s)	38.8	38.8	38.8		13.4	13.4		49.2		44.0	44.0	
Actuated g/C Ratio	0.26	0.26	0.26		0.09	0.09		0.33		0.29	0.29	
Clearance Time (s)	6.0	6.0	6.0		6.0	6.0		6.0		6.0	6.0	
Vehicle Extension (s)	3.0	3.0	3.0		3.0	3.0		3.0		3.0	3.0	
Lane Grp Cap (vph)	318	915	409		316	141		1155		472	952	
v/s Ratio Prot	c0.10	0.12			0.05			c0.24		0.13	c0.24	
v/s Ratio Perm	c0.10		0.01			0.01						
v/c Ratio	0.75	0.48	0.06		0.60	0.06		0.74		0.45	0.83	
Uniform Delay, d1	47.9	47.1	41.8		65.7	62.5		44.6		43.2	49.4	
Progression Factor	0.92	0.93	0.85		0.84	1.05		0.91		0.56	0.52	
Incremental Delay, d2	9.1	0.4	0.1		3.2	0.2		0.4		2.9	7.7	
Delay (s)	53.4	44.1	35.7		58.5	66.0		40.9		26.9	33.2	
Level of Service	D	D	D		E	E		D		C	C	
Approach Delay (s)		46.0			60.9			40.9			31.9	
Approach LOS		D			E			D			C	

Intersection Summary			
HCM Average Control Delay	41.0	HCM Level of Service	D
HCM Volume to Capacity ratio	0.76		
Actuated Cycle Length (s)	150.0	Sum of lost time (s)	18.0
Intersection Capacity Utilization	78.7%	ICU Level of Service	D
Analysis Period (min)	15		
c Critical Lane Group			

Movement	EBL	EBT	EBR	WBL	WBT	WBR	NBL	NBT	NBR	SBL	SBT	SBR
Lane Configurations												
Volume (vph)	10	1293	90	50	891	10	105	5	135	5	5	0
Ideal Flow (vphpl)	1900	1900	1900	1900	1900	1900	1900	1900	1900	1900	1900	1900
Total Lost time (s)	6.0	6.0		6.0	6.0		6.0	6.0			6.0	
Lane Util. Factor	1.00	0.95		1.00	0.95		1.00	1.00			1.00	
Frt	1.00	0.99		1.00	1.00		1.00	0.86			1.00	
Flt Protected	0.95	1.00		0.95	1.00		0.95	1.00			0.98	
Satd. Flow (prot)	1770	3505		1770	3533		1770	1593			1817	
Flt Permitted	0.29	1.00		0.08	1.00		0.75	1.00			0.90	
Satd. Flow (perm)	537	3505		140	3533		1399	1593			1685	
Peak-hour factor, PHF	0.95	0.95	0.95	0.95	0.95	0.95	0.95	0.95	0.95	0.95	0.95	0.95
Adj. Flow (vph)	11	1361	95	53	938	11	111	5	142	5	5	0
RTOR Reduction (vph)	0	4	0	0	1	0	0	99	0	0	0	0
Lane Group Flow (vph)	11	1452	0	53	948	0	111	48	0	0	10	0
Turn Type	Perm			pm+pt			Perm			Perm		
Protected Phases		4		3	8			2			6	
Permitted Phases	4			8			2			6		
Actuated Green, G (s)	81.2	81.2		93.4	93.4		44.6	44.6			44.6	
Effective Green, g (s)	81.2	81.2		93.4	93.4		44.6	44.6			44.6	
Actuated g/C Ratio	0.54	0.54		0.62	0.62		0.30	0.30			0.30	
Clearance Time (s)	6.0	6.0		6.0	6.0		6.0	6.0			6.0	
Vehicle Extension (s)	3.0	3.0		3.0	3.0		3.0	3.0			3.0	
Lane Grp Cap (vph)	291	1897		155	2200		416	474			501	
v/s Ratio Prot		c0.41		0.01	c0.27			0.03				
v/s Ratio Perm	0.02			0.20			c0.08				0.01	
v/c Ratio	0.04	0.77		0.34	0.43		0.27	0.10			0.02	
Uniform Delay, d1	16.1	26.9		21.3	14.6		40.2	38.2			37.3	
Progression Factor	0.46	0.46		1.00	1.00		1.00	1.00			1.00	
Incremental Delay, d2	0.1	1.8		1.3	0.1		1.6	0.4			0.1	
Delay (s)	7.4	14.1		22.6	14.7		41.8	38.6			37.3	
Level of Service	A	B		C	B		D	D			D	
Approach Delay (s)		14.0			15.1			40.0			37.3	
Approach LOS		B			B			D			D	

Intersection Summary			
HCM Average Control Delay	17.0	HCM Level of Service	B
HCM Volume to Capacity ratio	0.59		
Actuated Cycle Length (s)	150.0	Sum of lost time (s)	18.0
Intersection Capacity Utilization	61.8%	ICU Level of Service	B
Analysis Period (min)	15		
c Critical Lane Group			

Movement	EBL	EBT	EBR	WBL	WBT	WBR	NBL	NBT	NBR	SBL	SBT	SBR
Lane Configurations												
Volume (vph)	46	533	711	223	735	45	902	652	171	86	904	28
Ideal Flow (vphpl)	1900	1900	1900	1900	1900	1900	1900	1900	1900	1900	1900	1900
Total Lost time (s)	6.0	6.0	6.0	6.0	6.0		6.0	6.0	6.0	6.0	6.0	
Lane Util. Factor	1.00	0.95	1.00	0.97	0.95		0.97	0.95	1.00	1.00	0.95	
Frt	1.00	1.00	0.85	1.00	0.99		1.00	1.00	0.85	1.00	1.00	
Flt Protected	0.95	1.00	1.00	0.95	1.00		0.95	1.00	1.00	0.95	1.00	
Satd. Flow (prot)	1770	3539	1583	3433	3509		3433	3539	1583	1770	3524	
Flt Permitted	0.95	1.00	1.00	0.95	1.00		0.95	1.00	1.00	0.95	1.00	
Satd. Flow (perm)	1770	3539	1583	3433	3509		3433	3539	1583	1770	3524	
Peak-hour factor, PHF	0.95	0.95	0.95	0.95	0.95	0.95	0.95	0.95	0.95	0.95	0.95	0.95
Adj. Flow (vph)	48	561	748	235	774	47	949	686	180	91	952	29
RTOR Reduction (vph)	0	0	297	0	3	0	0	0	132	0	2	0
Lane Group Flow (vph)	48	561	451	235	818	0	949	686	48	91	979	0
Turn Type	Prot		Perm	Prot			Split		Perm	Split		
Protected Phases	7	4		3	8		1	1		2	2	
Permitted Phases			4						1			
Actuated Green, G (s)	5.6	37.6	37.6	14.6	46.6		37.0	37.0	37.0	36.8	36.8	
Effective Green, g (s)	5.6	37.6	37.6	14.6	46.6		37.0	37.0	37.0	36.8	36.8	
Actuated g/C Ratio	0.04	0.25	0.25	0.10	0.31		0.25	0.25	0.25	0.25	0.25	
Clearance Time (s)	6.0	6.0	6.0	6.0	6.0		6.0	6.0	6.0	6.0	6.0	
Vehicle Extension (s)	3.0	3.0	3.0	3.0	3.0		3.0	3.0	3.0	3.0	3.0	
Lane Grp Cap (vph)	66	887	397	334	1090		847	873	390	434	865	
v/s Ratio Prot	0.03	0.16		c0.07	c0.23		c0.28	0.19		0.05	c0.28	
v/s Ratio Perm			c0.28						0.03			
v/c Ratio	0.73	0.63	1.13	0.70	0.75		1.12	0.79	0.12	0.21	1.13	
Uniform Delay, d1	71.4	50.0	56.2	65.6	46.5		56.5	52.8	43.9	45.0	56.6	
Progression Factor	1.03	1.00	0.97	0.61	0.87		0.64	0.63	0.30	0.76	0.81	
Incremental Delay, d2	3.6	0.1	63.9	5.6	2.5		58.6	1.2	0.0	1.0	73.1	
Delay (s)	77.3	50.3	118.3	45.9	42.9		94.9	34.4	13.3	35.3	118.9	
Level of Service	E	D	F	D	D		F	C	B	D	F	
Approach Delay (s)		88.7			43.6			63.9			111.8	
Approach LOS		F			D			E			F	

Intersection Summary			
HCM Average Control Delay	75.9	HCM Level of Service	E
HCM Volume to Capacity ratio	1.14		
Actuated Cycle Length (s)	150.0	Sum of lost time (s)	30.0
Intersection Capacity Utilization	96.7%	ICU Level of Service	F
Analysis Period (min)	15		
c Critical Lane Group			

Movement	EBL	EBT	EBR	WBL	WBT	WBR	NBL	NBT	NBR	SBL	SBT	SBR
Lane Configurations												
Volume (vph)	142	544	171	44	700	81	257	32	9	110	32	68
Ideal Flow (vphpl)	1900	1900	1900	1900	1900	1900	1900	1900	1900	1900	1900	1900
Total Lost time (s)	6.0	6.0	6.0	6.0	6.0	6.0	6.0	6.0	6.0	6.0	6.0	
Lane Util. Factor	1.00	0.95	1.00	1.00	0.95	1.00	0.95	0.95	1.00	1.00	1.00	
Frt	1.00	1.00	0.85	1.00	1.00	0.85	1.00	1.00	0.85	1.00	0.90	
Flt Protected	0.95	1.00	1.00	0.95	1.00	1.00	0.95	0.96	1.00	0.95	1.00	
Satd. Flow (prot)	1770	3539	1583	1770	3539	1583	1681	1703	1583	1770	1673	
Flt Permitted	0.30	1.00	1.00	0.40	1.00	1.00	0.95	0.65	1.00	0.95	1.00	
Satd. Flow (perm)	554	3539	1583	737	3539	1583	1681	1144	1583	1770	1673	
Peak-hour factor, PHF	0.95	0.95	0.95	0.95	0.95	0.95	0.95	0.95	0.95	0.95	0.95	0.95
Adj. Flow (vph)	149	573	180	46	737	85	271	34	9	116	34	72
RTOR Reduction (vph)	0	0	106	0	0	50	0	0	7	0	55	0
Lane Group Flow (vph)	149	573	74	46	737	35	152	153	2	116	51	0
Turn Type	Perm		Perm	Perm		Perm	Prot		Perm	Prot		
Protected Phases		4			8		5	2		1	6	
Permitted Phases	4		4	8		8			2			
Actuated Green, G (s)	30.8	30.8	30.8	30.8	30.8	30.8	8.8	27.9	19.1	7.1	17.4	
Effective Green, g (s)	30.8	30.8	30.8	30.8	30.8	30.8	8.8	27.9	19.1	7.1	17.4	
Actuated g/C Ratio	0.41	0.41	0.41	0.41	0.41	0.41	0.12	0.37	0.25	0.09	0.23	
Clearance Time (s)	6.0	6.0	6.0	6.0	6.0	6.0	6.0	6.0	6.0	6.0	6.0	
Vehicle Extension (s)	3.0	3.0	3.0	3.0	3.0	3.0	3.0	3.0	3.0	3.0	3.0	
Lane Grp Cap (vph)	228	1453	650	303	1453	650	197	491	403	168	388	
v/s Ratio Prot		0.16			0.21		c0.09	0.04		0.07	0.03	
v/s Ratio Perm	c0.27		0.05	0.06		0.02		c0.08	0.00			
v/c Ratio	0.65	0.39	0.11	0.15	0.51	0.05	0.77	0.31	0.01	0.69	0.13	
Uniform Delay, d1	17.8	15.5	13.7	13.9	16.5	13.3	32.1	16.7	20.9	32.9	22.8	
Progression Factor	0.70	0.43	0.10	0.34	0.59	0.75	1.00	1.00	1.00	1.00	1.00	
Incremental Delay, d2	12.2	0.7	0.3	0.1	0.1	0.0	16.9	0.4	0.0	11.6	0.7	
Delay (s)	24.7	7.3	1.6	4.8	9.9	10.0	49.0	17.1	20.9	44.4	23.5	
Level of Service	C	A	A	A	A	B	D	B	C	D	C	
Approach Delay (s)		9.1			9.6			32.7			34.4	
Approach LOS		A			A			C			C	

Intersection Summary			
HCM Average Control Delay	14.9	HCM Level of Service	B
HCM Volume to Capacity ratio	0.52		
Actuated Cycle Length (s)	75.0	Sum of lost time (s)	12.0
Intersection Capacity Utilization	56.8%	ICU Level of Service	B
Analysis Period (min)	15		
c Critical Lane Group			

Movement	EBL	EBR	NBL	NBT	SBT	SBR
Lane Configurations						
Volume (veh/h)	308	227	264	308	188	316
Sign Control	Stop			Free	Free	
Grade	0%			0%	0%	
Peak Hour Factor	0.95	0.95	0.95	0.95	0.95	0.95
Hourly flow rate (vph)	324	239	278	324	198	333
Pedestrians						
Lane Width (ft)						
Walking Speed (ft/s)						
Percent Blockage						
Right turn flare (veh)						
Median type				None	None	
Median storage veh)						
Upstream signal (ft)					1305	
pX, platoon unblocked						
vC, conflicting volume	1078	198	531			
vC1, stage 1 conf vol						
vC2, stage 2 conf vol						
vCu, unblocked vol	1078	198	531			
tC, single (s)	6.4	6.2	4.1			
tC, 2 stage (s)						
tF (s)	3.5	3.3	2.2			
p0 queue free %	0	72	73			
cM capacity (veh/h)	177	843	1037			

Direction, Lane #	EB 1	EB 2	NB 1	NB 2	SB 1	SB 2
Volume Total	324	239	278	324	198	333
Volume Left	324	0	278	0	0	0
Volume Right	0	239	0	0	0	333
cSH	177	843	1037	1700	1700	1700
Volume to Capacity	1.83	0.28	0.27	0.19	0.12	0.20
Queue Length 95th (ft)	588	29	27	0	0	0
Control Delay (s)	439.0	10.9	9.7	0.0	0.0	0.0
Lane LOS	F	B	A			
Approach Delay (s)	257.4		4.5		0.0	
Approach LOS	F					

Intersection Summary			
Average Delay	87.1		
Intersection Capacity Utilization	51.6%	ICU Level of Service	A
Analysis Period (min)	15		

Movement	EBL	EBT	EBR	WBL	WBT	WBR	NBL	NBT	NBR	SBL	SBT	SBR
Lane Configurations												
Volume (vph)	14	58	354	523	75	334	7	1500	642	324	1499	14
Ideal Flow (vphpl)	1900	1900	1900	1900	1900	1900	1900	1900	1900	1900	1900	1900
Total Lost time (s)		6.0		6.0	6.0		6.0	6.0	6.0	6.0	6.0	
Lane Util. Factor		0.95		0.97	1.00		1.00	0.95	1.00	1.00	0.91	
Frt		0.88		1.00	0.88		1.00	1.00	0.85	1.00	1.00	
Flt Protected		1.00		0.95	1.00		0.95	1.00	1.00	0.95	1.00	
Satd. Flow (prot)		3093		3433	1635		1770	3539	1583	1770	5078	
Flt Permitted		1.00		0.95	1.00		0.13	1.00	1.00	0.06	1.00	
Satd. Flow (perm)		3093		3433	1635		247	3539	1583	106	5078	
Peak-hour factor, PHF	0.95	0.95	0.95	0.95	0.95	0.95	0.95	0.95	0.95	0.95	0.95	0.95
Adj. Flow (vph)	15	61	373	551	79	352	7	1579	676	341	1578	15
RTOR Reduction (vph)	0	79	0	0	107	0	0	0	215	0	0	0
Lane Group Flow (vph)	0	370	0	551	324	0	7	1579	461	341	1593	0
Turn Type	Split			Split			pm+pt		Perm	pm+pt		
Protected Phases	4	4		8	8		5	2		1	6	
Permitted Phases							2		2	6		
Actuated Green, G (s)		16.0		25.0	25.0		65.3	64.0	64.0	91.0	83.7	
Effective Green, g (s)		16.0		25.0	25.0		65.3	64.0	64.0	91.0	83.7	
Actuated g/C Ratio		0.11		0.17	0.17		0.44	0.43	0.43	0.61	0.56	
Clearance Time (s)		6.0		6.0	6.0		6.0	6.0	6.0	6.0	6.0	
Vehicle Extension (s)		3.0		3.0	3.0		3.0	3.0	3.0	3.0	3.0	
Lane Grp Cap (vph)		330		572	273		121	1510	675	297	2834	
v/s Ratio Prot		c0.12		0.16	c0.20		0.00	0.45		c0.16	0.31	
v/s Ratio Perm							0.02		0.29	c0.53		
v/c Ratio		1.49dr		0.96	1.19		0.06	1.05	0.68	1.15	0.56	
Uniform Delay, d1		67.0		62.0	62.5		24.1	43.0	34.8	66.7	21.3	
Progression Factor		1.00		0.51	0.49		0.17	0.15	0.17	0.91	0.47	
Incremental Delay, d2		86.8		26.7	112.9		0.0	22.8	0.5	70.7	0.1	
Delay (s)		153.8		58.3	143.3		4.1	29.1	6.5	131.4	10.1	
Level of Service		F		E	F		A	C	A	F	B	
Approach Delay (s)		153.8			95.6			22.3			31.5	
Approach LOS		F			F			C			C	

Intersection Summary			
HCM Average Control Delay	48.7	HCM Level of Service	D
HCM Volume to Capacity ratio	1.12		
Actuated Cycle Length (s)	150.0	Sum of lost time (s)	18.0
Intersection Capacity Utilization	117.4%	ICU Level of Service	H
Analysis Period (min)	15		

dr Defacto Right Lane. Recode with 1 though lane as a right lane.
c Critical Lane Group

Movement	EBL	EBT	EBR	WBL	WBT	WBR	NBL	NBT	NBR	SBL	SBT	SBR
Lane Configurations												
Volume (vph)	27	959	44	0	767	64	88	79	0	78	45	84
Ideal Flow (vphpl)	1900	1900	1900	1900	1900	1900	1900	1900	1900	1900	1900	1900
Total Lost time (s)	6.0	6.0			6.0		6.0	6.0		6.0	6.0	
Lane Util. Factor	1.00	0.95			0.95		1.00	0.95		1.00	0.95	
Frt	1.00	0.99			0.99		1.00	1.00		1.00	0.90	
Flt Protected	0.95	1.00			1.00		0.95	1.00		0.95	1.00	
Satd. Flow (prot)	1770	3516			3499		1770	3539		1770	3193	
Flt Permitted	0.13	1.00			1.00		0.95	1.00		0.95	1.00	
Satd. Flow (perm)	233	3516			3499		1770	3539		1770	3193	
Peak-hour factor, PHF	0.95	0.95	0.95	0.95	0.95	0.95	0.95	0.95	0.95	0.95	0.95	0.95
Adj. Flow (vph)	28	1009	46	0	807	67	93	83	0	82	47	88
RTOR Reduction (vph)	0	2	0	0	5	0	0	0	0	0	77	0
Lane Group Flow (vph)	28	1053	0	0	869	0	93	83	0	82	58	0
Turn Type	pm+pt			pm+pt			Prot			Prot		
Protected Phases	7	4		3	8		5	2		1	6	
Permitted Phases	4			8								
Actuated Green, G (s)	60.6	60.6			49.9		51.8	59.1		12.3	19.6	
Effective Green, g (s)	60.6	60.6			49.9		51.8	59.1		12.3	19.6	
Actuated g/C Ratio	0.40	0.40			0.33		0.35	0.39		0.08	0.13	
Clearance Time (s)	6.0	6.0			6.0		6.0	6.0		6.0	6.0	
Vehicle Extension (s)	3.0	3.0			3.0		3.0	3.0		3.0	3.0	
Lane Grp Cap (vph)	142	1420			1164		611	1394		145	417	
v/s Ratio Prot	0.01	c0.30			0.25		c0.05	0.02		c0.05	c0.02	
v/s Ratio Perm	0.07											
v/c Ratio	0.20	0.74			0.75		0.15	0.06		0.57	0.14	
Uniform Delay, d1	31.2	38.0			44.4		33.9	28.2		66.3	57.7	
Progression Factor	0.55	0.62			1.02		1.05	0.95		1.00	1.00	
Incremental Delay, d2	0.3	0.9			2.5		0.5	0.1		5.0	0.2	
Delay (s)	17.4	24.3			47.7		36.1	27.0		71.3	57.9	
Level of Service	B	C			D		D	C		E	E	
Approach Delay (s)		24.1			47.7			31.8			62.9	
Approach LOS		C			D			C			E	

Intersection Summary			
HCM Average Control Delay	37.1	HCM Level of Service	D
HCM Volume to Capacity ratio	0.46		
Actuated Cycle Length (s)	150.0	Sum of lost time (s)	18.0
Intersection Capacity Utilization	51.7%	ICU Level of Service	A
Analysis Period (min)	15		
c Critical Lane Group			

Movement	EBL	EBT	EBR	WBL	WBT	WBR	NBL	NBT	NBR	SBL	SBT	SBR
Lane Configurations												
Volume (vph)	36	649	126	552	340	23	172	379	687	32	304	44
Ideal Flow (vphpl)	1900	1900	1900	1900	1900	1900	1900	1900	1900	1900	1900	1900
Total Lost time (s)	6.0	6.0		6.0	6.0		6.0	6.0		6.0	6.0	
Lane Util. Factor	1.00	0.95		1.00	0.95		1.00	1.00		1.00	1.00	
Frt	1.00	0.98		1.00	0.99		1.00	0.90		1.00	0.98	
Flt Protected	0.95	1.00		0.95	1.00		0.95	1.00		0.95	1.00	
Satd. Flow (prot)	1593	3107		1593	3155		1593	1514		1593	1645	
Flt Permitted	0.95	1.00		0.95	1.00		0.95	1.00		0.95	1.00	
Satd. Flow (perm)	1593	3107		1593	3155		1593	1514		1593	1645	
Peak-hour factor, PHF	0.95	0.95	0.95	0.95	0.95	0.95	0.95	0.95	0.95	0.95	0.95	0.95
Adj. Flow (vph)	38	683	133	581	358	24	181	399	723	34	320	46
RTOR Reduction (vph)	0	11	0	0	4	0	0	42	0	0	3	0
Lane Group Flow (vph)	38	805	0	581	378	0	181	1080	0	34	363	0
Turn Type	Prot			Prot			Prot			Prot		
Protected Phases	5	2		1	6		3	8		7	4	
Permitted Phases												
Actuated Green, G (s)	17.0	25.8		32.0	40.8		20.6	62.0		6.2	47.6	
Effective Green, g (s)	17.0	25.8		32.0	40.8		20.6	62.0		6.2	47.6	
Actuated g/C Ratio	0.11	0.17		0.21	0.27		0.14	0.41		0.04	0.32	
Clearance Time (s)	6.0	6.0		6.0	6.0		6.0	6.0		6.0	6.0	
Vehicle Extension (s)	3.0	3.0		3.0	3.0		3.0	3.0		3.0	3.0	
Lane Grp Cap (vph)	181	534		340	858		219	626		66	522	
v/s Ratio Prot	0.02	c0.26		c0.36	0.12		c0.11	c0.71		0.02	0.22	
v/s Ratio Perm												
v/c Ratio	0.21	1.51		1.71	0.44		0.83	1.72		0.52	0.69	
Uniform Delay, d1	60.4	62.1		59.0	45.2		63.0	44.0		70.4	44.8	
Progression Factor	1.11	0.71		0.59	0.76		1.00	1.00		1.00	1.00	
Incremental Delay, d2	2.3	236.9		330.1	1.5		21.8	332.9		6.6	7.4	
Delay (s)	69.1	281.0		364.7	36.0		84.8	376.9		77.1	52.3	
Level of Service	E	F		F	D		F	F		E	D	
Approach Delay (s)		271.5			234.3			336.3			54.4	
Approach LOS		F			F			F			D	

Intersection Summary			
HCM Average Control Delay	260.6	HCM Level of Service	F
HCM Volume to Capacity ratio	1.66		
Actuated Cycle Length (s)	150.0	Sum of lost time (s)	24.0
Intersection Capacity Utilization	150.7%	ICU Level of Service	H
Analysis Period (min)	15		
c Critical Lane Group			

Movement	EBL	EBT	EBR	WBL	WBT	WBR	NBL	NBT	NBR	SBL	SBT	SBR
Lane Configurations												
Volume (vph)	12	0	9	500	0	95	46	2054	505	142	2078	19
Ideal Flow (vphpl)	1900	1900	1900	1900	1900	1900	1900	1900	1900	1900	1900	1900
Total Lost time (s)		6.0		6.0	6.0		6.0	6.0		6.0	6.0	
Lane Util. Factor		1.00		1.00	1.00		1.00	0.91		1.00	0.91	
Frt		0.94		1.00	0.85		1.00	0.97		1.00	1.00	
Flt Protected		0.97		0.95	1.00		0.95	1.00		0.95	1.00	
Satd. Flow (prot)		1709		1770	1583		1770	4935		1770	5078	
Flt Permitted		0.97		0.95	1.00		0.06	1.00		0.06	1.00	
Satd. Flow (perm)		1709		1770	1583		115	4935		106	5078	
Peak-hour factor, PHF	0.95	0.95	0.95	0.95	0.95	0.95	0.95	0.95	0.95	0.95	0.95	0.95
Adj. Flow (vph)	13	0	9	526	0	100	48	2162	532	149	2187	20
RTOR Reduction (vph)	0	9	0	0	68	0	0	29	0	0	0	0
Lane Group Flow (vph)	0	13	0	526	32	0	48	2665	0	149	2207	0
Turn Type	Split			Split			Perm			pm+pt		
Protected Phases	4	4		8	8			2		1	6	
Permitted Phases							2			6		
Actuated Green, G (s)		7.7		48.7	48.7		64.6	64.6		75.6	75.6	
Effective Green, g (s)		7.7		48.7	48.7		64.6	64.6		75.6	75.6	
Actuated g/C Ratio		0.05		0.32	0.32		0.43	0.43		0.50	0.50	
Clearance Time (s)		6.0		6.0	6.0		6.0	6.0		6.0	6.0	
Vehicle Extension (s)		3.0		3.0	3.0		3.0	3.0		3.0	3.0	
Lane Grp Cap (vph)		88		575	514		50	2125		109	2559	
v/s Ratio Prot		c0.01		c0.30	0.02			0.54		0.05	c0.43	
v/s Ratio Perm							0.42			c0.65		
v/c Ratio		0.15		0.91	0.06		0.96	1.25		1.37	0.86	
Uniform Delay, d1		68.0		48.7	34.9		41.4	42.7		74.7	32.6	
Progression Factor		1.00		0.88	1.00		0.78	0.84		1.63	0.67	
Incremental Delay, d2		0.8		9.1	0.0		101.6	117.5		200.1	2.9	
Delay (s)		68.8		51.8	34.9		133.8	153.3		322.1	24.7	
Level of Service		E		D	C		F	F		F	C	
Approach Delay (s)		68.8			49.1			153.0			43.5	
Approach LOS		E			D			F			D	

Intersection Summary			
HCM Average Control Delay	96.5	HCM Level of Service	F
HCM Volume to Capacity ratio	1.10		
Actuated Cycle Length (s)	150.0	Sum of lost time (s)	18.0
Intersection Capacity Utilization	108.2%	ICU Level of Service	G
Analysis Period (min)	15		
c Critical Lane Group			

Movement	EBL	EBT	EBR	WBL	WBT	WBR	NBL	NBT	NBR	SBL	SBT	SBR
Lane Configurations												
Volume (vph)	152	18	82	145	23	47	294	2356	603	0	2384	209
Ideal Flow (vphpl)	1900	1900	1900	1900	1900	1900	1900	1900	1900	1900	1900	1900
Total Lost time (s)	6.0	6.0		6.0	6.0	6.0	6.0	6.0	6.0		6.0	
Lane Util. Factor	0.97	0.95		0.97	0.95	1.00	1.00	0.91	1.00		0.91	
Frt	1.00	0.88		1.00	1.00	0.85	1.00	1.00	0.85		0.99	
Flt Protected	0.95	1.00		0.95	1.00	1.00	0.95	1.00	1.00		1.00	
Satd. Flow (prot)	3433	3104		3433	3539	1583	1770	5085	1583		5024	
Flt Permitted	0.95	1.00		0.95	1.00	1.00	0.05	1.00	1.00		1.00	
Satd. Flow (perm)	3433	3104		3433	3539	1583	86	5085	1583		5024	
Peak-hour factor, PHF	0.95	0.95	0.95	0.95	0.95	0.95	0.95	0.95	0.95	0.95	0.95	0.95
Adj. Flow (vph)	160	19	86	153	24	49	309	2480	635	0	2509	220
RTOR Reduction (vph)	0	80	0	0	0	45	0	0	131	0	7	0
Lane Group Flow (vph)	160	25	0	153	24	4	309	2480	504	0	2722	0
Turn Type	Prot			Prot		Perm	pm+pt		Perm	pm+pt		
Protected Phases	7	4		3	8		5	2		1	6	
Permitted Phases						8	2		2	6		
Actuated Green, G (s)	9.3	11.2		7.0	8.9	8.9	113.8	113.8	113.8		81.0	
Effective Green, g (s)	9.3	11.2		7.0	8.9	8.9	113.8	113.8	113.8		81.0	
Actuated g/C Ratio	0.06	0.07		0.05	0.06	0.06	0.76	0.76	0.76		0.54	
Clearance Time (s)	6.0	6.0		6.0	6.0	6.0	6.0	6.0	6.0		6.0	
Vehicle Extension (s)	3.0	3.0		3.0	3.0	3.0	3.0	3.0	3.0		3.0	
Lane Grp Cap (vph)	213	232		160	210	94	366	3858	1201		2713	
v/s Ratio Prot	c0.05	c0.01		0.04	0.01		c0.15	0.49			c0.54	
v/s Ratio Perm						0.00	0.49		0.32			
v/c Ratio	0.75	0.11		0.96	0.11	0.04	0.84	0.64	0.42		1.00	
Uniform Delay, d1	69.2	64.7		71.3	66.8	66.5	51.6	8.5	6.4		34.5	
Progression Factor	1.00	1.00		0.80	0.29	0.69	1.20	0.96	2.45		0.38	
Incremental Delay, d2	13.8	0.2		27.5	0.1	0.1	11.5	0.6	0.7		13.1	
Delay (s)	83.1	65.0		84.5	19.7	45.8	73.5	8.7	16.4		26.0	
Level of Service	F	E		F	B	D	E	A	B		C	
Approach Delay (s)		75.9			69.2			16.0			26.0	
Approach LOS		E			E			B			C	

Intersection Summary			
HCM Average Control Delay	24.3	HCM Level of Service	C
HCM Volume to Capacity ratio	0.85		
Actuated Cycle Length (s)	150.0	Sum of lost time (s)	18.0
Intersection Capacity Utilization	93.0%	ICU Level of Service	F
Analysis Period (min)	15		
c Critical Lane Group			

Movement	EBL	EBT	EBR	WBL	WBT	WBR	NBL	NBT	NBR	SBL	SBT	SBR
Lane Configurations												
Volume (vph)	0	0	0	91	30	327	683	2960	0	0	2663	488
Ideal Flow (vphpl)	1900	1900	1900	1900	1900	1900	1900	1900	1900	1900	1900	1900
Total Lost time (s)				6.0	6.0	6.0	6.0	6.0			6.0	6.0
Lane Util. Factor				0.95	0.95	1.00	0.97	0.86			0.81	1.00
Frt				1.00	1.00	0.85	1.00	1.00			1.00	0.85
Flt Protected				0.95	0.98	1.00	0.95	1.00			1.00	1.00
Satd. Flow (prot)				1681	1726	1583	3433	6408			7544	1583
Flt Permitted				0.95	0.98	1.00	0.95	1.00			1.00	1.00
Satd. Flow (perm)				1681	1726	1583	3433	6408			7544	1583
Peak-hour factor, PHF	0.95	0.95	0.95	0.95	0.95	0.95	0.95	0.95	0.95	0.95	0.95	0.95
Adj. Flow (vph)	0	0	0	96	32	344	719	3116	0	0	2803	514
RTOR Reduction (vph)	0	0	0	0	0	2	0	0	0	0	0	279
Lane Group Flow (vph)	0	0	0	63	65	342	719	3116	0	0	2803	235
Turn Type				Perm		Perm	Prot					Perm
Protected Phases					8		5	2			6	
Permitted Phases				8		8						6
Actuated Green, G (s)				35.0	35.0	35.0	34.4	103.0			62.6	62.6
Effective Green, g (s)				35.0	35.0	35.0	34.4	103.0			62.6	62.6
Actuated g/C Ratio				0.23	0.23	0.23	0.23	0.69			0.42	0.42
Clearance Time (s)				6.0	6.0	6.0	6.0	6.0			6.0	6.0
Vehicle Extension (s)				3.0	3.0	3.0	3.0	3.0			3.0	3.0
Lane Grp Cap (vph)				392	403	369	787	4400			3148	661
v/s Ratio Prot							c0.21	0.49			c0.37	
v/s Ratio Perm				0.04	0.04	c0.22						0.15
v/c Ratio				0.16	0.16	0.93	0.91	0.71			0.89	0.36
Uniform Delay, d1				45.8	45.8	56.3	56.4	14.3			40.5	29.9
Progression Factor				1.00	1.00	1.00	1.31	0.60			0.62	0.35
Incremental Delay, d2				0.2	0.2	29.0	10.9	0.7			2.5	0.9
Delay (s)				46.0	46.0	85.2	84.8	9.2			27.5	11.2
Level of Service				D	D	F	F	A			C	B
Approach Delay (s)		0.0			74.6			23.4			25.0	
Approach LOS		A			E			C			C	

Intersection Summary			
HCM Average Control Delay	27.2	HCM Level of Service	C
HCM Volume to Capacity ratio	0.91		
Actuated Cycle Length (s)	150.0	Sum of lost time (s)	18.0
Intersection Capacity Utilization	81.4%	ICU Level of Service	D
Analysis Period (min)	15		
c Critical Lane Group			

Movement	EBL	EBT	EBR	WBL	WBT	WBR	NBL	NBT	NBR	SBL	SBT	SBR
Lane Configurations												
Volume (vph)	698	0	209	0	0	0	0	2960	208	135	2663	0
Ideal Flow (vphpl)	1900	1900	1900	1900	1900	1900	1900	1900	1900	1900	1900	1900
Total Lost time (s)	6.0		6.0					6.0		6.0	6.0	
Lane Util. Factor	0.97		0.88					0.76		0.97	0.91	
Frt	1.00		0.85					0.99		1.00	1.00	
Flt Protected	0.95		1.00					1.00		0.95	1.00	
Satd. Flow (prot)	3433		2787					8410		3433	5085	
Flt Permitted	0.95		1.00					1.00		0.95	1.00	
Satd. Flow (perm)	3433		2787					8410		3433	5085	
Peak-hour factor, PHF	0.95	0.95	0.95	0.95	0.95	0.95	0.95	0.95	0.95	0.95	0.95	0.95
Adj. Flow (vph)	735	0	220	0	0	0	0	3116	219	142	2803	0
RTOR Reduction (vph)	0	0	3	0	0	0	0	8	0	0	0	0
Lane Group Flow (vph)	735	0	217	0	0	0	0	3327	0	142	2803	0
Turn Type	custom		custom							Prot		
Protected Phases								2		1	6	
Permitted Phases	4		4									
Actuated Green, G (s)	37.9		37.9					83.7		10.4	100.1	
Effective Green, g (s)	37.9		37.9					83.7		10.4	100.1	
Actuated g/C Ratio	0.25		0.25					0.56		0.07	0.67	
Clearance Time (s)	6.0		6.0					6.0		6.0	6.0	
Vehicle Extension (s)	3.0		3.0					3.0		3.0	3.0	
Lane Grp Cap (vph)	867		704					4693		238	3393	
v/s Ratio Prot								0.40		0.04	c0.55	
v/s Ratio Perm	c0.21		0.08									
v/c Ratio	0.85		0.31					0.71		0.60	0.83	
Uniform Delay, d1	53.3		45.4					24.2		67.8	18.5	
Progression Factor	1.00		1.00					1.00		1.41	0.93	
Incremental Delay, d2	7.7		0.3					0.9		2.0	1.2	
Delay (s)	61.0		45.7					25.2		97.5	18.5	
Level of Service	E		D					C		F	B	
Approach Delay (s)		57.5			0.0			25.2			22.3	
Approach LOS		E			A			C			C	

Intersection Summary			
HCM Average Control Delay	28.3	HCM Level of Service	C
HCM Volume to Capacity ratio	0.83		
Actuated Cycle Length (s)	150.0	Sum of lost time (s)	12.0
Intersection Capacity Utilization	81.4%	ICU Level of Service	D
Analysis Period (min)	15		
c Critical Lane Group			

Movement	WBL	WBR	NBT	NBR	SBL	SBT
Lane Configurations						
Volume (vph)	168	178	676	72	133	870
Ideal Flow (vphpl)	1900	1900	1900	1900	1900	1900
Total Lost time (s)	6.0		6.0		6.0	6.0
Lane Util. Factor	1.00		0.95		1.00	0.95
Frt	0.93		0.99		1.00	1.00
Flt Protected	0.98		1.00		0.95	1.00
Satd. Flow (prot)	1692		3488		1770	3539
Flt Permitted	0.98		1.00		0.28	1.00
Satd. Flow (perm)	1692		3488		524	3539
Peak-hour factor, PHF	0.95	0.95	0.95	0.95	0.95	0.95
Adj. Flow (vph)	177	187	712	76	140	916
RTOR Reduction (vph)	31	0	4	0	0	0
Lane Group Flow (vph)	333	0	784	0	140	916
Turn Type					pm+pt	
Protected Phases	8		2		1	6
Permitted Phases					6	
Actuated Green, G (s)	35.5		86.7		102.5	102.5
Effective Green, g (s)	35.5		86.7		102.5	102.5
Actuated g/C Ratio	0.24		0.58		0.68	0.68
Clearance Time (s)	6.0		6.0		6.0	6.0
Vehicle Extension (s)	3.0		3.0		3.0	3.0
Lane Grp Cap (vph)	400		2016		439	2418
v/s Ratio Prot	c0.20		0.22		0.02	c0.26
v/s Ratio Perm					0.20	
v/c Ratio	0.83		0.39		0.32	0.38
Uniform Delay, d1	54.4		17.2		9.7	10.1
Progression Factor	1.00		0.06		0.39	0.33
Incremental Delay, d2	13.9		0.4		0.0	0.0
Delay (s)	68.3		1.4		3.8	3.4
Level of Service	E		A		A	A
Approach Delay (s)	68.3		1.4			3.5
Approach LOS	E		A			A

Intersection Summary			
HCM Average Control Delay	13.4	HCM Level of Service	B
HCM Volume to Capacity ratio	0.50		
Actuated Cycle Length (s)	150.0	Sum of lost time (s)	12.0
Intersection Capacity Utilization	63.6%	ICU Level of Service	B
Analysis Period (min)	15		
c Critical Lane Group			

Movement	EBL	EBT	EBR	WBL	WBT	WBR	NBL	NBT	NBR	SBL	SBT	SBR
Lane Configurations												
Volume (vph)	231	45	54	72	54	114	162	3614	58	39	2410	77
Ideal Flow (vphpl)	1900	1900	1900	1900	1900	1900	1900	1900	1900	1900	1900	1900
Total Lost time (s)		6.0	6.0		6.0		6.0	6.0		6.0	6.0	
Lane Util. Factor		1.00	1.00		1.00		1.00	0.86		1.00	0.86	
Frt		1.00	0.85		0.94		1.00	1.00		1.00	1.00	
Flt Protected		0.96	1.00		0.99		0.95	1.00		0.95	1.00	
Satd. Flow (prot)		1788	1583		1718		1770	6393		1770	6378	
Flt Permitted		0.52	1.00		0.56		0.95	1.00		0.95	1.00	
Satd. Flow (perm)		967	1583		968		1770	6393		1770	6378	
Peak-hour factor, PHF	0.95	0.95	0.95	0.95	0.95	0.95	0.95	0.95	0.95	0.95	0.95	0.95
Adj. Flow (vph)	243	47	57	76	57	120	171	3804	61	41	2537	81
RTOR Reduction (vph)	0	0	33	0	21	0	0	1	0	0	3	0
Lane Group Flow (vph)	0	290	24	0	232	0	171	3864	0	41	2615	0
Turn Type	Perm		Perm	Perm			Prot			Prot		
Protected Phases		4			8		5	2		1	6	
Permitted Phases	4		4	8								
Actuated Green, G (s)		43.0	43.0		43.0		17.1	85.0		4.0	71.9	
Effective Green, g (s)		43.0	43.0		43.0		17.1	85.0		4.0	71.9	
Actuated g/C Ratio		0.29	0.29		0.29		0.11	0.57		0.03	0.48	
Clearance Time (s)		6.0	6.0		6.0		6.0	6.0		6.0	6.0	
Vehicle Extension (s)		3.0	3.0		3.0		3.0	3.0		3.0	3.0	
Lane Grp Cap (vph)		277	454		277		202	3623		47	3057	
v/s Ratio Prot							c0.10	c0.60		0.02	0.41	
v/s Ratio Perm		c0.30	0.02		0.24							
v/c Ratio		1.05	0.05		0.84		0.85	1.07		0.87	0.86	
Uniform Delay, d1		53.5	38.8		50.2		65.2	32.5		72.7	34.5	
Progression Factor		1.00	1.00		1.00		1.23	0.97		1.00	0.80	
Incremental Delay, d2		66.9	0.0		19.2		3.1	30.6		67.5	2.4	
Delay (s)		120.4	38.8		69.4		83.0	62.0		140.4	29.9	
Level of Service		F	D		E		F	E		F	C	
Approach Delay (s)		107.0			69.4			62.9			31.6	
Approach LOS		F			E			E			C	

Intersection Summary			
HCM Average Control Delay	53.8	HCM Level of Service	D
HCM Volume to Capacity ratio	1.08		
Actuated Cycle Length (s)	150.0	Sum of lost time (s)	18.0
Intersection Capacity Utilization	105.6%	ICU Level of Service	G
Analysis Period (min)	15		
c Critical Lane Group			

Movement	WBL	WBR	NBT	NBR	SBL	SBT
Lane Configurations						
Volume (veh/h)	0	98	1623	219	0	1838
Sign Control	Stop		Free			Free
Grade	0%		0%			0%
Peak Hour Factor	0.95	0.95	0.95	0.95	0.95	0.95
Hourly flow rate (vph)	0	103	1708	231	0	1935
Pedestrians						
Lane Width (ft)						
Walking Speed (ft/s)						
Percent Blockage						
Right turn flare (veh)						
Median type			None			None
Median storage veh)						
Upstream signal (ft)			1039			442
pX, platoon unblocked	0.75	0.64			0.64	
vC, conflicting volume	2469	685			1939	
vC1, stage 1 conf vol						
vC2, stage 2 conf vol						
vCu, unblocked vol	0	0			491	
tC, single (s)	6.8	6.9			4.1	
tC, 2 stage (s)						
tF (s)	3.5	3.3			2.2	
p0 queue free %	100	85			100	
cM capacity (veh/h)	763	693			683	

Direction, Lane #	WB 1	NB 1	NB 2	NB 3	SB 1	SB 2	SB 3
Volume Total	103	683	683	572	645	645	645
Volume Left	0	0	0	0	0	0	0
Volume Right	103	0	0	231	0	0	0
cSH	693	1700	1700	1700	1700	1700	1700
Volume to Capacity	0.15	0.40	0.40	0.34	0.38	0.38	0.38
Queue Length 95th (ft)	13	0	0	0	0	0	0
Control Delay (s)	11.1	0.0	0.0	0.0	0.0	0.0	0.0
Lane LOS	B						
Approach Delay (s)	11.1	0.0			0.0		
Approach LOS	B						

Intersection Summary			
Average Delay	0.3		
Intersection Capacity Utilization	49.0%	ICU Level of Service	A
Analysis Period (min)	15		

Movement	EBL	EBT	EBR	WBL	WBT	WBR	NBL	NBT	NBR	SBL	SBT	SBR
Lane Configurations												
Volume (vph)	149	35	53	47	27	86	1	3231	26	48	2302	75
Ideal Flow (vphpl)	1900	1900	1900	1900	1900	1900	1900	1900	1900	1900	1900	1900
Total Lost time (s)	6.0	6.0		6.0	6.0		6.0	6.0		6.0	6.0	
Lane Util. Factor	1.00	1.00		1.00	1.00		1.00	0.91		1.00	0.91	
Frt	1.00	0.91		1.00	0.89		1.00	1.00		1.00	1.00	
Flt Protected	0.95	1.00		0.95	1.00		0.95	1.00		0.95	1.00	
Satd. Flow (prot)	1770	1694		1770	1649		1770	5079		1770	5061	
Flt Permitted	0.95	1.00		0.95	1.00		0.04	1.00		0.04	1.00	
Satd. Flow (perm)	1770	1694		1770	1649		78	5079		76	5061	
Peak-hour factor, PHF	0.95	0.95	0.95	0.95	0.95	0.95	0.95	0.95	0.95	0.95	0.95	0.95
Adj. Flow (vph)	157	37	56	49	28	91	1	3401	27	51	2423	79
RTOR Reduction (vph)	0	37	0	0	58	0	0	0	0	0	2	0
Lane Group Flow (vph)	157	56	0	49	61	0	1	3428	0	51	2500	0
Turn Type	Split			Split			pm+pt			pm+pt		
Protected Phases	4	4		8	8		5	2		1	6	
Permitted Phases							2			6		
Actuated Green, G (s)	15.5	15.5		11.3	11.3		95.8	95.0		102.6	98.4	
Effective Green, g (s)	15.5	15.5		11.3	11.3		95.8	95.0		102.6	98.4	
Actuated g/C Ratio	0.10	0.10		0.08	0.08		0.64	0.63		0.68	0.66	
Clearance Time (s)	6.0	6.0		6.0	6.0		6.0	6.0		6.0	6.0	
Vehicle Extension (s)	3.0	3.0		3.0	3.0		3.0	3.0		3.0	3.0	
Lane Grp Cap (vph)	183	175		133	124		59	3217		99	3320	
v/s Ratio Prot	c0.09	0.03		0.03	c0.04		0.00	c0.67		c0.01	c0.49	
v/s Ratio Perm							0.01			0.34		
v/c Ratio	0.86	0.32		0.37	0.49		0.02	1.07		0.52	0.75	
Uniform Delay, d1	66.2	62.4		66.0	66.6		16.3	27.5		40.0	17.5	
Progression Factor	1.00	1.00		1.00	1.00		0.22	0.20		2.72	0.39	
Incremental Delay, d2	30.5	1.1		1.7	3.0		0.0	32.5		0.4	0.1	
Delay (s)	96.7	63.4		67.7	69.6		3.6	38.1		109.2	7.0	
Level of Service	F	E		E	E		A	D		F	A	
Approach Delay (s)		84.3			69.0			38.0			9.1	
Approach LOS		F			E			D			A	

Intersection Summary			
HCM Average Control Delay	29.1	HCM Level of Service	C
HCM Volume to Capacity ratio	1.02		
Actuated Cycle Length (s)	150.0	Sum of lost time (s)	30.0
Intersection Capacity Utilization	87.9%	ICU Level of Service	E
Analysis Period (min)	15		
c Critical Lane Group			

Movement	EBL	EBT	EBR	WBL	WBT	WBR	NBL	NBT	NBR	SBL	SBT	SBR
Lane Configurations												
Volume (veh/h)	84	43	10	5	110	6	9	151	10	1	175	110
Sign Control		Free			Free			Stop			Stop	
Grade		0%			0%			0%			0%	
Peak Hour Factor	0.95	0.95	0.95	0.95	0.95	0.95	0.95	0.95	0.95	0.95	0.95	0.95
Hourly flow rate (vph)	88	45	11	5	116	6	9	159	11	1	184	116
Pedestrians												
Lane Width (ft)												
Walking Speed (ft/s)												
Percent Blockage												
Right turn flare (veh)												
Median type		None			None							
Median storage veh)												
Upstream signal (ft)		1018										
pX, platoon unblocked												
vC, conflicting volume	122			56			562	360	51	442	362	119
vC1, stage 1 conf vol												
vC2, stage 2 conf vol												
vCu, unblocked vol	122			56			562	360	51	442	362	119
tC, single (s)	4.1			4.1			7.1	6.5	6.2	7.1	6.5	6.2
tC, 2 stage (s)												
tF (s)	2.2			2.2			3.5	4.0	3.3	3.5	4.0	3.3
p0 queue free %	94			100			96	70	99	100	65	88
cM capacity (veh/h)	1465			1549			267	531	1018	382	529	933

Direction, Lane #	EB 1	EB 2	WB 1	WB 2	NB 1	NB 2	SB 1
Volume Total	88	56	5	122	9	169	301
Volume Left	88	0	5	0	9	0	1
Volume Right	0	11	0	6	0	11	116
cSH	1465	1700	1549	1700	267	547	634
Volume to Capacity	0.06	0.03	0.00	0.07	0.04	0.31	0.47
Queue Length 95th (ft)	5	0	0	0	3	33	64
Control Delay (s)	7.6	0.0	7.3	0.0	19.0	14.5	15.7
Lane LOS	A		A		C	B	C
Approach Delay (s)	4.7		0.3		14.7		15.7
Approach LOS					B		C

Intersection Summary			
Average Delay	10.7		
Intersection Capacity Utilization	34.7%	ICU Level of Service	A
Analysis Period (min)	15		

Movement	EBL	EBT	EBR	WBL	WBT	WBR	NBL	NBT	NBR	SBL	SBT	SBR
Lane Configurations												
Volume (vph)	80	700	105	85	601	32	126	2	126	64	36	211
Ideal Flow (vphpl)	1900	1900	1900	1900	1900	1900	1900	1900	1900	1900	1900	1900
Total Lost time (s)	6.0	6.0	6.0	6.0	6.0			6.0	6.0	6.0	6.0	
Lane Util. Factor	1.00	0.95	1.00	1.00	0.95			1.00	1.00	1.00	1.00	
Frt	1.00	1.00	0.85	1.00	0.99			1.00	0.85	1.00	0.87	
Flt Protected	0.95	1.00	1.00	0.95	1.00			0.95	1.00	0.95	1.00	
Satd. Flow (prot)	1770	3539	1583	1770	3512			1775	1583	1770	1624	
Flt Permitted	0.40	1.00	1.00	0.17	1.00			0.52	1.00	0.67	1.00	
Satd. Flow (perm)	742	3539	1583	322	3512			977	1583	1249	1624	
Peak-hour factor, PHF	0.95	0.95	0.95	0.95	0.95	0.95	0.95	0.95	0.95	0.95	0.95	0.95
Adj. Flow (vph)	84	737	111	89	633	34	133	2	133	67	38	222
RTOR Reduction (vph)	0	0	79	0	6	0	0	0	81	0	118	0
Lane Group Flow (vph)	84	737	32	89	661	0	0	135	52	67	142	0
Turn Type	Perm		Perm	pm+pt			Perm		Perm	Perm		
Protected Phases		4		3	8			2			6	
Permitted Phases	4		4	8			2		2	6		
Actuated Green, G (s)	21.5	21.5	21.5	33.7	33.7			29.3	29.3	29.3	29.3	
Effective Green, g (s)	21.5	21.5	21.5	33.7	33.7			29.3	29.3	29.3	29.3	
Actuated g/C Ratio	0.29	0.29	0.29	0.45	0.45			0.39	0.39	0.39	0.39	
Clearance Time (s)	6.0	6.0	6.0	6.0	6.0			6.0	6.0	6.0	6.0	
Vehicle Extension (s)	3.0	3.0	3.0	3.0	3.0			3.0	3.0	3.0	3.0	
Lane Grp Cap (vph)	213	1015	454	264	1578			382	618	488	634	
v/s Ratio Prot		c0.21		0.03	c0.19						0.09	
v/s Ratio Perm	0.11		0.02	0.12				c0.14	0.03	0.05		
v/c Ratio	0.39	0.73	0.07	0.34	0.42			0.35	0.08	0.14	0.22	
Uniform Delay, d1	21.5	24.1	19.5	13.6	14.0			16.2	14.4	14.7	15.3	
Progression Factor	1.03	1.13	2.47	1.18	1.20			1.00	1.00	0.99	0.97	
Incremental Delay, d2	0.1	0.2	0.0	0.7	0.2			2.6	0.3	0.6	0.8	
Delay (s)	22.4	27.4	48.1	16.8	17.0			18.7	14.7	15.2	15.6	
Level of Service	C	C	D	B	B			B	B	B	B	
Approach Delay (s)		29.4			16.9			16.7			15.5	
Approach LOS		C			B			B			B	

Intersection Summary			
HCM Average Control Delay	21.8	HCM Level of Service	C
HCM Volume to Capacity ratio	0.53		
Actuated Cycle Length (s)	75.0	Sum of lost time (s)	18.0
Intersection Capacity Utilization	66.1%	ICU Level of Service	C
Analysis Period (min)	15		
c Critical Lane Group			

Movement	EBL	EBT	EBR	WBL	WBT	WBR	NBL	NBT	NBR	SBL	SBT	SBR
Lane Configurations												
Volume (vph)	90	7	86	153	4	454	83	2164	158	339	2065	19
Ideal Flow (vphpl)	1900	1900	1900	1900	1900	1900	1900	1900	1900	1900	1900	1900
Total Lost time (s)		6.0		6.0	6.0	6.0	6.0	6.0	6.0	6.0	6.0	6.0
Lane Util. Factor		0.95		1.00	1.00	1.00	1.00	0.91	1.00	1.00	0.91	1.00
Frt		0.93		1.00	1.00	0.85	1.00	1.00	0.85	1.00	1.00	0.85
Flt Protected		0.98		0.95	1.00	1.00	0.95	1.00	1.00	0.95	1.00	1.00
Satd. Flow (prot)		3210		1770	1863	1583	1770	5085	1583	1770	5085	1583
Flt Permitted		0.82		0.37	1.00	1.00	0.06	1.00	1.00	0.05	1.00	1.00
Satd. Flow (perm)		2697		691	1863	1583	112	5085	1583	92	5085	1583
Peak-hour factor, PHF	0.95	0.95	0.95	0.95	0.95	0.95	0.95	0.95	0.95	0.95	0.95	0.95
Adj. Flow (vph)	95	7	91	161	4	478	87	2278	166	357	2174	20
RTOR Reduction (vph)	0	83	0	0	0	206	0	0	51	0	0	6
Lane Group Flow (vph)	0	110	0	161	4	272	87	2278	115	357	2174	14
Turn Type	Perm			pm+pt		Perm	pm+pt		Perm	pm+pt		Perm
Protected Phases		4		3	8		5	2		1	6	
Permitted Phases	4			8		8	2		2	6		6
Actuated Green, G (s)		13.8		29.4	29.4	29.4	82.4	74.6	74.6	108.6	94.8	94.8
Effective Green, g (s)		13.8		29.4	29.4	29.4	82.4	74.6	74.6	108.6	94.8	94.8
Actuated g/C Ratio		0.09		0.20	0.20	0.20	0.55	0.50	0.50	0.72	0.63	0.63
Clearance Time (s)		6.0		6.0	6.0	6.0	6.0	6.0	6.0	6.0	6.0	6.0
Vehicle Extension (s)		3.0		3.0	3.0	3.0	3.0	3.0	3.0	3.0	3.0	3.0
Lane Grp Cap (vph)		248		204	365	310	148	2529	787	380	3214	1000
v/s Ratio Prot				0.05	0.00		0.03	0.45		c0.18	0.43	
v/s Ratio Perm		0.04		0.10		c0.17	0.29		0.07	c0.50		0.01
v/c Ratio		0.45		0.79	0.01	0.88	0.59	0.90	0.15	0.94	0.68	0.01
Uniform Delay, d1		64.5		55.3	48.6	58.6	18.6	34.3	20.4	51.4	17.7	10.2
Progression Factor		1.12		1.00	1.00	1.00	1.05	0.56	0.56	1.70	0.41	0.00
Incremental Delay, d2		1.3		18.1	0.0	23.2	3.9	3.9	0.3	5.0	0.1	0.0
Delay (s)		73.6		73.4	48.6	81.8	23.4	23.2	11.7	92.1	7.4	0.0
Level of Service		E		E	D	F	C	C	B	F	A	A
Approach Delay (s)		73.6			79.5			22.4			19.2	
Approach LOS		E			E			C			B	

Intersection Summary			
HCM Average Control Delay	28.9	HCM Level of Service	C
HCM Volume to Capacity ratio	0.90		
Actuated Cycle Length (s)	150.0	Sum of lost time (s)	12.0
Intersection Capacity Utilization	90.7%	ICU Level of Service	E
Analysis Period (min)	15		
c Critical Lane Group			

Movement	NBL	NBT	NBR2	SBL	SBT	SBR2	NEL	NER2	SWL	SWR2
Lane Configurations										
Volume (vph)	409	274	561	90	211	25	15	320	442	85
Ideal Flow (vphpl)	1900	1900	1900	1900	1900	1900	1900	1900	1900	1900
Total Lost time (s)	6.0	6.0	6.0	6.0	6.0	6.0	6.0	6.0	6.0	6.0
Lane Util. Factor	0.97	0.95	1.00	0.97	0.95	1.00	0.97	1.00	0.97	1.00
Frt	1.00	1.00	0.85	1.00	1.00	0.85	1.00	0.85	1.00	0.85
Flt Protected	0.95	1.00	1.00	0.95	1.00	1.00	0.95	1.00	0.95	1.00
Satd. Flow (prot)	3433	3539	1583	3433	3539	1583	3433	1583	3433	1583
Flt Permitted	0.95	1.00	1.00	0.95	1.00	1.00	0.95	1.00	0.95	1.00
Satd. Flow (perm)	3433	3539	1583	3433	3539	1583	3433	1583	3433	1583
Peak-hour factor, PHF	0.95	0.95	0.95	0.95	0.95	0.95	0.95	0.95	0.95	0.95
Adj. Flow (vph)	431	288	591	95	222	26	16	337	465	89
RTOR Reduction (vph)	0	0	303	0	0	17	0	173	0	57
Lane Group Flow (vph)	431	288	288	95	222	9	16	164	465	32
Turn Type	Prot		Perm	Prot		Perm	Prot	custom	Prot	custom
Protected Phases	5	2		1	6		4		8	
Permitted Phases			2			6		2		6
Actuated Green, G (s)	37.0	73.0	73.0	18.0	54.0	54.0	41.0	73.0	41.0	54.0
Effective Green, g (s)	37.0	73.0	73.0	18.0	54.0	54.0	41.0	73.0	41.0	54.0
Actuated g/C Ratio	0.25	0.49	0.49	0.12	0.36	0.36	0.27	0.49	0.27	0.36
Clearance Time (s)	6.0	6.0	6.0	6.0	6.0	6.0	6.0	6.0	6.0	6.0
Vehicle Extension (s)	3.0	3.0	3.0	3.0	3.0	3.0	3.0	3.0	3.0	3.0
Lane Grp Cap (vph)	847	1722	770	412	1274	570	938	770	938	570
v/s Ratio Prot	c0.13	0.08		0.03	0.06		0.00		c0.14	
v/s Ratio Perm			c0.18			0.01		0.10		0.02
v/c Ratio	0.51	0.17	0.37	0.23	0.17	0.02	0.02	0.21	0.50	0.06
Uniform Delay, d1	48.7	21.5	24.2	59.7	32.8	30.9	39.8	22.0	45.8	31.4
Progression Factor	1.27	0.35	0.50	1.00	1.00	1.00	0.97	0.58	1.00	1.00
Incremental Delay, d2	1.8	0.2	1.1	1.3	0.3	0.1	0.0	0.1	1.9	0.2
Delay (s)	63.7	7.6	13.3	61.0	33.1	31.0	38.7	12.9	47.7	31.5
Level of Service	E	A	B	E	C	C	D	B	D	C
Approach Delay (s)		28.6			40.7					
Approach LOS		C			D					

Intersection Summary			
HCM Average Control Delay	31.8	HCM Level of Service	C
HCM Volume to Capacity ratio	0.44		
Actuated Cycle Length (s)	150.0	Sum of lost time (s)	12.0
Intersection Capacity Utilization	51.6%	ICU Level of Service	A
Analysis Period (min)	15		
c Critical Lane Group			

HCM Signalized Intersection Capacity Analysis
1: Rollins Ave & MD 355

3/31/2014

Movement	EBL	EBT	EBR	WBL	WBT	WBR	NBL	NBT	NBR	SBL	SBT	SBR
Lane Configurations												
Volume (vph)	0	364	81	0	289	137	106	1897	168	172	2146	68
Ideal Flow (vphpl)	1900	1900	1900	1900	1900	1900	1900	1900	1900	1900	1900	1900
Total Lost time (s)		6.0			6.0		6.0	6.0	6.0	6.0	6.0	
Lane Util. Factor		0.95			0.95		1.00	0.91	1.00	1.00	0.91	
Frt		0.97			0.95		1.00	1.00	0.85	1.00	1.00	
Flt Protected		1.00			1.00		0.95	1.00	1.00	0.95	1.00	
Satd. Flow (prot)		3443			3369		1770	5085	1583	1770	5062	
Flt Permitted		1.00			1.00		0.11	1.00	1.00	0.10	1.00	
Satd. Flow (perm)		3443			3369		210	5085	1583	192	5062	
Peak-hour factor, PHF	0.95	0.95	0.95	0.95	0.95	0.95	0.95	0.95	0.95	0.95	0.95	0.95
Adj. Flow (vph)	0	383	85	0	304	144	112	1997	177	181	2259	72
RTOR Reduction (vph)	0	26	0	0	78	0	0	0	65	0	4	0
Lane Group Flow (vph)	0	442	0	0	370	0	112	1997	112	181	2327	0
Turn Type							pm+pt		Perm	pm+pt		
Protected Phases		4			8		5	2		1	6	
Permitted Phases							2		2	6		
Actuated Green, G (s)		14.1			14.1		39.5	35.5	35.5	46.3	38.9	
Effective Green, g (s)		14.1			14.1		39.5	35.5	35.5	46.3	38.9	
Actuated g/C Ratio		0.19			0.19		0.53	0.47	0.47	0.62	0.52	
Clearance Time (s)		6.0			6.0		6.0	6.0	6.0	6.0	6.0	
Vehicle Extension (s)		3.0			3.0		3.0	3.0	3.0	3.0	3.0	
Lane Grp Cap (vph)		647			633		194	2407	749	274	2625	
v/s Ratio Prot		c0.13			0.11		0.03	0.39		c0.07	c0.46	
v/s Ratio Perm							0.27		0.07	0.34		
v/c Ratio		0.68			0.58		0.58	0.83	0.15	0.66	0.89	
Uniform Delay, d1		28.4			27.8		13.4	17.1	11.2	12.3	16.1	
Progression Factor		1.00			1.00		2.73	0.96	1.87	1.00	1.00	
Incremental Delay, d2		3.0			1.4		1.8	1.5	0.2	5.9	4.9	
Delay (s)		31.4			29.2		38.3	18.0	21.1	18.1	21.0	
Level of Service		C			C		D	B	C	B	C	
Approach Delay (s)		31.4			29.2			19.2			20.8	
Approach LOS		C			C			B			C	

Intersection Summary			
HCM Average Control Delay	21.7	HCM Level of Service	C
HCM Volume to Capacity ratio	0.86		
Actuated Cycle Length (s)	75.0	Sum of lost time (s)	18.0
Intersection Capacity Utilization	76.5%	ICU Level of Service	D
Analysis Period (min)	15		
c Critical Lane Group			

Movement	EBL	EBT	EBR	WBL	WBT	WBR	NBL	NBT	NBR	SBL	SBT	SBR
Lane Configurations												
Volume (vph)	44	24	76	529	19	140	91	2189	300	192	2121	12
Ideal Flow (vphpl)	1900	1900	1900	1900	1900	1900	1900	1900	1900	1900	1900	1900
Total Lost time (s)		6.0	6.0	6.0	6.0		6.0	6.0	6.0	6.0	6.0	
Lane Util. Factor		1.00	1.00	0.97	1.00		1.00	0.91	1.00	1.00	0.91	
Frt		1.00	0.85	1.00	0.87		1.00	1.00	0.85	1.00	1.00	
Flt Protected		0.97	1.00	0.95	1.00		0.95	1.00	1.00	0.95	1.00	
Satd. Flow (prot)		1804	1583	3433	1617		1770	5085	1583	1770	5081	
Flt Permitted		0.97	1.00	0.95	1.00		0.95	1.00	1.00	0.05	1.00	
Satd. Flow (perm)		1804	1583	3433	1617		1770	5085	1583	98	5081	
Peak-hour factor, PHF	0.95	0.95	0.95	0.95	0.95	0.95	0.95	0.95	0.95	0.95	0.95	0.95
Adj. Flow (vph)	46	25	80	557	20	147	96	2304	316	202	2233	13
RTOR Reduction (vph)	0	0	74	0	120	0	0	0	98	0	0	0
Lane Group Flow (vph)	0	71	6	557	47	0	96	2304	218	202	2246	0
Turn Type	Split		Perm	Split			Prot		Perm	pm+pt		
Protected Phases	4	4		8	8		5	2		1	6	
Permitted Phases			4						2	6		
Actuated Green, G (s)		11.9	11.9	27.5	27.5		10.7	72.4	72.4	90.1	75.9	
Effective Green, g (s)		11.9	11.9	27.5	27.5		10.7	72.4	72.4	90.1	75.9	
Actuated g/C Ratio		0.08	0.08	0.18	0.18		0.07	0.48	0.48	0.60	0.51	
Clearance Time (s)		6.0	6.0	6.0	6.0		6.0	6.0	6.0	6.0	6.0	
Vehicle Extension (s)		3.0	3.0	3.0	3.0		3.0	3.0	3.0	3.0	3.0	
Lane Grp Cap (vph)		143	126	629	296		126	2454	764	217	2571	
v/s Ratio Prot		c0.04		c0.16	0.03		0.05	0.45		c0.09	0.44	
v/s Ratio Perm			0.00						0.14	c0.47		
v/c Ratio		0.50	0.05	0.89	0.16		0.76	0.94	0.28	0.93	0.87	
Uniform Delay, d1		66.2	63.8	59.7	51.5		68.4	36.7	23.3	49.7	32.8	
Progression Factor		1.00	1.00	1.00	1.00		1.43	0.22	0.03	0.94	0.63	
Incremental Delay, d2		2.7	0.2	14.1	0.3		14.9	5.6	0.6	28.5	2.6	
Delay (s)		68.9	64.0	73.8	51.8		112.5	13.5	1.3	75.1	23.3	
Level of Service		E	E	E	D		F	B	A	E	C	
Approach Delay (s)		66.3			68.7			15.6			27.6	
Approach LOS		E			E			B			C	

Intersection Summary			
HCM Average Control Delay	28.1	HCM Level of Service	C
HCM Volume to Capacity ratio	0.91		
Actuated Cycle Length (s)	150.0	Sum of lost time (s)	24.0
Intersection Capacity Utilization	91.7%	ICU Level of Service	F
Analysis Period (min)	15		
c Critical Lane Group			

Movement	EBL	EBT	EBR	WBL	WBT	WBR	NBL	NBT	NBR	SBL	SBT	SBR
Lane Configurations												
Volume (vph)	33	9	34	260	8	170	52	2398	327	146	2649	19
Ideal Flow (vphpl)	1900	1900	1900	1900	1900	1900	1900	1900	1900	1900	1900	1900
Total Lost time (s)	6.0	6.0		6.0	6.0		6.0	6.0		6.0	6.0	
Lane Util. Factor	1.00	1.00		1.00	1.00		1.00	0.86		1.00	0.91	
Frt	1.00	0.88		1.00	0.86		1.00	0.98		1.00	1.00	
Flt Protected	0.95	1.00		0.95	1.00		0.95	1.00		0.95	1.00	
Satd. Flow (prot)	1770	1639		1770	1595		1770	6293		1770	5080	
Flt Permitted	0.49	1.00		0.73	1.00		0.95	1.00		0.95	1.00	
Satd. Flow (perm)	921	1639		1356	1595		1770	6293		1770	5080	
Peak-hour factor, PHF	0.95	0.95	0.95	0.95	0.95	0.95	0.95	0.95	0.95	0.95	0.95	0.95
Adj. Flow (vph)	35	9	36	274	8	179	55	2524	344	154	2788	20
RTOR Reduction (vph)	0	28	0	0	104	0	0	16	0	0	0	0
Lane Group Flow (vph)	35	17	0	274	83	0	55	2852	0	154	2808	0
Turn Type	Perm			Perm			Prot			Prot		
Protected Phases		4			8		5	2		1	6	
Permitted Phases	4			8								
Actuated Green, G (s)	33.2	33.2		33.2	33.2		6.0	82.9		15.9	92.8	
Effective Green, g (s)	33.2	33.2		33.2	33.2		6.0	82.9		15.9	92.8	
Actuated g/C Ratio	0.22	0.22		0.22	0.22		0.04	0.55		0.11	0.62	
Clearance Time (s)	6.0	6.0		6.0	6.0		6.0	6.0		6.0	6.0	
Vehicle Extension (s)	3.0	3.0		3.0	3.0		3.0	3.0		3.0	3.0	
Lane Grp Cap (vph)	204	363		300	353		71	3478		188	3143	
v/s Ratio Prot		0.01			0.05		0.03	0.45		c0.09	c0.55	
v/s Ratio Perm	0.04			c0.20								
v/c Ratio	0.17	0.05		0.91	0.23		0.77	0.82		0.82	0.89	
Uniform Delay, d1	47.3	45.9		57.0	48.0		71.3	27.4		65.6	24.4	
Progression Factor	1.00	1.00		1.00	1.00		0.94	0.59		1.03	0.43	
Incremental Delay, d2	0.4	0.1		30.4	0.3		34.7	1.9		13.5	2.4	
Delay (s)	47.7	46.0		87.4	48.3		101.6	18.2		80.9	12.8	
Level of Service	D	D		F	D		F	B		F	B	
Approach Delay (s)		46.7			71.5			19.8			16.4	
Approach LOS		D			E			B			B	

Intersection Summary			
HCM Average Control Delay	22.3	HCM Level of Service	C
HCM Volume to Capacity ratio	0.92		
Actuated Cycle Length (s)	150.0	Sum of lost time (s)	18.0
Intersection Capacity Utilization	92.7%	ICU Level of Service	F
Analysis Period (min)	15		
c Critical Lane Group			

Intersection Sign configuration not allowed in HCM analysis.

Movement	EBL	EBT	EBR	WBL	WBT	WBR	NBL	NBT	NBR	SBL	SBT	SBR
Lane Configurations												
Volume (vph)	507	641	0	0	743	236	46	0	354	0	0	0
Ideal Flow (vphpl)	1900	1900	1900	1900	1900	1900	1900	1900	1900	1900	1900	1900
Lane Width	11	11	11	11	11	11	11	11	11	11	11	11
Total Lost time (s)	6.0	6.0			6.0	6.0		6.0	6.0			
Lane Util. Factor	0.97	0.95			0.95	1.00		1.00	0.88			
Frt	1.00	1.00			1.00	0.85		1.00	0.85			
Flt Protected	0.95	1.00			1.00	1.00		0.95	1.00			
Satd. Flow (prot)	3319	3421			3421	1531		1711	2694			
Flt Permitted	0.95	1.00			1.00	1.00		0.95	1.00			
Satd. Flow (perm)	3319	3421			3421	1531		1711	2694			
Peak-hour factor, PHF	0.95	0.95	0.95	0.95	0.95	0.95	0.95	0.95	0.95	0.95	0.95	0.95
Adj. Flow (vph)	534	675	0	0	782	248	48	0	373	0	0	0
RTOR Reduction (vph)	0	0	0	0	0	145	0	0	334	0	0	0
Lane Group Flow (vph)	534	675	0	0	782	103	0	48	39	0	0	0
Turn Type	Prot					Perm	Perm		Perm			
Protected Phases	1	6			2			4				
Permitted Phases						2	4		4			
Actuated Green, G (s)	18.0	55.2			31.2	31.2		7.8	7.8			
Effective Green, g (s)	18.0	55.2			31.2	31.2		7.8	7.8			
Actuated g/C Ratio	0.24	0.74			0.42	0.42		0.10	0.10			
Clearance Time (s)	6.0	6.0			6.0	6.0		6.0	6.0			
Vehicle Extension (s)	3.0	3.0			3.0	3.0		3.0	3.0			
Lane Grp Cap (vph)	797	2518			1423	637		178	280			
v/s Ratio Prot	c0.16	0.20			c0.23							
v/s Ratio Perm						0.07		0.03	0.01			
v/c Ratio	0.67	0.27			0.55	0.16		0.27	0.14			
Uniform Delay, d1	25.8	3.3			16.6	13.7		31.0	30.5			
Progression Factor	0.81	0.55			0.65	1.70		0.82	2.18			
Incremental Delay, d2	1.5	0.2			1.0	0.4		0.6	0.2			
Delay (s)	22.5	2.0			11.8	23.7		26.1	66.9			
Level of Service	C	A			B	C		C	E			
Approach Delay (s)		11.0			14.6			62.2			0.0	
Approach LOS		B			B			E			A	

Intersection Summary			
HCM Average Control Delay	20.5	HCM Level of Service	C
HCM Volume to Capacity ratio	0.55		
Actuated Cycle Length (s)	75.0	Sum of lost time (s)	18.0
Intersection Capacity Utilization	53.3%	ICU Level of Service	A
Analysis Period (min)	15		

c Critical Lane Group

Movement	EBL	EBT	EBR	WBL	WBT	WBR	NBL	NBT	NBR	SBL	SBT	SBR
Lane Configurations												
Volume (vph)	187	134	203	82	204	148	196	1849	26	163	1841	86
Ideal Flow (vphpl)	1900	1900	1900	1900	1900	1900	1900	1900	1900	1900	1900	1900
Total Lost time (s)	6.0	6.0	6.0	6.0	6.0	6.0	6.0	6.0		6.0	6.0	6.0
Lane Util. Factor	*1.00	*1.00	1.00	1.00	1.00	1.00	1.00	0.91		1.00	0.91	1.00
Frt	1.00	1.00	0.85	1.00	1.00	0.85	1.00	1.00		1.00	1.00	0.85
Flt Protected	0.95	0.99	1.00	0.95	1.00	1.00	0.95	1.00		0.95	1.00	1.00
Satd. Flow (prot)	3539	1851	1583	1770	1863	1583	1770	5075		1770	5085	1583
Flt Permitted	0.95	0.99	1.00	0.95	1.00	1.00	0.06	1.00		0.06	1.00	1.00
Satd. Flow (perm)	3539	1851	1583	1770	1863	1583	103	5075		107	5085	1583
Peak-hour factor, PHF	0.95	0.95	0.95	0.95	0.95	0.95	0.95	0.95	0.95	0.95	0.95	0.95
Adj. Flow (vph)	197	141	214	86	215	156	206	1946	27	172	1938	91
RTOR Reduction (vph)	0	0	187	0	0	134	0	1	0	0	0	31
Lane Group Flow (vph)	177	161	27	86	215	22	206	1972	0	172	1938	60
Turn Type	Split		Perm	Split		Perm	pm+pt			pm+pt		Perm
Protected Phases	4	4		8	8		5	2		1	6	
Permitted Phases			4			8	2			6		6
Actuated Green, G (s)	18.7	18.7	18.7	21.3	21.3	21.3	88.4	72.0		83.6	69.6	69.6
Effective Green, g (s)	18.7	18.7	18.7	21.3	21.3	21.3	88.4	72.0		83.6	69.6	69.6
Actuated g/C Ratio	0.12	0.12	0.12	0.14	0.14	0.14	0.59	0.48		0.56	0.46	0.46
Clearance Time (s)	6.0	6.0	6.0	6.0	6.0	6.0	6.0	6.0		6.0	6.0	6.0
Vehicle Extension (s)	3.0	3.0	3.0	3.0	3.0	3.0	3.0	3.0		3.0	3.0	3.0
Lane Grp Cap (vph)	441	231	197	251	265	225	243	2436		215	2359	735
v/s Ratio Prot	0.05	c0.09		0.05	c0.12		c0.09	0.39		0.07	0.38	
v/s Ratio Perm			0.02			0.01	c0.41			0.37		0.04
v/c Ratio	0.40	0.70	0.14	0.34	0.81	0.10	0.85	0.81		0.80	0.82	0.08
Uniform Delay, d1	60.5	62.9	58.5	58.0	62.4	56.0	46.0	33.2		41.9	34.8	22.4
Progression Factor	1.14	1.14	3.79	1.00	1.00	1.00	1.39	1.04		0.75	0.84	0.82
Incremental Delay, d2	0.6	8.5	0.3	0.8	16.9	0.2	19.1	2.4		14.9	2.6	0.2
Delay (s)	69.4	80.1	221.6	58.9	79.3	56.2	83.1	36.8		46.4	32.0	18.5
Level of Service	E	F	F	E	E	E	F	D		D	C	B
Approach Delay (s)		131.5			67.6			41.2			32.6	
Approach LOS		F			E			D			C	

Intersection Summary			
HCM Average Control Delay	49.1	HCM Level of Service	D
HCM Volume to Capacity ratio	0.80		
Actuated Cycle Length (s)	150.0	Sum of lost time (s)	18.0
Intersection Capacity Utilization	84.2%	ICU Level of Service	E
Analysis Period (min)	15		
c Critical Lane Group			

Movement	EBL	EBT	EBR	WBL	WBT	WBR	NBL	NBT	NBR	SBL	SBT	SBR
Lane Configurations												
Volume (vph)	109	42	63	72	30	47	59	2241	90	85	1983	79
Ideal Flow (vphpl)	1900	1900	1900	1900	1900	1900	1900	1900	1900	1900	1900	1900
Total Lost time (s)	6.0	6.0		6.0	6.0	6.0	6.0	6.0	6.0	6.0	6.0	6.0
Lane Util. Factor	1.00	0.95		1.00	0.95	1.00	1.00	0.91	1.00	1.00	0.91	1.00
Frt	1.00	0.91		1.00	1.00	0.85	1.00	1.00	0.85	1.00	1.00	0.85
Flt Protected	0.95	1.00		0.95	1.00	1.00	0.95	1.00	1.00	0.95	1.00	1.00
Satd. Flow (prot)	1770	3221		1770	3539	1583	1770	5085	1583	1770	5085	1583
Flt Permitted	0.55	1.00		0.68	1.00	1.00	0.07	1.00	1.00	0.04	1.00	1.00
Satd. Flow (perm)	1016	3221		1271	3539	1583	123	5085	1583	71	5085	1583
Peak-hour factor, PHF	0.95	0.95	0.95	0.95	0.95	0.95	0.95	0.95	0.95	0.95	0.95	0.95
Adj. Flow (vph)	115	44	66	76	32	49	62	2359	95	89	2087	83
RTOR Reduction (vph)	0	62	0	0	0	47	0	0	32	0	0	25
Lane Group Flow (vph)	115	48	0	76	32	2	62	2359	63	89	2087	58
Turn Type	pm+pt			pm+pt		Perm	pm+pt		Perm	pm+pt		Perm
Protected Phases	7	4		3	8		5	2		1	6	
Permitted Phases	4			8		8	2		2	6		6
Actuated Green, G (s)	18.2	8.9		13.6	6.6	6.6	105.9	100.2	100.2	114.3	104.4	104.4
Effective Green, g (s)	18.2	8.9		13.6	6.6	6.6	105.9	100.2	100.2	114.3	104.4	104.4
Actuated g/C Ratio	0.12	0.06		0.09	0.04	0.04	0.71	0.67	0.67	0.76	0.70	0.70
Clearance Time (s)	6.0	6.0		6.0	6.0	6.0	6.0	6.0	6.0	6.0	6.0	6.0
Vehicle Extension (s)	3.0	3.0		3.0	3.0	3.0	3.0	3.0	3.0	3.0	3.0	3.0
Lane Grp Cap (vph)	170	191		139	156	70	149	3397	1057	166	3539	1102
v/s Ratio Prot	c0.04	0.01		0.03	0.01		0.02	c0.46		c0.04	c0.41	
v/s Ratio Perm	c0.04			0.02		0.00	0.28		0.04	0.37		0.04
v/c Ratio	0.68	0.25		0.55	0.21	0.03	0.42	0.69	0.06	0.54	0.59	0.05
Uniform Delay, d1	61.9	67.4		64.8	69.2	68.6	9.7	15.4	8.6	29.3	11.8	7.2
Progression Factor	1.00	1.00		1.00	1.00	1.00	2.72	0.52	0.00	2.15	0.20	0.08
Incremental Delay, d2	10.2	0.7		4.3	0.7	0.2	0.7	0.5	0.0	2.8	0.6	0.1
Delay (s)	72.1	68.1		69.1	69.8	68.8	27.2	8.5	0.0	65.8	2.9	0.7
Level of Service	E	E		E	E	E	C	A	A	E	A	A
Approach Delay (s)		70.1			69.2			8.6			5.3	
Approach LOS		E			E			A			A	

Intersection Summary			
HCM Average Control Delay	11.7	HCM Level of Service	B
HCM Volume to Capacity ratio	0.70		
Actuated Cycle Length (s)	150.0	Sum of lost time (s)	24.0
Intersection Capacity Utilization	75.7%	ICU Level of Service	D
Analysis Period (min)	15		
c Critical Lane Group			

Movement	EBL	EBT	EBR	WBL	WBT	WBR	NBL	NBT	NBR	SBL	SBT	SBR
Lane Configurations												
Volume (vph)	156	445	108	430	495	297	96	1733	375	293	1679	79
Ideal Flow (vphpl)	1900	1900	1900	1900	1900	1900	1900	1900	1900	1900	1900	1900
Total Lost time (s)		6.0	6.0	6.0	6.0	6.0	6.0	6.0	6.0	6.0	6.0	6.0
Lane Util. Factor		0.95	1.00	0.97	0.95	1.00	1.00	0.91	1.00	1.00	0.91	1.00
Frt		1.00	0.85	1.00	1.00	0.85	1.00	1.00	0.85	1.00	1.00	0.85
Flt Protected		0.99	1.00	0.95	1.00	1.00	0.95	1.00	1.00	0.95	1.00	1.00
Satd. Flow (prot)		3494	1583	3433	3539	1583	1770	5085	1583	1770	5085	1583
Flt Permitted		0.69	1.00	0.21	1.00	1.00	0.95	1.00	1.00	0.07	1.00	1.00
Satd. Flow (perm)		2460	1583	773	3539	1583	1770	5085	1583	138	5085	1583
Peak-hour factor, PHF	0.95	0.95	0.95	0.95	0.95	0.95	0.95	0.95	0.95	0.95	0.95	0.95
Adj. Flow (vph)	164	468	114	453	521	313	101	1824	395	308	1767	83
RTOR Reduction (vph)	0	0	66	0	0	103	0	0	156	0	0	34
Lane Group Flow (vph)	0	632	48	453	521	210	101	1824	239	308	1767	49
Turn Type	Perm		Perm	pm+pt		Perm	Prot		Perm	pm+pt		Perm
Protected Phases		4		3	8		5	2		1	6	
Permitted Phases	4		4	8		8			2	6		6
Actuated Green, G (s)		44.0	44.0	68.0	68.0	68.0	8.0	48.0	48.0	70.0	56.0	56.0
Effective Green, g (s)		44.0	44.0	68.0	68.0	68.0	8.0	48.0	48.0	70.0	56.0	56.0
Actuated g/C Ratio		0.29	0.29	0.45	0.45	0.45	0.05	0.32	0.32	0.47	0.37	0.37
Clearance Time (s)		6.0	6.0	6.0	6.0	6.0	6.0	6.0	6.0	6.0	6.0	6.0
Vehicle Extension (s)		3.0	3.0	3.0	3.0	3.0	3.0	3.0	3.0	3.0	3.0	3.0
Lane Grp Cap (vph)		722	464	670	1604	718	94	1627	507	238	1898	591
v/s Ratio Prot				c0.08	0.15		0.06	0.36		c0.14	0.35	
v/s Ratio Perm		c0.26	0.03	0.23		0.13			0.15	c0.47		0.03
v/c Ratio		0.88	0.10	0.68	0.32	0.29	1.07	1.12	0.47	1.29	0.93	0.08
Uniform Delay, d1		50.4	38.6	28.6	26.3	25.8	71.0	51.0	40.8	69.2	45.1	30.4
Progression Factor		0.57	0.23	1.19	0.88	1.18	1.27	0.85	0.78	1.31	0.39	0.11
Incremental Delay, d2		10.7	0.1	2.5	0.1	0.2	98.4	60.8	2.2	156.1	8.5	0.2
Delay (s)		39.5	9.0	36.7	23.3	30.8	188.6	104.2	33.9	246.8	26.3	3.7
Level of Service		D	A	D	C	C	F	F	C	F	C	A
Approach Delay (s)		34.8			29.8			95.9			56.9	
Approach LOS		C			C			F			E	

Intersection Summary			
HCM Average Control Delay	62.9	HCM Level of Service	E
HCM Volume to Capacity ratio	1.04		
Actuated Cycle Length (s)	150.0	Sum of lost time (s)	18.0
Intersection Capacity Utilization	100.2%	ICU Level of Service	G
Analysis Period (min)	15		
c Critical Lane Group			

Movement	EBL	EBT	EBR	WBL	WBT	WBR	NBL	NBT	NBR	SBL	SBT	SBR
Lane Configurations												
Volume (vph)	27	33	26	50	0	50	95	2207	153	224	2083	24
Ideal Flow (vphpl)	1900	1900	1900	1900	1900	1900	1900	1900	1900	1900	1900	1900
Total Lost time (s)	6.0	6.0		6.0	6.0		6.0	6.0		6.0	6.0	6.0
Lane Util. Factor	1.00	1.00		1.00	1.00		1.00	0.86		1.00	0.91	1.00
Frt	1.00	0.93		1.00	0.85		1.00	0.99		1.00	1.00	0.85
Flt Protected	0.95	1.00		0.95	1.00		0.95	1.00		0.95	1.00	1.00
Satd. Flow (prot)	1770	1741		1770	1583		1770	6346		1770	5085	1583
Flt Permitted	0.72	1.00		0.69	1.00		0.06	1.00		0.95	1.00	1.00
Satd. Flow (perm)	1346	1741		1290	1583		111	6346		1770	5085	1583
Peak-hour factor, PHF	0.95	0.95	0.95	0.95	0.95	0.95	0.95	0.95	0.95	0.95	0.95	0.95
Adj. Flow (vph)	28	35	27	53	0	53	100	2323	161	236	2193	25
RTOR Reduction (vph)	0	20	0	0	49	0	0	6	0	0	0	7
Lane Group Flow (vph)	28	42	0	53	4	0	100	2478	0	236	2193	18
Turn Type	pm+pt			pm+pt			pm+pt			Prot		Perm
Protected Phases	7	4		3	8		5	2		1	6	
Permitted Phases	4			8			2					6
Actuated Green, G (s)	15.8	11.6		16.6	12.0		94.6	84.7		25.1	99.9	99.9
Effective Green, g (s)	15.8	11.6		16.6	12.0		94.6	84.7		25.1	99.9	99.9
Actuated g/C Ratio	0.11	0.08		0.11	0.08		0.63	0.56		0.17	0.67	0.67
Clearance Time (s)	6.0	6.0		6.0	6.0		6.0	6.0		6.0	6.0	6.0
Vehicle Extension (s)	3.0	3.0		3.0	3.0		3.0	3.0		3.0	3.0	3.0
Lane Grp Cap (vph)	154	135		157	127		179	3583		296	3387	1054
v/s Ratio Prot	0.01	0.02		c0.01	0.00		0.04	c0.39		c0.13	0.43	
v/s Ratio Perm	0.01			c0.03			0.32					0.01
v/c Ratio	0.18	0.31		0.34	0.03		0.56	0.69		0.80	0.65	0.02
Uniform Delay, d1	61.0	65.4		61.2	63.7		14.9	23.3		60.0	14.7	8.5
Progression Factor	1.00	1.00		1.00	1.00		1.33	0.33		1.20	0.57	0.93
Incremental Delay, d2	0.6	1.3		1.3	0.1		2.7	0.8		9.6	0.6	0.0
Delay (s)	61.6	66.7		62.4	63.8		22.5	8.5		81.5	9.0	7.9
Level of Service	E	E		E	E		C	A		F	A	A
Approach Delay (s)		65.1			63.1			9.1			15.9	
Approach LOS		E			E			A			B	

Intersection Summary			
HCM Average Control Delay	14.4	HCM Level of Service	B
HCM Volume to Capacity ratio	0.64		
Actuated Cycle Length (s)	150.0	Sum of lost time (s)	18.0
Intersection Capacity Utilization	71.4%	ICU Level of Service	C
Analysis Period (min)	15		
c Critical Lane Group			

Movement	EBL	EBT	EBR	WBL	WBT	WBR	NBL	NBT	NBR	SBL	SBT	SBR
Lane Configurations												
Volume (vph)	85	50	180	253	50	97	70	2230	332	26	2096	45
Ideal Flow (vphpl)	1900	1900	1900	1900	1900	1900	1900	1900	1900	1900	1900	1900
Total Lost time (s)		6.0	6.0	6.0	6.0	6.0	6.0	6.0	6.0	6.0	6.0	
Lane Util. Factor		0.95	1.00	0.95	0.95	1.00	1.00	0.91	1.00	1.00	0.91	
Frt		1.00	0.85	1.00	1.00	0.85	1.00	1.00	0.85	1.00	1.00	
Flt Protected		0.97	1.00	0.95	0.97	1.00	0.95	1.00	1.00	0.95	1.00	
Satd. Flow (prot)		3432	1583	1681	1712	1583	1770	5085	1583	1770	5069	
Flt Permitted		0.97	1.00	0.95	0.97	1.00	0.04	1.00	1.00	0.05	1.00	
Satd. Flow (perm)		3432	1583	1681	1712	1583	82	5085	1583	88	5069	
Peak-hour factor, PHF	0.95	0.95	0.95	0.95	0.95	0.95	0.95	0.95	0.95	0.95	0.95	0.95
Adj. Flow (vph)	89	53	189	266	53	102	74	2347	349	27	2206	47
RTOR Reduction (vph)	0	0	0	0	0	90	0	0	136	0	1	0
Lane Group Flow (vph)	0	142	189	157	162	12	74	2347	213	27	2252	0
Turn Type	Split		pm+ov	Split		Perm	pm+pt		Perm	pm+pt		
Protected Phases	4	4	5	8	8		5	2		1	6	
Permitted Phases			4			8	2		2	6		
Actuated Green, G (s)		12.4	23.1	17.9	17.9	17.9	101.7	91.7	91.7	89.0	85.0	
Effective Green, g (s)		12.4	23.1	17.9	17.9	17.9	101.7	91.7	91.7	89.0	85.0	
Actuated g/C Ratio		0.08	0.15	0.12	0.12	0.12	0.68	0.61	0.61	0.59	0.57	
Clearance Time (s)		6.0	6.0	6.0	6.0	6.0	6.0	6.0	6.0	6.0	6.0	
Vehicle Extension (s)		3.0	3.0	3.0	3.0	3.0	3.0	3.0	3.0	3.0	3.0	
Lane Grp Cap (vph)		284	244	201	204	189	176	3109	968	97	2872	
v/s Ratio Prot		0.04	c0.06	0.09	c0.09		0.03	c0.46		0.01	c0.44	
v/s Ratio Perm			0.06			0.01	0.26		0.13	0.16		
v/c Ratio		0.50	0.77	0.78	0.79	0.06	0.42	0.75	0.22	0.28	0.78	
Uniform Delay, d1		65.8	60.9	64.1	64.3	58.6	23.8	21.0	13.1	19.1	25.3	
Progression Factor		1.16	0.87	1.00	1.00	1.00	2.28	0.14	0.00	1.15	0.57	
Incremental Delay, d2		1.3	13.8	17.7	18.8	0.1	0.7	0.8	0.2	1.2	1.8	
Delay (s)		77.9	66.6	81.8	83.1	58.8	54.9	3.7	0.2	23.2	16.2	
Level of Service		E	E	F	F	E	D	A	A	C	B	
Approach Delay (s)		71.4			76.7			4.6			16.3	
Approach LOS		E			E			A			B	

Intersection Summary			
HCM Average Control Delay	18.2	HCM Level of Service	B
HCM Volume to Capacity ratio	0.83		
Actuated Cycle Length (s)	150.0	Sum of lost time (s)	30.0
Intersection Capacity Utilization	76.4%	ICU Level of Service	D
Analysis Period (min)	15		
c Critical Lane Group			

Movement	EBL	EBT	EBR	WBL	WBT	WBR	NBL	NBT	NBR	SBL	SBT	SBR
Lane Configurations												
Volume (vph)	34	17	83	287	9	297	60	2246	236	283	2173	10
Ideal Flow (vphpl)	1900	1900	1900	1900	1900	1900	1900	1900	1900	1900	1900	1900
Total Lost time (s)		6.0	6.0	6.0	6.0	6.0	6.0	6.0	6.0	6.0	6.0	
Lane Util. Factor		1.00	1.00	0.95	0.95	1.00	1.00	0.91	1.00	1.00	0.91	
Frt		1.00	0.85	1.00	1.00	0.85	1.00	1.00	0.85	1.00	1.00	
Flt Protected		0.97	1.00	0.95	0.95	1.00	0.95	1.00	1.00	0.95	1.00	
Satd. Flow (prot)		1803	1583	1681	1690	1583	1770	5085	1583	1770	5082	
Flt Permitted		0.97	1.00	0.95	0.95	1.00	0.05	1.00	1.00	0.05	1.00	
Satd. Flow (perm)		1803	1583	1681	1690	1583	100	5085	1583	93	5082	
Peak-hour factor, PHF	0.95	0.95	0.95	0.95	0.95	0.95	0.95	0.95	0.95	0.95	0.95	0.95
Adj. Flow (vph)	36	18	87	302	9	313	63	2364	248	298	2287	11
RTOR Reduction (vph)	0	0	80	0	0	227	0	0	125	0	0	0
Lane Group Flow (vph)	0	54	7	154	157	86	63	2364	123	298	2298	0
Turn Type	Split		Perm	Split		Perm	pm+pt		Perm	pm+pt		
Protected Phases	4	4		8	8		5	2		1	6	
Permitted Phases			4			8	2		2	6		
Actuated Green, G (s)		11.3	11.3	17.3	17.3	17.3	80.2	74.2	74.2	103.4	91.4	
Effective Green, g (s)		11.3	11.3	17.3	17.3	17.3	80.2	74.2	74.2	103.4	91.4	
Actuated g/C Ratio		0.08	0.08	0.12	0.12	0.12	0.53	0.49	0.49	0.69	0.61	
Clearance Time (s)		6.0	6.0	6.0	6.0	6.0	6.0	6.0	6.0	6.0	6.0	
Vehicle Extension (s)		3.0	3.0	3.0	3.0	3.0	3.0	3.0	3.0	3.0	3.0	
Lane Grp Cap (vph)		136	119	194	195	183	120	2515	783	323	3097	
v/s Ratio Prot		c0.03		0.09	c0.09		0.02	0.46		c0.14	0.45	
v/s Ratio Perm			0.00			0.05	0.26		0.08	c0.49		
v/c Ratio		0.40	0.06	0.79	0.81	0.47	0.53	0.94	0.16	0.92	0.74	
Uniform Delay, d1		66.1	64.4	64.6	64.7	62.0	21.2	35.8	20.8	52.0	20.9	
Progression Factor		1.00	1.00	1.00	1.00	1.00	1.27	0.66	0.52	0.75	1.37	
Incremental Delay, d2		1.9	0.2	19.6	20.9	1.9	3.1	6.7	0.3	22.1	1.0	
Delay (s)		68.0	64.6	84.2	85.6	63.9	29.9	30.1	11.2	61.1	29.6	
Level of Service		E	E	F	F	E	C	C	B	E	C	
Approach Delay (s)		65.9			74.4			28.4			33.2	
Approach LOS		E			E			C			C	

Intersection Summary			
HCM Average Control Delay	36.1	HCM Level of Service	D
HCM Volume to Capacity ratio	0.84		
Actuated Cycle Length (s)	150.0	Sum of lost time (s)	18.0
Intersection Capacity Utilization	88.9%	ICU Level of Service	E
Analysis Period (min)	15		
c Critical Lane Group			

Movement	EBL	EBT	EBR	WBL	WBT	WBR	NBL	NBT	NBR	SBL	SBT	SBR
Lane Configurations												
Volume (vph)	410	107	126	22	97	114	139	1849	27	127	1608	515
Ideal Flow (vphpl)	1900	1900	1900	1900	1900	1900	1900	1900	1900	1900	1900	1900
Total Lost time (s)	6.0	6.0	6.0	6.0	6.0	6.0	6.0	6.0		6.0	6.0	6.0
Lane Util. Factor	0.91	0.91	1.00	0.91	0.91	1.00	1.00	0.91		1.00	0.91	1.00
Frt	1.00	1.00	0.85	1.00	1.00	0.85	1.00	1.00		1.00	1.00	0.85
Flt Protected	0.95	0.97	1.00	0.95	1.00	1.00	0.95	1.00		0.95	1.00	1.00
Satd. Flow (prot)	1610	3282	1583	1610	3387	1583	1770	5074		1770	5085	1583
Flt Permitted	0.95	0.97	1.00	0.95	1.00	1.00	0.95	1.00		0.06	1.00	1.00
Satd. Flow (perm)	1610	3282	1583	1610	3387	1583	1770	5074		102	5085	1583
Peak-hour factor, PHF	0.95	0.95	0.95	0.95	0.95	0.95	0.95	0.95	0.95	0.95	0.95	0.95
Adj. Flow (vph)	432	113	133	23	102	120	146	1946	28	134	1693	542
RTOR Reduction (vph)	0	0	111	0	0	111	0	1	0	0	0	279
Lane Group Flow (vph)	216	329	22	21	104	9	146	1973	0	134	1693	263
Turn Type	Split		Perm	Split		Perm	Prot			pm+pt		Perm
Protected Phases	4	4		8	8		5	2		1	6	
Permitted Phases			4			8				6		6
Actuated Green, G (s)	24.9	24.9	24.9	11.6	11.6	11.6	16.8	78.1		84.1	72.7	72.7
Effective Green, g (s)	24.9	24.9	24.9	11.6	11.6	11.6	16.8	78.1		84.1	72.7	72.7
Actuated g/C Ratio	0.17	0.17	0.17	0.08	0.08	0.08	0.11	0.52		0.56	0.48	0.48
Clearance Time (s)	6.0	6.0	6.0	6.0	6.0	6.0	6.0	6.0		6.0	6.0	6.0
Vehicle Extension (s)	3.0	3.0	3.0	3.0	3.0	3.0	3.0	3.0		3.0	3.0	3.0
Lane Grp Cap (vph)	267	545	263	125	262	122	198	2642		184	2465	767
v/s Ratio Prot	c0.13	0.10		0.01	c0.03		c0.08	c0.39		0.06	0.33	
v/s Ratio Perm			0.01			0.01				0.35		0.17
v/c Ratio	0.81	0.60	0.08	0.17	0.40	0.08	0.74	0.75		0.73	0.69	0.34
Uniform Delay, d1	60.3	58.0	52.9	64.7	65.9	64.2	64.5	28.2		34.8	29.9	23.9
Progression Factor	1.08	1.09	1.93	1.00	1.00	1.00	1.00	1.00		1.21	0.79	1.23
Incremental Delay, d2	14.1	1.6	0.1	0.6	1.0	0.3	13.3	2.0		9.3	1.1	0.8
Delay (s)	79.2	64.5	102.1	65.3	66.9	64.5	77.8	30.2		51.6	24.8	30.2
Level of Service	E	E	F	E	E	E	E	C		D	C	C
Approach Delay (s)		76.6			65.6			33.5			27.5	
Approach LOS		E			E			C			C	

Intersection Summary			
HCM Average Control Delay	37.7	HCM Level of Service	D
HCM Volume to Capacity ratio	0.75		
Actuated Cycle Length (s)	150.0	Sum of lost time (s)	24.0
Intersection Capacity Utilization	76.4%	ICU Level of Service	D
Analysis Period (min)	15		
c Critical Lane Group			

Movement	EBL	EBT	WBT	WBR	SBL	SBR
Lane Configurations						
Volume (vph)	1109	1169	967	9	0	1119
Ideal Flow (vphpl)	1900	1900	1900	1900	1900	1900
Total Lost time (s)	6.0	4.0	6.0	6.0		4.0
Lane Util. Factor	0.94	0.95	0.95	1.00		1.00
Frt	1.00	1.00	1.00	0.85		0.86
Flt Protected	0.95	1.00	1.00	1.00		1.00
Satd. Flow (prot)	4990	3539	3539	1583		1611
Flt Permitted	0.95	1.00	1.00	1.00		1.00
Satd. Flow (perm)	4990	3539	3539	1583		1611
Peak-hour factor, PHF	0.95	0.95	0.95	0.95	0.95	0.95
Adj. Flow (vph)	1167	1231	1018	9	0	1178
RTOR Reduction (vph)	0	0	0	3	0	0
Lane Group Flow (vph)	1167	1231	1018	6	0	1178
Turn Type	Prot			Perm		Free
Protected Phases	1	Free	2			
Permitted Phases				2		Free
Actuated Green, G (s)	44.2	150.0	93.8	93.8		150.0
Effective Green, g (s)	44.2	150.0	93.8	93.8		150.0
Actuated g/C Ratio	0.29	1.00	0.63	0.63		1.00
Clearance Time (s)	6.0		6.0	6.0		
Vehicle Extension (s)	3.0		3.0	3.0		
Lane Grp Cap (vph)	1470	3539	2213	990		1611
v/s Ratio Prot	0.23	0.35	0.29			
v/s Ratio Perm				0.00		c0.73
v/c Ratio	0.79	0.35	0.46	0.01		0.73
Uniform Delay, d1	48.7	0.0	14.8	10.6		0.0
Progression Factor	1.00	1.00	1.27	1.64		1.00
Incremental Delay, d2	3.0	0.3	0.5	0.0		2.8
Delay (s)	51.7	0.3	19.3	17.4		2.8
Level of Service	D	A	B	B		A
Approach Delay (s)		25.3	19.2		2.8	
Approach LOS		C	B		A	

Intersection Summary			
HCM Average Control Delay	18.2	HCM Level of Service	B
HCM Volume to Capacity ratio	0.73		
Actuated Cycle Length (s)	150.0	Sum of lost time (s)	0.0
Intersection Capacity Utilization	57.8%	ICU Level of Service	B
Analysis Period (min)	15		
c Critical Lane Group			

Movement	EBL	EBT	EBR	WBL	WBT	WBR	NBL	NBT	NBR	SBL	SBT	SBR
Lane Configurations												
Volume (vph)	565	227	58	53	364	72	63	350	47	60	269	598
Ideal Flow (vphpl)	1900	1900	1900	1900	1900	1900	1900	1900	1900	1900	1900	1900
Total Lost time (s)	6.0	6.0	4.0	6.0	6.0		6.0	6.0		6.0	6.0	6.0
Lane Util. Factor	0.97	0.95	1.00	1.00	0.95		1.00	0.95		1.00	0.95	0.88
Frt	1.00	1.00	0.85	1.00	0.98		1.00	0.98		1.00	1.00	0.85
Flt Protected	0.95	1.00	1.00	0.95	1.00		0.95	1.00		0.95	1.00	1.00
Satd. Flow (prot)	3433	3539	1583	1770	3451		1770	3477		1770	3539	2787
Flt Permitted	0.95	1.00	1.00	0.95	1.00		0.95	1.00		0.95	1.00	1.00
Satd. Flow (perm)	3433	3539	1583	1770	3451		1770	3477		1770	3539	2787
Peak-hour factor, PHF	0.95	0.95	0.95	0.95	0.95	0.95	0.95	0.95	0.95	0.95	0.95	0.95
Adj. Flow (vph)	595	239	61	56	383	76	66	368	49	63	283	629
RTOR Reduction (vph)	0	0	0	0	9	0	0	8	0	0	0	382
Lane Group Flow (vph)	595	239	61	56	450	0	66	409	0	63	283	247
Turn Type	Prot		Free	Prot			Split			Split		pt+ov
Protected Phases	1	6		5	2		4	4		8	8	8 1
Permitted Phases			Free									
Actuated Green, G (s)	34.2	75.9	150.0	8.5	50.2		22.8	22.8		18.8	18.8	59.0
Effective Green, g (s)	34.2	75.9	150.0	8.5	50.2		22.8	22.8		18.8	18.8	59.0
Actuated g/C Ratio	0.23	0.51	1.00	0.06	0.33		0.15	0.15		0.13	0.13	0.39
Clearance Time (s)	6.0	6.0		6.0	6.0		6.0	6.0		6.0	6.0	
Vehicle Extension (s)	3.0	3.0		3.0	3.0		3.0	3.0		3.0	3.0	
Lane Grp Cap (vph)	783	1791	1583	100	1155		269	529		222	444	1096
v/s Ratio Prot	c0.17	0.07		0.03	c0.13		0.04	c0.12		0.04	c0.08	0.09
v/s Ratio Perm			0.04									
v/c Ratio	0.76	0.13	0.04	0.56	0.39		0.25	0.77		0.28	0.64	0.23
Uniform Delay, d1	54.1	19.6	0.0	68.9	38.2		56.0	61.1		59.5	62.4	30.3
Progression Factor	1.90	0.16	1.00	1.19	0.64		0.62	0.62		1.00	1.00	1.00
Incremental Delay, d2	3.6	0.1	0.0	6.7	0.9		0.5	6.7		0.7	3.0	0.1
Delay (s)	106.3	3.2	0.0	88.7	25.3		35.2	44.8		60.2	65.4	30.4
Level of Service	F	A	A	F	C		D	D		E	E	C
Approach Delay (s)		71.5			32.2			43.5			42.5	
Approach LOS		E			C			D			D	

Intersection Summary			
HCM Average Control Delay	49.9	HCM Level of Service	D
HCM Volume to Capacity ratio	0.60		
Actuated Cycle Length (s)	150.0	Sum of lost time (s)	24.0
Intersection Capacity Utilization	63.0%	ICU Level of Service	B
Analysis Period (min)	15		
c Critical Lane Group			

Intersection Sign configuration not allowed in HCM analysis.

Movement	EBL	EBT	EBR	WBL	WBT	WBR	NBL	NBT	NBR	SBL	SBT	SBR
Lane Configurations												
Volume (vph)	86	52	156	42	9	42	86	131	31	17	567	296
Ideal Flow (vphpl)	1900	1900	1900	1900	1900	1900	1900	1900	1900	1900	1900	1900
Total Lost time (s)		6.0	6.0	6.0	6.0		6.0	6.0			6.0	
Lane Util. Factor		1.00	0.88	1.00	1.00		0.97	0.95			0.95	
Frt		1.00	0.85	1.00	0.88		1.00	0.97			0.95	
Flt Protected		0.97	1.00	0.95	1.00		0.95	1.00			1.00	
Satd. Flow (prot)		1806	2787	1770	1631		3433	3437			3357	
Flt Permitted		0.97	1.00	0.66	1.00		0.95	1.00			0.95	
Satd. Flow (perm)		1806	2787	1237	1631		3433	3437			3182	
Peak-hour factor, PHF	0.95	0.95	0.95	0.95	0.95	0.95	0.95	0.95	0.95	0.95	0.95	0.95
Adj. Flow (vph)	91	55	164	44	9	44	91	138	33	18	597	312
RTOR Reduction (vph)	0	0	145	0	41	0	0	10	0	0	33	0
Lane Group Flow (vph)	0	146	19	44	12	0	91	161	0	0	894	0
Turn Type	Split		Perm	Perm			Prot			Perm		
Protected Phases	4	4			8		5	2			6	
Permitted Phases			4	8						6		
Actuated Green, G (s)		17.4	17.4	10.3	10.3		9.3	104.3			89.0	
Effective Green, g (s)		17.4	17.4	10.3	10.3		9.3	104.3			89.0	
Actuated g/C Ratio		0.12	0.12	0.07	0.07		0.06	0.70			0.59	
Clearance Time (s)		6.0	6.0	6.0	6.0		6.0	6.0			6.0	
Vehicle Extension (s)		3.0	3.0	3.0	3.0		3.0	3.0			3.0	
Lane Grp Cap (vph)		209	323	85	112		213	2390			1888	
v/s Ratio Prot		c0.08			0.01		c0.03	0.05				
v/s Ratio Perm			0.01	c0.04							c0.28	
v/c Ratio		0.70	0.06	0.52	0.11		0.43	0.07			0.47	
Uniform Delay, d1		63.8	59.0	67.5	65.5		67.8	7.3			17.3	
Progression Factor		1.41	4.53	1.00	1.00		0.67	1.03			0.70	
Incremental Delay, d2		9.6	0.1	5.2	0.4		1.4	0.1			0.4	
Delay (s)		99.6	267.3	72.7	66.0		47.0	7.6			12.5	
Level of Service		F	F	E	E		D	A			B	
Approach Delay (s)		188.3			69.0			21.3			12.5	
Approach LOS		F			E			C			B	

Intersection Summary			
HCM Average Control Delay	51.5	HCM Level of Service	D
HCM Volume to Capacity ratio	0.50		
Actuated Cycle Length (s)	150.0	Sum of lost time (s)	24.0
Intersection Capacity Utilization	59.4%	ICU Level of Service	B
Analysis Period (min)	15		
c Critical Lane Group			

Movement	EBL	EBT	EBR	WBL	WBT	WBR	NBL	NBT	NBR	SBL	SBT	SBR
Lane Configurations												
Volume (vph)	114	800	199	35	520	48	298	302	12	35	339	24
Ideal Flow (vphpl)	1900	1900	1900	1900	1900	1900	1900	1900	1900	1900	1900	1900
Total Lost time (s)	6.0	6.0	6.0	6.0	6.0		6.0	6.0		6.0	6.0	6.0
Lane Util. Factor	1.00	0.95	1.00	1.00	0.95		0.97	0.95		1.00	1.00	1.00
Frt	1.00	1.00	0.85	1.00	0.99		1.00	0.99		1.00	1.00	0.85
Flt Protected	0.95	1.00	1.00	0.95	1.00		0.95	1.00		0.95	1.00	1.00
Satd. Flow (prot)	1770	3539	1583	1770	3494		3433	3518		1770	1863	1583
Flt Permitted	0.26	1.00	1.00	0.21	1.00		0.95	1.00		0.95	1.00	1.00
Satd. Flow (perm)	487	3539	1583	392	3494		3433	3518		1770	1863	1583
Peak-hour factor, PHF	0.95	0.95	0.95	0.95	0.95	0.95	0.95	0.95	0.95	0.95	0.95	0.95
Adj. Flow (vph)	120	842	209	37	547	51	314	318	13	37	357	25
RTOR Reduction (vph)	0	0	149	0	9	0	0	3	0	0	0	19
Lane Group Flow (vph)	120	842	60	37	589	0	314	328	0	37	357	6
Turn Type	pm+pt		Perm	pm+pt			Prot			Prot		Perm
Protected Phases	7	4		3	8		5	2		1	6	
Permitted Phases	4		4	8								6
Actuated Green, G (s)	26.2	21.4	21.4	21.4	19.0		8.8	24.2		3.0	18.4	18.4
Effective Green, g (s)	26.2	21.4	21.4	21.4	19.0		8.8	24.2		3.0	18.4	18.4
Actuated g/C Ratio	0.35	0.29	0.29	0.29	0.25		0.12	0.32		0.04	0.25	0.25
Clearance Time (s)	6.0	6.0	6.0	6.0	6.0		6.0	6.0		6.0	6.0	6.0
Vehicle Extension (s)	3.0	3.0	3.0	3.0	3.0		3.0	3.0		3.0	3.0	3.0
Lane Grp Cap (vph)	252	1010	452	156	885		403	1135		71	457	388
v/s Ratio Prot	c0.03	c0.24		0.01	0.17		c0.09	c0.09		0.02	c0.19	
v/s Ratio Perm	0.14		0.04	0.06								0.00
v/c Ratio	0.48	0.83	0.13	0.24	0.67		0.78	0.29		0.52	0.78	0.02
Uniform Delay, d1	17.6	25.1	19.9	20.1	25.1		32.2	19.0		35.3	26.4	21.4
Progression Factor	1.00	1.00	1.00	1.08	1.23		1.45	1.28		0.65	1.48	1.47
Incremental Delay, d2	1.4	5.8	0.1	0.7	1.7		9.1	0.6		6.2	11.6	0.1
Delay (s)	18.9	30.9	20.0	22.5	32.8		55.7	24.8		29.3	50.7	31.6
Level of Service	B	C	C	C	C		E	C		C	D	C
Approach Delay (s)		27.7			32.2			39.9			47.7	
Approach LOS		C			C			D			D	

Intersection Summary			
HCM Average Control Delay	34.3	HCM Level of Service	C
HCM Volume to Capacity ratio	0.79		
Actuated Cycle Length (s)	75.0	Sum of lost time (s)	24.0
Intersection Capacity Utilization	71.8%	ICU Level of Service	C
Analysis Period (min)	15		
c Critical Lane Group			

Movement	EBL	EBT	EBR	WBL	WBT	WBR	NBL	NBT	NBR	SBL	SBT	SBR
Lane Configurations												
Volume (vph)	33	561	248	135	400	219	193	23	396	213	474	27
Ideal Flow (vphpl)	1900	1900	1900	1900	1900	1900	1900	1900	1900	1900	1900	1900
Lane Width	11	11	11	11	11	11	11	11	11	11	11	11
Total Lost time (s)	6.0	6.0		6.0	6.0	6.0	6.0	6.0		6.0	6.0	
Lane Util. Factor	1.00	0.95		1.00	0.95	0.88	1.00	1.00		0.97	1.00	
Frt	1.00	0.95		1.00	1.00	0.85	1.00	0.86		1.00	0.99	
Flt Protected	0.95	1.00		0.95	1.00	1.00	0.95	1.00		0.95	1.00	
Satd. Flow (prot)	1711	3264		1711	3421	2694	1711	1545		3319	1786	
Flt Permitted	0.47	1.00		0.12	1.00	1.00	0.95	1.00		0.95	1.00	
Satd. Flow (perm)	847	3264		207	3421	2694	1711	1545		3319	1786	
Peak-hour factor, PHF	0.95	0.95	0.95	0.95	0.95	0.95	0.95	0.95	0.95	0.95	0.95	0.95
Adj. Flow (vph)	35	591	261	142	421	231	203	24	417	224	499	28
RTOR Reduction (vph)	0	33	0	0	0	0	0	273	0	0	1	0
Lane Group Flow (vph)	35	819	0	142	421	231	203	168	0	224	526	0
Turn Type	pm+pt			pm+pt		pt+ov	Split			Split		
Protected Phases	1	6		5	2	2 8	4	4		8	8	
Permitted Phases	6			2								
Actuated Green, G (s)	51.6	46.1		61.0	50.8	98.1	22.4	22.4		47.3	47.3	
Effective Green, g (s)	51.6	46.1		61.0	50.8	98.1	22.4	22.4		47.3	47.3	
Actuated g/C Ratio	0.34	0.31		0.41	0.34	0.65	0.15	0.15		0.32	0.32	
Clearance Time (s)	6.0	6.0		6.0	6.0		6.0	6.0		6.0	6.0	
Vehicle Extension (s)	3.0	3.0		3.0	3.0		3.0	3.0		3.0	3.0	
Lane Grp Cap (vph)	323	1003		186	1159	1762	256	231		1047	563	
v/s Ratio Prot	0.00	c0.25		c0.05	0.12	0.09	c0.12	0.11		0.07	c0.29	
v/s Ratio Perm	0.03			0.26								
v/c Ratio	0.11	0.82		0.76	0.36	0.13	0.79	0.73		0.21	0.93	
Uniform Delay, d1	33.0	48.0		33.6	37.4	9.8	61.6	60.9		37.7	49.8	
Progression Factor	0.57	0.59		1.98	0.37	0.17	0.90	2.48		0.50	0.56	
Incremental Delay, d2	0.1	4.4		14.7	0.8	0.0	15.2	10.7		0.1	21.5	
Delay (s)	18.9	32.9		81.3	14.7	1.7	70.8	161.7		18.8	49.3	
Level of Service	B	C		F	B	A	E	F		B	D	
Approach Delay (s)		32.4			22.8			133.0			40.2	
Approach LOS		C			C			F			D	

Intersection Summary			
HCM Average Control Delay	52.9	HCM Level of Service	D
HCM Volume to Capacity ratio	0.90		
Actuated Cycle Length (s)	150.0	Sum of lost time (s)	30.0
Intersection Capacity Utilization	88.2%	ICU Level of Service	E
Analysis Period (min)	15		

c Critical Lane Group

Movement	EBL	EBT	EBR	WBL	WBT	WBR	NBL	NBT	NBR	SBL	SBT	SBR
Lane Configurations												
Volume (vph)	170	814	59	26	1004	157	21	7	23	233	3	89
Ideal Flow (vphpl)	1900	1900	1900	1900	1900	1900	1900	1900	1900	1900	1900	1900
Total Lost time (s)	6.0	6.0		6.0	6.0	6.0	6.0	6.0		6.0	6.0	
Lane Util. Factor	1.00	0.95		1.00	0.95	1.00	1.00	1.00		0.95	0.95	
Frt	1.00	0.99		1.00	1.00	0.85	1.00	0.88		1.00	0.92	
Flt Protected	0.95	1.00		0.95	1.00	1.00	0.95	1.00		0.95	0.98	
Satd. Flow (prot)	1770	3503		1770	3539	1583	1770	1646		1681	1586	
Flt Permitted	0.07	1.00		0.31	1.00	1.00	0.95	1.00		0.95	0.98	
Satd. Flow (perm)	130	3503		579	3539	1583	1770	1646		1681	1586	
Peak-hour factor, PHF	0.95	0.95	0.95	0.95	0.95	0.95	0.95	0.95	0.95	0.95	0.95	0.95
Adj. Flow (vph)	179	857	62	27	1057	165	22	7	24	245	3	94
RTOR Reduction (vph)	0	4	0	0	0	85	0	19	0	0	31	0
Lane Group Flow (vph)	179	915	0	27	1057	80	22	12	0	176	135	0
Turn Type	pm+pt			Perm		Perm	Split			Split		
Protected Phases	7	4			8		2	2		6	6	
Permitted Phases	4			8		8						
Actuated Green, G (s)	76.1	76.1		52.7	52.7	52.7	28.9	28.9		27.0	27.0	
Effective Green, g (s)	76.1	76.1		52.7	52.7	52.7	28.9	28.9		27.0	27.0	
Actuated g/C Ratio	0.51	0.51		0.35	0.35	0.35	0.19	0.19		0.18	0.18	
Clearance Time (s)	6.0	6.0		6.0	6.0	6.0	6.0	6.0		6.0	6.0	
Vehicle Extension (s)	3.0	3.0		3.0	3.0	3.0	3.0	3.0		3.0	3.0	
Lane Grp Cap (vph)	256	1777		203	1243	556	341	317		303	285	
v/s Ratio Prot	c0.08	0.26			c0.30		c0.01	0.01		c0.10	0.09	
v/s Ratio Perm	0.27			0.05		0.05						
v/c Ratio	0.70	0.51		0.13	0.85	0.14	0.06	0.04		0.58	0.47	
Uniform Delay, d1	38.4	24.6		33.1	45.0	33.2	49.5	49.2		56.3	55.1	
Progression Factor	0.96	1.45		0.76	0.84	0.33	1.00	1.00		1.00	1.00	
Incremental Delay, d2	7.7	0.2		0.3	5.7	0.1	0.4	0.2		7.9	5.5	
Delay (s)	44.7	35.9		25.3	43.4	11.1	49.9	49.4		64.2	60.7	
Level of Service	D	D		C	D	B	D	D		E	E	
Approach Delay (s)		37.4			38.7			49.6			62.5	
Approach LOS		D			D			D			E	

Intersection Summary			
HCM Average Control Delay	41.3	HCM Level of Service	D
HCM Volume to Capacity ratio	0.59		
Actuated Cycle Length (s)	150.0	Sum of lost time (s)	24.0
Intersection Capacity Utilization	68.1%	ICU Level of Service	C
Analysis Period (min)	15		
c Critical Lane Group			

Movement	WBL	WBR	NBT	NBR	SBL	SBT
Lane Configurations						
Volume (vph)	364	101	97	317	147	43
Ideal Flow (vphpl)	1900	1900	1900	1900	1900	1900
Total Lost time (s)	6.0	6.0	6.0	6.0	6.0	6.0
Lane Util. Factor	1.00	1.00	1.00	1.00	1.00	1.00
Frt	1.00	0.85	1.00	0.85	1.00	1.00
Flt Protected	0.95	1.00	1.00	1.00	0.95	1.00
Satd. Flow (prot)	1770	1583	1863	1583	1770	1863
Flt Permitted	0.95	1.00	1.00	1.00	0.69	1.00
Satd. Flow (perm)	1770	1583	1863	1583	1287	1863
Peak-hour factor, PHF	0.95	0.95	0.95	0.95	0.95	0.95
Adj. Flow (vph)	383	106	102	334	155	45
RTOR Reduction (vph)	0	75	0	151	0	0
Lane Group Flow (vph)	383	31	102	183	155	45
Turn Type		Perm		Perm	Perm	
Protected Phases	8		2			6
Permitted Phases		8		2	6	
Actuated Green, G (s)	22.0	22.0	41.0	41.0	41.0	41.0
Effective Green, g (s)	22.0	22.0	41.0	41.0	41.0	41.0
Actuated g/C Ratio	0.29	0.29	0.55	0.55	0.55	0.55
Clearance Time (s)	6.0	6.0	6.0	6.0	6.0	6.0
Vehicle Extension (s)	3.0	3.0	3.0	3.0	3.0	3.0
Lane Grp Cap (vph)	519	464	1018	865	704	1018
v/s Ratio Prot	c0.22		0.05			0.02
v/s Ratio Perm		0.02		0.12	c0.12	
v/c Ratio	0.74	0.07	0.10	0.21	0.22	0.04
Uniform Delay, d1	23.9	19.1	8.2	8.7	8.8	7.9
Progression Factor	0.69	1.32	1.00	1.00	1.00	1.00
Incremental Delay, d2	3.9	0.0	0.2	0.6	0.7	0.1
Delay (s)	20.3	25.3	8.4	9.3	9.5	8.0
Level of Service	C	C	A	A	A	A
Approach Delay (s)	21.4		9.1			9.1
Approach LOS	C		A			A

Intersection Summary			
HCM Average Control Delay	14.4	HCM Level of Service	B
HCM Volume to Capacity ratio	0.40		
Actuated Cycle Length (s)	75.0	Sum of lost time (s)	12.0
Intersection Capacity Utilization	45.0%	ICU Level of Service	A
Analysis Period (min)	15		
c Critical Lane Group			

Movement	EBL	EBT	EBR	WBL	WBT	WBR	NBL	NBT	NBR	SBL	SBT	SBR
Lane Configurations												
Volume (vph)	161	257	30	0	109	81	19	426	0	76	808	337
Ideal Flow (vphpl)	1900	1900	1900	1900	1900	1900	1900	1900	1900	1900	1900	1900
Total Lost time (s)	6.0	6.0	6.0		6.0	6.0		6.0		6.0	6.0	
Lane Util. Factor	1.00	0.95	1.00		0.95	1.00		0.95		0.91	0.91	
Frt	1.00	1.00	0.85		1.00	0.85		1.00		1.00	0.96	
Flt Protected	0.95	1.00	1.00		1.00	1.00		1.00		0.95	1.00	
Satd. Flow (prot)	1770	3539	1583		3539	1583		3532		1610	3240	
Flt Permitted	0.45	1.00	1.00		1.00	1.00		1.00		0.95	1.00	
Satd. Flow (perm)	839	3539	1583		3539	1583		3532		1610	3240	
Peak-hour factor, PHF	0.95	0.95	0.95	0.95	0.95	0.95	0.95	0.95	0.95	0.95	0.95	0.95
Adj. Flow (vph)	169	271	32	0	115	85	20	448	0	80	851	355
RTOR Reduction (vph)	0	0	25	0	0	78	0	0	0	0	27	0
Lane Group Flow (vph)	169	271	7	0	115	7	0	468	0	72	1187	0
Turn Type	pm+pt		Perm			Perm	Split			Split		
Protected Phases	7	4			8		2	2		6	6	
Permitted Phases	4		4			8						
Actuated Green, G (s)	32.3	32.3	32.3		11.8	11.8		33.7		66.0	66.0	
Effective Green, g (s)	32.3	32.3	32.3		11.8	11.8		33.7		66.0	66.0	
Actuated g/C Ratio	0.22	0.22	0.22		0.08	0.08		0.22		0.44	0.44	
Clearance Time (s)	6.0	6.0	6.0		6.0	6.0		6.0		6.0	6.0	
Vehicle Extension (s)	3.0	3.0	3.0		3.0	3.0		3.0		3.0	3.0	
Lane Grp Cap (vph)	271	762	341		278	125		794		708	1426	
v/s Ratio Prot	c0.06	0.08			0.03			c0.13		0.04	c0.37	
v/s Ratio Perm	c0.07		0.00			0.00						
v/c Ratio	0.62	0.36	0.02		0.41	0.05		0.59		0.10	0.83	
Uniform Delay, d1	51.2	50.0	46.4		65.8	63.9		52.0		24.6	37.1	
Progression Factor	0.91	0.92	0.83		0.71	0.23		1.35		0.46	0.45	
Incremental Delay, d2	4.3	0.3	0.0		1.0	0.2		2.7		0.3	5.4	
Delay (s)	51.1	46.3	38.5		47.8	15.1		72.7		11.5	22.1	
Level of Service	D	D	D		D	B		E		B	C	
Approach Delay (s)		47.5			33.9			72.7			21.5	
Approach LOS		D			C			E			C	

Intersection Summary			
HCM Average Control Delay	37.4	HCM Level of Service	D
HCM Volume to Capacity ratio	0.71		
Actuated Cycle Length (s)	150.0	Sum of lost time (s)	18.0
Intersection Capacity Utilization	66.5%	ICU Level of Service	C
Analysis Period (min)	15		
c Critical Lane Group			

Movement	EBL	EBT	EBR	WBL	WBT	WBR	NBL	NBT	NBR	SBL	SBT	SBR
Lane Configurations												
Volume (vph)	12	338	166	72	287	12	116	0	72	1	1	19
Ideal Flow (vphpl)	1900	1900	1900	1900	1900	1900	1900	1900	1900	1900	1900	1900
Total Lost time (s)	6.0	6.0		6.0	6.0		6.0	6.0			6.0	
Lane Util. Factor	1.00	0.95		1.00	0.95		1.00	1.00			1.00	
Frt	1.00	0.95		1.00	0.99		1.00	0.85			0.88	
Flt Protected	0.95	1.00		0.95	1.00		0.95	1.00			1.00	
Satd. Flow (prot)	1770	3364		1770	3517		1770	1583			1630	
Flt Permitted	0.56	1.00		0.15	1.00		0.74	1.00			1.00	
Satd. Flow (perm)	1044	3364		276	3517		1384	1583			1628	
Peak-hour factor, PHF	0.95	0.95	0.95	0.95	0.95	0.95	0.95	0.95	0.95	0.95	0.95	0.95
Adj. Flow (vph)	13	356	175	76	302	13	122	0	76	1	1	20
RTOR Reduction (vph)	0	57	0	0	4	0	0	28	0	0	7	0
Lane Group Flow (vph)	13	474	0	76	311	0	122	48	0	0	15	0
Turn Type	Perm			pm+pt			Perm			Perm		
Protected Phases		4		3	8			2			6	
Permitted Phases	4			8			2			6		
Actuated Green, G (s)	27.4	27.4		43.9	43.9		94.1	94.1			94.1	
Effective Green, g (s)	27.4	27.4		43.9	43.9		94.1	94.1			94.1	
Actuated g/C Ratio	0.18	0.18		0.29	0.29		0.63	0.63			0.63	
Clearance Time (s)	6.0	6.0		6.0	6.0		6.0	6.0			6.0	
Vehicle Extension (s)	3.0	3.0		3.0	3.0		3.0	3.0			3.0	
Lane Grp Cap (vph)	191	614		185	1029		868	993			1021	
v/s Ratio Prot		c0.14		c0.03	0.09			0.03				
v/s Ratio Perm	0.01			0.09			c0.09				0.01	
v/c Ratio	0.07	0.77		0.41	0.30		0.14	0.05			0.01	
Uniform Delay, d1	50.7	58.3		41.1	41.2		11.4	10.7			10.5	
Progression Factor	0.33	0.42		1.00	1.00		1.00	1.00			1.00	
Incremental Delay, d2	0.2	5.9		1.5	0.2		0.3	0.1			0.0	
Delay (s)	17.0	30.7		42.6	41.3		11.8	10.8			10.5	
Level of Service	B	C		D	D		B	B			B	
Approach Delay (s)		30.4			41.6			11.4			10.5	
Approach LOS		C			D			B			B	

Intersection Summary			
HCM Average Control Delay	30.5	HCM Level of Service	C
HCM Volume to Capacity ratio	0.29		
Actuated Cycle Length (s)	150.0	Sum of lost time (s)	18.0
Intersection Capacity Utilization	46.7%	ICU Level of Service	A
Analysis Period (min)	15		
c Critical Lane Group			

Movement	EBL	EBT	EBR	WBL	WBT	WBR	NBL	NBT	NBR	SBL	SBT	SBR
Lane Configurations												
Volume (vph)	6	369	176	421	347	1	147	508	359	11	619	1
Ideal Flow (vphpl)	1900	1900	1900	1900	1900	1900	1900	1900	1900	1900	1900	1900
Total Lost time (s)	6.0	6.0	6.0	6.0	6.0		6.0	6.0	6.0	6.0	6.0	
Lane Util. Factor	1.00	0.95	1.00	0.97	0.95		0.97	0.95	1.00	1.00	0.95	
Frt	1.00	1.00	0.85	1.00	1.00		1.00	1.00	0.85	1.00	1.00	
Flt Protected	0.95	1.00	1.00	0.95	1.00		0.95	1.00	1.00	0.95	1.00	
Satd. Flow (prot)	1770	3539	1583	3433	3538		3433	3539	1583	1770	3538	
Flt Permitted	0.95	1.00	1.00	0.95	1.00		0.95	1.00	1.00	0.95	1.00	
Satd. Flow (perm)	1770	3539	1583	3433	3538		3433	3539	1583	1770	3538	
Peak-hour factor, PHF	0.95	0.95	0.95	0.95	0.95	0.95	0.95	0.95	0.95	0.95	0.95	0.95
Adj. Flow (vph)	6	388	185	443	365	1	155	535	378	12	652	1
RTOR Reduction (vph)	0	0	108	0	0	0	0	0	305	0	0	0
Lane Group Flow (vph)	6	388	77	443	366	0	155	535	73	12	653	0
Turn Type	Prot		Perm	Prot			Split		Perm	Split		
Protected Phases	7	4		3	8		1	1		2	2	
Permitted Phases			4						1			
Actuated Green, G (s)	1.4	26.2	26.2	24.1	48.9		29.1	29.1	29.1	46.6	46.6	
Effective Green, g (s)	1.4	26.2	26.2	24.1	48.9		29.1	29.1	29.1	46.6	46.6	
Actuated g/C Ratio	0.01	0.17	0.17	0.16	0.33		0.19	0.19	0.19	0.31	0.31	
Clearance Time (s)	6.0	6.0	6.0	6.0	6.0		6.0	6.0	6.0	6.0	6.0	
Vehicle Extension (s)	3.0	3.0	3.0	3.0	3.0		3.0	3.0	3.0	3.0	3.0	
Lane Grp Cap (vph)	17	618	276	552	1153		666	687	307	550	1099	
v/s Ratio Prot	0.00	c0.11		c0.13	0.10		0.05	c0.15		0.01	c0.18	
v/s Ratio Perm			0.05						0.05			
v/c Ratio	0.35	0.63	0.28	0.80	0.32		0.23	0.78	0.24	0.02	0.59	
Uniform Delay, d1	73.8	57.4	53.7	60.7	38.0		51.0	57.4	51.1	35.9	43.7	
Progression Factor	1.11	0.98	1.36	0.90	1.22		0.53	0.58	2.07	0.74	0.81	
Incremental Delay, d2	10.4	1.7	0.5	7.9	0.2		0.1	4.6	0.3	0.1	2.3	
Delay (s)	92.5	58.2	73.7	62.3	46.7		27.4	37.8	106.1	26.6	37.8	
Level of Service	F	E	E	E	D		C	D	F	C	D	
Approach Delay (s)		63.5			55.2			60.5			37.6	
Approach LOS		E			E			E			D	

Intersection Summary			
HCM Average Control Delay	54.8	HCM Level of Service	D
HCM Volume to Capacity ratio	0.68		
Actuated Cycle Length (s)	150.0	Sum of lost time (s)	24.0
Intersection Capacity Utilization	63.5%	ICU Level of Service	B
Analysis Period (min)	15		
c Critical Lane Group			

Movement	EBL	EBT	EBR	WBL	WBT	WBR	NBL	NBT	NBR	SBL	SBT	SBR
Lane Configurations												
Volume (vph)	163	433	276	21	435	62	172	3	57	107	0	168
Ideal Flow (vphpl)	1900	1900	1900	1900	1900	1900	1900	1900	1900	1900	1900	1900
Total Lost time (s)	6.0	6.0	6.0	6.0	6.0	6.0	6.0	6.0	6.0	6.0	6.0	
Lane Util. Factor	1.00	0.95	1.00	1.00	0.95	1.00	0.95	0.95	1.00	1.00	1.00	
Frt	1.00	1.00	0.85	1.00	1.00	0.85	1.00	1.00	0.85	1.00	0.85	
Flt Protected	0.95	1.00	1.00	0.95	1.00	1.00	0.95	0.95	1.00	0.95	1.00	
Satd. Flow (prot)	1770	3539	1583	1770	3539	1583	1681	1688	1583	1770	1583	
Flt Permitted	0.47	1.00	1.00	0.47	1.00	1.00	0.95	0.64	1.00	0.95	1.00	
Satd. Flow (perm)	879	3539	1583	882	3539	1583	1681	1133	1583	1770	1583	
Peak-hour factor, PHF	0.95	0.95	0.95	0.95	0.95	0.95	0.95	0.95	0.95	0.95	0.95	0.95
Adj. Flow (vph)	172	456	291	22	458	65	181	3	60	113	0	177
RTOR Reduction (vph)	0	0	175	0	0	39	0	0	44	0	129	0
Lane Group Flow (vph)	172	456	116	22	458	26	92	92	16	113	48	0
Turn Type	Perm		Perm	Perm		Perm	Prot		Perm	Prot		
Protected Phases		4			8		5	2		1	6	
Permitted Phases	4		4	8		8			2			
Actuated Green, G (s)	29.8	29.8	29.8	29.8	29.8	29.8	7.0	26.5	19.5	7.7	20.2	
Effective Green, g (s)	29.8	29.8	29.8	29.8	29.8	29.8	7.0	26.5	19.5	7.7	20.2	
Actuated g/C Ratio	0.40	0.40	0.40	0.40	0.40	0.40	0.09	0.35	0.26	0.10	0.27	
Clearance Time (s)	6.0	6.0	6.0	6.0	6.0	6.0	6.0	6.0	6.0	6.0	6.0	
Vehicle Extension (s)	3.0	3.0	3.0	3.0	3.0	3.0	3.0	3.0	3.0	3.0	3.0	
Lane Grp Cap (vph)	349	1406	629	350	1406	629	157	452	412	182	426	
v/s Ratio Prot		0.13			0.13		0.05	0.02		c0.06	0.03	
v/s Ratio Perm	c0.20		0.07	0.02		0.02		c0.05	0.01			
v/c Ratio	0.49	0.32	0.18	0.06	0.33	0.04	0.59	0.20	0.04	0.62	0.11	
Uniform Delay, d1	16.9	15.6	14.7	14.0	15.6	13.8	32.6	16.9	20.7	32.3	20.6	
Progression Factor	0.72	0.70	1.93	1.14	1.03	2.34	1.00	1.00	1.00	1.00	1.00	
Incremental Delay, d2	4.3	0.5	0.6	0.3	0.5	0.1	5.5	0.2	0.2	6.4	0.5	
Delay (s)	16.4	11.5	29.0	16.1	16.7	32.5	38.1	17.1	20.9	38.7	21.2	
Level of Service	B	B	C	B	B	C	D	B	C	D	C	
Approach Delay (s)		18.0			18.5			26.0			28.0	
Approach LOS		B			B			C			C	

Intersection Summary			
HCM Average Control Delay	20.6	HCM Level of Service	C
HCM Volume to Capacity ratio	0.41		
Actuated Cycle Length (s)	75.0	Sum of lost time (s)	18.0
Intersection Capacity Utilization	56.3%	ICU Level of Service	B
Analysis Period (min)	15		
c Critical Lane Group			

Movement	EBL	EBR	NBL	NBT	SBT	SBR
Lane Configurations						
Volume (veh/h)	123	48	70	260	301	150
Sign Control	Stop			Free	Free	
Grade	0%			0%	0%	
Peak Hour Factor	0.95	0.95	0.95	0.95	0.95	0.95
Hourly flow rate (vph)	129	51	74	274	317	158
Pedestrians						
Lane Width (ft)						
Walking Speed (ft/s)						
Percent Blockage						
Right turn flare (veh)						
Median type				None	None	
Median storage veh)						
Upstream signal (ft)					1305	
pX, platoon unblocked						
vC, conflicting volume	738	317	475			
vC1, stage 1 conf vol						
vC2, stage 2 conf vol						
vCu, unblocked vol	738	317	475			
tC, single (s)	6.4	6.2	4.1			
tC, 2 stage (s)						
tF (s)	3.5	3.3	2.2			
p0 queue free %	64	93	93			
cM capacity (veh/h)	359	724	1087			

Direction, Lane #	EB 1	EB 2	NB 1	NB 2	SB 1	SB 2
Volume Total	129	51	74	274	317	158
Volume Left	129	0	74	0	0	0
Volume Right	0	51	0	0	0	158
cSH	359	724	1087	1700	1700	1700
Volume to Capacity	0.36	0.07	0.07	0.16	0.19	0.09
Queue Length 95th (ft)	40	6	5	0	0	0
Control Delay (s)	20.6	10.3	8.6	0.0	0.0	0.0
Lane LOS	C	B	A			
Approach Delay (s)	17.7		1.8		0.0	
Approach LOS	C					

Intersection Summary			
Average Delay	3.8		
Intersection Capacity Utilization	36.5%	ICU Level of Service	A
Analysis Period (min)	15		

Movement	EBL	EBT	EBR	WBL	WBT	WBR	NBL	NBT	NBR	SBL	SBT	SBR
Lane Configurations												
Volume (vph)	73	80	132	497	81	86	92	1000	503	110	1048	57
Ideal Flow (vphpl)	1900	1900	1900	1900	1900	1900	1900	1900	1900	1900	1900	1900
Total Lost time (s)		6.0		6.0	6.0		6.0	6.0	6.0	6.0	6.0	
Lane Util. Factor		0.95		0.97	1.00		1.00	0.95	1.00	1.00	0.91	
Frt		0.93		1.00	0.92		1.00	1.00	0.85	1.00	0.99	
Flt Protected		0.99		0.95	1.00		0.95	1.00	1.00	0.95	1.00	
Satd. Flow (prot)		3252		3433	1718		1770	3539	1583	1770	5046	
Flt Permitted		0.99		0.95	1.00		0.18	1.00	1.00	0.17	1.00	
Satd. Flow (perm)		3252		3433	1718		338	3539	1583	316	5046	
Peak-hour factor, PHF	0.95	0.95	0.95	0.95	0.95	0.95	0.95	0.95	0.95	0.95	0.95	0.95
Adj. Flow (vph)	77	84	139	523	85	91	97	1053	529	116	1103	60
RTOR Reduction (vph)	0	107	0	0	27	0	0	0	223	0	3	0
Lane Group Flow (vph)	0	193	0	523	149	0	97	1053	306	116	1160	0
Turn Type	Split			Split			pm+pt		Perm	pm+pt		
Protected Phases	4	4		8	8		5	2		1	6	
Permitted Phases							2		2	6		
Actuated Green, G (s)		13.6		28.3	28.3		83.2	74.7	74.7	85.0	75.6	
Effective Green, g (s)		13.6		28.3	28.3		83.2	74.7	74.7	85.0	75.6	
Actuated g/C Ratio		0.09		0.19	0.19		0.55	0.50	0.50	0.57	0.50	
Clearance Time (s)		6.0		6.0	6.0		6.0	6.0	6.0	6.0	6.0	
Vehicle Extension (s)		3.0		3.0	3.0		3.0	3.0	3.0	3.0	3.0	
Lane Grp Cap (vph)		295		648	324		269	1762	788	270	2543	
v/s Ratio Prot		c0.06		c0.15	0.09		0.02	c0.30		c0.03	0.23	
v/s Ratio Perm							0.18		0.19	0.22		
v/c Ratio		0.65		0.81	0.46		0.36	0.60	0.39	0.43	0.46	
Uniform Delay, d1		65.9		58.2	54.1		16.9	26.9	23.4	18.6	24.0	
Progression Factor		1.00		0.43	0.31		0.44	0.45	0.55	0.32	0.44	
Incremental Delay, d2		5.1		6.4	0.9		0.7	1.3	1.3	0.9	0.5	
Delay (s)		71.0		31.7	17.5		8.2	13.3	14.1	6.8	11.0	
Level of Service		E		C	B		A	B	B	A	B	
Approach Delay (s)		71.0			28.1			13.3			10.6	
Approach LOS		E			C			B			B	

Intersection Summary			
HCM Average Control Delay	19.4	HCM Level of Service	B
HCM Volume to Capacity ratio	0.64		
Actuated Cycle Length (s)	150.0	Sum of lost time (s)	24.0
Intersection Capacity Utilization	76.5%	ICU Level of Service	D
Analysis Period (min)	15		
c Critical Lane Group			

Movement	EBL	EBT	EBR	WBL	WBT	WBR	NBL	NBT	NBR	SBL	SBT	SBR
Lane Configurations												
Volume (vph)	89	613	33	6	635	144	59	55	9	141	97	64
Ideal Flow (vphpl)	1900	1900	1900	1900	1900	1900	1900	1900	1900	1900	1900	1900
Total Lost time (s)	6.0	6.0		6.0	6.0		6.0	6.0		6.0	6.0	
Lane Util. Factor	1.00	0.95		1.00	0.95		1.00	0.95		1.00	0.95	
Frt	1.00	0.99		1.00	0.97		1.00	0.98		1.00	0.94	
Flt Protected	0.95	1.00		0.95	1.00		0.95	1.00		0.95	1.00	
Satd. Flow (prot)	1770	3512		1770	3441		1770	3468		1770	3329	
Flt Permitted	0.13	1.00		0.34	1.00		0.95	1.00		0.95	1.00	
Satd. Flow (perm)	251	3512		624	3441		1770	3468		1770	3329	
Peak-hour factor, PHF	0.95	0.95	0.95	0.95	0.95	0.95	0.95	0.95	0.95	0.95	0.95	0.95
Adj. Flow (vph)	94	645	35	6	668	152	62	58	9	148	102	67
RTOR Reduction (vph)	0	3	0	0	15	0	0	6	0	0	55	0
Lane Group Flow (vph)	94	677	0	6	805	0	62	61	0	148	114	0
Turn Type	pm+pt			pm+pt			Prot			Prot		
Protected Phases	7	4		3	8		5	2		1	6	
Permitted Phases	4			8								
Actuated Green, G (s)	64.7	57.4		48.7	47.4		40.1	49.5		17.8	27.2	
Effective Green, g (s)	64.7	57.4		48.7	47.4		40.1	49.5		17.8	27.2	
Actuated g/C Ratio	0.43	0.38		0.32	0.32		0.27	0.33		0.12	0.18	
Clearance Time (s)	6.0	6.0		6.0	6.0		6.0	6.0		6.0	6.0	
Vehicle Extension (s)	3.0	3.0		3.0	3.0		3.0	3.0		3.0	3.0	
Lane Grp Cap (vph)	223	1344		213	1087		473	1144		210	604	
v/s Ratio Prot	c0.03	c0.19		0.00	c0.23		c0.04	0.02		c0.08	c0.03	
v/s Ratio Perm	0.15			0.01								
v/c Ratio	0.42	0.50		0.03	0.74		0.13	0.05		0.70	0.19	
Uniform Delay, d1	29.7	35.4		34.5	45.8		41.7	34.3		63.6	52.0	
Progression Factor	0.60	0.61		0.92	0.97		1.18	0.86		1.00	1.00	
Incremental Delay, d2	1.1	0.3		0.1	2.6		0.5	0.1		10.3	0.2	
Delay (s)	18.9	22.0		31.8	47.0		49.9	29.5		73.8	52.2	
Level of Service	B	C		C	D		D	C		E	D	
Approach Delay (s)		21.6			46.9			39.3			62.3	
Approach LOS		C			D			D			E	

Intersection Summary			
HCM Average Control Delay	39.2	HCM Level of Service	D
HCM Volume to Capacity ratio	0.51		
Actuated Cycle Length (s)	150.0	Sum of lost time (s)	30.0
Intersection Capacity Utilization	58.2%	ICU Level of Service	B
Analysis Period (min)	15		
c Critical Lane Group			

Movement	EBL	EBT	EBR	WBL	WBT	WBR	NBL	NBT	NBR	SBL	SBT	SBR
Lane Configurations												
Volume (vph)	125	846	50	50	830	154	50	50	50	98	50	154
Ideal Flow (vphpl)	1900	1900	1900	1900	1900	1900	1900	1900	1900	1900	1900	1900
Total Lost time (s)	6.0	6.0		6.0	6.0		6.0	6.0		6.0	6.0	
Lane Util. Factor	1.00	0.95		1.00	0.95		1.00	1.00		1.00	1.00	
Frt	1.00	0.99		1.00	0.98		1.00	0.93		1.00	0.89	
Flt Protected	0.95	1.00		0.95	1.00		0.95	1.00		0.95	1.00	
Satd. Flow (prot)	1593	3158		1593	3111		1593	1551		1593	1487	
Flt Permitted	0.95	1.00		0.95	1.00		0.95	1.00		0.95	1.00	
Satd. Flow (perm)	1593	3158		1593	3111		1593	1551		1593	1487	
Peak-hour factor, PHF	0.95	0.95	0.95	0.95	0.95	0.95	0.95	0.95	0.95	0.95	0.95	0.95
Adj. Flow (vph)	132	891	53	53	874	162	53	53	53	103	53	162
RTOR Reduction (vph)	0	3	0	0	10	0	0	23	0	0	71	0
Lane Group Flow (vph)	132	941	0	53	1026	0	53	83	0	103	144	0
Turn Type	Prot			Prot			Prot			Prot		
Protected Phases	5	2		1	6		3	8		7	4	
Permitted Phases												
Actuated Green, G (s)	22.0	77.6		8.2	63.8		8.2	25.8		14.4	32.0	
Effective Green, g (s)	22.0	77.6		8.2	63.8		8.2	25.8		14.4	32.0	
Actuated g/C Ratio	0.15	0.52		0.05	0.43		0.05	0.17		0.10	0.21	
Clearance Time (s)	6.0	6.0		6.0	6.0		6.0	6.0		6.0	6.0	
Vehicle Extension (s)	3.0	3.0		3.0	3.0		3.0	3.0		3.0	3.0	
Lane Grp Cap (vph)	234	1634		87	1323		87	267		153	317	
v/s Ratio Prot	c0.08	c0.30		0.03	c0.33		0.03	0.05		c0.06	c0.10	
v/s Ratio Perm												
v/c Ratio	0.56	0.58		0.61	0.78		0.61	0.31		0.67	0.45	
Uniform Delay, d1	59.5	24.9		69.3	37.0		69.3	54.3		65.5	51.4	
Progression Factor	1.18	0.79		1.25	0.27		1.00	1.00		1.00	1.00	
Incremental Delay, d2	8.3	1.3		9.0	3.5		11.5	0.7		11.1	4.7	
Delay (s)	78.7	20.9		96.0	13.5		80.8	55.0		76.6	56.1	
Level of Service	E	C		F	B		F	D		E	E	
Approach Delay (s)		28.0			17.5			63.6			62.7	
Approach LOS		C			B			E			E	

Intersection Summary			
HCM Average Control Delay	30.0	HCM Level of Service	C
HCM Volume to Capacity ratio	0.68		
Actuated Cycle Length (s)	150.0	Sum of lost time (s)	24.0
Intersection Capacity Utilization	75.4%	ICU Level of Service	D
Analysis Period (min)	15		
c Critical Lane Group			

Movement	EBL	EBT	EBR	WBL	WBT	WBR	NBL	NBT	NBR	SBL	SBT	SBR
Lane Configurations												
Volume (vph)	7	0	10	114	0	17	9	1583	179	24	1617	10
Ideal Flow (vphpl)	1900	1900	1900	1900	1900	1900	1900	1900	1900	1900	1900	1900
Total Lost time (s)		6.0		6.0		6.0	6.0	6.0		6.0	6.0	
Lane Util. Factor		1.00		1.00		1.00	1.00	0.91		1.00	0.91	
Frt		0.92		1.00		0.85	1.00	0.98		1.00	1.00	
Flt Protected		0.98		0.95		1.00	0.95	1.00		0.95	1.00	
Satd. Flow (prot)		1676		1770		1583	1770	5008		1770	5080	
Flt Permitted		0.98		0.95		1.00	0.11	1.00		0.09	1.00	
Satd. Flow (perm)		1676		1770		1583	205	5008		171	5080	
Peak-hour factor, PHF	0.95	0.95	0.95	0.95	0.95	0.95	0.95	0.95	0.95	0.95	0.95	0.95
Adj. Flow (vph)	7	0	11	120	0	18	9	1666	188	25	1702	11
RTOR Reduction (vph)	0	10	0	0	0	16	0	6	0	0	0	0
Lane Group Flow (vph)	0	8	0	120	0	2	9	1848	0	25	1713	0
Turn Type	Split			custom		custom	Perm			Perm		
Protected Phases	4	4		8				2			6	
Permitted Phases				8		8	2			6		
Actuated Green, G (s)		7.6		15.5		15.5	108.9	108.9		108.9	108.9	
Effective Green, g (s)		7.6		15.5		15.5	108.9	108.9		108.9	108.9	
Actuated g/C Ratio		0.05		0.10		0.10	0.73	0.73		0.73	0.73	
Clearance Time (s)		6.0		6.0		6.0	6.0	6.0		6.0	6.0	
Vehicle Extension (s)		3.0		3.0		3.0	3.0	3.0		3.0	3.0	
Lane Grp Cap (vph)		85		183		164	149	3636		124	3688	
v/s Ratio Prot		c0.00		c0.07				c0.37			0.34	
v/s Ratio Perm						0.00	0.04			0.15		
v/c Ratio		0.09		0.66		0.01	0.06	0.51		0.20	0.46	
Uniform Delay, d1		67.9		64.7		60.4	5.9	8.9		6.6	8.5	
Progression Factor		1.00		0.94		1.00	0.69	0.58		0.91	0.93	
Incremental Delay, d2		0.5		6.8		0.0	0.6	0.4		3.1	0.4	
Delay (s)		68.4		67.8		60.4	4.7	5.6		9.1	8.2	
Level of Service		E		E		E	A	A		A	A	
Approach Delay (s)		68.4			66.8			5.6			8.3	
Approach LOS		E			E			A			A	

Intersection Summary			
HCM Average Control Delay	9.4	HCM Level of Service	A
HCM Volume to Capacity ratio	0.50		
Actuated Cycle Length (s)	150.0	Sum of lost time (s)	18.0
Intersection Capacity Utilization	56.2%	ICU Level of Service	B
Analysis Period (min)	15		
c Critical Lane Group			

Movement	EBL	EBT	EBR	WBL	WBT	WBR	NBL	NBT	NBR	SBL	SBT	SBR
Lane Configurations												
Volume (vph)	292	211	101	456	217	60	229	1464	455	67	1473	285
Ideal Flow (vphpl)	1900	1900	1900	1900	1900	1900	1900	1900	1900	1900	1900	1900
Total Lost time (s)	6.0	6.0		6.0	6.0	6.0	6.0	6.0	6.0	6.0	6.0	
Lane Util. Factor	0.97	0.95		0.97	0.95	1.00	1.00	0.91	1.00	1.00	0.91	
Frt	1.00	0.95		1.00	1.00	0.85	1.00	1.00	0.85	1.00	0.98	
Flt Protected	0.95	1.00		0.95	1.00	1.00	0.95	1.00	1.00	0.95	1.00	
Satd. Flow (prot)	3433	3368		3433	3539	1583	1770	5085	1583	1770	4962	
Flt Permitted	0.95	1.00		0.95	1.00	1.00	0.05	1.00	1.00	0.12	1.00	
Satd. Flow (perm)	3433	3368		3433	3539	1583	101	5085	1583	228	4962	
Peak-hour factor, PHF	0.95	0.95	0.95	0.95	0.95	0.95	0.95	0.95	0.95	0.95	0.95	0.95
Adj. Flow (vph)	307	222	106	480	228	63	241	1541	479	71	1551	300
RTOR Reduction (vph)	0	39	0	0	0	54	0	0	219	0	18	0
Lane Group Flow (vph)	307	289	0	480	228	9	241	1541	260	71	1833	0
Turn Type	Prot			Prot		Perm	pm+pt		Perm	pm+pt		
Protected Phases	7	4		3	8		5	2		1	6	
Permitted Phases						8	2		2	6		
Actuated Green, G (s)	17.8	15.6		24.0	21.8	21.8	92.4	79.6	79.6	74.7	67.9	
Effective Green, g (s)	17.8	15.6		24.0	21.8	21.8	92.4	79.6	79.6	74.7	67.9	
Actuated g/C Ratio	0.12	0.10		0.16	0.15	0.15	0.62	0.53	0.53	0.50	0.45	
Clearance Time (s)	6.0	6.0		6.0	6.0	6.0	6.0	6.0	6.0	6.0	6.0	
Vehicle Extension (s)	3.0	3.0		3.0	3.0	3.0	3.0	3.0	3.0	3.0	3.0	
Lane Grp Cap (vph)	407	350		549	514	230	268	2698	840	183	2246	
v/s Ratio Prot	0.09	c0.09		c0.14	0.06		c0.11	0.30		0.02	0.37	
v/s Ratio Perm						0.01	c0.44		0.16	0.18		
v/c Ratio	0.75	0.83		0.87	0.44	0.04	0.90	0.57	0.31	0.39	0.82	
Uniform Delay, d1	64.0	65.9		61.5	58.6	55.1	48.6	23.7	19.8	20.6	35.6	
Progression Factor	1.00	1.00		0.88	0.88	1.03	1.26	0.67	0.14	0.80	0.77	
Incremental Delay, d2	7.7	14.7		12.9	0.5	0.1	28.0	0.8	0.9	1.3	3.2	
Delay (s)	71.7	80.6		66.9	51.8	57.0	89.2	16.7	3.7	17.7	30.5	
Level of Service	E	F		E	D	E	F	B	A	B	C	
Approach Delay (s)		76.3			61.6			21.7			30.1	
Approach LOS		E			E			C			C	

Intersection Summary			
HCM Average Control Delay	36.3	HCM Level of Service	D
HCM Volume to Capacity ratio	0.86		
Actuated Cycle Length (s)	150.0	Sum of lost time (s)	18.0
Intersection Capacity Utilization	89.6%	ICU Level of Service	E
Analysis Period (min)	15		
c Critical Lane Group			

Movement	EBL	EBT	EBR	WBL	WBT	WBR	NBL	NBT	NBR	SBL	SBT	SBR
Lane Configurations												
Volume (vph)	0	0	0	165	2	205	255	1954	0	0	1572	516
Ideal Flow (vphpl)	1900	1900	1900	1900	1900	1900	1900	1900	1900	1900	1900	1900
Total Lost time (s)				6.0	6.0	6.0	6.0	6.0			6.0	6.0
Lane Util. Factor				0.95	0.95	1.00	0.97	0.86			0.81	1.00
Frt				1.00	1.00	0.85	1.00	1.00			1.00	0.85
Flt Protected				0.95	0.95	1.00	0.95	1.00			1.00	1.00
Satd. Flow (prot)				1681	1687	1583	3433	6408			7544	1583
Flt Permitted				0.95	0.95	1.00	0.95	1.00			1.00	1.00
Satd. Flow (perm)				1681	1687	1583	3433	6408			7544	1583
Peak-hour factor, PHF	0.95	0.95	0.95	0.95	0.95	0.95	0.95	0.95	0.95	0.95	0.95	0.95
Adj. Flow (vph)	0	0	0	174	2	216	268	2057	0	0	1655	543
RTOR Reduction (vph)	0	0	0	0	0	13	0	0	0	0	0	216
Lane Group Flow (vph)	0	0	0	89	87	203	268	2057	0	0	1655	327
Turn Type				Perm		Perm	Prot					Perm
Protected Phases					8		5	2			6	
Permitted Phases				8		8						6
Actuated Green, G (s)				24.6	24.6	24.6	17.0	113.4			90.4	90.4
Effective Green, g (s)				24.6	24.6	24.6	17.0	113.4			90.4	90.4
Actuated g/C Ratio				0.16	0.16	0.16	0.11	0.76			0.60	0.60
Clearance Time (s)				6.0	6.0	6.0	6.0	6.0			6.0	6.0
Vehicle Extension (s)				3.0	3.0	3.0	3.0	3.0			3.0	3.0
Lane Grp Cap (vph)				276	277	260	389	4844			4547	954
v/s Ratio Prot							c0.08	c0.32			0.22	
v/s Ratio Perm				0.05	0.05	c0.13						0.21
v/c Ratio				0.32	0.31	0.78	0.69	0.42			0.36	0.34
Uniform Delay, d1				55.3	55.3	60.1	64.0	6.6			15.2	14.9
Progression Factor				1.00	1.00	1.00	0.80	0.56			0.27	0.34
Incremental Delay, d2				0.7	0.7	14.2	4.7	0.3			0.1	0.6
Delay (s)				56.0	55.9	74.3	56.0	3.9			4.3	5.6
Level of Service				E	E	E	E	A			A	A
Approach Delay (s)		0.0			66.1			9.9			4.6	
Approach LOS		A			E			A			A	

Intersection Summary			
HCM Average Control Delay	12.0	HCM Level of Service	B
HCM Volume to Capacity ratio	0.51		
Actuated Cycle Length (s)	150.0	Sum of lost time (s)	12.0
Intersection Capacity Utilization	58.8%	ICU Level of Service	B
Analysis Period (min)	15		
c Critical Lane Group			

Movement	EBL	EBT	EBR	WBL	WBT	WBR	NBL	NBT	NBR	SBL	SBT	SBR
Lane Configurations												
Volume (vph)	332	0	166	0	0	0	0	1867	228	142	1752	0
Ideal Flow (vphpl)	1900	1900	1900	1900	1900	1900	1900	1900	1900	1900	1900	1900
Total Lost time (s)	6.0		6.0					6.0		6.0	6.0	
Lane Util. Factor	0.97		0.88					0.76		0.97	0.91	
Frt	1.00		0.85					0.98		1.00	1.00	
Flt Protected	0.95		1.00					1.00		0.95	1.00	
Satd. Flow (prot)	3433		2787					8355		3433	5085	
Flt Permitted	0.95		1.00					1.00		0.95	1.00	
Satd. Flow (perm)	3433		2787					8355		3433	5085	
Peak-hour factor, PHF	0.95	0.95	0.95	0.95	0.95	0.95	0.95	0.95	0.95	0.95	0.95	0.95
Adj. Flow (vph)	349	0	175	0	0	0	0	1965	240	149	1844	0
RTOR Reduction (vph)	0	0	42	0	0	0	0	10	0	0	0	0
Lane Group Flow (vph)	349	0	133	0	0	0	0	2195	0	149	1844	0
Turn Type	custom		custom							Prot		
Protected Phases								2		1	6	
Permitted Phases	4		4									
Actuated Green, G (s)	20.9		20.9					99.3		11.8	117.1	
Effective Green, g (s)	20.9		20.9					99.3		11.8	117.1	
Actuated g/C Ratio	0.14		0.14					0.66		0.08	0.78	
Clearance Time (s)	6.0		6.0					6.0		6.0	6.0	
Vehicle Extension (s)	3.0		3.0					3.0		3.0	3.0	
Lane Grp Cap (vph)	478		388					5531		270	3970	
v/s Ratio Prot								0.26		0.04	c0.36	
v/s Ratio Perm	c0.10		0.05									
v/c Ratio	0.73		0.34					0.40		0.55	0.46	
Uniform Delay, d1	61.8		58.3					11.6		66.6	5.7	
Progression Factor	1.00		1.00					1.00		0.87	0.96	
Incremental Delay, d2	5.7		0.5					0.2		2.3	0.4	
Delay (s)	67.5		58.9					11.8		60.4	5.8	
Level of Service	E		E					B		E	A	
Approach Delay (s)		64.6			0.0			11.8			9.9	
Approach LOS		E			A			B			A	

Intersection Summary			
HCM Average Control Delay	16.9	HCM Level of Service	B
HCM Volume to Capacity ratio	0.50		
Actuated Cycle Length (s)	150.0	Sum of lost time (s)	12.0
Intersection Capacity Utilization	58.8%	ICU Level of Service	B
Analysis Period (min)	15		
c Critical Lane Group			

Movement	WBL	WBR	NBT	NBR	SBL	SBT
Lane Configurations						
Volume (vph)	25	25	607	6	25	889
Ideal Flow (vphpl)	1900	1900	1900	1900	1900	1900
Total Lost time (s)	6.0		6.0			6.0
Lane Util. Factor	1.00		0.95			0.95
Frt	0.93		1.00			1.00
Flt Protected	0.98		1.00			1.00
Satd. Flow (prot)	1695		3534			3534
Flt Permitted	0.98		1.00			0.92
Satd. Flow (perm)	1695		3534			3253
Peak-hour factor, PHF	0.95	0.95	0.95	0.95	0.95	0.95
Adj. Flow (vph)	26	26	639	6	26	936
RTOR Reduction (vph)	24	0	0	0	0	0
Lane Group Flow (vph)	28	0	645	0	0	962
Turn Type					pm+pt	
Protected Phases	8		2		1	6
Permitted Phases					6	
Actuated Green, G (s)	9.2		128.8			128.8
Effective Green, g (s)	9.2		128.8			128.8
Actuated g/C Ratio	0.06		0.86			0.86
Clearance Time (s)	6.0		6.0			6.0
Vehicle Extension (s)	3.0		3.0			3.0
Lane Grp Cap (vph)	104		3035			2793
v/s Ratio Prot	c0.02		0.18			
v/s Ratio Perm						c0.30
v/c Ratio	0.27		0.21			0.34
Uniform Delay, d1	67.2		1.8			2.1
Progression Factor	1.00		0.29			0.06
Incremental Delay, d2	1.4		0.1			0.0
Delay (s)	68.5		0.7			0.2
Level of Service	E		A			A
Approach Delay (s)	68.5		0.7			0.2
Approach LOS	E		A			A

Intersection Summary			
HCM Average Control Delay	2.5	HCM Level of Service	A
HCM Volume to Capacity ratio	0.34		
Actuated Cycle Length (s)	150.0	Sum of lost time (s)	12.0
Intersection Capacity Utilization	55.9%	ICU Level of Service	B
Analysis Period (min)	15		
c Critical Lane Group			

Movement	EBL	EBT	EBR	WBL	WBT	WBR	NBL	NBT	NBR	SBL	SBT	SBR
Lane Configurations												
Volume (vph)	181	25	59	25	25	25	61	2118	42	25	1913	176
Ideal Flow (vphpl)	1900	1900	1900	1900	1900	1900	1900	1900	1900	1900	1900	1900
Total Lost time (s)		6.0	6.0		6.0		6.0	6.0		6.0	6.0	
Lane Util. Factor		1.00	1.00		1.00		1.00	0.86		1.00	0.86	
Frt		1.00	0.85		0.95		1.00	1.00		1.00	0.99	
Flt Protected		0.96	1.00		0.98		0.95	1.00		0.95	1.00	
Satd. Flow (prot)		1784	1583		1750		1770	6389		1770	6327	
Flt Permitted		0.70	1.00		0.84		0.95	1.00		0.95	1.00	
Satd. Flow (perm)		1298	1583		1496		1770	6389		1770	6327	
Peak-hour factor, PHF	0.95	0.95	0.95	0.95	0.95	0.95	0.95	0.95	0.95	0.95	0.95	0.95
Adj. Flow (vph)	191	26	62	26	26	26	64	2229	44	26	2014	185
RTOR Reduction (vph)	0	0	49	0	20	0	0	3	0	0	18	0
Lane Group Flow (vph)	0	217	13	0	58	0	64	2270	0	26	2181	0
Turn Type	Perm		Perm	Perm			Prot			Prot		
Protected Phases		4			8		5	2		1	6	
Permitted Phases	4		4	8								
Actuated Green, G (s)		16.2	16.2		16.2		4.7	39.2		1.6	36.1	
Effective Green, g (s)		16.2	16.2		16.2		4.7	39.2		1.6	36.1	
Actuated g/C Ratio		0.22	0.22		0.22		0.06	0.52		0.02	0.48	
Clearance Time (s)		6.0	6.0		6.0		6.0	6.0		6.0	6.0	
Vehicle Extension (s)		3.0	3.0		3.0		3.0	3.0		3.0	3.0	
Lane Grp Cap (vph)		280	342		323		111	3339		38	3045	
v/s Ratio Prot							c0.04	c0.36		0.01	0.34	
v/s Ratio Perm		c0.17	0.01		0.04							
v/c Ratio		0.78	0.04		0.18		0.58	0.68		0.68	0.72	
Uniform Delay, d1		27.7	23.2		24.0		34.2	13.3		36.4	15.4	
Progression Factor		1.00	1.00		1.00		1.24	1.49		1.10	1.04	
Incremental Delay, d2		12.6	0.0		0.3		4.8	0.8		25.8	0.9	
Delay (s)		40.3	23.3		24.2		47.1	20.5		65.8	16.9	
Level of Service		D	C		C		D	C		E	B	
Approach Delay (s)		36.5			24.2			21.2			17.5	
Approach LOS		D			C			C			B	

Intersection Summary			
HCM Average Control Delay	20.4	HCM Level of Service	C
HCM Volume to Capacity ratio	0.74		
Actuated Cycle Length (s)	75.0	Sum of lost time (s)	18.0
Intersection Capacity Utilization	67.7%	ICU Level of Service	C
Analysis Period (min)	15		
c Critical Lane Group			

Movement	WBL	WBR	NBT	NBR	SBL	SBT
Lane Configurations						
Volume (veh/h)	0	17	1016	39	0	1231
Sign Control	Stop		Free			Free
Grade	0%		0%			0%
Peak Hour Factor	0.95	0.95	0.95	0.95	0.95	0.95
Hourly flow rate (vph)	0	18	1069	41	0	1296
Pedestrians						
Lane Width (ft)						
Walking Speed (ft/s)						
Percent Blockage						
Right turn flare (veh)						
Median type			None			None
Median storage veh)						
Upstream signal (ft)			1039			442
pX, platoon unblocked	0.93	0.89			0.89	
vC, conflicting volume	1522	377			1111	
vC1, stage 1 conf vol						
vC2, stage 2 conf vol						
vCu, unblocked vol	479	0			676	
tC, single (s)	6.8	6.9			4.1	
tC, 2 stage (s)						
tF (s)	3.5	3.3			2.2	
p0 queue free %	100	98			100	
cM capacity (veh/h)	480	961			808	

Direction, Lane #	WB 1	NB 1	NB 2	NB 3	SB 1	SB 2	SB 3
Volume Total	18	428	428	255	432	432	432
Volume Left	0	0	0	0	0	0	0
Volume Right	18	0	0	41	0	0	0
cSH	961	1700	1700	1700	1700	1700	1700
Volume to Capacity	0.02	0.25	0.25	0.15	0.25	0.25	0.25
Queue Length 95th (ft)	1	0	0	0	0	0	0
Control Delay (s)	8.8	0.0	0.0	0.0	0.0	0.0	0.0
Lane LOS	A						
Approach Delay (s)	8.8	0.0			0.0		
Approach LOS	A						

Intersection Summary			
Average Delay	0.1		
Intersection Capacity Utilization	30.5%	ICU Level of Service	A
Analysis Period (min)	15		

Movement	EBL	EBT	EBR	WBL	WBT	WBR	NBL	NBT	NBR	SBL	SBT	SBR
Lane Configurations												
Volume (vph)	25	36	25	25	15	46	0	2057	27	50	2098	25
Ideal Flow (vphpl)	1900	1900	1900	1900	1900	1900	1900	1900	1900	1900	1900	1900
Total Lost time (s)	6.0	6.0		6.0	6.0			6.0		6.0	6.0	
Lane Util. Factor	1.00	1.00		1.00	1.00			0.91		1.00	0.91	
Frt	1.00	0.94		1.00	0.89			1.00		1.00	1.00	
Flt Protected	0.95	1.00		0.95	1.00			1.00		0.95	1.00	
Satd. Flow (prot)	1770	1749		1770	1653			5076		1770	5076	
Flt Permitted	0.95	1.00		0.95	1.00			1.00		0.95	1.00	
Satd. Flow (perm)	1770	1749		1770	1653			5076		1770	5076	
Peak-hour factor, PHF	0.95	0.95	0.95	0.95	0.95	0.95	0.95	0.95	0.95	0.95	0.95	0.95
Adj. Flow (vph)	26	38	26	26	16	48	0	2165	28	53	2208	26
RTOR Reduction (vph)	0	17	0	0	45	0	0	1	0	0	0	0
Lane Group Flow (vph)	26	47	0	26	19	0	0	2192	0	53	2234	0
Turn Type	Split			Split			Prot			Prot		
Protected Phases	4	4		8	8		5	2		1	6	
Permitted Phases												
Actuated Green, G (s)	9.8	9.8		9.2	9.2			99.4		7.6	113.0	
Effective Green, g (s)	9.8	9.8		9.2	9.2			99.4		7.6	113.0	
Actuated g/C Ratio	0.07	0.07		0.06	0.06			0.66		0.05	0.75	
Clearance Time (s)	6.0	6.0		6.0	6.0			6.0		6.0	6.0	
Vehicle Extension (s)	3.0	3.0		3.0	3.0			3.0		3.0	3.0	
Lane Grp Cap (vph)	116	114		109	101			3364		90	3824	
v/s Ratio Prot	0.01	c0.03		c0.01	0.01			c0.43		0.03	c0.44	
v/s Ratio Perm												
v/c Ratio	0.22	0.41		0.24	0.19			0.65		0.59	0.58	
Uniform Delay, d1	66.5	67.3		67.1	66.9			15.0		69.7	8.1	
Progression Factor	1.00	1.00		1.00	1.00			0.97		1.48	0.23	
Incremental Delay, d2	1.0	2.4		1.1	0.9			0.7		6.1	0.4	
Delay (s)	67.5	69.8		68.2	67.8			15.4		109.2	2.3	
Level of Service	E	E		E	E			B		F	A	
Approach Delay (s)		69.1			67.9			15.4			4.7	
Approach LOS		E			E			B			A	

Intersection Summary			
HCM Average Control Delay	12.2	HCM Level of Service	B
HCM Volume to Capacity ratio	0.62		
Actuated Cycle Length (s)	150.0	Sum of lost time (s)	24.0
Intersection Capacity Utilization	59.6%	ICU Level of Service	B
Analysis Period (min)	15		
c Critical Lane Group			

Movement	EBL	EBT	EBR	WBL	WBT	WBR	NBL	NBT	NBR	SBL	SBT	SBR
Lane Configurations												
Volume (veh/h)	25	79	4	4	71	8	7	73	4	6	53	62
Sign Control		Free			Free			Stop			Stop	
Grade		0%			0%			0%			0%	
Peak Hour Factor	0.95	0.95	0.95	0.95	0.95	0.95	0.95	0.95	0.95	0.95	0.95	0.95
Hourly flow rate (vph)	26	83	4	4	75	8	7	77	4	6	56	65
Pedestrians												
Lane Width (ft)												
Walking Speed (ft/s)												
Percent Blockage												
Right turn flare (veh)												
Median type		None			None							
Median storage veh)												
Upstream signal (ft)		1018										
pX, platoon unblocked												
vC, conflicting volume	83			87			314	229	85	266	227	79
vC1, stage 1 conf vol												
vC2, stage 2 conf vol												
vCu, unblocked vol	83			87			314	229	85	266	227	79
tC, single (s)	4.1			4.1			7.1	6.5	6.2	7.1	6.5	6.2
tC, 2 stage (s)												
tF (s)	2.2			2.2			3.5	4.0	3.3	3.5	4.0	3.3
p0 queue free %	98			100			99	88	100	99	92	93
cM capacity (veh/h)	1514			1509			549	657	974	613	659	982

Direction, Lane #	EB 1	EB 2	WB 1	WB 2	NB 1	NB 2	SB 1
Volume Total	26	87	4	83	7	81	127
Volume Left	26	0	4	0	7	0	6
Volume Right	0	4	0	8	0	4	65
cSH	1514	1700	1509	1700	549	668	789
Volume to Capacity	0.02	0.05	0.00	0.05	0.01	0.12	0.16
Queue Length 95th (ft)	1	0	0	0	1	10	14
Control Delay (s)	7.4	0.0	7.4	0.0	11.6	11.1	10.4
Lane LOS	A		A		B	B	B
Approach Delay (s)	1.7		0.4		11.2		10.4
Approach LOS					B		B

Intersection Summary			
Average Delay	6.1		
Intersection Capacity Utilization	26.6%	ICU Level of Service	A
Analysis Period (min)	15		

Movement	EBL	EBT	EBR	WBL	WBT	WBR	NBL	NBT	NBR	SBL	SBT	SBR
Lane Configurations												
Volume (vph)	25	882	25	25	962	48	25	8	17	15	21	28
Ideal Flow (vphpl)	1900	1900	1900	1900	1900	1900	1900	1900	1900	1900	1900	1900
Total Lost time (s)	6.0	6.0	6.0	6.0	6.0			6.0	6.0	6.0	6.0	
Lane Util. Factor	1.00	0.95	1.00	1.00	0.95			1.00	1.00	1.00	1.00	
Frt	1.00	1.00	0.85	1.00	0.99			1.00	0.85	1.00	0.91	
Flt Protected	0.95	1.00	1.00	0.95	1.00			0.96	1.00	0.95	1.00	
Satd. Flow (prot)	1770	3539	1583	1770	3514			1794	1583	1770	1704	
Flt Permitted	0.25	1.00	1.00	0.16	1.00			0.83	1.00	0.73	1.00	
Satd. Flow (perm)	462	3539	1583	294	3514			1537	1583	1369	1704	
Peak-hour factor, PHF	0.95	0.95	0.95	0.95	0.95	0.95	0.95	0.95	0.95	0.95	0.95	0.95
Adj. Flow (vph)	26	928	26	26	1013	51	26	8	18	16	22	29
RTOR Reduction (vph)	0	0	16	0	6	0	0	0	12	0	19	0
Lane Group Flow (vph)	26	928	10	26	1058	0	0	34	6	16	32	0
Turn Type	Perm		Perm	pm+pt			Perm		Perm	Perm		
Protected Phases		4		3	8			2			6	
Permitted Phases	4		4	8			2		2	6		
Actuated Green, G (s)	29.1	29.1	29.1	37.7	37.7			25.3	25.3	25.3	25.3	
Effective Green, g (s)	29.1	29.1	29.1	37.7	37.7			25.3	25.3	25.3	25.3	
Actuated g/C Ratio	0.39	0.39	0.39	0.50	0.50			0.34	0.34	0.34	0.34	
Clearance Time (s)	6.0	6.0	6.0	6.0	6.0			6.0	6.0	6.0	6.0	
Vehicle Extension (s)	3.0	3.0	3.0	3.0	3.0			3.0	3.0	3.0	3.0	
Lane Grp Cap (vph)	179	1373	614	199	1766			518	534	462	575	
v/s Ratio Prot		c0.26		0.00	c0.30						0.02	
v/s Ratio Perm	0.06		0.01	0.06				c0.02	0.00	0.01		
v/c Ratio	0.15	0.68	0.02	0.13	0.60			0.07	0.01	0.03	0.06	
Uniform Delay, d1	14.9	19.0	14.1	11.5	13.3			16.8	16.5	16.7	16.8	
Progression Factor	1.10	1.21	1.29	0.72	0.75			1.00	1.00	1.02	1.03	
Incremental Delay, d2	0.2	0.6	0.0	0.2	0.4			0.2	0.0	0.1	0.2	
Delay (s)	16.5	23.7	18.2	8.5	10.4			17.1	16.6	17.1	17.4	
Level of Service	B	C	B	A	B			B	B	B	B	
Approach Delay (s)		23.4			10.3			16.9			17.3	
Approach LOS		C			B			B			B	

Intersection Summary			
HCM Average Control Delay	16.5	HCM Level of Service	B
HCM Volume to Capacity ratio	0.44		
Actuated Cycle Length (s)	75.0	Sum of lost time (s)	18.0
Intersection Capacity Utilization	46.6%	ICU Level of Service	A
Analysis Period (min)	15		
c Critical Lane Group			

Movement	EBL	EBT	EBR	WBL	WBT	WBR	NBL	NBT	NBR	SBL	SBT	SBR
Lane Configurations												
Volume (vph)	30	10	81	37	7	31	83	2604	35	25	2535	59
Ideal Flow (vphpl)	1900	1900	1900	1900	1900	1900	1900	1900	1900	1900	1900	1900
Total Lost time (s)		6.0		6.0	6.0	6.0	6.0	6.0	6.0	6.0	6.0	6.0
Lane Util. Factor		0.95		1.00	1.00	1.00	1.00	0.91	1.00	1.00	0.91	1.00
Frt		0.90		1.00	1.00	0.85	1.00	1.00	0.85	1.00	1.00	0.85
Flt Protected		0.99		0.95	1.00	1.00	0.95	1.00	1.00	0.95	1.00	1.00
Satd. Flow (prot)		3147		1770	1863	1583	1770	5085	1583	1770	5085	1583
Flt Permitted		0.88		0.42	1.00	1.00	0.04	1.00	1.00	0.04	1.00	1.00
Satd. Flow (perm)		2799		790	1863	1583	69	5085	1583	72	5085	1583
Peak-hour factor, PHF	0.95	0.95	0.95	0.95	0.95	0.95	0.95	0.95	0.95	0.95	0.95	0.95
Adj. Flow (vph)	32	11	85	39	7	33	87	2741	37	26	2668	62
RTOR Reduction (vph)	0	74	0	0	0	29	0	0	8	0	0	14
Lane Group Flow (vph)	0	54	0	39	7	4	87	2741	29	26	2668	48
Turn Type	Perm			pm+pt		Perm	pm+pt		Perm	pm+pt		Perm
Protected Phases		4		3	8		5	2		1	6	
Permitted Phases	4			8		8	2		2	6		6
Actuated Green, G (s)		10.3		20.3	20.3	20.3	116.2	108.5	108.5	107.2	104.0	104.0
Effective Green, g (s)		10.3		20.3	20.3	20.3	116.2	108.5	108.5	107.2	104.0	104.0
Actuated g/C Ratio		0.07		0.14	0.14	0.14	0.77	0.72	0.72	0.71	0.69	0.69
Clearance Time (s)		6.0		6.0	6.0	6.0	6.0	6.0	6.0	6.0	6.0	6.0
Vehicle Extension (s)		3.0		3.0	3.0	3.0	3.0	3.0	3.0	3.0	3.0	3.0
Lane Grp Cap (vph)		192		133	252	214	141	3678	1145	88	3526	1098
v/s Ratio Prot				c0.01	0.00		c0.03	c0.54		0.01	0.52	
v/s Ratio Perm		0.02		c0.03		0.00	0.45		0.02	0.21		0.03
v/c Ratio		0.28		0.29	0.03	0.02	0.62	0.75	0.03	0.30	0.76	0.04
Uniform Delay, d1		66.3		57.5	56.3	56.2	32.9	12.5	5.8	13.7	14.8	7.3
Progression Factor		0.78		1.00	1.00	1.00	1.77	0.33	0.00	1.89	0.42	0.03
Incremental Delay, d2		0.8		1.2	0.0	0.0	6.7	1.2	0.0	1.3	1.1	0.1
Delay (s)		52.3		58.7	56.3	56.3	65.2	5.4	0.0	27.2	7.4	0.3
Level of Service		D		E	E	E	E	A	A	C	A	A
Approach Delay (s)		52.3			57.5			7.1			7.4	
Approach LOS		D			E			A			A	

Intersection Summary			
HCM Average Control Delay	8.9	HCM Level of Service	A
HCM Volume to Capacity ratio	0.68		
Actuated Cycle Length (s)	150.0	Sum of lost time (s)	18.0
Intersection Capacity Utilization	77.4%	ICU Level of Service	D
Analysis Period (min)	15		
c Critical Lane Group			

Movement	NBL	NBT	NBR2	SBL	SBT	SBR2	NEL	NER2	SWL	SWR2
Lane Configurations										
Volume (vph)	275	104	306	76	337	102	129	419	467	81
Ideal Flow (vphpl)	1900	1900	1900	1900	1900	1900	1900	1900	1900	1900
Total Lost time (s)	6.0	6.0	6.0	6.0	6.0	6.0	6.0	6.0	6.0	6.0
Lane Util. Factor	0.97	0.95	1.00	0.97	0.95	1.00	0.97	1.00	0.97	1.00
Frt	1.00	1.00	0.85	1.00	1.00	0.85	1.00	0.85	1.00	0.85
Flt Protected	0.95	1.00	1.00	0.95	1.00	1.00	0.95	1.00	0.95	1.00
Satd. Flow (prot)	3433	3539	1583	3433	3539	1583	3433	1583	3433	1583
Flt Permitted	0.95	1.00	1.00	0.95	1.00	1.00	0.95	1.00	0.95	1.00
Satd. Flow (perm)	3433	3539	1583	3433	3539	1583	3433	1583	3433	1583
Peak-hour factor, PHF	0.95	0.95	0.95	0.95	0.95	0.95	0.95	0.95	0.95	0.95
Adj. Flow (vph)	289	109	322	80	355	107	136	441	492	85
RTOR Reduction (vph)	0	0	185	0	0	68	0	243	0	54
Lane Group Flow (vph)	289	109	137	80	355	39	136	198	492	31
Turn Type	Prot		Perm	Prot		Perm	Prot	custom	Prot	custom
Protected Phases	5	2		1	6		4		8	
Permitted Phases			2			6		2		6
Actuated Green, G (s)	29.0	64.0	64.0	20.0	55.0	55.0	48.0	64.0	48.0	55.0
Effective Green, g (s)	29.0	64.0	64.0	20.0	55.0	55.0	48.0	64.0	48.0	55.0
Actuated g/C Ratio	0.19	0.43	0.43	0.13	0.37	0.37	0.32	0.43	0.32	0.37
Clearance Time (s)	6.0	6.0	6.0	6.0	6.0	6.0	6.0	6.0	6.0	6.0
Vehicle Extension (s)	3.0	3.0	3.0	3.0	3.0	3.0	3.0	3.0	3.0	3.0
Lane Grp Cap (vph)	664	1510	675	458	1298	580	1099	675	1099	580
v/s Ratio Prot	c0.08	0.03		0.02	0.10		0.04		c0.14	
v/s Ratio Perm			0.09			0.02		c0.13		0.02
v/c Ratio	0.44	0.07	0.20	0.17	0.27	0.07	0.12	0.29	0.45	0.05
Uniform Delay, d1	53.3	25.4	27.0	57.7	33.4	30.8	36.1	28.2	40.5	30.7
Progression Factor	1.41	0.20	0.67	1.00	1.00	1.00	0.90	0.10	1.00	1.00
Incremental Delay, d2	1.8	0.1	0.6	0.8	0.5	0.2	0.2	1.0	1.3	0.2
Delay (s)	76.7	5.0	18.7	58.5	34.0	31.1	32.5	4.0	41.8	30.9
Level of Service	E	A	B	E	C	C	C	A	D	C
Approach Delay (s)		39.9			37.0					
Approach LOS		D			D					

Intersection Summary			
HCM Average Control Delay	32.4	HCM Level of Service	C
HCM Volume to Capacity ratio	0.37		
Actuated Cycle Length (s)	150.0	Sum of lost time (s)	12.0
Intersection Capacity Utilization	61.9%	ICU Level of Service	B
Analysis Period (min)	15		
c Critical Lane Group			

Appendix E

Maryland State Highway Administration
Turning Movement Summary and
Level of Service

Count Date:
Conditions: Future
Design Year: 2042

Location: MD 355 @ Twinbrook Parkway
Computed By: BJM
Date: 3/28/14

Montgomery County Method

Morning Peak Hour 7:15-8:15 am

Lane Configuration

Evening Peak Hour 5:00-6:00 pm

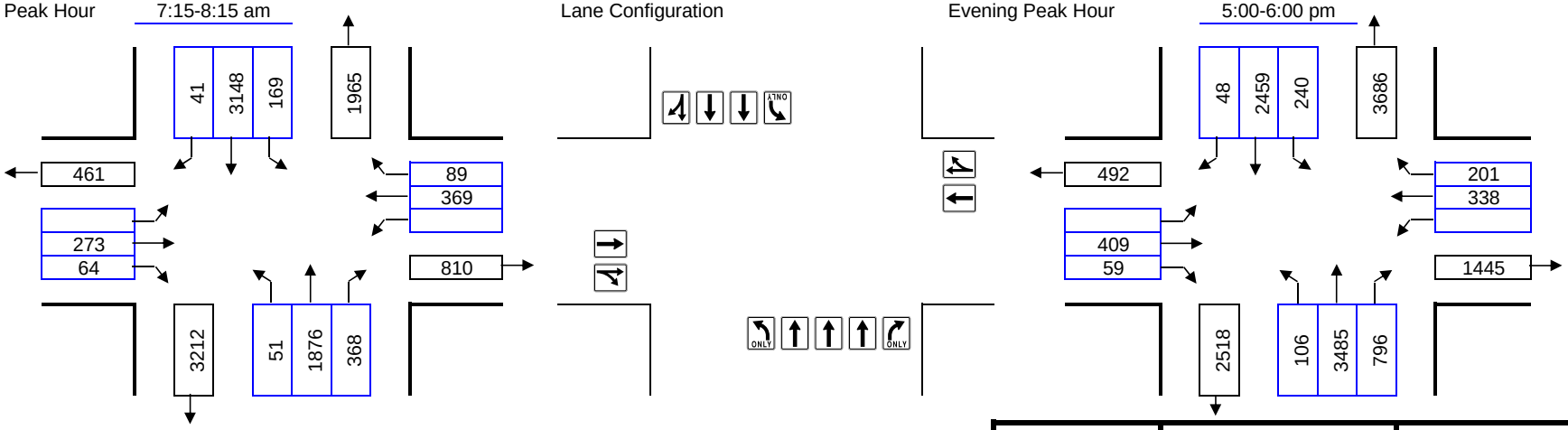

Right Turns Subtracted for Exclusive Right Turn
Overlap Phasing or Right Turn on Red:

	AM	PM
NB Approach:	NB	NB
SB Approach:	SB	SB
EB Approach:	EB	EB
WB Approach:	WB	WB

Number of Lanes	Lane Use Factor		Opposing Volume (vph)		PCE
1 =	1.00	Congestion Standard	≤	199	1.1
2 =	0.53	= 1550	≤	599	2.0
3 =	0.37	for	≤	799	3.0
4 =	0.30	North Bethesda	≤	999	4.0
Dbl-left	0.60	Policy	≥	1000	5.0
		Area			

Movement	Volume	PCE	Lane Use Factor	Lane Volume	Opposing Lefts	Critical Lane Volume	*
NBT + SBL	1876	1.00	0.37	694	169	863	
SBTR + NBL	3189	1.00	0.37	1180	51	1231	*
EBTR	337	1.00	0.53	179	0	179	
WBTR	458	1.00	0.53	243	0	243	*
					Critical Volume	1474	OK
					V/C	0.95	

Movement	Volume	PCE	Lane Use Factor	Lane Volume	Opposing Lefts	Critical Lane Volume	*
NBT + SBL	3485	1.00	0.37	1289	240	1529	*
SBTR + NBL	2507	1.00	0.37	928	106	1034	
EBTR	468	1.00	0.53	248	0	248	
WBTR	539	1.00	0.53	286	0	286	*
					Critical Volume	1815	F
					V/C	1.17	

Maryland State Highway Administration
Turning Movement Summary and
Level of Service

Count Date:
Conditions: Future SATURDAY
Design Year: 2042

Location: MD 355 @ Twinbrook Parkway
Computed By: LL
Date: 3/28/14

Montgomery County Method

Morning Peak Hour 7:15-8:15 am

Lane Configuration

Evening Peak Hour 5:00-6:00 pm

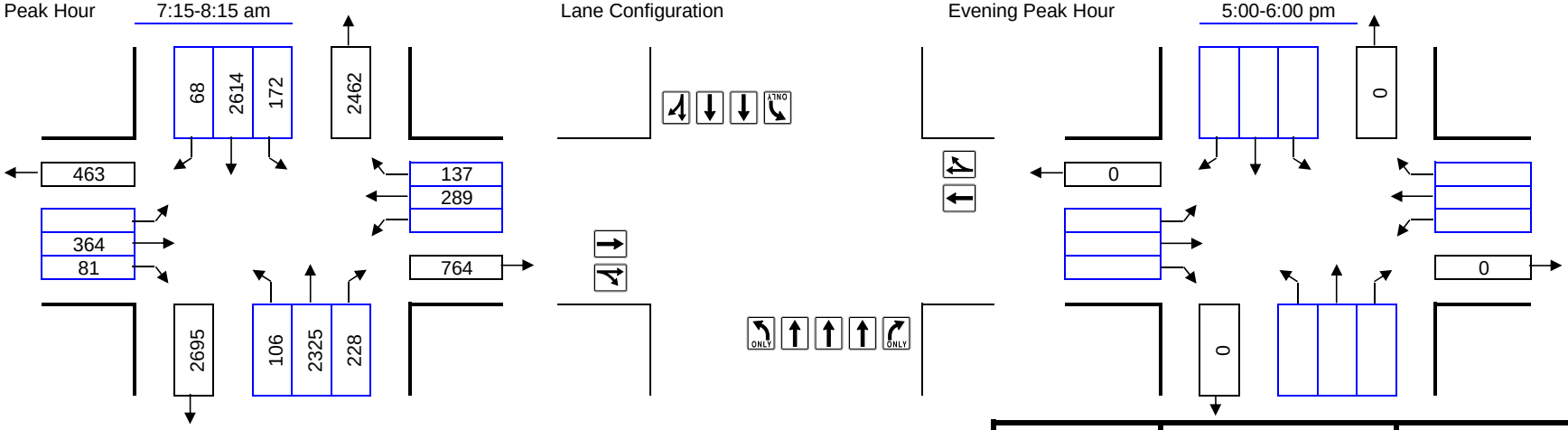

Right Turns Subtracted for Exclusive Right Turn
Overlap Phasing or Right Turn on Red:

	AM	PM
NB Approach:	NB	NB
SB Approach:	SB	SB
EB Approach:	EB	EB
WB Approach:	WB	WB

Number of Lanes	Lane Use Factor		Opposing Volume (vph)		PCE
1 =	1.00	Congestion Standard	≤	199	1.1
2 =	0.53	= 1550	≤	599	2.0
3 =	0.37	for	≤	799	3.0
4 =	0.30	North Bethesda	≤	999	4.0
Dbl-left	0.60	Policy	≥	1000	5.0
		Area			

Movement	Volume	PCE	Lane Use Factor	Lane Volume	Opposing Lefts	Critical Lane Volume	*
NBT + SBL	2325	1.00	0.37	860	172	1032	
SBTR + NBL	2682	1.00	0.37	992	106	1098	*
EBTR	445	1.00	0.53	236	0	236	*
WBTR	426	1.00	0.53	226	0	226	
					Critical Volume	1334	OK
						V/C	0.86

Movement	Volume	PCE	Lane Use Factor	Lane Volume	Opposing Lefts	Critical Lane Volume	*
					Critical Volume	0	OK
						V/C	0.00

Maryland State Highway Administration
Turning Movement Summary and
Level of Service

Count Date:
Conditions: Future
Design Year: 2042

Location: MD 355 @ Bou Ave.
Computed By: BJM
Date: 3/28/14

Montgomery County Method

Morning Peak Hour 7:15-8:15 am

Lane Configuration

Evening Peak Hour 5:00-6:00 pm

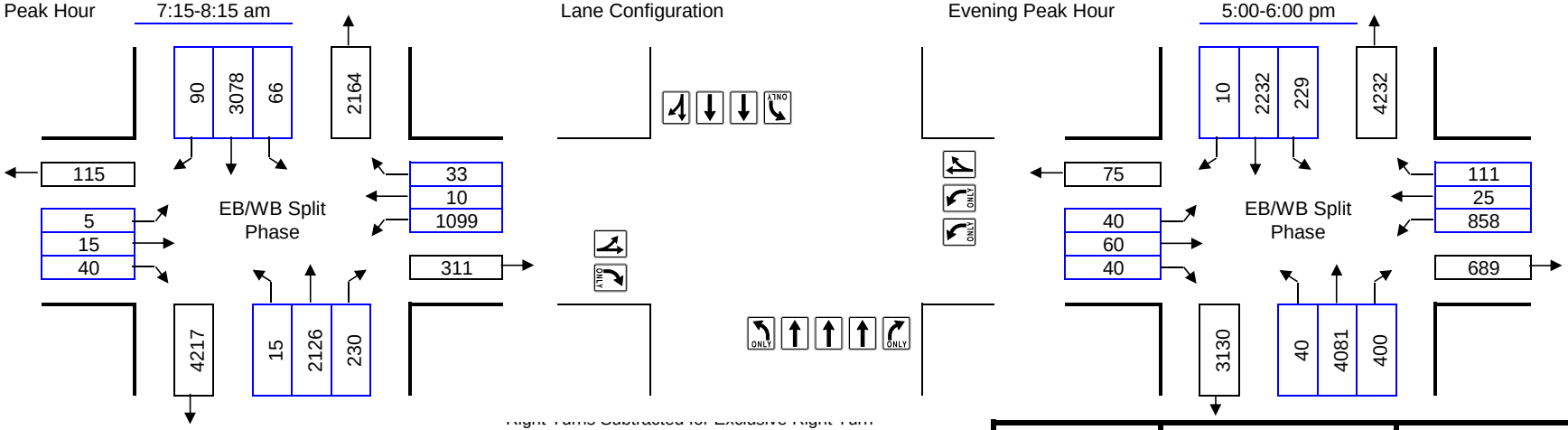

Right Turns Subtracted for Exclusive Right Turn Overlap Phasing or Right Turn on Red and Free Rights:

	AM	PM
NB Approach:	NB	NB
SB Approach:	SB	SB
EB Approach:	EB 11	EB
WB Approach:	WB	WB

Number of Lanes	Lane Use Factor		Opposing Volume (vph)		PCE
1 =	1.00	Congestion Standard	≤	199	1.1
2 =	0.53	= 1550	≤	599	2.0
3 =	0.37	for	≤	799	3.0
4 =	0.30	North Bethesda	≤	999	4.0
Dbl-left	0.60	Policy	≥	1000	5.0
		Area			

Movement	Volume	PCE	Lane Use Factor	Lane Volume	Opposing Lefts	Critical Lane Volume	*
NBT + SBL	2126	1.00	0.37	787	66	853	
SBTR + NBL	3168	1.00	0.37	1172	15	1187	*
EBR	29	1.00	1.00	29	0	29	*
WBL	1099	1.00	0.60	659	0	659	*
					Critical Volume	1875	F
					V/C	1.21	

Movement	Volume	PCE	Lane Use Factor	Lane Volume	Opposing Lefts	Critical Lane Volume	*
NBT + SBL	4081	1.00	0.37	1510	229	1739	*
SBTR + NBL	2242	1.00	0.37	830	40	870	
EBLT	100	1.00	1.00	100	0	100	*
WBL	858	1.00	0.60	515	0	515	*
					Critical Volume	2354	F
					V/C	1.52	

Maryland State Highway Administration
Turning Movement Summary and
Level of Service

Count Date:
Conditions: Future SATURDAY
Design Year: 2042

Location: MD 355 @ Bou Ave.
Computed By: LL
Date: 3/28/14

Montgomery County Method

Morning Peak Hour 7:15-8:15 am

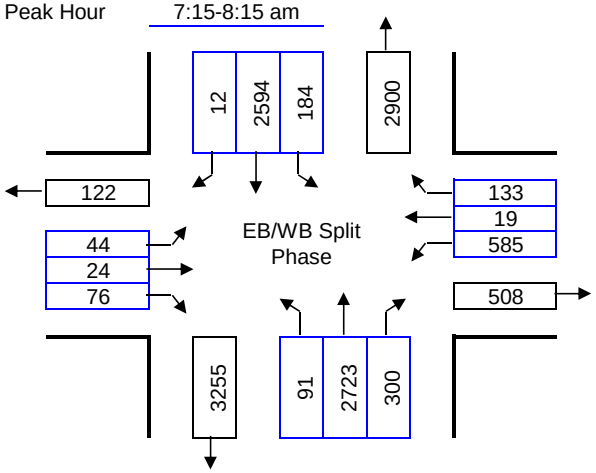

Lane Configuration

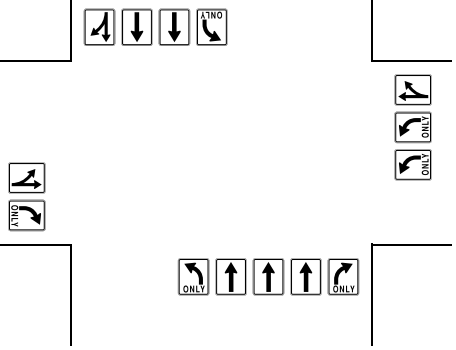

Evening Peak Hour 5:00-6:00 pm

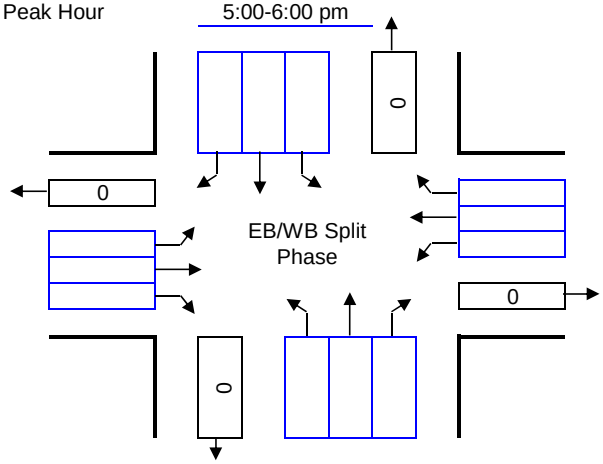

Right Turns Subtracted for Exclusive Right Turn Overlap Phasing or Right Turn on Red:

	AM	PM
NB Approach:	NB	NB
SB Approach:	SB	SB
EB Approach:	EB 76	EB
WB Approach:	WB	WB

Number of Lanes	Lane Use Factor		Opposing Volume (vph)		PCE
1 =	1.00	Congestion Standard	≤	199	1.1
2 =	0.53	= 1550	≤	599	2.0
3 =	0.37	for	≤	799	3.0
4 =	0.30	North Bethesda	≤	999	4.0
Dbl-left	0.60	Policy	≥	1000	5.0
		Area			

Movement	Volume	PCE	Lane Use Factor	Lane Volume	Opposing Lefts	Critical Lane Volume	*
NBT + SBL	2723	1.00	0.37	1008	184	1192	*
SBTR + NBL	2606	1.00	0.37	964	91	1055	
EBLT	68	1.00	1.00	68	0	68	*
WBL	585	1.00	0.60	351	0	351	*
					Critical Volume	1611	F
					V/C	1.04	

Movement	Volume	PCE	Lane Use Factor	Lane Volume	Opposing Lefts	Critical Lane Volume	*
					Critical Volume	0	OK
					V/C	0.00	

Maryland State Highway Administration
Turning Movement Summary and Level of Service

Count Date:
Conditions: Future
Design Year: 2042

Location: MD 355 @ Hubbard Dr.
Computed By: JB
Date: 3/28/14

Montgomery County Method

Morning Peak Hour 7:15-8:15 am

Lane Configuration

Evening Peak Hour 5:00-6:00 pm

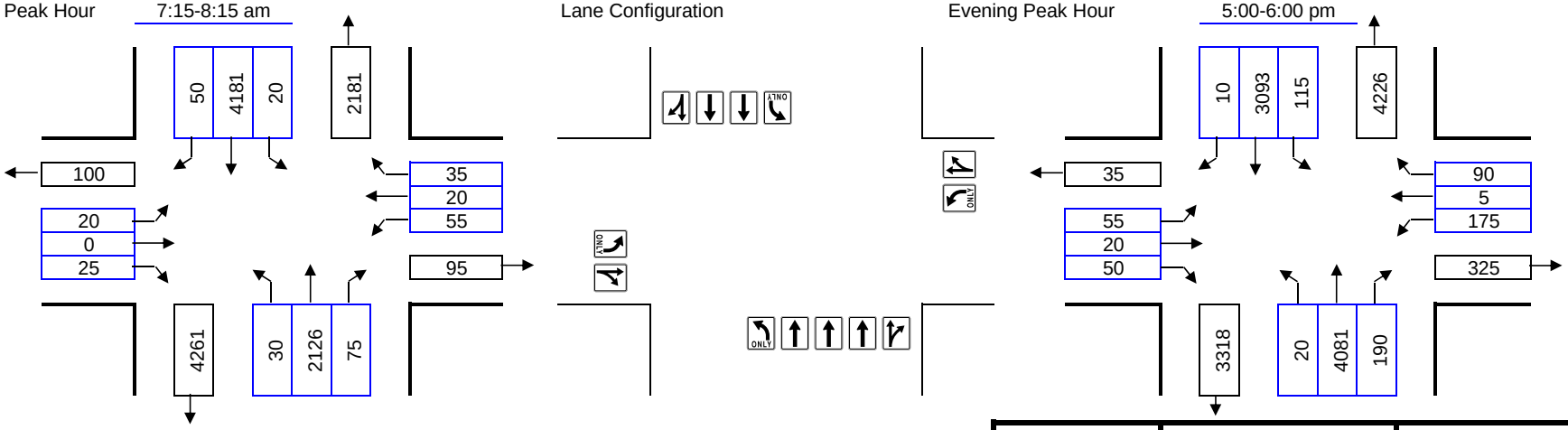

Right Turns Subtracted for Exclusive Right Turn Overlap Phasing or Right Turn on Red:

	AM	PM
NB Approach:	NB	NB
SB Approach:	SB	SB
EB Approach:	EB	EB
WB Approach:	WB	WB

Number of Lanes	Lane Use Factor		Opposing Volume (vph)		PCE
1 =	1.00	Congestion Standard	≤	199	1.1
2 =	0.53	= 1550	≤	599	2.0
3 =	0.37	for	≤	799	3.0
4 =	0.30	North Bethesda	≤	999	4.0
Dbl-left	0.60	Policy Area	≥	1000	5.0

Movement	Volume	PCE	Lane Use Factor	Lane Volume	Opposing Lefts	Critical Lane Volume	*
NBTR + SBL	2201	1.00	0.30	660	20	680	
SBTR + NBL	4231	1.00	0.37	1565	30	1595	*
EBTR + WBL	25	1.00	1.00	25	55	80	*
WBTR + EBL	55	1.00	1.00	55	20	75	
					Critical Volume	1675	F
					V/C	1.08	

Movement	Volume	PCE	Lane Use Factor	Lane Volume	Opposing Lefts	Critical Lane Volume	*
NBTR + SBL	4271	1.00	0.30	1281	115	1396	*
SBTR + NBL	3103	1.00	0.37	1148	20	1168	
EBTR + WBL	70	1.00	1.00	70	175	245	*
WBTR + EBL	95	1.00	1.00	95	55	150	
					Critical Volume	1641	F
					V/C	1.06	

Maryland State Highway Administration
Turning Movement Summary and
Level of Service

Count Date:
Conditions: Future SATURDAY
Design Year: 2042

Location: MD 355 @ Hubbard Dr.
Computed By: LL
Date: 3/28/14

Montgomery County Method

Morning Peak Hour 7:15-8:15 am

Lane Configuration

Evening Peak Hour 5:00-6:00 pm

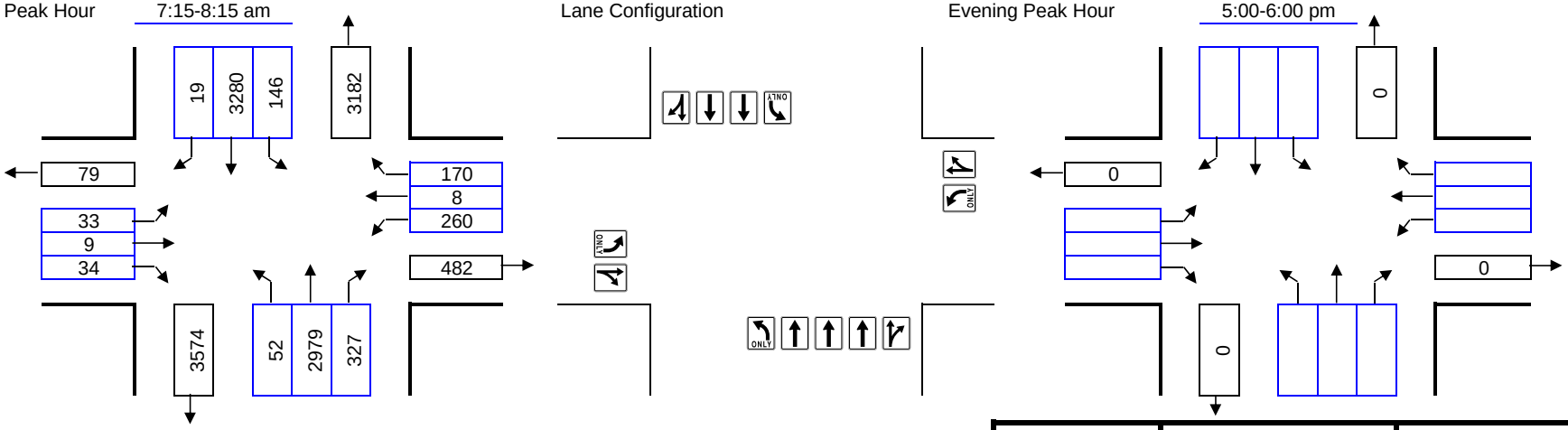

Right Turns Subtracted for Exclusive Right Turn Overlap Phasing or Right Turn on Red:

	AM	PM
NB Approach:	NB	NB
SB Approach:	SB	SB
EB Approach:	EB	EB
WB Approach:	WB	WB

Number of Lanes	Lane Use Factor		Opposing Volume (vph)		PCE
1 =	1.00	Congestion Standard	≤	199	1.1
2 =	0.53	= 1550	≤	599	2.0
3 =	0.37	for	≤	799	3.0
4 =	0.30	North Bethesda	≤	999	4.0
Dbl-left	0.60	Policy	≥	1000	5.0
		Area			

Movement	Volume	PCE	Lane Use Factor	Lane Volume	Opposing Lefts	Critical Lane Volume	*
NBTR + SBL	3306	1.00	0.30	992	146	1138	
SBTR + NBL	3299	1.00	0.37	1221	52	1273	*
EBTR + WBL	43	1.00	1.00	43	260	303	*
WBTR + EBL	178	1.00	1.00	178	33	211	
					Critical Volume	1576	F
						V/C	1.02

Movement	Volume	PCE	Lane Use Factor	Lane Volume	Opposing Lefts	Critical Lane Volume	*
					Critical Volume	0	OK
						V/C	0.00

Maryland State Highway Administration
Turning Movement Summary and
Level of Service

Count Date:
Conditions: Future
Design Year: 2042

Location: Montrose Pkwy. @ MD 355 NB On Ramp

Computed By: JB Date: 3/28/14

Montgomery County Method

Morning Peak Hour 7:15-8:15 am

Lane Configuration

Evening Peak Hour 5:00-6:00 pm

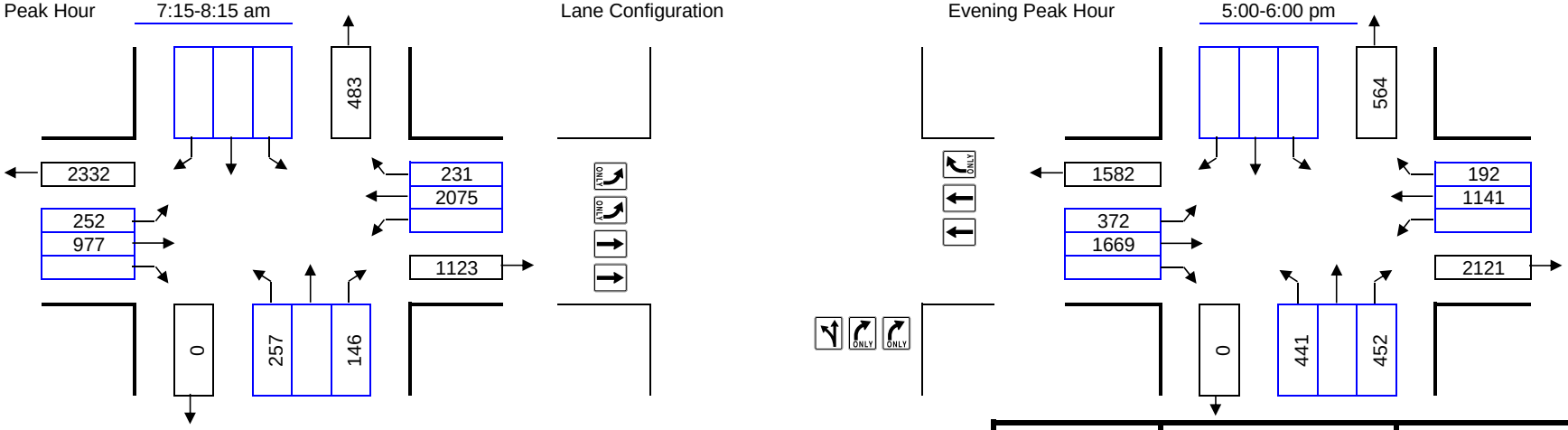

Right Turns Subtracted for Exclusive Right Turn Overlap Phasing or Right Turn on Red:

	AM	PM
NB Approach:	NB	NB
SB Approach:	SB	SB
EB Approach:	EB	EB
WB Approach:	WB	WB

Number of Lanes	Lane Use Factor		Opposing Volume (vph)		PCE
1 =	1.00	Congestion Standard	≤	199	1.1
2 =	0.53	= 1800	≤	599	2.0
3 =	0.37	for	≤	799	3.0
4 =	0.30	White Flint	≤	999	4.0
Dbl-left	0.60	Policy Area	≥	1000	5.0

Movement	Volume	PCE	Lane Use Factor	Lane Volume	Opposing Lefts	Critical Lane Volume	*
NBLT	257	1.00	1.00	257	0	257	*
EBT	977	1.00	0.53	518	0	518	
WBT + EBL	2075	1.00	0.53	1100	151	1251	*
					Critical Volume	1508	OK
						V/C	0.84

Movement	Volume	PCE	Lane Use Factor	Lane Volume	Opposing Lefts	Critical Lane Volume	*
NBLT	441	1.00	1.00	441	0	441	*
EBT	1669	1.00	0.53	885	0	885	*
WBT + EBL	1141	1.00	0.53	605	223	828	
					Critical Volume	1326	OK
						V/C	0.74

Maryland State Highway Administration
Turning Movement Summary and
Level of Service

Count Date:
Conditions: Future SATURDAY
Design Year: 2042

Location: Montrose Pkwy. @ MD 355 NB On Ramp
Computed By: LL
Date: 3/28/14

Montgomery County Method

Morning Peak Hour 7:15-8:15 am

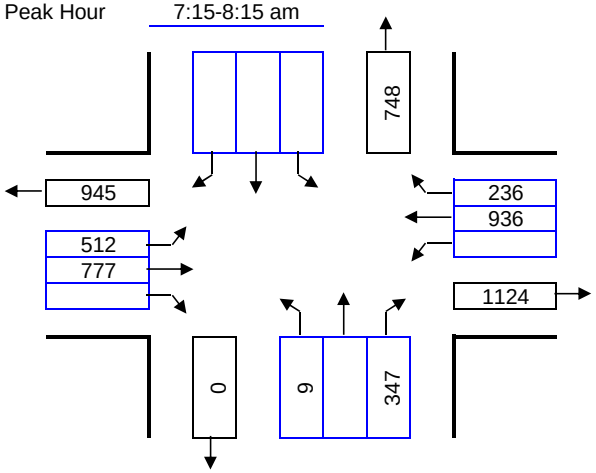

Lane Configuration

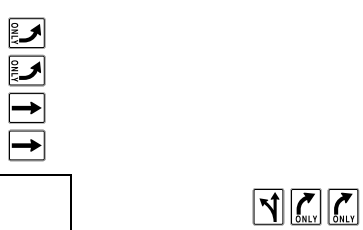

Evening Peak Hour 5:00-6:00 pm

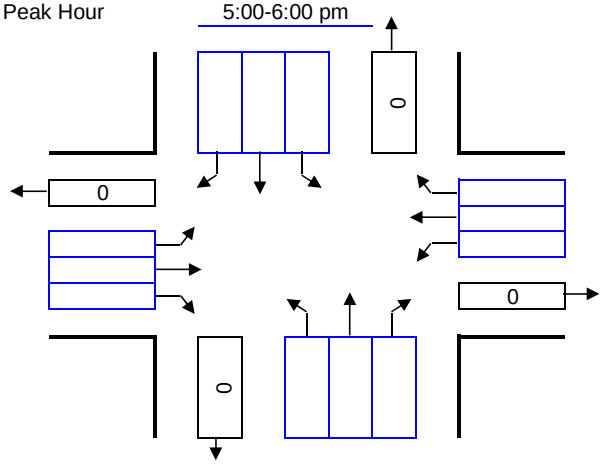

Right Turns Subtracted for Exclusive Right Turn Overlap Phasing or Right Turn on Red:

	AM	PM
NB Approach:	NB	NB
SB Approach:	SB	SB
EB Approach:	EB	EB
WB Approach:	WB	WB

Number of Lanes	Lane Use Factor		Opposing Volume (vph)		PCE
1 =	1.00	Congestion Standard	≤	199	1.1
2 =	0.53	= 1800	≤	599	2.0
3 =	0.37	for	≤	799	3.0
4 =	0.30	White Flint	≤	999	4.0
Dbl-left	0.60	Policy	≥	1000	5.0
		Area			

Movement	Volume	PCE	Lane Use Factor	Lane Volume	Opposing Lefts	Critical Lane Volume	*
NBR	347	1.00	0.53	184	0	184	*
EBT	777	1.00	0.53	412	0	412	
WBT + EBL	936	1.00	0.53	496	307	803	*
					Critical Volume	987	OK
						V/C	0.55

Movement	Volume	PCE	Lane Use Factor	Lane Volume	Opposing Lefts	Critical Lane Volume	*
					Critical Volume	0	OK
						V/C	0.00

Maryland State Highway Administration
Turning Movement Summary and
Level of Service

Count Date:
Conditions: Future
Design Year: 2042

Location: MD 355 @ Old Georgetown Road
Computed By: BJB
Date: 3/28/14

Montgomery County Method

Morning Peak Hour 7:15-8:15 am

Lane Configuration

Evening Peak Hour 5:00-6:00 pm

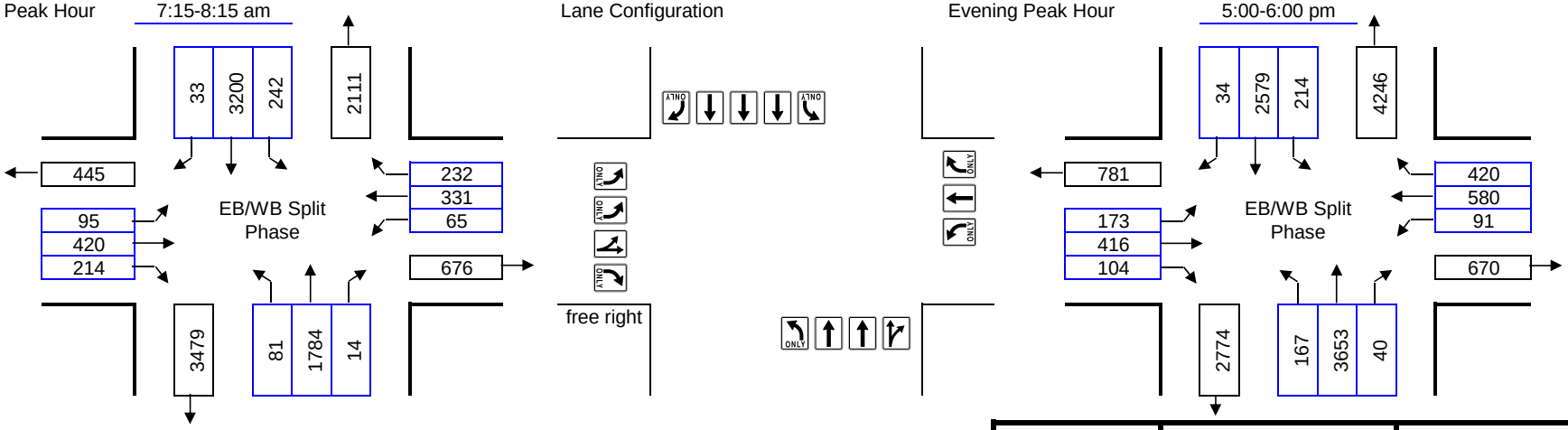

Right Turns Subtracted for Exclusive Right Turn Overlap Phasing or Right Turn on Red:

	AM	PM
NB Approach:	NB	NB
SB Approach:	SB	SB
EB Approach:	EB 214	EB
WB Approach:	WB	WB

Number of Lanes	Lane Use Factor		Opposing Volume (vph)		PCE
1 =	1.00	Congestion Standard	≤	199	1.1
2 =	0.53	= 1800	≤	599	2.0
3 =	0.37	for	≤	799	3.0
4 =	0.30	White Flint	≤	999	4.0
Dbl-left	0.60	Policy Area	≥	1000	5.0

Movement	Volume	PCE	Lane Use Factor	Lane Volume	Opposing Lefts	Critical Lane Volume	*
NBTR + SBL	1798	1.00	0.37	665	242	907	
SBT + NBL	3200	1.00	0.37	1184	81	1265	*
EBLT	515	1.00	0.37	191	0	191	*
WBT	331	1.00	1.00	331	0	331	*
					Critical Volume	1787	OK
					V/C	0.99	

Movement	Volume	PCE	Lane Use Factor	Lane Volume	Opposing Lefts	Critical Lane Volume	*
NBTR + SBL	3693	1.00	0.37	1366	214	1580	*
SBT + NBL	2579	1.00	0.37	954	167	1121	
EBLT	589	1.00	0.37	218	0	218	*
WBT	580	1.00	1.00	580	0	580	*
					Critical Volume	2378	F
					V/C	1.32	

Maryland State Highway Administration
Turning Movement Summary and
Level of Service

Count Date:
Conditions: Future SATURDAY
Design Year: 2042

Location: MD 355 @ Old Georgetown Road
Computed By: LL
Date: 3/28/14

Montgomery County Method

Morning Peak Hour 7:15-8:15 am

Lane Configuration

Evening Peak Hour 5:00-6:00 pm

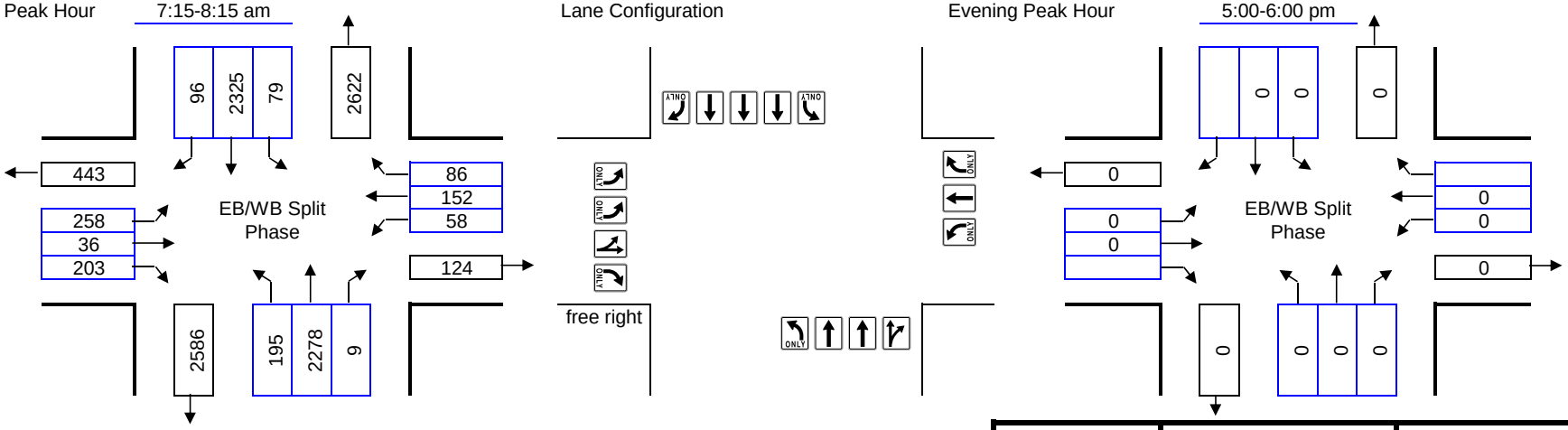

Right Turns Subtracted for Exclusive Right Turn Overlap Phasing or Right Turn on Red:

	AM	PM
NB Approach:	NB	NB
SB Approach:	SB	SB
EB Approach:	EB 203	EB
WB Approach:	WB	WB

Number of Lanes	Lane Use Factor		Opposing Volume (vph)		PCE
1 =	1.00	Congestion Standard	≤	199	1.1
2 =	0.53	= 1800	≤	599	2.0
3 =	0.37	for	≤	799	3.0
4 =	0.30	White Flint	≤	999	4.0
Dbl-left	0.60	Policy Area	≥	1000	5.0

Movement	Volume	PCE	Lane Use Factor	Lane Volume	Opposing Lefts	Critical Lane Volume	*
NBTR + SBL	2287	1.00	0.37	846	79	925	
SBT + NBL	2325	1.00	0.37	860	195	1055	*
EBLT	294	1.00	0.37	109	0	109	*
WBT	152	1.00	1.00	152	0	152	*
					Critical Volume	1316	OK
					V/C	0.73	

Movement	Volume	PCE	Lane Use Factor	Lane Volume	Opposing Lefts	Critical Lane Volume	*
					Critical Volume	0	OK
					V/C	0.00	

Maryland State Highway Administration
Turning Movement Summary and
Level of Service

Count Date:
Conditions: Future
Design Year: 2042

Location: MD 355 @ Marinelli Rd
Computed By: BJM
Date: 3/28/14

Montgomery County Method

Morning Peak Hour 7:00-8:00 am

Lane Configuration

Evening Peak Hour 5:00-6:00 pm

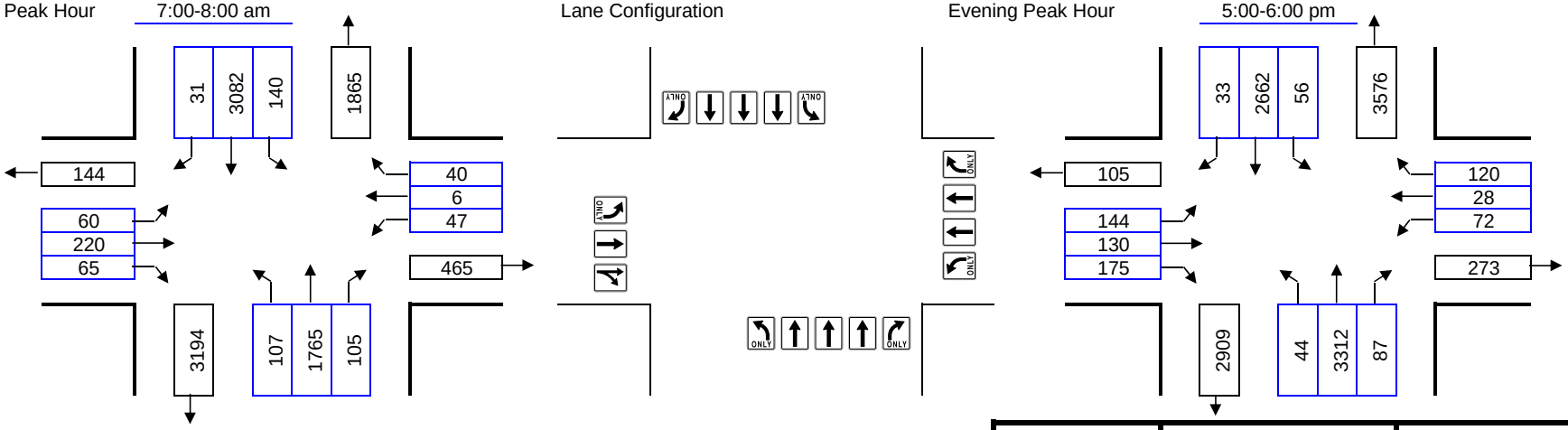

Right Turns Subtracted for Exclusive Right Turn Overlap Phasing or Right Turn on Red:

	AM	PM
NB Approach:	NB	NB
SB Approach:	SB	SB
EB Approach:	EB	EB
WB Approach:	WB	WB 56

Number of Lanes	Lane Use Factor		Opposing Volume (vph)		PCE
1 =	1.00	Congestion Standard	≤	199	1.1
2 =	0.53	= 1800	≤	599	2.0
3 =	0.37	for	≤	799	3.0
4 =	0.30	White Flint	≤	999	4.0
Dbl-left	0.60	Policy Area	≥	1000	5.0

Movement	Volume	PCE	Lane Use Factor	Lane Volume	Opposing Lefts	Critical Lane Volume	*
NBT + SBL	1765	1.00	0.37	653	140	793	
SBT + NBL	3082	1.00	0.37	1140	107	1247	*
EBTR + WBL	285	1.00	0.53	151	47	198	*
WBR + EBL	40	1.00	1.00	40	60	100	
					Critical Volume	1445	OK
					V/C	0.80	

Movement	Volume	PCE	Lane Use Factor	Lane Volume	Opposing Lefts	Critical Lane Volume	*
NBT + SBL	3312	1.00	0.37	1225	56	1281	*
SBT + NBL	2662	1.00	0.37	985	44	1029	
EBR + WBL	175	1.00	1.00	175	72	247	*
WBR + EBL	64	1.00	1.00	64	144	208	
					Critical Volume	1528	OK
					V/C	0.85	

De facto RT lane(s) assumed for EB approach.

Maryland State Highway Administration
Turning Movement Summary and
Level of Service

Count Date:
Conditions: Future SATURDAY
Design Year: 2042

Location: MD 355 @ Marinelli Rd
Computed By: LL
Date: 3/28/14

Montgomery County Method

Morning Peak Hour 7:00-8:00 am

Lane Configuration

Evening Peak Hour 5:00-6:00 pm

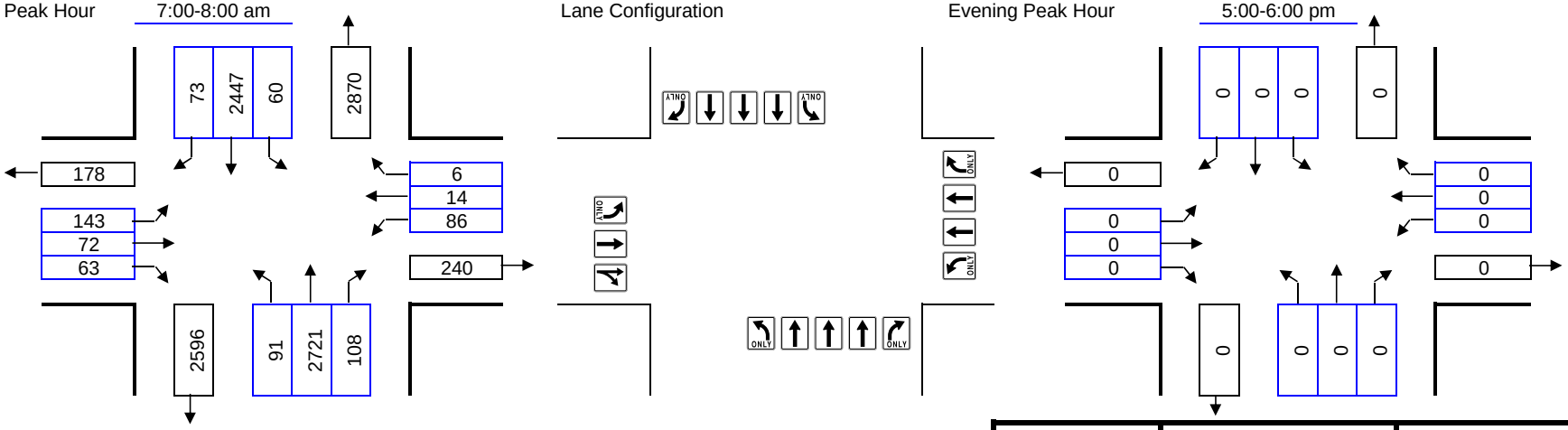

Right Turns Subtracted for Exclusive Right Turn Overlap Phasing or Right Turn on Red:

	AM	PM
NB Approach:	NB	NB
SB Approach:	SB	SB
EB Approach:	EB	EB
WB Approach:	WB	WB

Number of Lanes	Lane Use Factor		Opposing Volume (vph)		PCE
1 =	1.00	Congestion Standard	≤	199	1.1
2 =	0.53	= 1800	≤	599	2.0
3 =	0.37	for	≤	799	3.0
4 =	0.30	White Flint	≤	999	4.0
Dbl-left	0.60	Policy	≥	1000	5.0
		Area			

Movement	Volume	PCE	Lane Use Factor	Lane Volume	Opposing Lefts	Critical Lane Volume	*
NBT + SBL	2721	1.00	0.37	1007	60	1067	*
SBT + NBL	2447	1.00	0.37	905	91	996	
EBTR + WBL	135	1.00	0.53	72	86	158	*
WBT + EBL	14	1.00	0.53	7	143	150	
					Critical Volume	1225	OK
					V/C	0.68	

Movement	Volume	PCE	Lane Use Factor	Lane Volume	Opposing Lefts	Critical Lane Volume	*
					Critical Volume	0	OK
					V/C	0.00	

Maryland State Highway Administration
Turning Movement Summary and
Level of Service

Count Date:
Conditions: Future
Design Year: 2042

Location: MD 355 @ Nicholson Ln.
Computed By: BJM
Date: 3/28/14

Montgomery County Method

Morning Peak Hour 7:00-8:00 am

Lane Configuration

Evening Peak Hour 5:00-6:00 pm

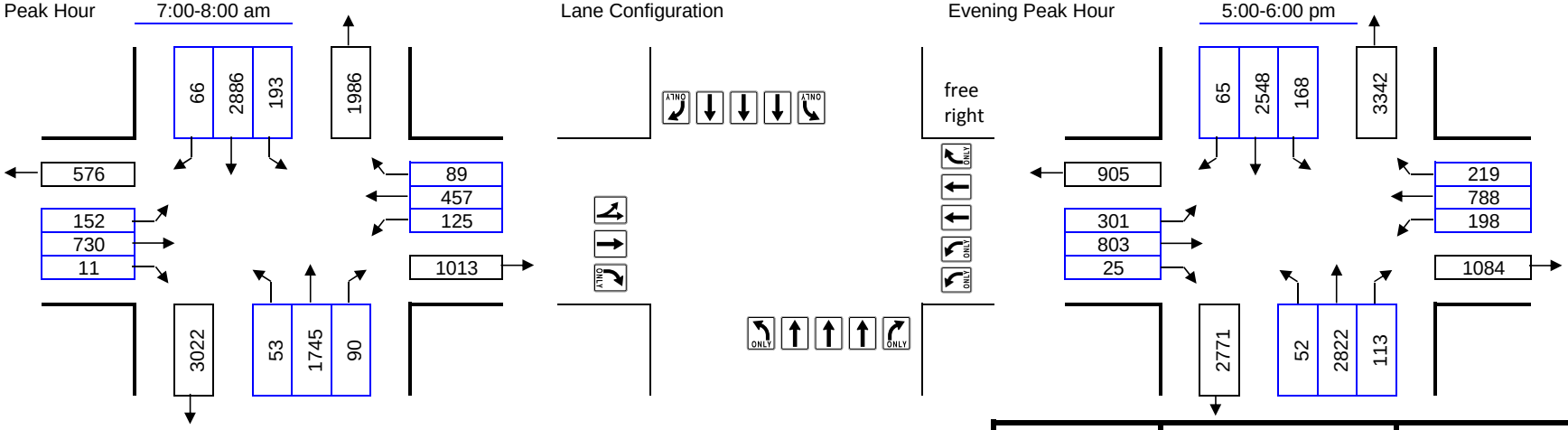

Right Turns Subtracted for Exclusive Right Turn Overlap Phasing or Right Turn on Red:

	AM	PM
NB Approach:	NB	NB
SB Approach:	SB	SB
EB Approach:	EB	EB
WB Approach:	WB	WB

Number of Lanes	Lane Use Factor		Opposing Volume (vph)		PCE
1 =	1.00	Congestion Standard	≤	199	1.1
2 =	0.53	= 1800	≤	599	2.0
3 =	0.37	for	≤	799	3.0
4 =	0.30	White Flint	≤	999	4.0
Dbl-left	0.60	Policy Area	≥	1000	5.0

Movement	Volume	PCE	Lane Use Factor	Lane Volume	Opposing Lefts	Critical Lane Volume	*
NBT + SBL	1745	1.00	0.37	646	193	839	
SBT + NBL	2886	1.00	0.37	1068	53	1121	*
EBLT + WBL	882	1.00	0.53	467	75	542	*
WBT + EBL	457	1.00	0.53	242	152	394	
					Critical Volume	1663	OK
						V/C	0.92

Movement	Volume	PCE	Lane Use Factor	Lane Volume	Opposing Lefts	Critical Lane Volume	*
NBT + SBL	2822	1.00	0.37	1044	168	1212	*
SBT + NBL	2548	1.00	0.37	943	52	995	
EBT + WBL	1104	1.00	1.00	1104	119	1223	*
WBT + EBL	788	1.00	0.53	418	301	719	
					Critical Volume	2435	F
						V/C	1.35

De facto LT lane(s) assumed for EB approach.

Maryland State Highway Administration
Turning Movement Summary and
Level of Service

Count Date:
Conditions: Future SATURDAY
Design Year: 2042

Location: MD 355 @ Nicholson Ln
Computed By: LL
Date: 3/28/14

Montgomery County Method

Morning Peak Hour 7:00-8:00 am

Lane Configuration

Evening Peak Hour 5:00-6:00 pm

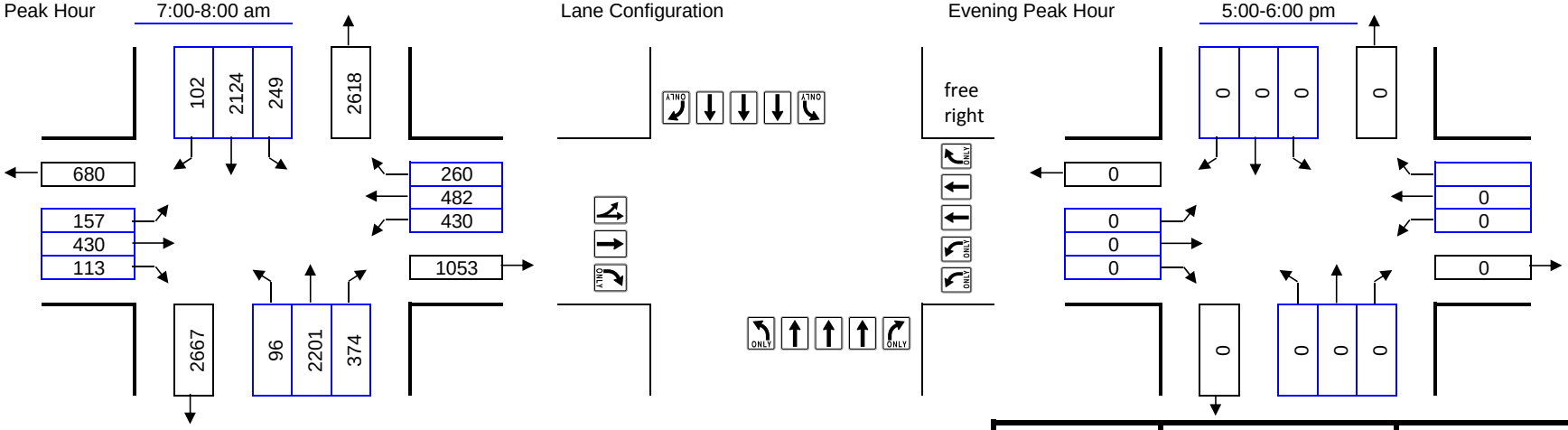

Right Turns Subtracted for Exclusive Right Turn Overlap Phasing or Right Turn on Red:

	AM	PM
NB Approach:	NB	NB
SB Approach:	SB	SB
EB Approach:	EB	EB
WB Approach:	WB	WB

Number of Lanes	Lane Use Factor		Opposing Volume (vph)		PCE
1 =	1.00	Congestion Standard	≤	199	1.1
2 =	0.53	= 1800	≤	599	2.0
3 =	0.37	for	≤	799	3.0
4 =	0.30	White Flint	≤	999	4.0
Dbl-left	0.60	Policy Area	≥	1000	5.0

Movement	Volume	PCE	Lane Use Factor	Lane Volume	Opposing Lefts	Critical Lane Volume	*
NBT + SBL	2201	1.00	0.37	814	249	1063	*
SBT + NBL	2124	1.00	0.37	786	96	882	
EBLT + WBL	587	1.00	0.53	311	258	569	*
WBR + EBL	260	1.00	1.00	260	157	417	
					Critical Volume	1632	OK
					V/C	0.91	

Movement	Volume	PCE	Lane Use Factor	Lane Volume	Opposing Lefts	Critical Lane Volume	*
					Critical Volume	0	OK
					V/C	0.00	

Maryland State Highway Administration
Turning Movement Summary and
Level of Service

Count Date:
Conditions: Future
Design Year: 2042

Location: MD 355 @ Security La.
Computed By: BJM
Date: 3/28/14

Montgomery County Method

Morning Peak Hour 7:15-8:15 am

Lane Configuration

Evening Peak Hour 5:00-6:00 pm

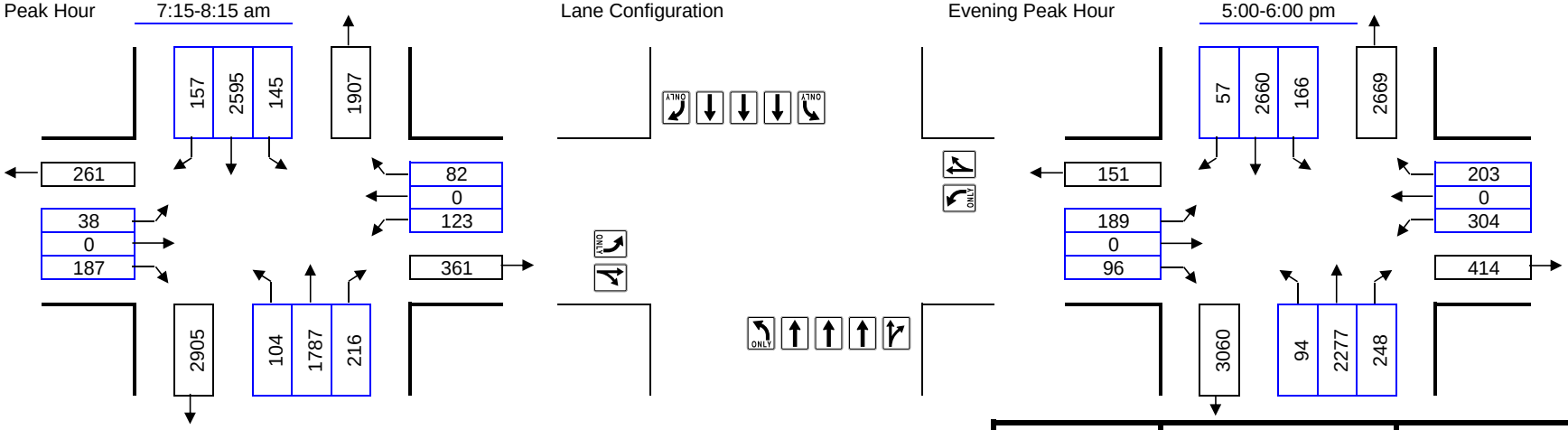

Right Turns Subtracted for Exclusive Right Turn Overlap Phasing or Right Turn on Red:

	AM	PM
NB Approach:	NB	NB
SB Approach:	SB	SB
EB Approach:	EB	EB
WB Approach:	WB	WB

Number of Lanes	Lane Use Factor		Opposing Volume (vph)		PCE
1 =	1.00	Congestion Standard	≤	199	1.1
2 =	0.53	= 1800	≤	599	2.0
3 =	0.37	for	≤	799	3.0
4 =	0.30	White Flint	≤	999	4.0
Dbl-left	0.60	Policy Area	≥	1000	5.0

Movement	Volume	PCE	Lane Use Factor	Lane Volume	Opposing Lefts	Critical Lane Volume	*
NBTR + SBL	2003	1.00	0.30	601	145	746	
SBT + NBL	2595	1.00	0.37	960	104	1064	*
EBTR + WBL	187	1.00	1.00	187	123	310	*
WBTR + EBL	82	1.00	1.00	82	38	120	
					Critical Volume	1374	OK
					V/C	0.76	

Movement	Volume	PCE	Lane Use Factor	Lane Volume	Opposing Lefts	Critical Lane Volume	*
NBTR + SBL	2525	1.00	0.30	758	166	924	
SBT + NBL	2660	1.00	0.37	984	94	1078	*
EBTR + WBL	96	1.00	1.00	96	304	400	*
WBTR + EBL	203	1.00	1.00	203	189	392	
					Critical Volume	1478	OK
					V/C	0.82	

Maryland State Highway Administration
Turning Movement Summary and
Level of Service

Count Date:
Conditions: Future SATURDAY
Design Year: 2042

Location: MD 355 @ Security La.
Computed By: LL
Date: 3/28/14

Montgomery County Method

Morning Peak Hour 7:15-8:15 am

Lane Configuration

Evening Peak Hour 5:00-6:00 pm

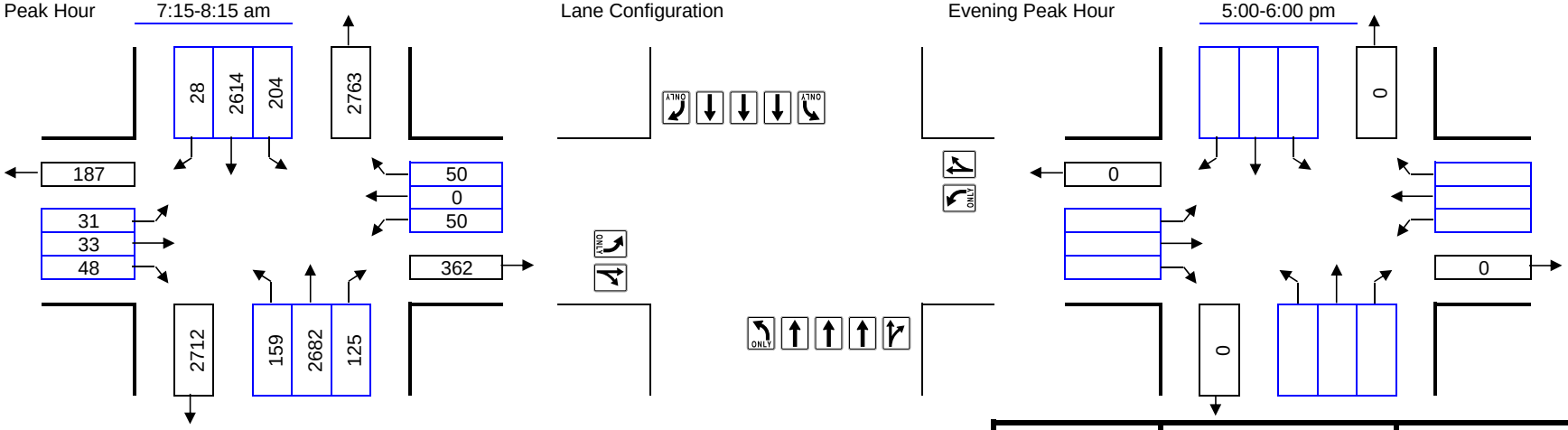

Right Turns Subtracted for Exclusive Right Turn Overlap Phasing or Right Turn on Red:

	AM	PM
NB Approach:	NB	NB
SB Approach:	SB	SB
EB Approach:	EB	EB
WB Approach:	WB	WB

Number of Lanes	Lane Use Factor		Opposing Volume (vph)		PCE
1 =	1.00	Congestion Standard	≤	199	1.1
2 =	0.53	= 1800	≤	599	2.0
3 =	0.37	for	≤	799	3.0
4 =	0.30	White Flint	≤	999	4.0
Dbl-left	0.60	Policy Area	≥	1000	5.0

Movement	Volume	PCE	Lane Use Factor	Lane Volume	Opposing Lefts	Critical Lane Volume	*
NBTR + SBL	2807	1.00	0.30	842	204	1046	
SBT + NBL	2614	1.00	0.37	967	159	1126	*
EBTR + WBL	81	1.00	1.00	81	50	131	*
WBTR + EBL	50	1.00	1.00	50	31	81	
					Critical Volume	1257	OK
					V/C	0.70	

Movement	Volume	PCE	Lane Use Factor	Lane Volume	Opposing Lefts	Critical Lane Volume	*
					Critical Volume	0	OK
					V/C	0.00	

Maryland State Highway Administration
Turning Movement Summary and
Level of Service

Count Date:
Conditions: Future
Design Year: 2042

Location: MD 355 @ Edson Ln
Computed By: BJM
Date: 4/4/14

Montgomery County Method

Morning Peak Hour 7:15-8:15 am

Lane Configuration

Evening Peak Hour 5:00-6:00 pm

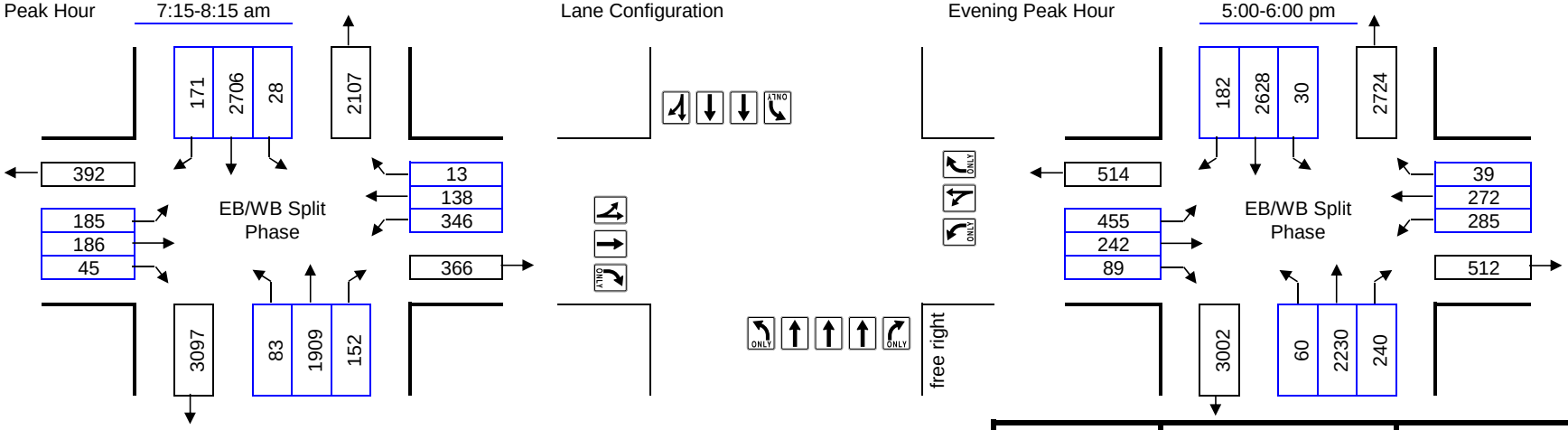

Right Turns Subtracted for Exclusive Right Turn Overlap Phasing or Right Turn on Red:

	AM	PM
NB Approach:	NB	NB
SB Approach:	SB	SB
EB Approach:	EB	EB
WB Approach:	WB	WB

Number of Lanes	Lane Use Factor		Opposing Volume (vph)		PCE
1 =	1.00	Congestion Standard	≤	199	1.1
2 =	0.53	= 1800	≤	599	2.0
3 =	0.37	for	≤	799	3.0
4 =	0.30	White Flint	≤	999	4.0
Dbl-left	0.60	Policy Area	≥	1000	5.0

Movement	Volume	PCE	Lane Use Factor	Lane Volume	Opposing Lefts	Critical Lane Volume	*
NBT + SBL	1909	1.00	0.37	706	28	734	
SBTR + NBL	2877	1.00	0.37	1064	83	1147	*
EBLT	371	1.00	0.53	197	0	197	*
WBLT	484	1.00	0.60	290	0	290	*
					Critical Volume	1634	OK
					V/C	0.91	

Movement	Volume	PCE	Lane Use Factor	Lane Volume	Opposing Lefts	Critical Lane Volume	*
NBT + SBL	2230	1.00	0.37	825	30	855	
SBTR + NBL	2810	1.00	0.37	1040	60	1100	*
EBL	455	1.00	1.00	455	0	455	*
WBLT	557	1.00	0.60	334	0	334	*
					Critical Volume	1889	F
					V/C	1.05	

De facto LT lane(s) assumed for EB approach.

Maryland State Highway Administration
Turning Movement Summary and
Level of Service

Count Date:
Conditions: Future SATURDAY
Design Year: 2042

Location: MD 355 @ Edson La.
Computed By: LL
Date: 4/7/14

Montgomery County Method

Morning Peak Hour 7:15-8:15 am

Lane Configuration

Evening Peak Hour 5:00-6:00 pm

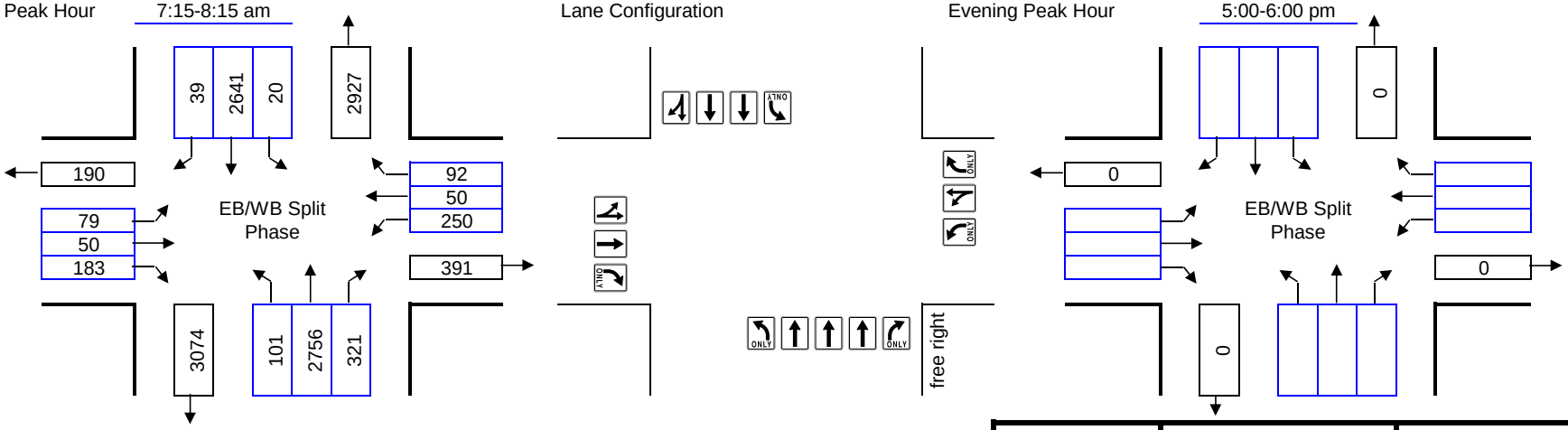

Right Turns Subtracted for Exclusive Right Turn Overlap Phasing or Right Turn on Red:

	AM		PM	
NB Approach:	NB		NB	
SB Approach:	SB		SB	
EB Approach:	EB	101	EB	
WB Approach:	WB		WB	

Number of Lanes	Lane Use Factor		Opposing Volume (vph)		PCE
1 =	1.00	Congestion Standard	≤	199	1.1
2 =	0.53	= 1800	≤	599	2.0
3 =	0.37	for	≤	799	3.0
4 =	0.30	White Flint	≤	999	4.0
Dbl-left	0.60	Policy	≥	1000	5.0
		Area			

Movement	Volume	PCE	Lane Use Factor	Lane Volume	Opposing Lefts	Critical Lane Volume	*
NBT + SBL	2756	1.00	0.37	1020	20	1040	
SBTR + NBL	2680	1.00	0.37	992	101	1093	*
EBR	82	1.00	1.00	82	0	82	*
WBLT	300	1.00	0.60	180	0	180	*
					Critical Volume	1355	OK
					V/C	0.75	

De facto LT lane(s) assumed for EB approach.

Movement	Volume	PCE	Lane Use Factor	Lane Volume	Opposing Lefts	Critical Lane Volume	*
					Critical Volume	0	OK
					V/C	0.00	

Maryland State Highway Administration
Turning Movement Summary and
Level of Service

Count Date:
Conditions: Future
Design Year: 2042

Location: MD 355 @ MD 547
Computed By: BJM
Date: 3/28/14

Montgomery County Method

Morning Peak Hour 7:00-8:00 am

Lane Configuration

Evening Peak Hour 5:00-6:00 pm

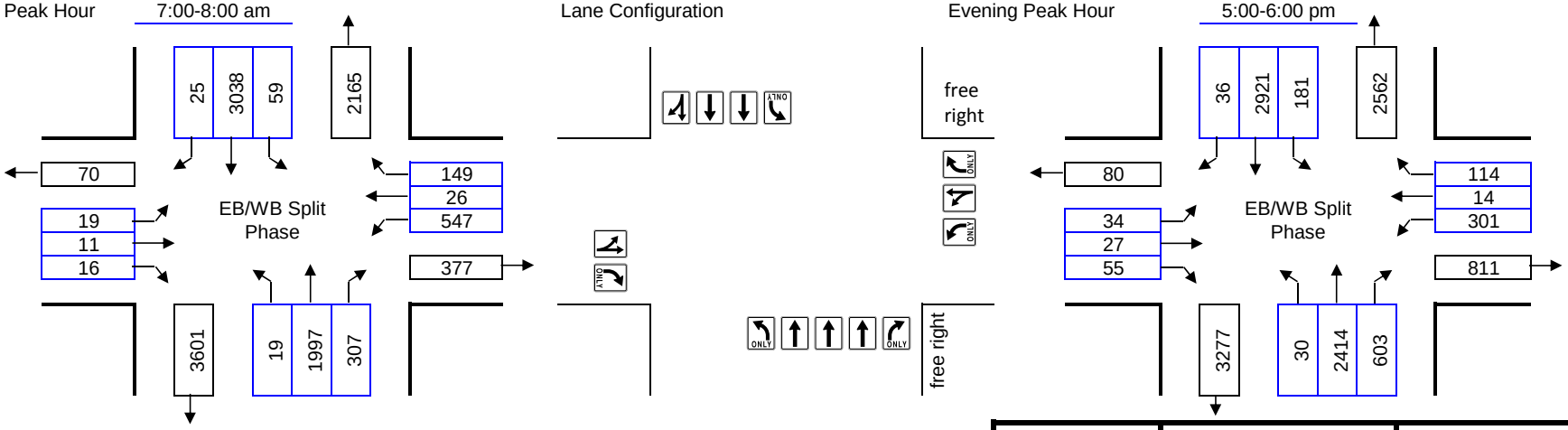

Right Turns Subtracted for Exclusive Right Turn Overlap Phasing or Right Turn on Red:

	AM	PM
NB Approach:	NB	NB
SB Approach:	SB	SB
EB Approach:	EB	EB
WB Approach:	WB	WB

Number of Lanes	Lane Use Factor		Opposing Volume (vph)		PCE
1 =	1.00	Congestion Standard	≤	199	1.1
2 =	0.53	= 1800	≤	599	2.0
3 =	0.37	for	≤	799	3.0
4 =	0.30	Grosvenor	≤	999	4.0
Dbl-left	0.60	Policy Area	≥	1000	5.0

Movement	Volume	PCE	Lane Use Factor	Lane Volume	Opposing Lefts	Critical Lane Volume	*
NBT + SBL	1997	1.00	0.37	739	59	798	
SBTR + NBL	3063	1.00	0.37	1133	19	1152	*
EBLT	30	1.00	1.00	30	0	30	*
WBLT	573	1.00	0.60	344	0	344	*
					Critical Volume	1526	OK
					V/C	0.85	

Movement	Volume	PCE	Lane Use Factor	Lane Volume	Opposing Lefts	Critical Lane Volume	*
NBT + SBL	2414	1.00	0.37	893	181	1074	
SBTR + NBL	2957	1.00	0.37	1094	30	1124	*
EBLT	61	1.00	1.00	61	0	61	*
WBLT	315	1.00	0.60	189	0	189	*
					Critical Volume	1374	OK
					V/C	0.76	

Maryland State Highway Administration
Turning Movement Summary and
Level of Service

SHA

Count Date:
Conditions: Future SATURDAY
Design Year: 2042

Location: MD 355 @ MD 547
Computed By: LL
Date: 3/28/14

Montgomery County Method

Morning Peak Hour 7:00-8:00 am

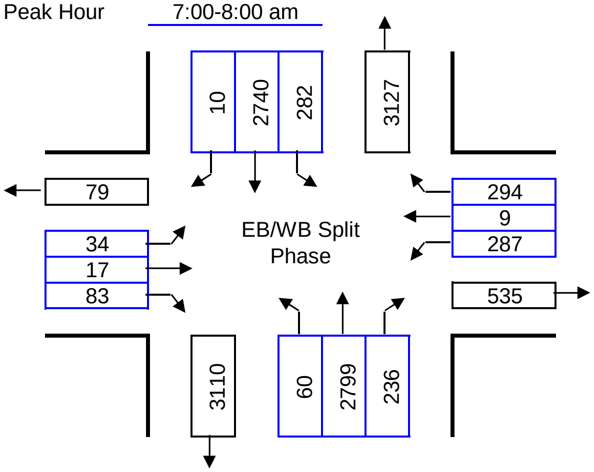

Lane Configuration

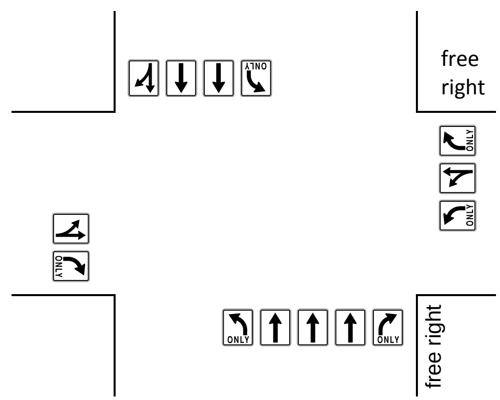

Evening Peak Hour 5:00-6:00 pm

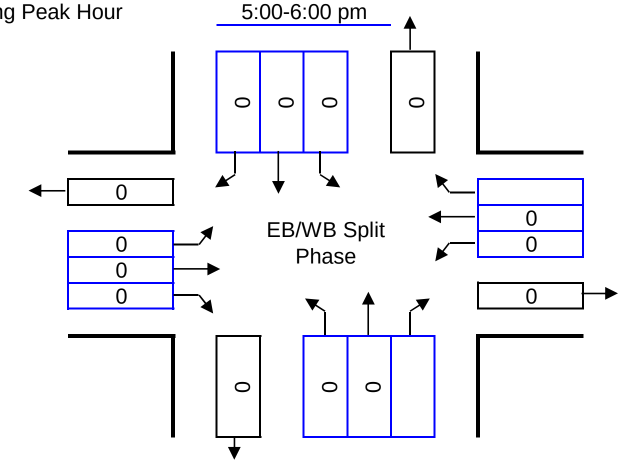

Right Turns Subtracted for Exclusive Right Turn Overlap Phasing or Right Turn on Red:

	AM		PM	
NB Approach:	NB		NB	
SB Approach:	SB		SB	
EB Approach:	EB	60	EB	
WB Approach:	WB	294	WB	

Number of Lanes	Lane Use Factor
1 =	1.00
2 =	0.53
3 =	0.37
4 =	0.30
Dbl-left	0.60

Congestion Standard = 1800 for Grosvenor Policy Area

	Opposing Volume (vph)	PCE
≤	199	1.1
≤	599	2.0
≤	799	3.0
≤	999	4.0
≥	1000	5.0

Movement	Volume	PCE	Lane Use Factor	Lane Volume	Opposing Lefts	Critical Lane Volume	*
NBT + SBL	2799	1.00	0.37	1036	282	1318	*
SBTR + NBL	2750	1.00	0.37	1018	60	1078	
EBLT	51	1.00	1.00	51	0	51	*
WBLT	296	1.00	0.60	178	0	178	*
					Critical Volume	1547	OK
					V/C	0.86	

Movement	Volume	PCE	Lane Use Factor	Lane Volume	Opposing Lefts	Critical Lane Volume	*
					Critical Volume	0	OK
					V/C	0.00	

Maryland State Highway Administration
Turning Movement Summary and
Level of Service

Count Date:
Conditions: Future
Design Year: 2042

Location: MD 355 @ Tuckerman Ln
Computed By: BJM
Date: 3/28/14

Montgomery County Method

Morning Peak Hour 7:00-8:00 am

Lane Configuration

Evening Peak Hour 5:00-6:00 pm

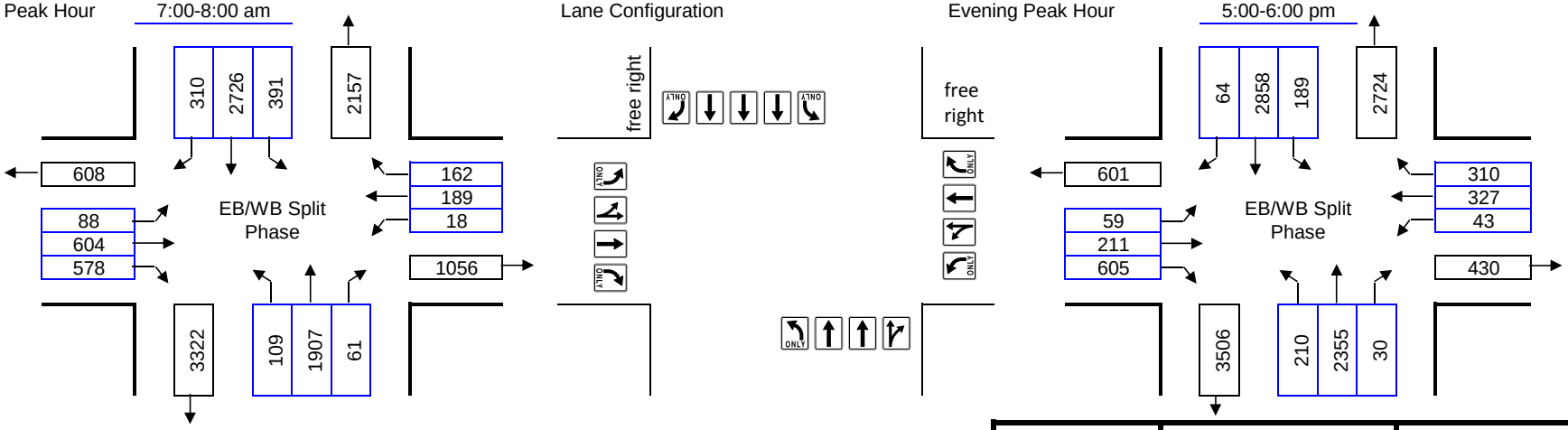

Right Turns Subtracted for Exclusive Right Turn Overlap Phasing or Right Turn on Red:

	AM		PM	
NB Approach:	NB		NB	
SB Approach:	SB		SB	
EB Approach:	EB	109	EB	206
WB Approach:	WB	162	WB	310

Number of Lanes	Lane Use Factor		Opposing Volume (vph)		PCE
1 =	1.00	Congestion Standard	≤	199	1.1
2 =	0.53	= 1800	≤	599	2.0
3 =	0.37	for	≤	799	3.0
4 =	0.30	Grosvenor	≤	999	4.0
Dbl-left	0.60	Policy Area	≥	1000	5.0

Movement	Volume	PCE	Lane Use Factor	Lane Volume	Opposing Lefts	Critical Lane Volume	*
NBTR + SBL	1968	1.00	0.37	728	391	1119	*
SBT + NBL	2726	1.00	0.37	1009	109	1118	
EBR	469	1.00	1.00	469	0	469	*
WBLT	189	1.00	0.53	100	0	100	*
					Critical Volume	1688	OK
					V/C	0.94	

De facto LT lane(s) assumed for EB approach. De facto through lane(s) assumed for WB approach.

Movement	Volume	PCE	Lane Use Factor	Lane Volume	Opposing Lefts	Critical Lane Volume	*
NBTR + SBL	2385	1.00	0.37	882	189	1071	
SBT + NBL	2858	1.00	0.37	1057	210	1267	*
EBR	399	1.00	1.00	399	0	399	*
WBLT	327	1.00	0.53	173	0	173	*
					Critical Volume	1839	F
					V/C	1.02	

De facto through lane(s) assumed for EB and WB approaches.

Maryland State Highway Administration
Turning Movement Summary and
Level of Service

Count Date:
Conditions: Future SATURDAY
Design Year: 2042

Location: MD 355 @ Tuckerman Ln
Computed By: LL
Date: 3/28/14

Montgomery County Method

Morning Peak Hour 7:00-8:00 am

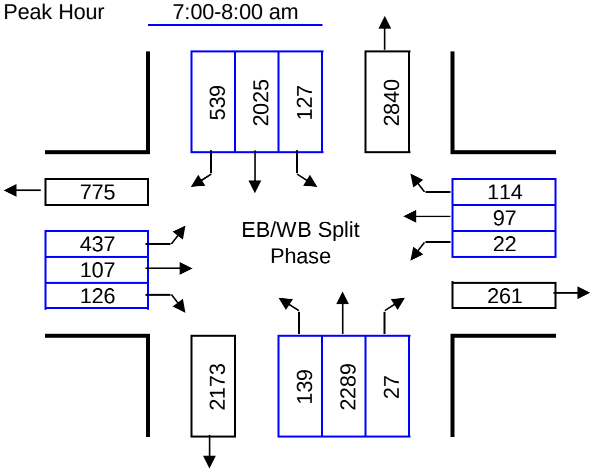

Lane Configuration

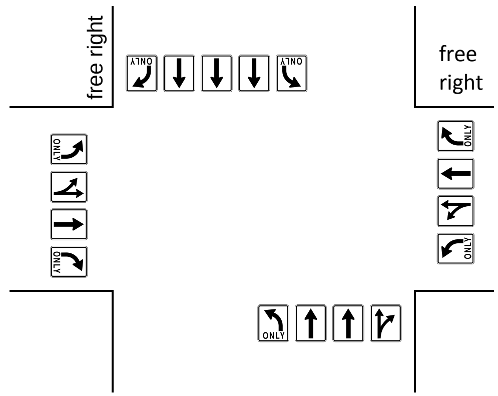

Evening Peak Hour 5:00-6:00 pm

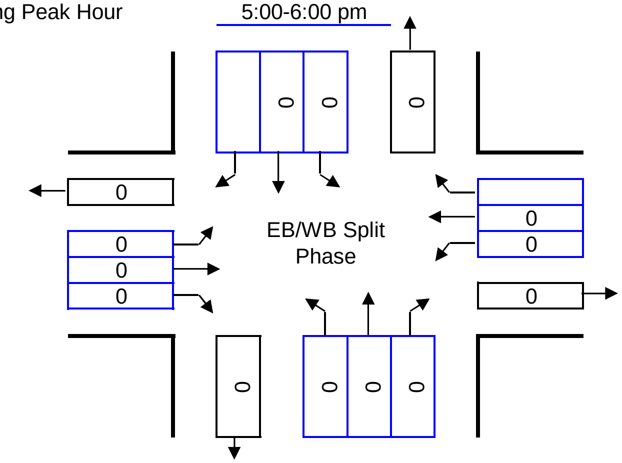

Right Turns Subtracted for Exclusive Right Turn Overlap Phasing or Right Turn on Red:

NB Approach:	AM NB		PM NB	
SB Approach:	SB		SB	
EB Approach:	EB		EB	
WB Approach:	WB	114	WB	

Number of Lanes	Lane Use Factor
1 =	1.00
2 =	0.53
3 =	0.37
4 =	0.30
Dbl-left	0.60

Congestion Standard = 1800 for Grosvenor Policy Area

Opposing Volume (vph)		PCE
≤	199	1.1
≤	599	2.0
≤	799	3.0
≤	999	4.0
≥	1000	5.0

Movement	Volume	PCE	Lane Use Factor	Lane Volume	Opposing Lefts	Critical Lane Volume	*
NBTR + SBL	2316	1.00	0.37	857	127	984	*
SBT + NBL	2025	1.00	0.37	749	139	888	
EBL	437	1.00	0.60	262	0	262	*
WBLT	97	1.00	0.53	51	0	51	*
					Critical Volume	1297	OK
					V/C	0.72	

De facto LT lane(s) assumed for EB approach. De facto through lane(s) assumed for WB approach.

Movement	Volume	PCE	Lane Use Factor	Lane Volume	Opposing Lefts	Critical Lane Volume	*
					Critical Volume	0	OK
					V/C	0.00	

Maryland State Highway Administration
Turning Movement Summary and
Level of Service

Count Date:
Conditions: Future
Design Year: 2042

Location: Montrose Rd. @ Montrose Pkwy
Computed By: BJM
Date: 3/28/14

Montgomery County Method

Morning Peak Hour 7:15-8:15 am

Lane Configuration

Evening Peak Hour 5:00-6:00 pm

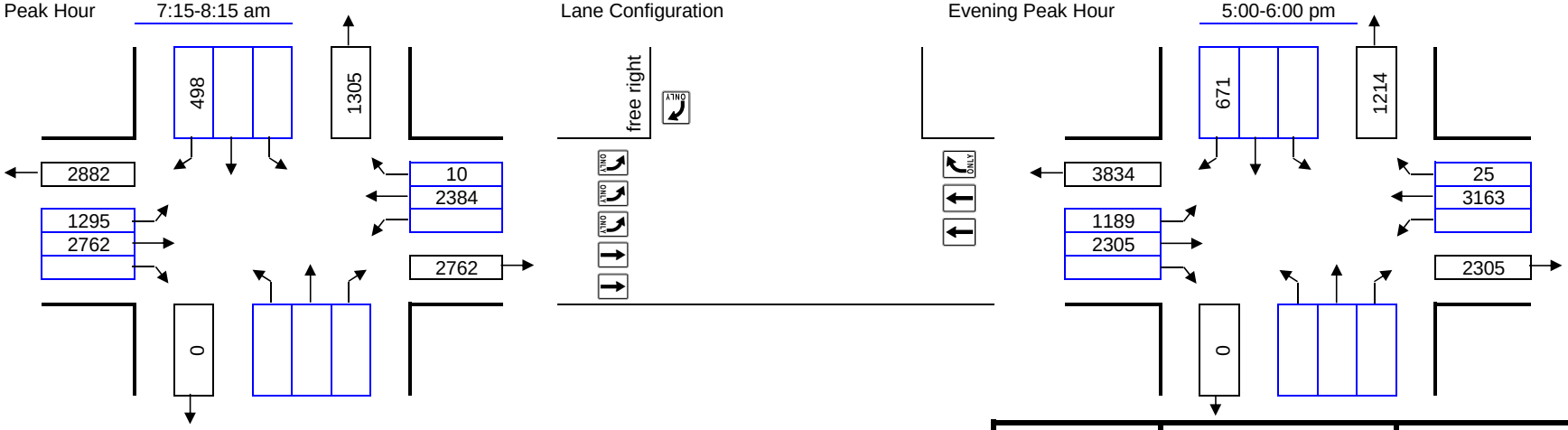

Right Turns Subtracted for Exclusive Right Turn Overlap Phasing or Right Turn on Red:

	AM		PM	
NB Approach:	NB		NB	
SB Approach:	SB	498	SB	671
EB Approach:	EB		EB	
WB Approach:	WB		WB	

Number of Lanes	Lane Use Factor		Opposing Volume (vph)		PCE
1 =	1.00	Congestion Standard	≤	199	1.1
2 =	0.53	= 1550	≤	599	2.0
3 =	0.37	for	≤	799	3.0
4 =	0.30	North Bethesda	≤	999	4.0
Dbl-left	0.60	Policy	≥	1000	5.0
		Area			

Movement	Volume	PCE	Lane Use Factor	Lane Volume	Opposing Lefts	Critical Lane Volume	*
SBR	0	1.00	1.00	0	0	0	
EBT	2762	1.00	0.53	1464	0	1464	
WBT + EBL	2384	1.00	0.53	1264	518	1782	*
					Critical Volume	1782	F
					V/C	1.15	

Movement	Volume	PCE	Lane Use Factor	Lane Volume	Opposing Lefts	Critical Lane Volume	*
SBR	0	1.00	1.00	0	0	0	
EBT	2305	1.00	0.53	1222	0	1222	
WBT + EBL	3163	1.00	0.53	1676	476	2152	*
					Critical Volume	2152	F
					V/C	1.39	

Maryland State Highway Administration
Turning Movement Summary and
Level of Service

Count Date:
Conditions: Future SATURDAY
Design Year: 2042

Location: Montrose Rd. @ Montrose Pkwy
Computed By: LL
Date: 3/28/14

Montgomery County Method

Morning Peak Hour 7:15-8:15 am

Lane Configuration

Evening Peak Hour 5:00-6:00 pm

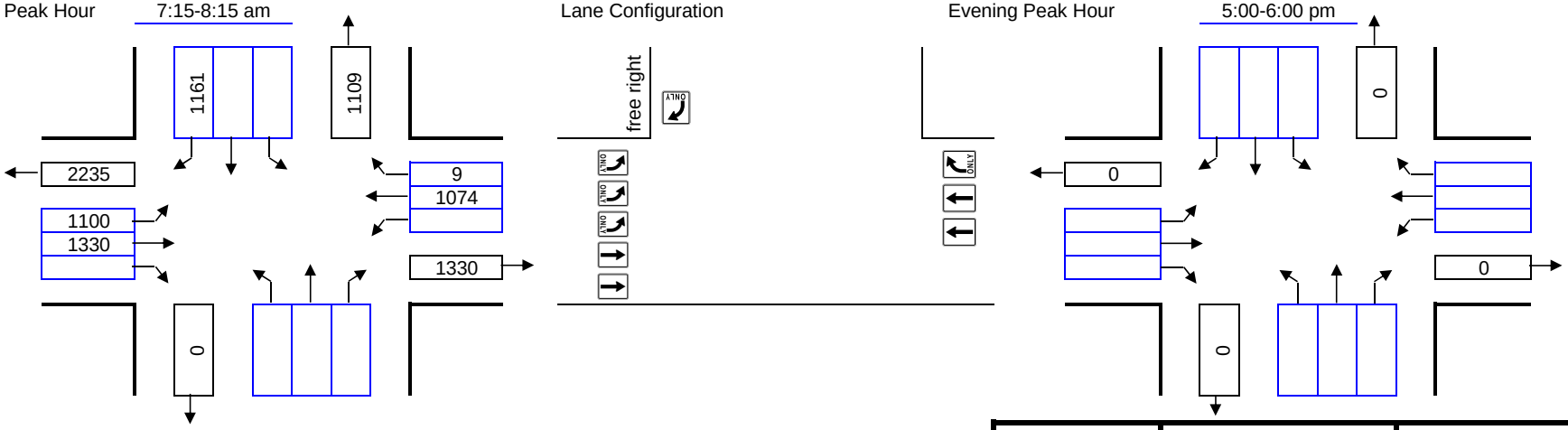

Right Turns Subtracted for Exclusive Right Turn Overlap Phasing or Right Turn on Red:

	AM		PM	
NB Approach:	NB		NB	
SB Approach:	SB	1161	SB	
EB Approach:	EB		EB	
WB Approach:	WB		WB	

Number of Lanes	Lane Use Factor		Opposing Volume (vph)		PCE
1 =	1.00	Congestion Standard	≤	199	1.1
2 =	0.53	= 1550	≤	599	2.0
3 =	0.37	for	≤	799	3.0
4 =	0.30	North Bethesda	≤	999	4.0
Dbl-left	0.60	Policy	≥	1000	5.0
		Area			

Movement	Volume	PCE	Lane Use Factor	Lane Volume	Opposing Lefts	Critical Lane Volume	*
SBR	0	1.00	1.00	0	0	0	
EBT	1330	1.00	0.53	705	0	705	
WBT + EBL	1074	1.00	0.53	569	440	1009	*
					Critical Volume	1009	OK
					V/C	0.65	

Movement	Volume	PCE	Lane Use Factor	Lane Volume	Opposing Lefts	Critical Lane Volume	*
					Critical Volume	0	OK
					V/C	0.00	

Maryland State Highway Administration
Turning Movement Summary and
Level of Service

Count Date:
Conditions: Future
Design Year: 2042

Location: East Jefferson @ Montrose Road
Computed By: BJM
Date: 4/4/14

Montgomery County Method

Morning Peak Hour 7:15-8:15 am

Lane Configuration

Evening Peak Hour 5:00-6:00 pm

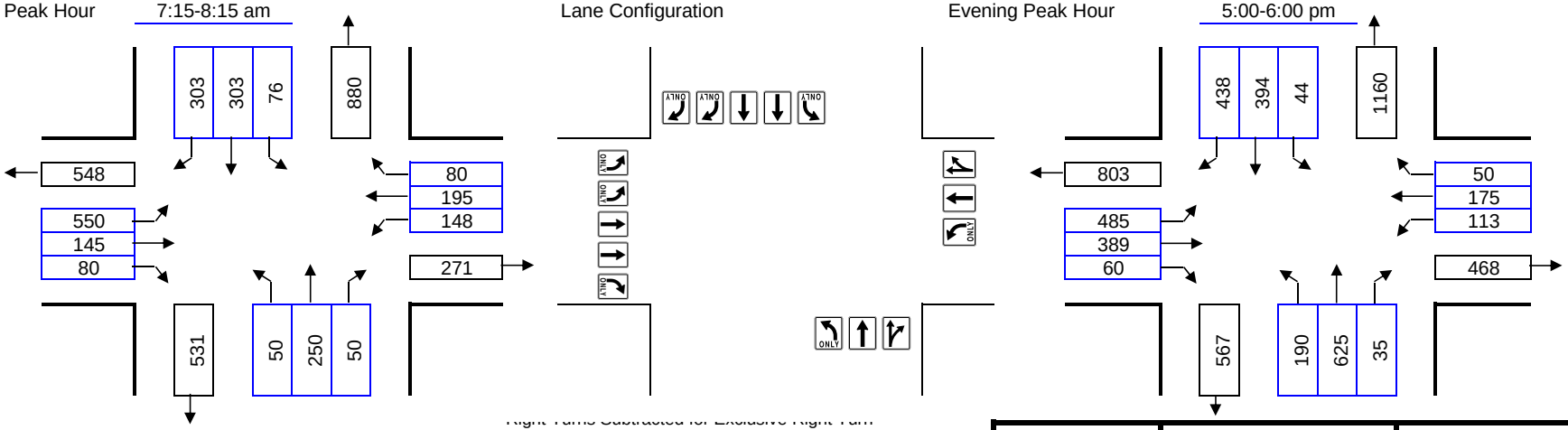

Right Turns Subtracted for Exclusive Right Turn Overlap Phasing or Right Turn on Red and Free Rights:

	AM	PM
NB Approach:	NB	NB
SB Approach:	SB	SB 291
EB Approach:	EB	EB
WB Approach:	WB	WB

Number of Lanes	Lane Use Factor		Opposing Volume (vph)	PCE
1 =	1.00	Congestion Standard	≤ 199	1.1
2 =	0.53	= 1550	≤ 599	2.0
3 =	0.37	for	≤ 799	3.0
4 =	0.30	North Bethesda	≤ 999	4.0
Dbl-left	0.60	Policy	≥ 1000	5.0
		Area		

Movement	Volume	PCE	Lane Use Factor	Lane Volume	Opposing Lefts	Critical Lane Volume	*
NBTR + SBL	300	1.00	0.53	159	76	235	*
SBT + NBL	303	1.00	0.53	161	50	211	
EBR + WBL	80	1.00	1.00	80	148	228	
WBTR + EBL	275	1.00	0.53	146	330	476	*
					Critical Volume	711	OK
					V/C	0.46	

Movement	Volume	PCE	Lane Use Factor	Lane Volume	Opposing Lefts	Critical Lane Volume	*
NBTR + SBL	660	1.00	0.53	350	44	394	
SBT + NBL	394	1.00	0.53	209	190	399	*
EBT + WBL	389	1.00	0.53	206	113	319	
WBTR + EBL	225	1.00	0.53	119	291	410	*
					Critical Volume	809	OK
					V/C	0.52	

Maryland State Highway Administration
Turning Movement Summary and
Level of Service

Count Date:
Conditions: Future SATURDAY
Design Year: 2042

Location: East Jefferson @ Montrose Road
Computed By: LL
Date: 4/4/14

Montgomery County Method

Morning Peak Hour 7:15-8:15 am

Lane Configuration

Evening Peak Hour 5:00-6:00 pm

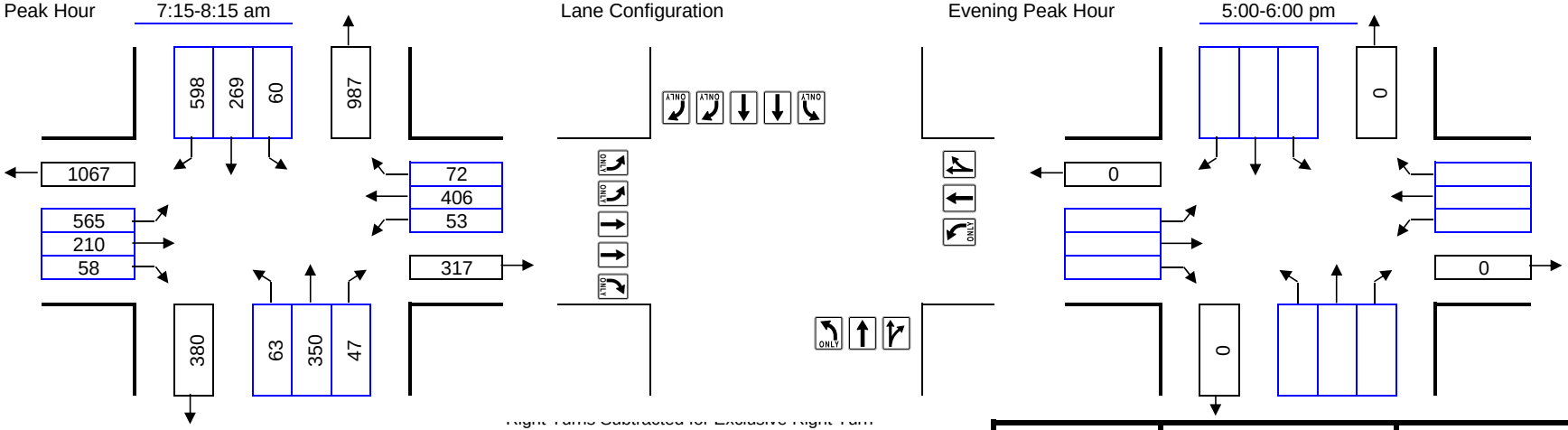

Right Turns Subtracted for Exclusive Right Turn Overlap Phasing or Right Turn on Red and Free Rights:

	AM		PM	
NB Approach:	NB		NB	
SB Approach:	SB	339	SB	
EB Approach:	EB		EB	
WB Approach:	WB		WB	

Number of Lanes	Lane Use Factor		Opposing Volume (vph)		PCE
1 =	1.00	Congestion Standard	≤	199	1.1
2 =	0.53	= 1550	≤	599	2.0
3 =	0.37	for	≤	799	3.0
4 =	0.30	North Bethesda	≤	999	4.0
Dbl-left	0.60	Policy	≥	1000	5.0
		Area			

Movement	Volume	PCE	Lane Use Factor	Lane Volume	Opposing Lefts	Critical Lane Volume	*
NBTR + SBL	397	1.00	0.53	210	60	270	*
SBT + NBL	269	1.00	0.53	143	63	206	
EBT + WBL	210	1.00	0.53	111	53	164	
WBTR + EBL	478	1.00	0.53	253	339	592	*
					Critical Volume	862	OK
					V/C	0.56	

Movement	Volume	PCE	Lane Use Factor	Lane Volume	Opposing Lefts	Critical Lane Volume	*
					Critical Volume	0	OK
					V/C	0.00	

Maryland State Highway Administration
Turning Movement Summary and
Level of Service

Count Date:
Conditions: Future
Design Year: 2042

Location: Hoya Street @ Montrose Road
Computed By: BJM
Date: 4/4/14

Montgomery County Method

Morning Peak Hour 7:15-8:15 am

Lane Configuration

Evening Peak Hour 5:00-6:00 pm

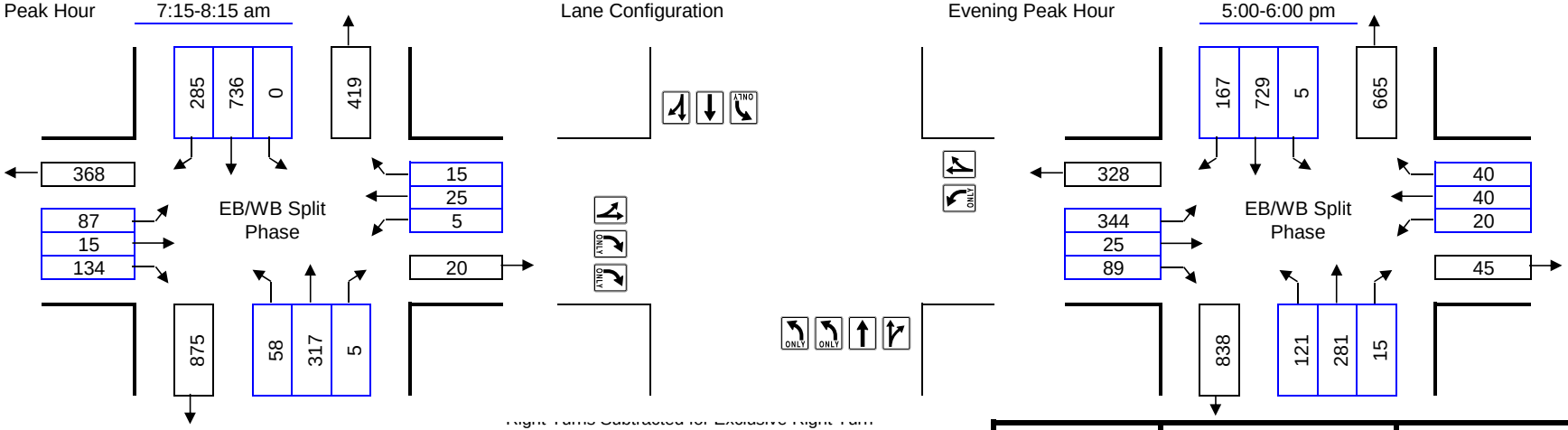

Right Turns Subtracted for Exclusive Right Turn Overlap Phasing or Right Turn on Red and Free Rights:

	AM	PM
NB Approach:	NB	NB
SB Approach:	SB	SB
EB Approach:	EB	EB
WB Approach:	WB	WB

Number of Lanes	Lane Use Factor		Opposing Volume (vph)		PCE
1 =	1.00	Congestion Standard	≤	199	1.1
2 =	0.53	= 1800	≤	599	2.0
3 =	0.37	for	≤	799	3.0
4 =	0.30	White Flint	≤	999	4.0
Dbl-left	0.60	Policy Area	≥	1000	5.0

Movement	Volume	PCE	Lane Use Factor	Lane Volume	Opposing Lefts	Critical Lane Volume	*
NBTR	322	1.00	0.53	171	0	171	
SBTR + NBL	1021	1.00	0.53	541	35	576	*
EBLT	102	1.00	1.00	102	0	102	*
WBTR	40	1.00	1.00	40	0	40	*
					Critical Volume	718	OK
					V/C	0.40	

Movement	Volume	PCE	Lane Use Factor	Lane Volume	Opposing Lefts	Critical Lane Volume	*
NBTR + SBL	296	1.00	0.53	157	5	162	
SBTR + NBL	896	1.00	0.53	475	73	548	*
EBLT	369	1.00	1.00	369	0	369	*
WBTR	80	1.00	1.00	80	0	80	*
					Critical Volume	997	OK
					V/C	0.55	

Maryland State Highway Administration
Turning Movement Summary and
Level of Service

Count Date:
Conditions: Future SATURDAY
Design Year: 2042

Location: Hoya Street @ Montrose Road
Computed By: LL
Date: 4/4/14

Montgomery County Method

Morning Peak Hour 7:15-8:15 am

Lane Configuration

Evening Peak Hour 5:00-6:00 pm

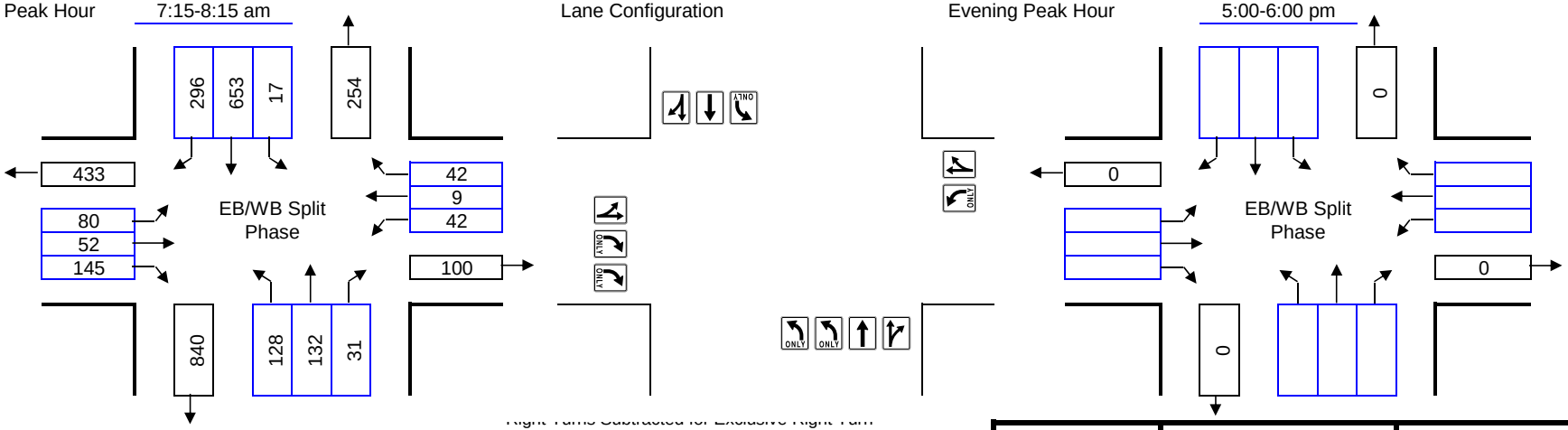

Right Turns Subtracted for Exclusive Right Turn Overlap Phasing or Right Turn on Red and Free Rights:

	AM	PM
NB Approach:	NB	NB
SB Approach:	SB	SB
EB Approach:	EB	EB
WB Approach:	WB	WB

Number of Lanes	Lane Use Factor		Opposing Volume (vph)		PCE
1 =	1.00	Congestion Standard	≤	199	1.1
2 =	0.53	= 1800	≤	599	2.0
3 =	0.37	for	≤	799	3.0
4 =	0.30	White Flint	≤	999	4.0
Dbl-left	0.60	Policy Area	≥	1000	5.0

Movement	Volume	PCE	Lane Use Factor	Lane Volume	Opposing Lefts	Critical Lane Volume	*
NBTR + SBL	163	1.00	0.53	86	17	103	
SBTR + NBL	949	1.00	0.53	503	77	580	*
EBLT	132	1.00	1.00	132	0	132	*
WBTR	51	1.00	1.00	51	0	51	*
					Critical Volume	763	OK
					V/C	0.42	

Movement	Volume	PCE	Lane Use Factor	Lane Volume	Opposing Lefts	Critical Lane Volume	*
					Critical Volume	0	OK
					V/C	0.00	

Maryland State Highway Administration
Turning Movement Summary and
Level of Service

Count Date:
Conditions: Future
Design Year: 2042

Location: Montrose Pkwy. @ E. Jefferson St.
Computed By: BJM
Date: 3/28/14

Montgomery County Method

Morning Peak Hour 7:15-8:15 am

Lane Configuration

Evening Peak Hour 5:00-6:00 pm

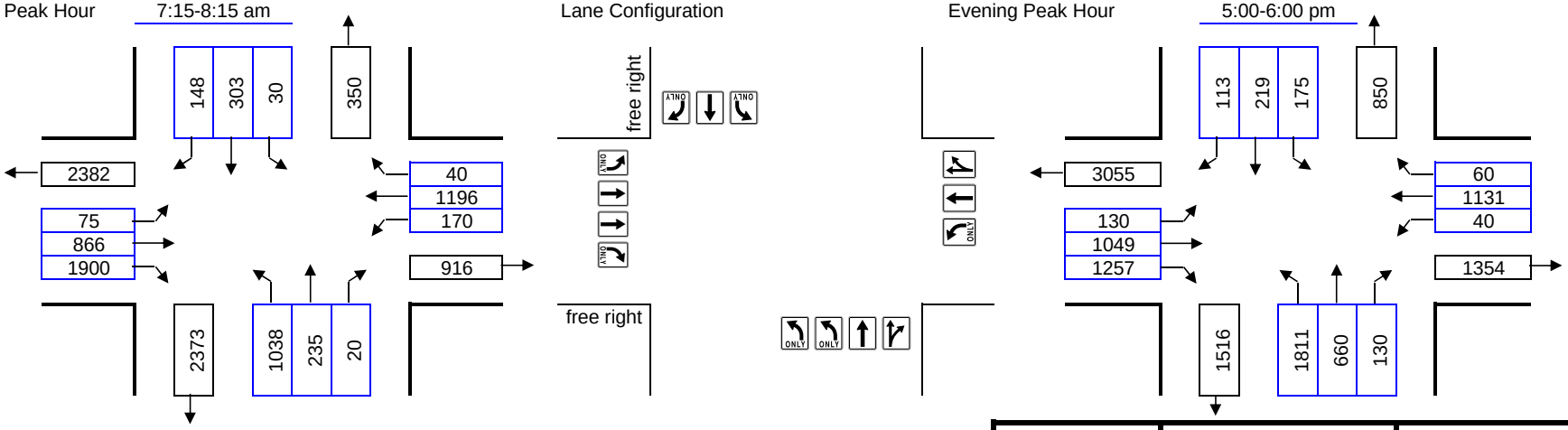

Right Turns Subtracted for Exclusive Right Turn Overlap Phasing or Right Turn on Red:

	AM		PM	
NB Approach:	NB		NB	
SB Approach:	SB		SB	
EB Approach:	EB	1900	EB	1257
WB Approach:	WB		WB	

Number of Lanes	Lane Use Factor		Opposing Volume (vph)		PCE
1 =	1.00	Congestion Standard	≤	199	1.1
2 =	0.53	= 1550	≤	599	2.0
3 =	0.37	for	≤	799	3.0
4 =	0.30	North Bethesda	≤	999	4.0
Dbl-left	0.60	Policy	≥	1000	5.0
		Area			

Movement	Volume	PCE	Lane Use Factor	Lane Volume	Opposing Lefts	Critical Lane Volume	*
NBTR + SBL	255	1.00	0.53	135	30	165	
SBT + NBL	303	1.00	1.00	303	623	926	*
EBT + WBL	866	1.00	0.53	459	170	629	
WBTR + EBL	1236	1.00	0.53	655	75	730	*
					Critical Volume	1656	F
					V/C	1.07	

Movement	Volume	PCE	Lane Use Factor	Lane Volume	Opposing Lefts	Critical Lane Volume	*
NBTR + SBL	790	1.00	0.53	419	175	594	
SBT + NBL	219	1.00	1.00	219	1087	1306	*
EBT + WBL	1049	1.00	0.53	556	40	596	
WBTR + EBL	1191	1.00	0.53	631	130	761	*
					Critical Volume	2067	F
					V/C	1.33	

Maryland State Highway Administration
Turning Movement Summary and
Level of Service

Count Date:
Conditions: Future SATURDAY
Design Year: 2042

Location: Montrose Pkwy. @ E. Jefferson St.
Computed By: LL
Date: 3/28/14

Montgomery County Method

Morning Peak Hour 7:15-8:15 am

Lane Configuration

Evening Peak Hour 5:00-6:00 pm

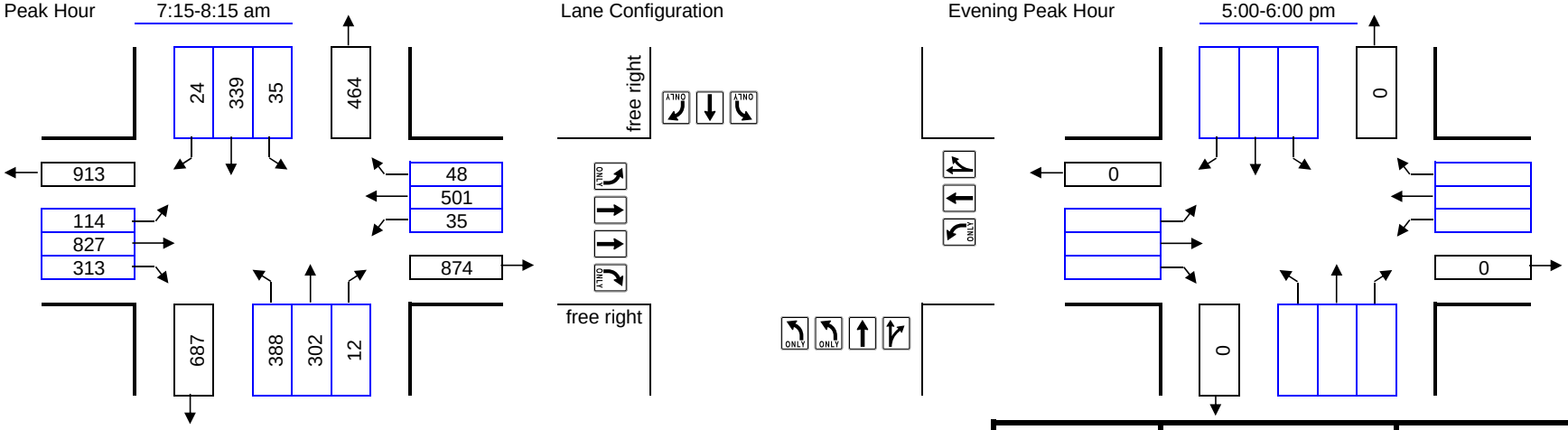

Right Turns Subtracted for Exclusive Right Turn Overlap Phasing or Right Turn on Red:

	AM	PM
NB Approach:	NB	NB
SB Approach:	SB	SB
EB Approach:	EB	EB
WB Approach:	WB	WB

Number of Lanes	Lane Use Factor		Opposing Volume (vph)		PCE
1 =	1.00	Congestion Standard	≤	199	1.1
2 =	0.53	= 1550	≤	599	2.0
3 =	0.37	for	≤	799	3.0
4 =	0.30	North Bethesda	≤	999	4.0
Dbl-left	0.60	Policy	≥	1000	5.0
		Area			

Movement	Volume	PCE	Lane Use Factor	Lane Volume	Opposing Lefts	Critical Lane Volume	*
NBTR + SBL	314	1.00	0.53	166	35	201	
SBT + NBL	339	1.00	1.00	339	233	572	*
EBT + WBL	827	1.00	0.53	438	35	473	*
WBTR + EBL	549	1.00	0.53	291	114	405	
					Critical Volume	1045	OK
						V/C	0.67

Movement	Volume	PCE	Lane Use Factor	Lane Volume	Opposing Lefts	Critical Lane Volume	*
					Critical Volume	0	OK
						V/C	0.00

Maryland State Highway Administration
Turning Movement Summary and
Level of Service

Count Date:
Conditions: Future
Design Year: 2042

Location: Hoya Street @ Montrose Pkwy
Computed By: BJM
Date: 3/28/14

Montgomery County Method

Morning Peak Hour 7:00-8:00 am

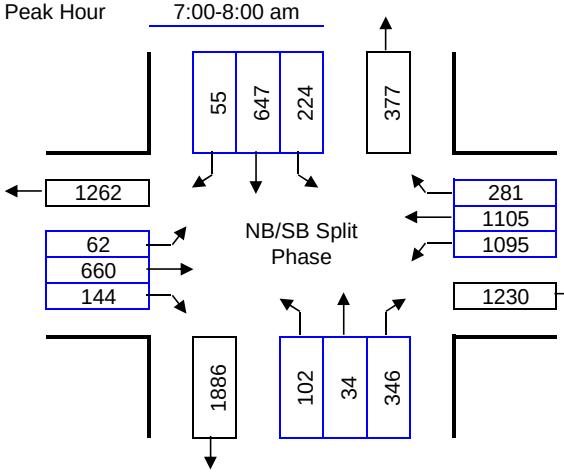

Lane Configuration

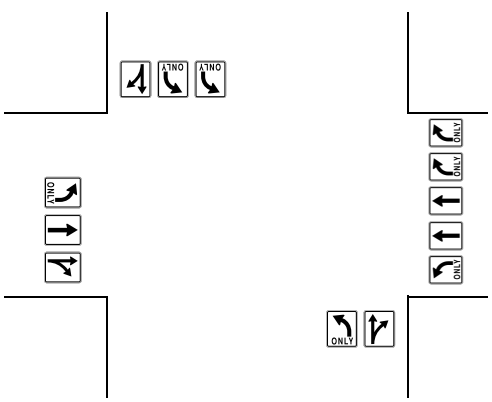

Evening Peak Hour 5:00-6:00 pm

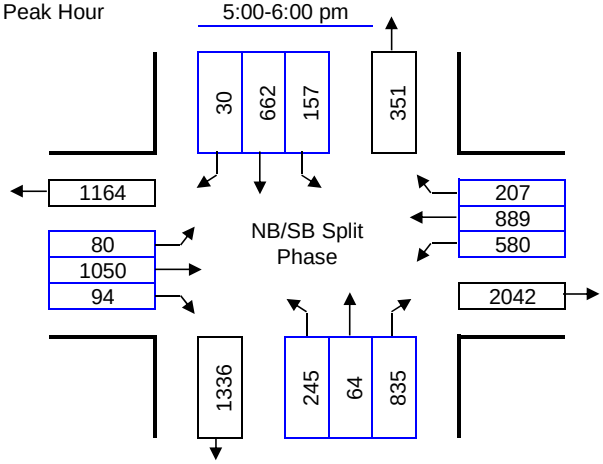

Right Turns Subtracted for Exclusive Right Turn Overlap Phasing or Right Turn on Red:

	AM	PM
NB Approach:	NB	NB
SB Approach:	SB	SB
EB Approach:	EB	EB
WB Approach:	WB	WB

Number of Lanes	Lane Use Factor		Opposing Volume (vph)		PCE
1 =	1.00	Congestion Standard	≤	199	1.1
2 =	0.53	= 1800	≤	599	2.0
3 =	0.37	for	≤	799	3.0
4 =	0.30	White Flint	≤	999	4.0
Dbl-left	0.60	Policy	≥	1000	5.0
		Area			

Movement	Volume	PCE	Lane Use Factor	Lane Volume	Opposing Lefts	Critical Lane Volume	*
NBTR	380	1.00	1.00	380	0	380	*
SBTR	702	1.00	1.00	702	0	702	*
EBTR + WBL	804	1.00	0.53	426	1095	1521	*
WBT + EBL	1105	1.00	0.53	586	62	648	
					Critical Volume	2603	F
					V/C	1.45	

Movement	Volume	PCE	Lane Use Factor	Lane Volume	Opposing Lefts	Critical Lane Volume	*
NBTR	899	1.00	1.00	899	0	899	*
SBTR	692	1.00	1.00	692	0	692	*
EBTR + WBL	1144	1.00	0.53	606	580	1186	*
WBT + EBL	889	1.00	0.53	471	80	551	
					Critical Volume	2777	F
					V/C	1.54	

Maryland State Highway Administration
Turning Movement Summary and
Level of Service

Count Date:
Conditions: Future SATURDAY
Design Year: 2042

Location: Hoya Street @ Montrose Pkwy
Computed By: LL
Date: 3/28/14

Montgomery County Method

Morning Peak Hour 7:00-8:00 am

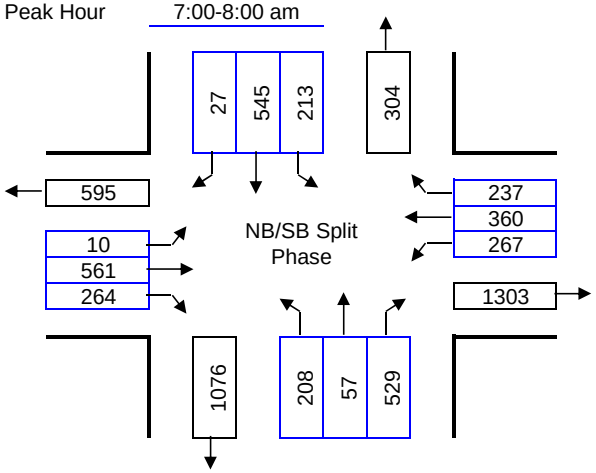

Lane Configuration

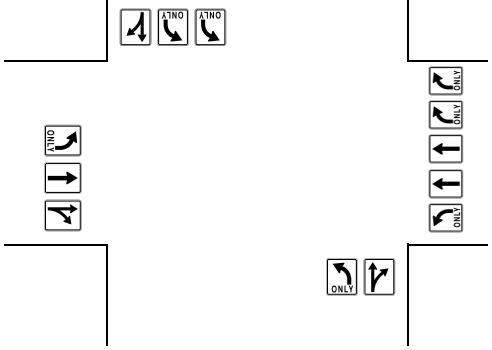

Evening Peak Hour 5:00-6:00 pm

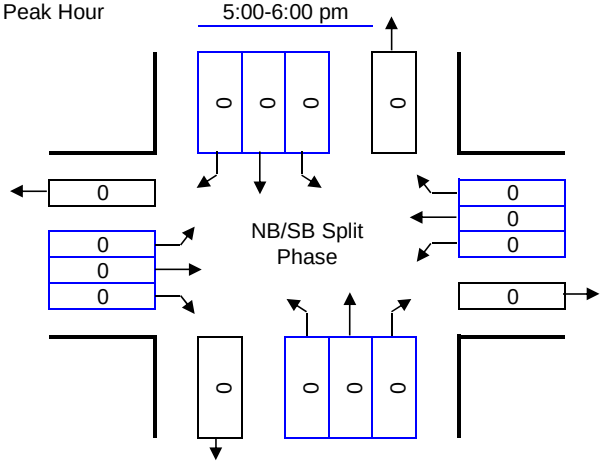

Right Turns Subtracted for Exclusive Right Turn Overlap Phasing or Right Turn on Red:

	AM	PM
NB Approach:	NB	NB
SB Approach:	SB	SB
EB Approach:	EB	EB
WB Approach:	WB	WB

Number of Lanes	Lane Use Factor		Opposing Volume (vph)		PCE
1 =	1.00	Congestion Standard	≤	199	1.1
2 =	0.53	= 1800	≤	599	2.0
3 =	0.37	for	≤	799	3.0
4 =	0.30	White Flint	≤	999	4.0
Dbl-left	0.60	Policy Area	≥	1000	5.0

Movement	Volume	PCE	Lane Use Factor	Lane Volume	Opposing Lefts	Critical Lane Volume	*
NBTR	586	1.00	1.00	586	0	586	*
SBTR	572	1.00	1.00	572	0	572	*
EBTR + WBL	825	1.00	0.53	437	267	704	*
WBT + EBL	360	1.00	0.53	191	10	201	
					Critical Volume	1862	F
					V/C	1.03	

Movement	Volume	PCE	Lane Use Factor	Lane Volume	Opposing Lefts	Critical Lane Volume	*
					Critical Volume	0	OK
					V/C	0.00	

Maryland State Highway Administration
Turning Movement Summary and
Level of Service

Count Date:
Conditions: Future
Design Year: 2042

Location: Randolph Road @ Chapman Avenue/Maple Ave
Computed By: BJM
Date: 4/4/14

Montgomery County Method

Morning Peak Hour 7:15-8:15 am

Lane Configuration

Evening Peak Hour 5:00-6:00 pm

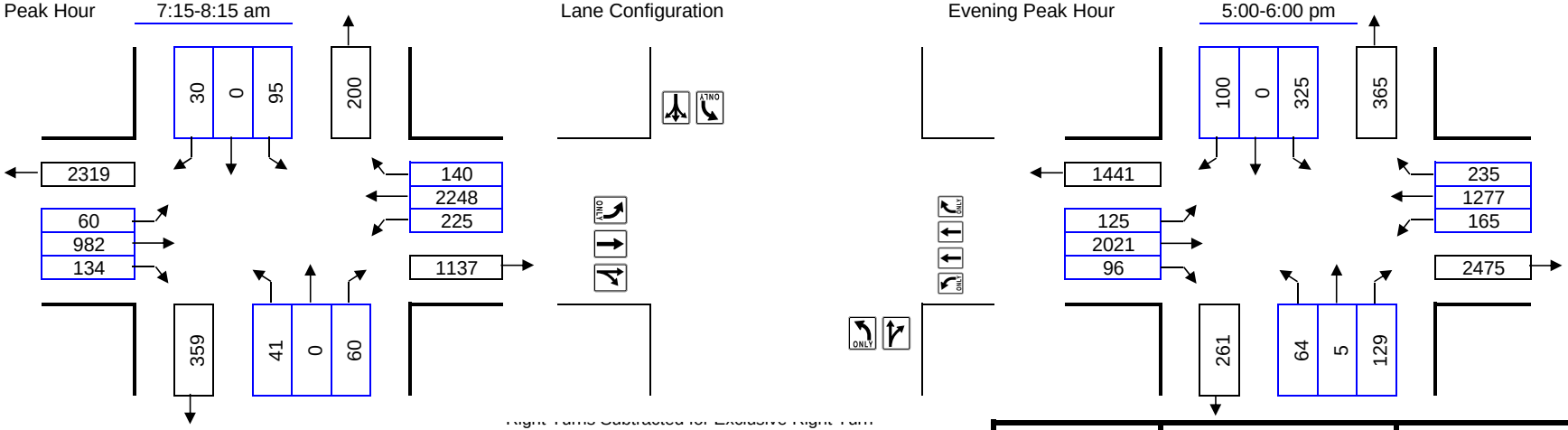

Right Turns Subtracted for Exclusive Right Turn Overlap Phasing or Right Turn on Red and Free Rights:

	AM	PM
NB Approach:	NB	NB
SB Approach:	SB	SB
EB Approach:	EB	EB
WB Approach:	WB	WB

Number of Lanes	Lane Use Factor		Opposing Volume (vph)		PCE
1 =	1.00	Congestion Standard	≤	199	1.1
2 =	0.53	= 1800	≤	599	2.0
3 =	0.37	for	≤	799	3.0
4 =	0.30	White Flint	≤	999	4.0
Dbl-left	0.60	Policy Area	≥	1000	5.0

Movement	Volume	PCE	Lane Use Factor	Lane Volume	Opposing Lefts	Critical Lane Volume	*
NBTR + SBL	60	1.00	1.00	60	57	117	*
SBLTR + NBL	125	1.00	0.60	75	41	116	
EBTR + WBL	1116	1.00	0.53	591	225	816	
WBT + EBL	2248	1.00	0.53	1191	60	1251	*
					Critical Volume	1368	OK
					V/C	0.76	

Movement	Volume	PCE	Lane Use Factor	Lane Volume	Opposing Lefts	Critical Lane Volume	*
NBTR + SBL	134	1.00	1.00	134	195	329	*
SBLTR + NBL	425	1.00	0.60	255	64	319	
EBTR + WBL	2117	1.00	0.53	1122	165	1287	*
WBT + EBL	1277	1.00	0.53	677	125	802	
					Critical Volume	1616	OK
					V/C	0.90	

Maryland State Highway Administration
Turning Movement Summary and
Level of Service

Count Date:
Conditions: Future SATURDAY
Design Year: 2042

Location: Randolph Road @ Chapman Avenue/Maple Ave
Computed By: LL
Date: 4/4/14

Montgomery County Method

Morning Peak Hour 7:15-8:15 am

Lane Configuration

Evening Peak Hour 5:00-6:00 pm

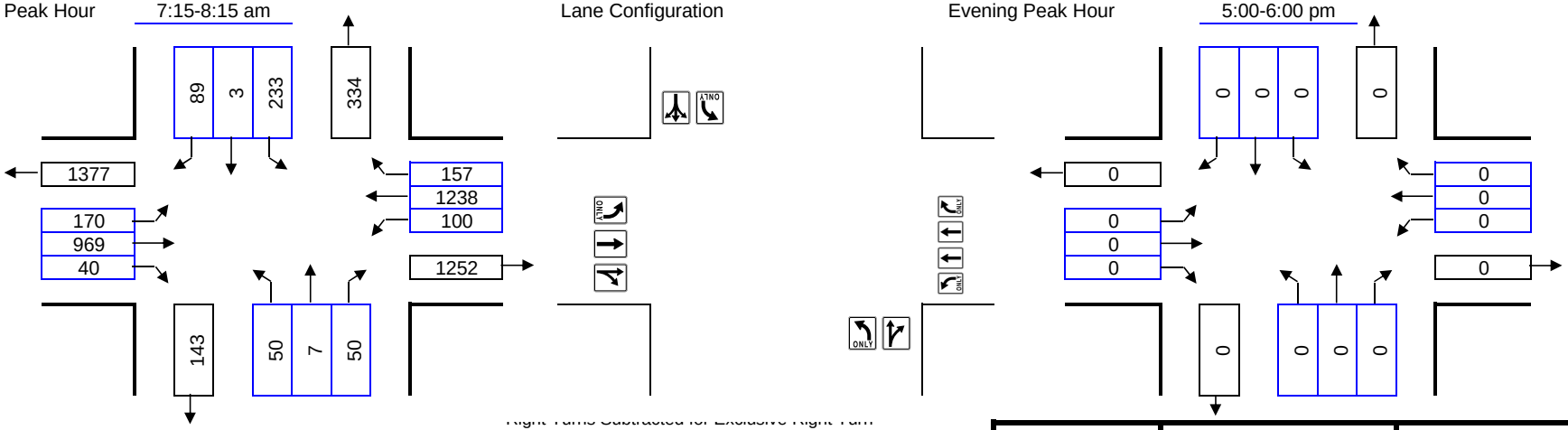

Right Turns Subtracted for Exclusive Right Turn Overlap Phasing or Right Turn on Red and Free Rights:

	AM	PM
NB Approach:	NB	NB
SB Approach:	SB	SB
EB Approach:	EB	EB
WB Approach:	WB	WB

Number of Lanes	Lane Use Factor		Opposing Volume (vph)		PCE
1 =	1.00	Congestion Standard	≤	199	1.1
2 =	0.53	= 1800	≤	599	2.0
3 =	0.37	for	≤	799	3.0
4 =	0.30	White Flint	≤	999	4.0
Dbl-left	0.60	Policy	≥	1000	5.0
		Area			

Movement	Volume	PCE	Lane Use Factor	Lane Volume	Opposing Lefts	Critical Lane Volume	*
NBTR + SBL	57	1.00	1.00	57	140	197	
SBLTR + NBL	325	1.00	0.60	195	50	245	*
EBTR + WBL	1009	1.00	0.53	535	100	635	
WBT + EBL	1238	1.00	0.53	656	170	826	*
					Critical Volume	1071	OK
					V/C	0.60	

Movement	Volume	PCE	Lane Use Factor	Lane Volume	Opposing Lefts	Critical Lane Volume	*
					Critical Volume	0	OK
					V/C	0.00	

Maryland State Highway Administration
Turning Movement Summary and
Level of Service

Count Date:
Conditions: Future
Design Year: 2042

Location: Randolph Road @ Nebel

Computed By: BJM Date: 4/4/14

Montgomery County Method

Morning Peak Hour 7:15-8:15 am

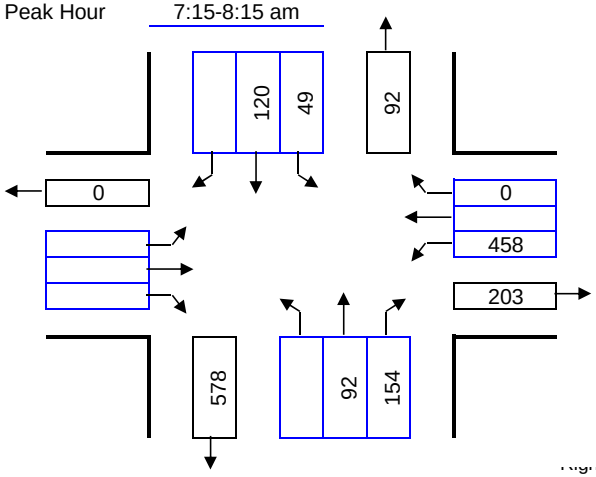

Lane Configuration

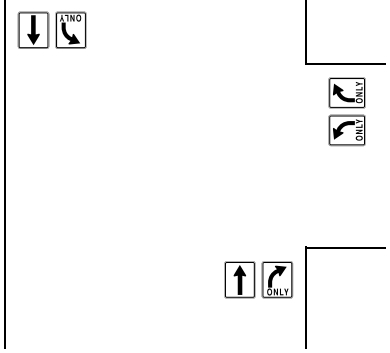

Evening Peak Hour 5:00-6:00 pm

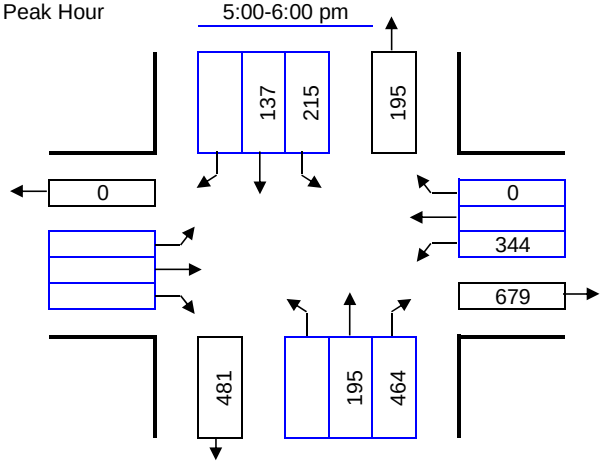

Right Turns Subtracted for Exclusive Right Turn Overlap Phasing or Right Turn on Red and Free Rights:

	AM		PM	
NB Approach:	NB	154	NB	344
SB Approach:	SB		SB	
EB Approach:	EB		EB	
WB Approach:	WB		WB	

Number of Lanes	Lane Use Factor		Opposing Volume (vph)		PCE
1 =	1.00	Congestion Standard	≤	199	1.1
2 =	0.53	= 1800	≤	599	2.0
3 =	0.37	for	≤	799	3.0
4 =	0.30	White Flint	≤	999	4.0
Dbl-left	0.60	Policy	≥	1000	5.0
		Area			

Movement	Volume	PCE	Lane Use Factor	Lane Volume	Opposing Lefts	Critical Lane Volume	*
NBT + SBL	92	1.00	1.00	92	49	141	*
SBT	120	1.00	1.00	120	0	120	
WBL	458	1.00	1.00	458	0	458	*
					Critical Volume	599	OK
					V/C	0.33	

Movement	Volume	PCE	Lane Use Factor	Lane Volume	Opposing Lefts	Critical Lane Volume	*
NBT + SBL	195	1.00	1.00	195	215	410	*
SBT	137	1.00	1.00	137	0	137	
WBL	344	1.00	1.00	344	0	344	*
					Critical Volume	754	OK
					V/C	0.42	

Maryland State Highway Administration
Turning Movement Summary and
Level of Service

Count Date:
Conditions: Future SATURDAY
Design Year: 2042

Location: Randolph Road @ Nebel
Computed By: LL
Date: 4/4/14

Montgomery County Method

Morning Peak Hour 7:15-8:15 am

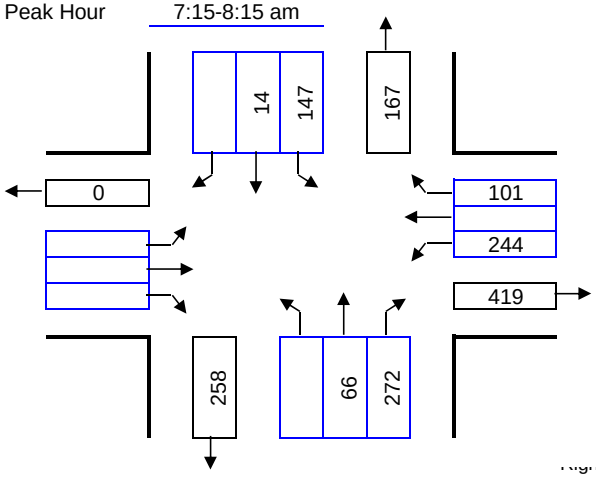

Lane Configuration

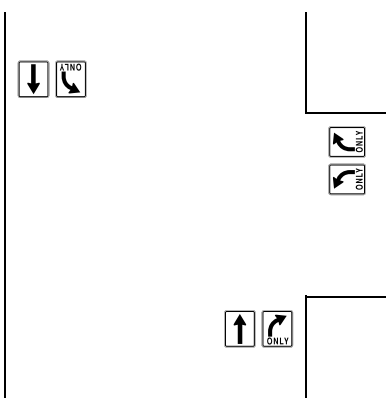

Evening Peak Hour 5:00-6:00 pm

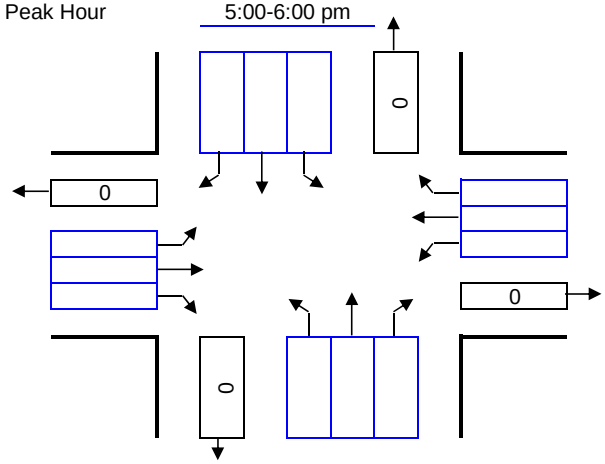

Right Turns Subtracted for Exclusive Right Turn Overlap Phasing or Right Turn on Red and Free Rights:

	AM	PM
NB Approach:	NB 244	NB
SB Approach:	SB	SB
EB Approach:	EB	EB
WB Approach:	WB	WB

Number of Lanes	Lane Use Factor		Opposing Volume (vph)		PCE
1 =	1.00	Congestion Standard	≤	199	1.1
2 =	0.53	= 1800	≤	599	2.0
3 =	0.37	for	≤	799	3.0
4 =	0.30	White Flint	≤	999	4.0
Dbl-left	0.60	Policy	≥	1000	5.0
		Area			

Movement	Volume	PCE	Lane Use Factor	Lane Volume	Opposing Lefts	Critical Lane Volume	*
NBT + SBL	66	1.00	1.00	66	147	213	*
SBT	14	1.00	1.00	14	0	14	
WBL	244	1.00	1.00	244	0	244	*
					Critical Volume	457	OK
						V/C	0.25

Movement	Volume	PCE	Lane Use Factor	Lane Volume	Opposing Lefts	Critical Lane Volume	*
					Critical Volume	0	OK
						V/C	0.00

Maryland State Highway Administration
Turning Movement Summary and
Level of Service

Count Date:
Conditions: Future
Design Year: 2042

Location: Randolph Rd. @ Parklawn Dr.
Computed By: BJM
Date: 3/28/14

Montgomery County Method

Morning Peak Hour 7:15-8:15 am

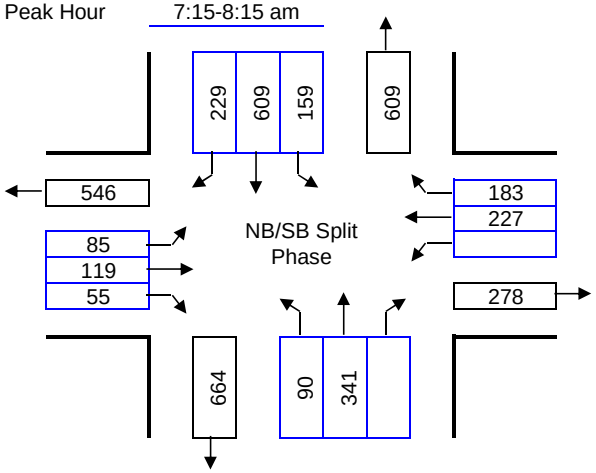

Lane Configuration

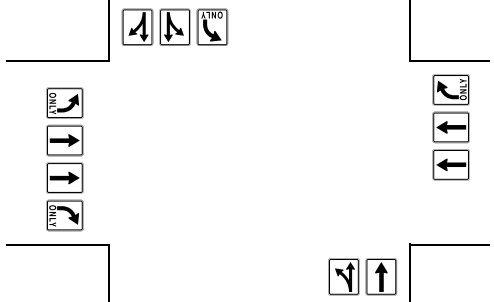

Evening Peak Hour 5:00-6:00 pm

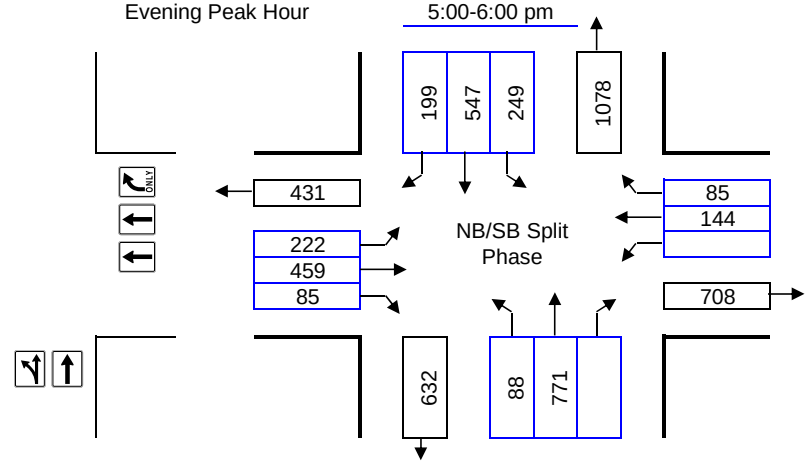

Right Turns Subtracted for Exclusive Right Turn Overlap Phasing or Right Turn on Red:

	AM		PM	
NB Approach:	NB		NB	
SB Approach:	SB		SB	
EB Approach:	EB		EB	
WB Approach:	WB	183	WB	85

Number of Lanes	Lane Use Factor		Opposing Volume (vph)		PCE
1 =	1.00	Congestion Standard	≤	199	1.1
2 =	0.53	= 1550	≤	599	2.0
3 =	0.37	for	≤	799	3.0
4 =	0.30	North Bethesda	≤	999	4.0
Dbl-left	0.60	Policy	≥	1000	5.0
		Area			

Movement	Volume	PCE	Lane Use Factor	Lane Volume	Opposing Lefts	Critical Lane Volume	*
NBLT	431	1.00	0.53	228	0	228	*
SBLTR	838	1.00	0.53	444	0	444	*
EBT	119	1.00	0.53	63	0	63	
WBT + EBL	227	1.00	0.53	120	85	205	*
					Critical Volume	877	OK
					V/C	0.57	

De facto through lane(s) assumed for SB approach.

Movement	Volume	PCE	Lane Use Factor	Lane Volume	Opposing Lefts	Critical Lane Volume	*
NBLT	859	1.00	0.53	455	0	455	*
SBLTR	746	1.00	0.53	395	0	395	*
EBT	459	1.00	0.53	243	0	243	
WBT + EBL	144	1.00	0.53	76	222	298	*
					Critical Volume	1148	OK
					V/C	0.74	

De facto through lane(s) assumed for SB approach.

Maryland State Highway Administration
Turning Movement Summary and
Level of Service

Count Date:
Conditions: Future SATURDAY
Design Year: 2042

Location: Randolph Rd. @ Parklawn Dr.
Computed By: LL
Date: 3/28/14

Montgomery County Method

Morning Peak Hour 7:15-8:15 am

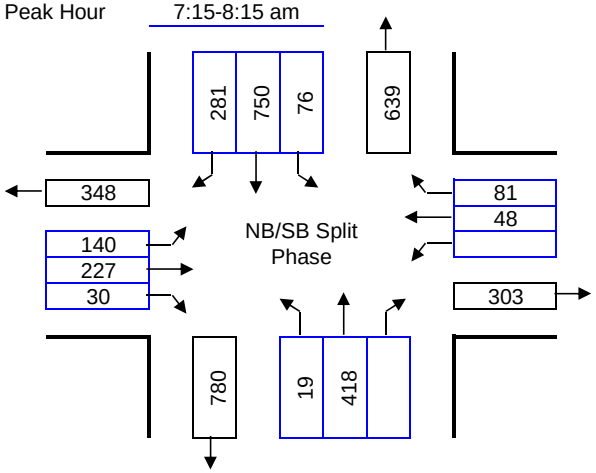

Lane Configuration

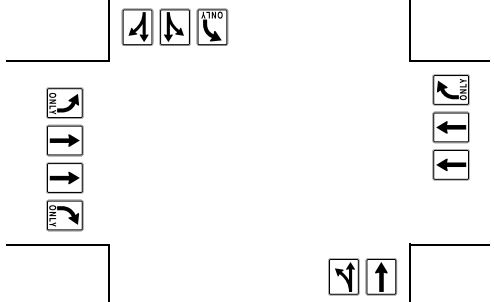

Evening Peak Hour 5:00-6:00 pm

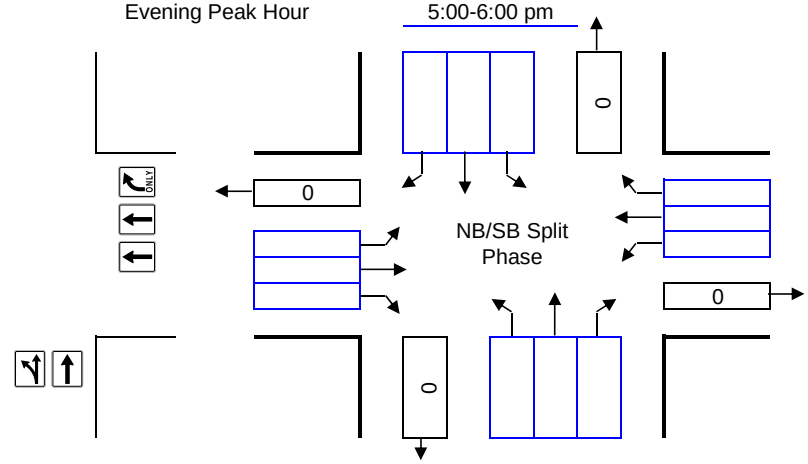

Right Turns Subtracted for Exclusive Right Turn Overlap Phasing or Right Turn on Red:

	AM	PM
NB Approach:	NB	NB
SB Approach:	SB	SB
EB Approach:	EB	EB
WB Approach:	WB 81	WB

Number of Lanes	Lane Use Factor		Opposing Volume (vph)		PCE
1 =	1.00	Congestion Standard	≤	199	1.1
2 =	0.53	= 1550	≤	599	2.0
3 =	0.37	for	≤	799	3.0
4 =	0.30	North Bethesda	≤	999	4.0
Dbl-left	0.60	Policy	≥	1000	5.0
		Area			

Movement	Volume	PCE	Lane Use Factor	Lane Volume	Opposing Lefts	Critical Lane Volume	*
NBLT	437	1.00	0.53	232	0	232	*
SBLTR	1031	1.00	0.53	546	0	546	*
EBT	227	1.00	0.53	120	0	120	
WBT + EBL	48	1.00	0.53	25	140	165	*
					Critical Volume	943	OK
					V/C	0.61	

De facto through lane(s) assumed for SB approach.

Movement	Volume	PCE	Lane Use Factor	Lane Volume	Opposing Lefts	Critical Lane Volume	*
					Critical Volume	0	OK
					V/C	0.00	

Maryland State Highway Administration
Turning Movement Summary and
Level of Service

Count Date:
Conditions: Future
Design Year: 2042

Location: Randolph @ Lauderdale
Computed By: BJM
Date: 3/28/14

Montgomery County Method

Morning Peak Hour 7:15-8:15 am

Lane Configuration

Evening Peak Hour 5:00-6:00 pm

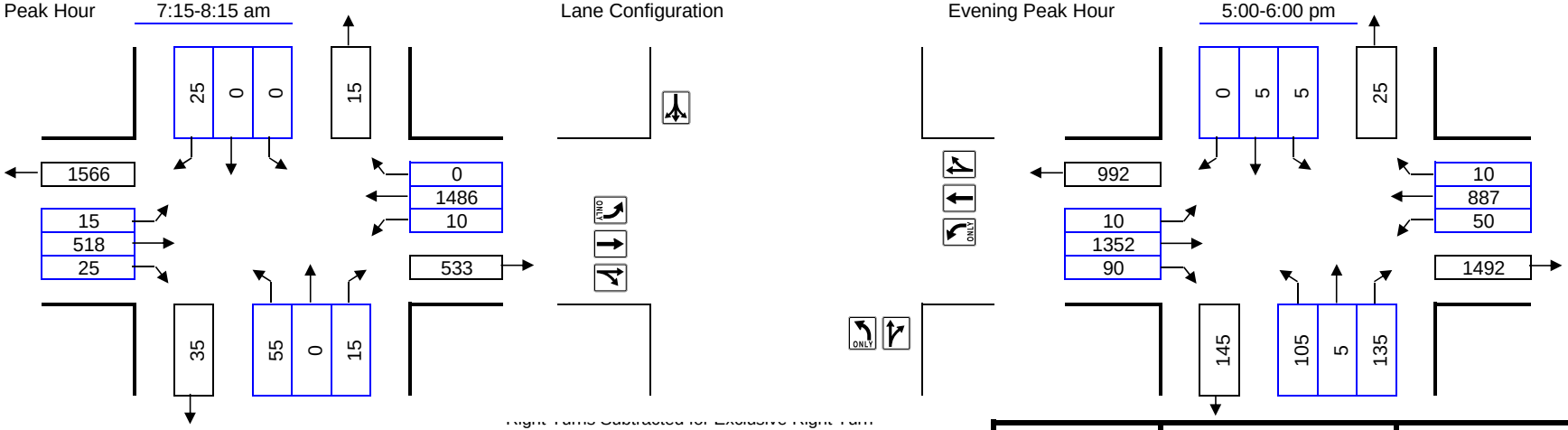

Right Turns Subtracted for Exclusive Right Turn Overlap Phasing or Right Turn on Red and Free Rights:

	AM	PM
NB Approach:	NB	NB
SB Approach:	SB	SB
EB Approach:	EB	EB
WB Approach:	WB	WB

Number of Lanes	Lane Use Factor		Opposing Volume (vph)		PCE
1 =	1.00	Congestion Standard	≤	199	1.1
2 =	0.53	= 1550	≤	599	2.0
3 =	0.37	for	≤	799	3.0
4 =	0.30	North Bethesda	≤	999	4.0
Dbl-left	0.60	Policy	≥	1000	5.0
		Area			

Movement	Volume	PCE	Lane Use Factor	Lane Volume	Opposing Lefts	Critical Lane Volume	*
NBTR	15	1.00	1.00	15	0	15	
SBTR + NBL	25	1.00	1.00	25	55	80	*
EBTR + WBL	543	1.00	0.53	288	10	298	
WBT + EBL	1486	1.00	0.53	788	15	803	*
					Critical Volume	883	OK
					V/C	0.57	

Movement	Volume	PCE	Lane Use Factor	Lane Volume	Opposing Lefts	Critical Lane Volume	*
NBTR + SBL	140	1.00	1.00	140	5	145	*
SBLT + NBL	10	1.00	1.00	10	105	115	
EBTR + WBL	1442	1.00	0.53	764	50	814	*
WBTR + EBL	897	1.00	0.53	475	10	485	
					Critical Volume	959	OK
					V/C	0.62	

Maryland State Highway Administration
Turning Movement Summary and
Level of Service

Count Date:
Conditions: Future SATURDAY
Design Year: 2042

Location: Randolph @ Lauderdale
Computed By: LL
Date: 3/28/14

Montgomery County Method

Morning Peak Hour 7:15-8:15 am

Lane Configuration

Evening Peak Hour 5:00-6:00 pm

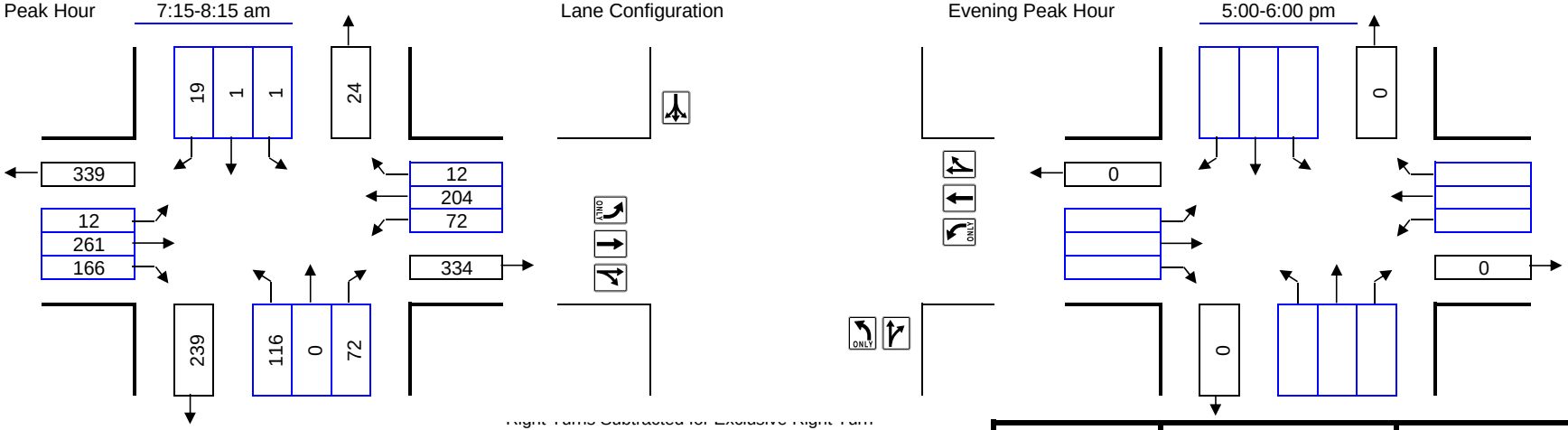

Right Turns Subtracted for Exclusive Right Turn Overlap Phasing or Right Turn on Red and Free Rights:

	AM	PM
NB Approach:	NB	NB
SB Approach:	SB	SB
EB Approach:	EB	EB
WB Approach:	WB	WB

Number of Lanes	Lane Use Factor		Opposing Volume (vph)		PCE
1 =	1.00	Congestion Standard	≤	199	1.1
2 =	0.53	= 1550	≤	599	2.0
3 =	0.37	for	≤	799	3.0
4 =	0.30	North Bethesda	≤	999	4.0
Dbl-left	0.60	Policy	≥	1000	5.0
		Area			

Movement	Volume	PCE	Lane Use Factor	Lane Volume	Opposing Lefts	Critical Lane Volume	*
NBTR + SBL	72	1.00	1.00	72	1	73	
SBLTR + NBL	21	1.00	1.00	21	116	137	*
EBTR + WBL	427	1.00	0.53	226	72	298	*
WBTR + EBL	216	1.00	0.53	114	12	126	
					Critical Volume	435	OK
					V/C	0.28	

Movement	Volume	PCE	Lane Use Factor	Lane Volume	Opposing Lefts	Critical Lane Volume	*
					Critical Volume	0	OK
					V/C	0.00	

Maryland State Highway Administration
Turning Movement Summary and
Level of Service

Count Date:
Conditions: Future
Design Year: 2042

Location: Old Georgetown Road/Hoya St @ Executive Blvd
Computed By: BJM
Date: 3/28/14

Montgomery County Method

Morning Peak Hour 7:45-8:45 am

Lane Configuration

Evening Peak Hour 4:45-5:45 pm

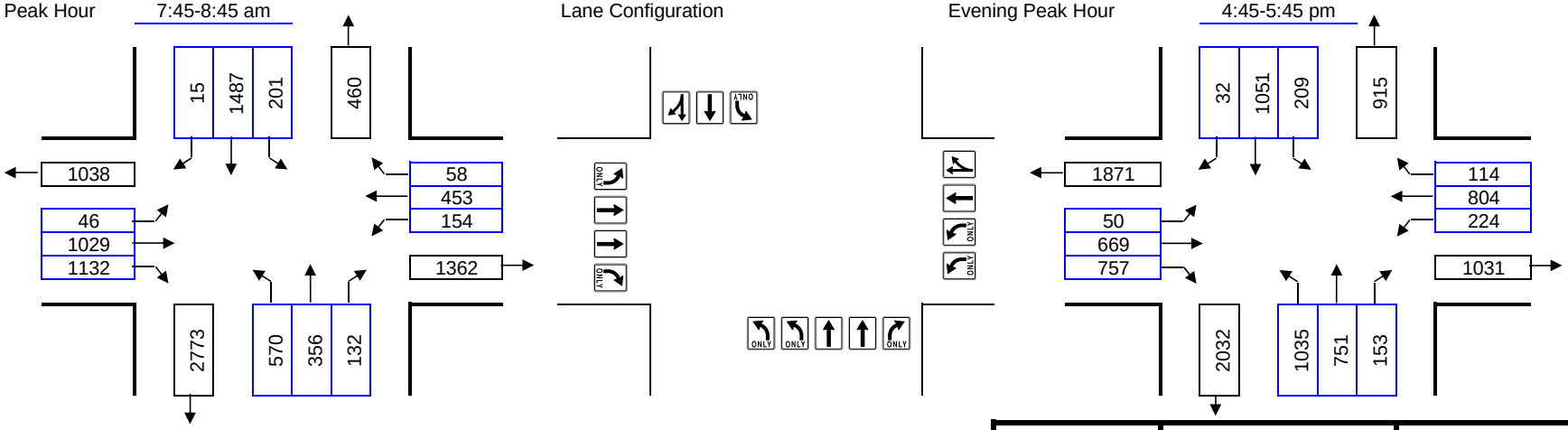

Right Turns Subtracted for Exclusive Right Turn Overlap Phasing or Right Turn on Red:

	AM		PM	
NB Approach:	NB		NB	
SB Approach:	SB		SB	
EB Approach:	EB	298	EB	621
WB Approach:	WB		WB	

Number of Lanes	Lane Use Factor		Opposing Volume (vph)		PCE
1 =	1.00	Congestion Standard	≤	199	1.1
2 =	0.53	= 1800	≤	599	2.0
3 =	0.37	for	≤	799	3.0
4 =	0.30	White Flint	≤	999	4.0
Dbl-left	0.60	Policy Area	≥	1000	5.0

Movement	Volume	PCE	Lane Use Factor	Lane Volume	Opposing Lefts	Critical Lane Volume	*
NBT + SBL	356	1.00	0.53	189	201	390	
SBTR + NBL	1502	1.00	0.53	796	342	1138	*
EBR + WBL	834	1.00	1.00	834	92	926	*
WBTR + EBL	511	1.00	0.53	271	46	317	
					Critical Volume	2064	F
					V/C	1.15	

Movement	Volume	PCE	Lane Use Factor	Lane Volume	Opposing Lefts	Critical Lane Volume	*
NBT + SBL	751	1.00	0.53	398	209	607	
SBTR + NBL	1083	1.00	0.53	574	621	1195	*
EBT + WBL	669	1.00	0.53	355	134	489	
WBTR + EBL	918	1.00	0.53	487	50	537	*
					Critical Volume	1732	OK
					V/C	0.96	

Maryland State Highway Administration
Turning Movement Summary and
Level of Service

Count Date:
Conditions: Future
Design Year: 2042 - SATURDAY

Location: Old Georgetown Road/Hoya St @ Executive Blvd.
Computed By: LL
Date: 3/28/14

Montgomery County Method

Morning Peak Hour 7:00-8:00 am

Lane Configuration

Evening Peak Hour 5:00-6:00 pm

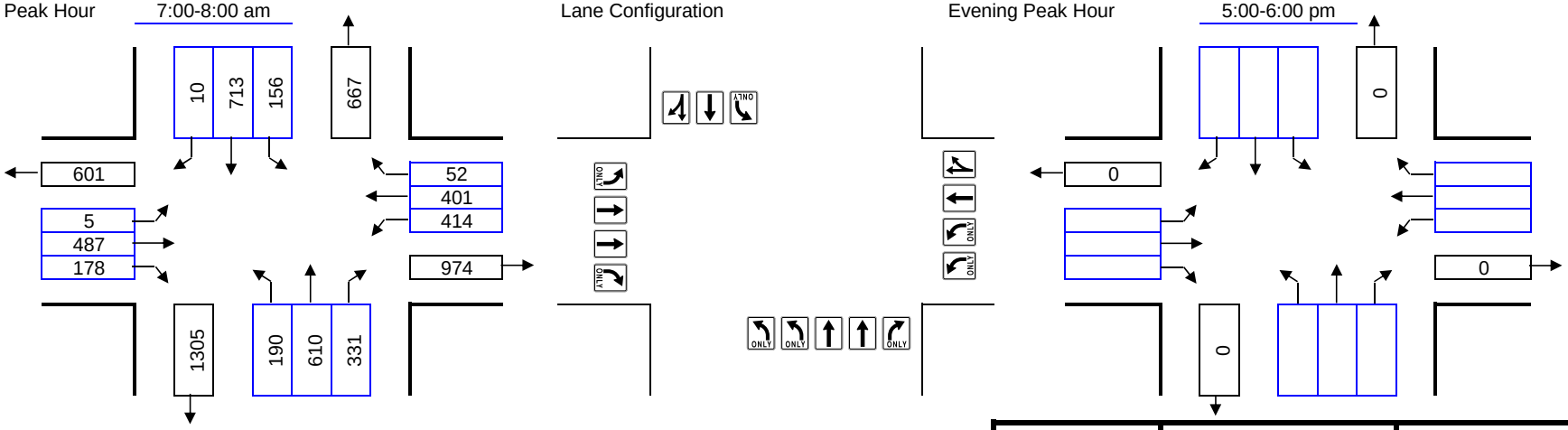

Right Turns Subtracted for Exclusive Right Turn
Overlap Phasing or Right Turn on Red:

	AM	PM
NB Approach:	NB	NB
SB Approach:	SB	SB
EB Approach:	EB	EB
WB Approach:	WB	WB

Number of Lanes	Lane Use Factor		Opposing Volume (vph)		PCE
1 =	1.00	Congestion Standard	≤	199	1.1
2 =	0.53	= 1800	≤	599	2.0
3 =	0.37	for	≤	799	3.0
4 =	0.30	White Flint	≤	999	4.0
Dbl-left	0.60	Policy	≥	1000	5.0
		Area			

Movement	Volume	PCE	Lane Use Factor	Lane Volume	Opposing Lefts	Critical Lane Volume	*
NBR + SBL	331	1.00	1.00	331	156	487	
SBTR + NBL	723	1.00	0.53	383	114	497	*
EBT + WBL	487	1.00	0.53	258	248	506	*
WBTR + EBL	453	1.00	0.53	240	5	245	
					Critical Volume	1003	OK
					V/C	0.56	

Movement	Volume	PCE	Lane Use Factor	Lane Volume	Opposing Lefts	Critical Lane Volume	*
					Critical Volume	0	OK
					V/C	0.00	

Maryland State Highway Administration
Turning Movement Summary and
Level of Service

Count Date:
Conditions: Future
Design Year: 2042

Location: Old Georgetown Road @ Executive Blvd./Mid Pike
Computed By: BJM
Date: 3/28/14

Montgomery County Method

Morning Peak Hour 7:00-8:00 am

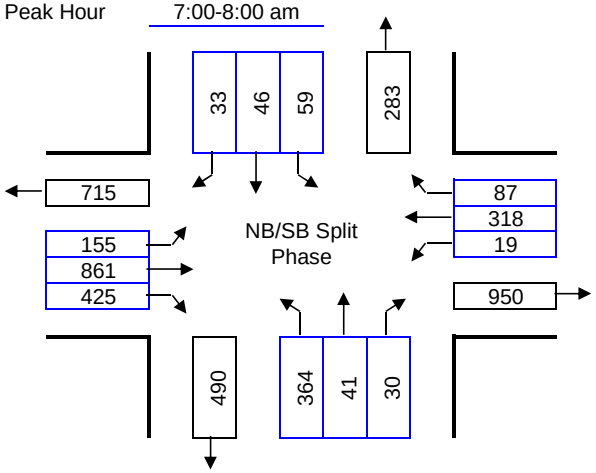

Lane Configuration

Evening Peak Hour 5:00-6:00 pm

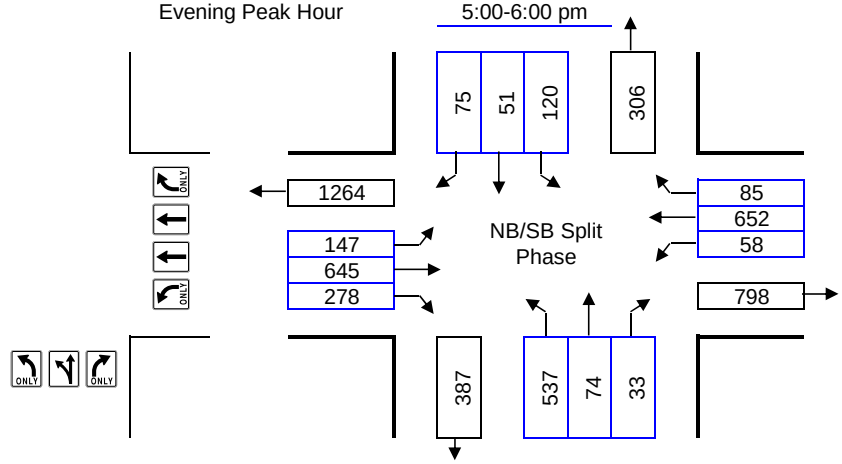

Right Turns Subtracted for Exclusive Right Turn Overlap Phasing or Right Turn on Red:

	AM	PM
NB Approach:	NB	NB
SB Approach:	SB	SB
EB Approach:	EB	EB
WB Approach:	WB	WB

Number of Lanes	Lane Use Factor		Opposing Volume (vph)		PCE
1 =	1.00	Congestion Standard	≤	199	1.1
2 =	0.53	= 1800	≤	599	2.0
3 =	0.37	for	≤	799	3.0
4 =	0.30	White Flint	≤	999	4.0
Dbl-left	0.60	Policy Area	≥	1000	5.0

Movement	Volume	PCE	Lane Use Factor	Lane Volume	Opposing Lefts	Critical Lane Volume	*
NBLT	405	1.00	0.60	243	0	243	*
SBTR	79	1.00	1.00	79	0	79	*
EBT + WBL	861	1.00	0.53	456	19	475	*
WBT + EBL	318	1.00	0.53	169	155	324	
					Critical Volume	797	OK
					V/C	0.44	

Movement	Volume	PCE	Lane Use Factor	Lane Volume	Opposing Lefts	Critical Lane Volume	*
NBLT	611	1.00	0.60	367	0	367	*
SBTR	126	1.00	1.00	126	0	126	*
EBT + WBL	645	1.00	0.53	342	58	400	
WBT + EBL	652	1.00	0.53	346	147	493	*
					Critical Volume	986	OK
					V/C	0.55	

Maryland State Highway Administration
Turning Movement Summary and
Level of Service

Count Date:
Conditions: Future - Volume Update
Design Year: 2042 - SATURDAY

Location: Old Georgetown Road @ Executive Blvd./Mid Pike
Computed By: LL
Date: 3/28/14

Montgomery County Method

Morning Peak Hour 7:00-8:00 am

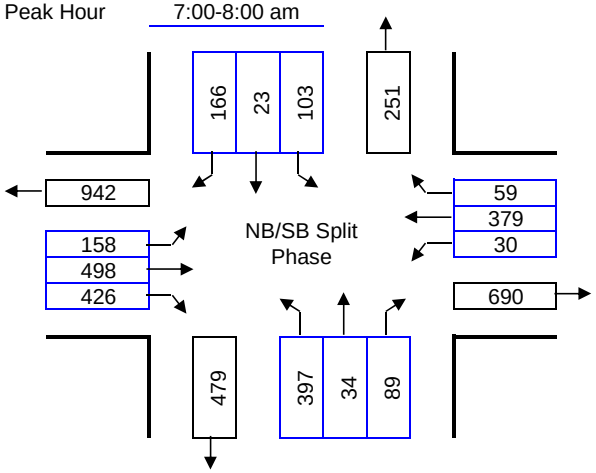

Lane Configuration

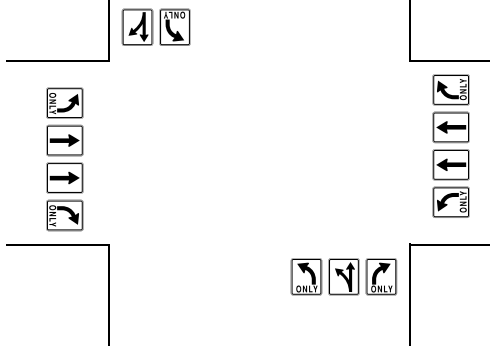

Evening Peak Hour 5:00-6:00 pm

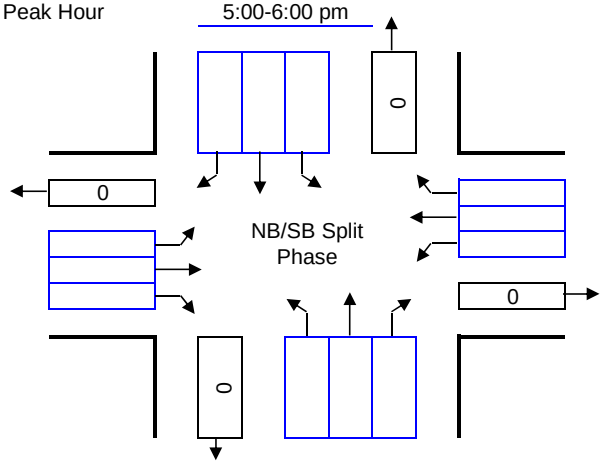

Right Turns Subtracted for Exclusive Right Turn Overlap Phasing or Right Turn on Red:

	AM		PM	
NB Approach:	NB		NB	
SB Approach:	SB		SB	
EB Approach:	EB	259	EB	
WB Approach:	WB		WB	

Number of Lanes	Lane Use Factor		Opposing Volume (vph)		PCE
1 =	1.00	Congestion Standard	≤	199	1.1
2 =	0.53	= 1800	≤	599	2.0
3 =	0.37	for	≤	799	3.0
4 =	0.30	White Flint	≤	999	4.0
Dbl-left	0.60	Policy	≥	1000	5.0
		Area			

Movement	Volume	PCE	Lane Use Factor	Lane Volume	Opposing Lefts	Critical Lane Volume	*
NBLT	431	1.00	0.60	259	0	259	*
SBTR	189	1.00	1.00	189	0	189	*
EBT + WBL	498	1.00	0.53	264	30	294	
WBT + EBL	379	1.00	0.53	201	158	359	*
					Critical Volume	807	OK
					V/C	0.45	

Movement	Volume	PCE	Lane Use Factor	Lane Volume	Opposing Lefts	Critical Lane Volume	*
					Critical Volume	0	OK
					V/C	0.00	

Maryland State Highway Administration
Turning Movement Summary and
Level of Service

Count Date:
Conditions: Future
Design Year: 2042

Location: Old Georgetown @ Nebel
Computed By: BJM
Date: 3/28/14

Montgomery County Method

Morning Peak Hour 7:15-8:15 am

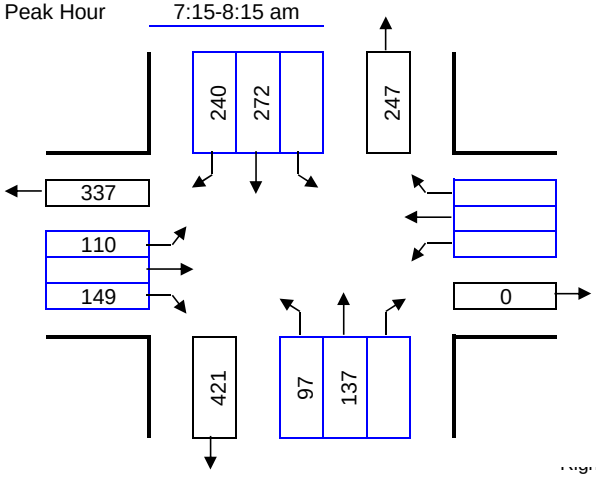

Lane Configuration

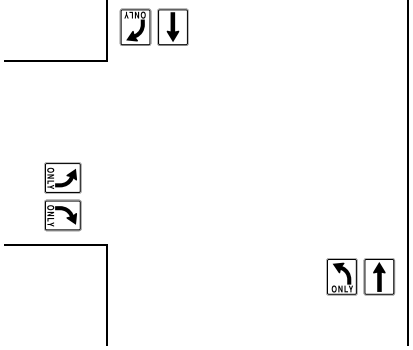

Evening Peak Hour 5:00-6:00 pm

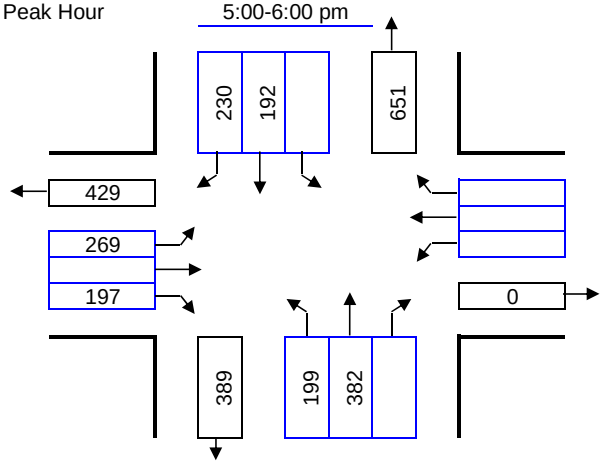

Right Turns Subtracted for Exclusive Right Turn Overlap Phasing or Right Turn on Red and Free Rights:

	AM	PM
NB Approach:	NB	NB
SB Approach:	SB	SB 230
EB Approach:	EB	EB
WB Approach:	WB	WB

Number of Lanes	Lane Use Factor		Opposing Volume (vph)		PCE
1 =	1.00	Congestion Standard	≤	199	1.1
2 =	0.53	= 1800	≤	599	2.0
3 =	0.37	for	≤	799	3.0
4 =	0.30	White Flint	≤	999	4.0
Dbl-left	0.60	Policy Area	≥	1000	5.0

Movement	Volume	PCE	Lane Use Factor	Lane Volume	Opposing Lefts	Critical Lane Volume	*
NBT	137	1.00	1.00	137	0	137	
SBT + NBL	272	1.00	1.00	272	97	369	*
EBR	149	1.00	1.00	149	0	149	*
					Critical Volume	518	OK
						V/C	0.29

Movement	Volume	PCE	Lane Use Factor	Lane Volume	Opposing Lefts	Critical Lane Volume	*
NBT	382	1.00	1.00	382	0	382	
SBT + NBL	192	1.00	1.00	192	199	391	*
EBL	269	1.00	1.00	269	0	269	*
					Critical Volume	660	OK
						V/C	0.37

Maryland State Highway Administration
Turning Movement Summary and
Level of Service

Count Date:
Conditions: Future SATURDAY
Design Year: 2042

Location: Old Georgetown @ Nebel
Computed By: LL
Date: 3/28/14

Montgomery County Method

Morning Peak Hour 7:15-8:15 am

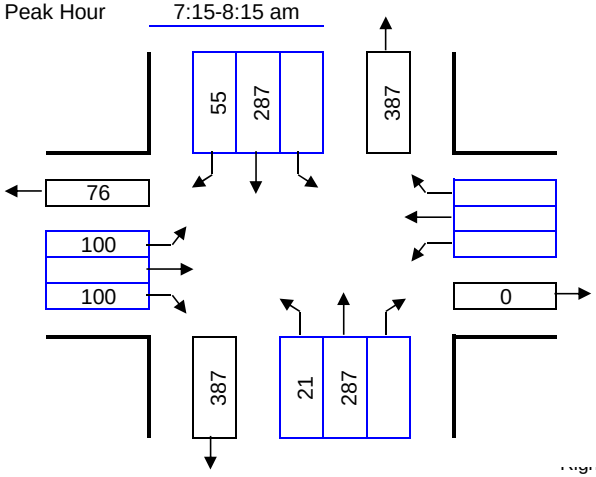

Lane Configuration

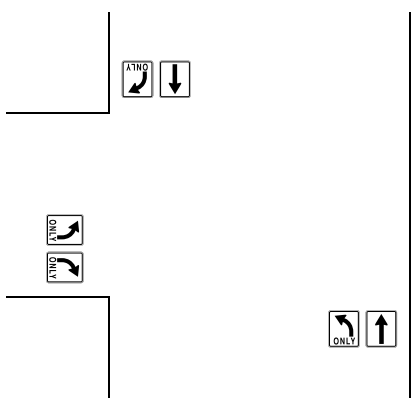

Evening Peak Hour 5:00-6:00 pm

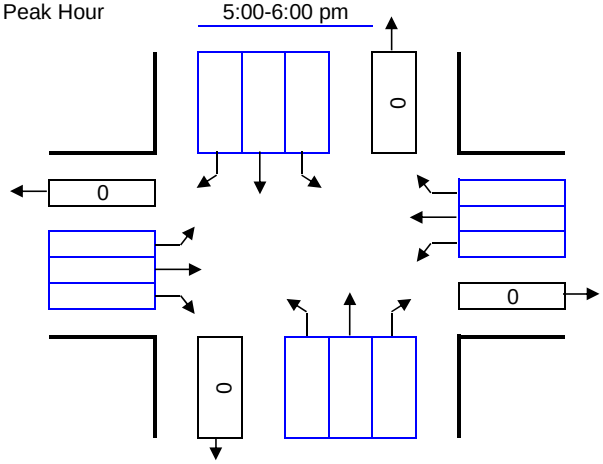

Right Turns Subtracted for Exclusive Right Turn Overlap Phasing or Right Turn on Red and Free Rights:

	AM	PM
NB Approach:	NB	NB
SB Approach:	SB	SB
EB Approach:	EB	EB
WB Approach:	WB	WB

Number of Lanes	Lane Use Factor		Opposing Volume (vph)		PCE
1 =	1.00	Congestion Standard	≤	199	1.1
2 =	0.53	= 1800	≤	599	2.0
3 =	0.37	for	≤	799	3.0
4 =	0.30	White Flint	≤	999	4.0
Dbl-left	0.60	Policy Area	≥	1000	5.0

Movement	Volume	PCE	Lane Use Factor	Lane Volume	Opposing Lefts	Critical Lane Volume	*
NBT	287	1.00	1.00	287	0	287	
SBT + NBL	287	1.00	1.00	287	21	308	*
EBL	100	1.00	1.00	100	0	100	*
					Critical Volume	408	OK
						V/C	0.23

Movement	Volume	PCE	Lane Use Factor	Lane Volume	Opposing Lefts	Critical Lane Volume	*
					Critical Volume	0	OK
						V/C	0.00

Maryland State Highway Administration
Turning Movement Summary and
Level of Service

Count Date:
Conditions: Future
Design Year: 2042

Location: Old Georgetown Road @ Nicholson Ln
Computed By: BJM
Date: 3/28/14

Montgomery County Method

Morning Peak Hour 7:00-8:00 am

Lane Configuration

Evening Peak Hour 5:00-6:00 pm

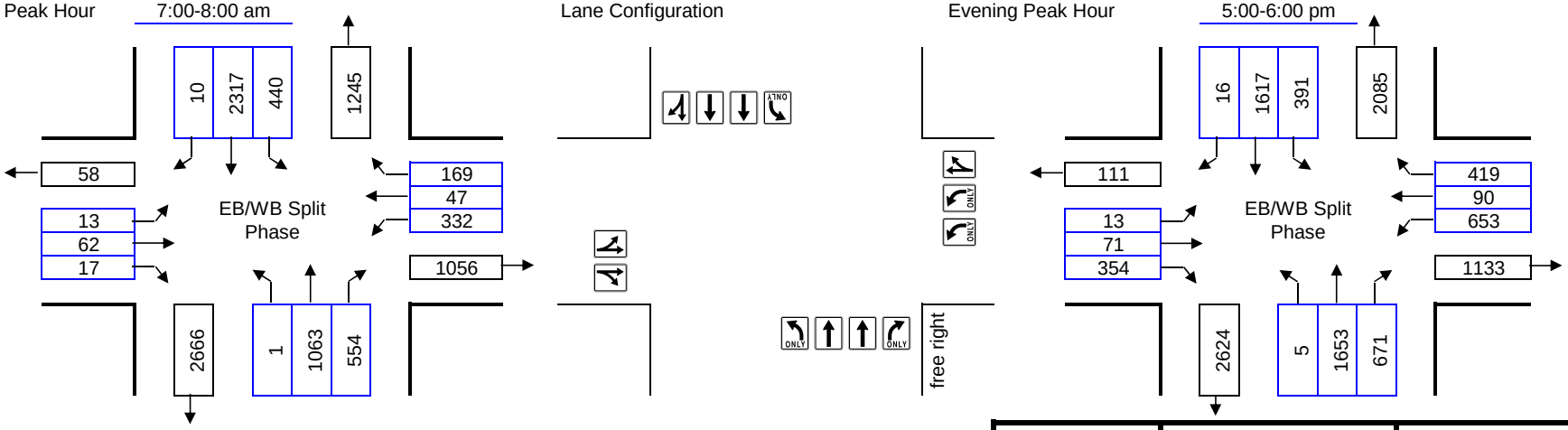

Right Turns Subtracted for Exclusive Right Turn Overlap Phasing or Right Turn on Red:

	AM	PM
NB Approach:	NB	NB
SB Approach:	SB	SB
EB Approach:	EB	EB 4
WB Approach:	WB	WB

Number of Lanes	Lane Use Factor		Opposing Volume (vph)		PCE
1 =	1.00	Congestion Standard	≤	199	1.1
2 =	0.53	= 1800	≤	599	2.0
3 =	0.37	for	≤	799	3.0
4 =	0.30	White Flint	≤	999	4.0
Dbl-left	0.60	Policy Area	≥	1000	5.0

Movement	Volume	PCE	Lane Use Factor	Lane Volume	Opposing Lefts	Critical Lane Volume	*
NBT + SBL	1063	1.00	0.53	563	440	1003	*
SBTR + NBL	2327	1.00	0.37	861	1	862	
EBLTR	92	1.00	0.53	49	0	49	*
WBTR	216	1.00	1.00	216	0	216	*
					Critical Volume	1268	OK
					V/C	0.70	

Movement	Volume	PCE	Lane Use Factor	Lane Volume	Opposing Lefts	Critical Lane Volume	*
NBT + SBL	1653	1.00	0.53	876	391	1267	*
SBTR + NBL	1633	1.00	0.37	604	5	609	
EBR	350	1.00	1.00	350	0	350	*
WBTR	509	1.00	1.00	509	0	509	*
					Critical Volume	2126	F
					V/C	1.18	

De facto RT lane(s) assumed for EB approach.

Maryland State Highway Administration
Turning Movement Summary and
Level of Service

Count Date:
Conditions: Future SATURDAY
Design Year: 2042

Location: Old Georgetown Road @ Nicholson Ln
Computed By: LL
Date: 3/28/14

Montgomery County Method

Morning Peak Hour 7:00-8:00 am

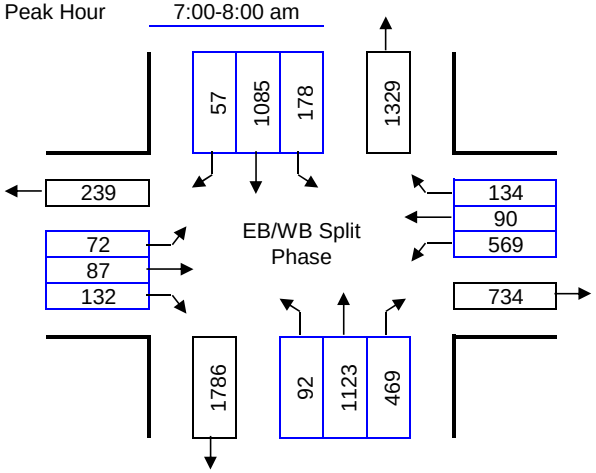

Lane Configuration

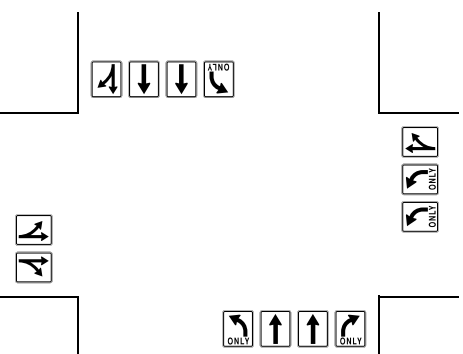

Evening Peak Hour 5:00-6:00 pm

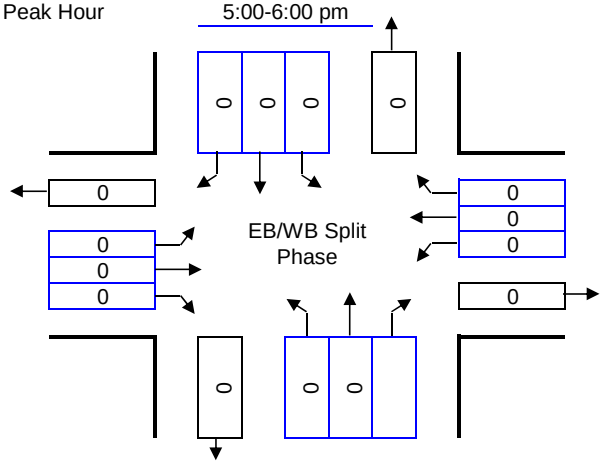

Right Turns Subtracted for Exclusive Right Turn Overlap Phasing or Right Turn on Red:

	AM	PM
NB Approach:	NB	NB
SB Approach:	SB	SB
EB Approach:	EB	EB
WB Approach:	WB	WB

Number of Lanes	Lane Use Factor		Opposing Volume (vph)		PCE
1 =	1.00	Congestion Standard	≤	199	1.1
2 =	0.53	= 1800	≤	599	2.0
3 =	0.37	for	≤	799	3.0
4 =	0.30	White Flint	≤	999	4.0
Dbl-left	0.60	Policy	≥	1000	5.0
		Area			

Movement	Volume	PCE	Lane Use Factor	Lane Volume	Opposing Lefts	Critical Lane Volume	*
NBT + SBL	1123	1.00	0.53	595	178	773	*
SBTR + NBL	1142	1.00	0.37	423	92	515	
EBLTR	291	1.00	0.53	154	0	154	*
WBL	569	1.00	0.60	341	0	341	*
					Critical Volume	1268	OK
					V/C	0.70	

Movement	Volume	PCE	Lane Use Factor	Lane Volume	Opposing Lefts	Critical Lane Volume	*
					Critical Volume	0	OK
					V/C	0.00	

Maryland State Highway Administration
Turning Movement Summary and
Level of Service

Count Date:
Conditions: Future
Design Year: 2042

Location: Nicholson Ln @ Executive Blvd.
Computed By: BJM
Date: 3/28/14

Montgomery County Method

Morning Peak Hour 7:00-8:00 am

Lane Configuration

Evening Peak Hour 5:00-6:00 pm

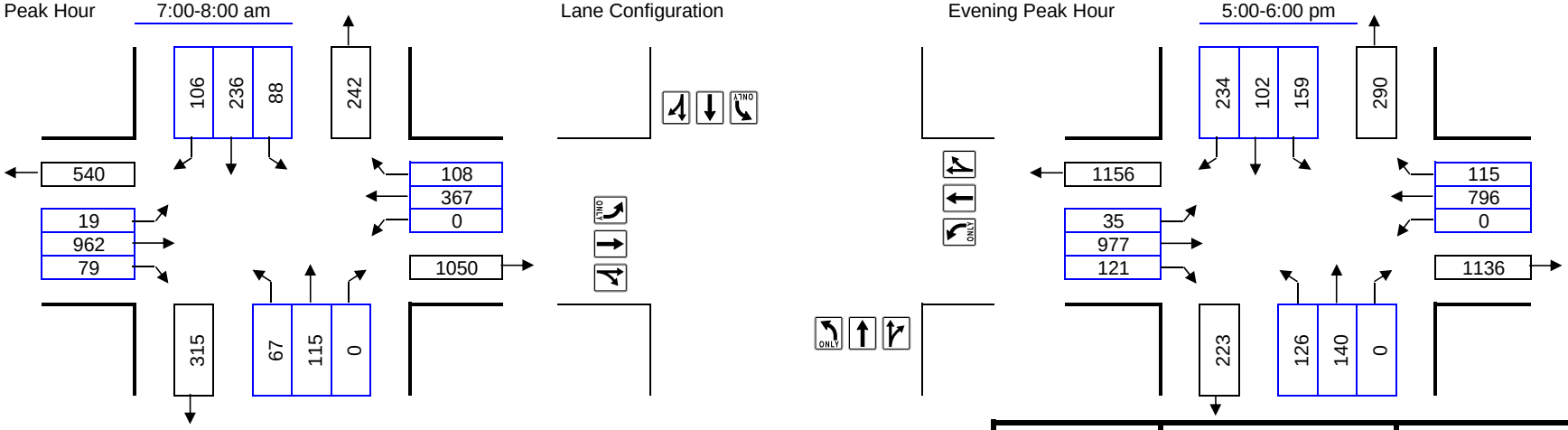

Right Turns Subtracted for Exclusive Right Turn Overlap Phasing or Right Turn on Red:

	AM	PM
NB Approach:	NB	NB
SB Approach:	SB	SB 35
EB Approach:	EB	EB
WB Approach:	WB	WB

Number of Lanes	Lane Use Factor		Opposing Volume (vph)		PCE
1 =	1.00	Congestion Standard	≤	199	1.1
2 =	0.53	= 1800	≤	599	2.0
3 =	0.37	for	≤	799	3.0
4 =	0.30	White Flint	≤	999	4.0
Dbl-left	0.60	Policy Area	≥	1000	5.0

Movement	Volume	PCE	Lane Use Factor	Lane Volume	Opposing Lefts	Critical Lane Volume	*
NBT + SBL	115	1.00	0.53	61	88	149	
SBTR + NBL	342	1.00	0.53	181	67	248	*
EBTR	1041	1.00	0.53	552	0	552	*
WBTR + EBL	475	1.00	0.53	252	19	271	
					Critical Volume	800	OK
					V/C	0.44	

Movement	Volume	PCE	Lane Use Factor	Lane Volume	Opposing Lefts	Critical Lane Volume	*
NBT + SBL	140	1.00	0.53	74	159	233	
SBR + NBL	199	1.00	1.00	199	126	325	*
EBTR	1098	1.00	0.53	582	0	582	*
WBTR + EBL	911	1.00	0.53	483	35	518	
					Critical Volume	907	OK
					V/C	0.50	

De facto RT lane(s) assumed for SB approach.

Maryland State Highway Administration
Turning Movement Summary and
Level of Service

Count Date:
Conditions: Future SATURDAY
Design Year: 2042

Location: Nicholson Ln @ Executive Blvd.
Computed By: LL
Date: 3/28/14

Montgomery County Method

Morning Peak Hour 7:00-8:00 am

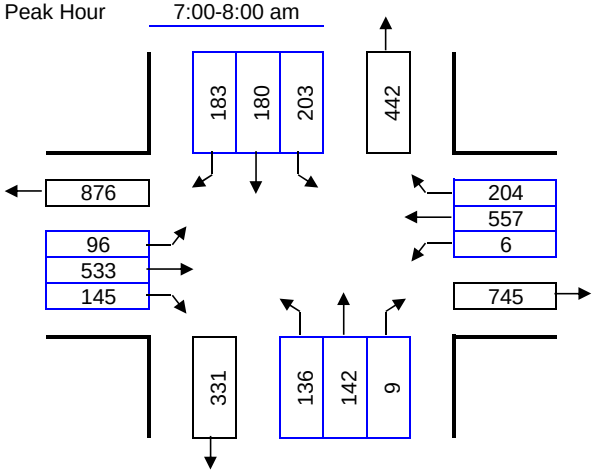

Lane Configuration

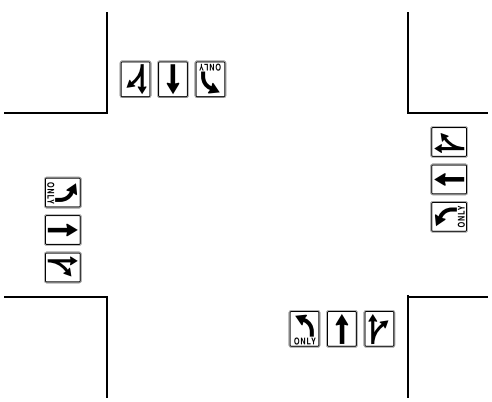

Evening Peak Hour 5:00-6:00 pm

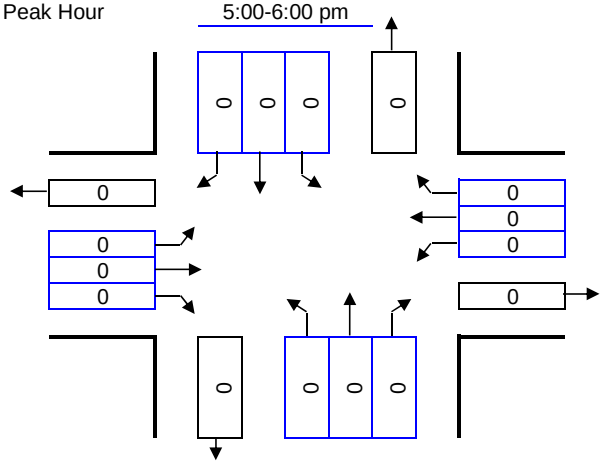

Right Turns Subtracted for Exclusive Right Turn Overlap Phasing or Right Turn on Red:

	AM	PM
NB Approach:	NB	NB
SB Approach:	SB	SB
EB Approach:	EB	EB
WB Approach:	WB	WB

Number of Lanes	Lane Use Factor		Opposing Volume (vph)		PCE
1 =	1.00	Congestion Standard	≤	199	1.1
2 =	0.53	= 1800	≤	599	2.0
3 =	0.37	for	≤	799	3.0
4 =	0.30	White Flint	≤	999	4.0
Dbl-left	0.60	Policy Area	≥	1000	5.0

Movement	Volume	PCE	Lane Use Factor	Lane Volume	Opposing Lefts	Critical Lane Volume	*
NBTR + SBL	151	1.00	0.53	80	203	283	
SBTR + NBL	363	1.00	0.53	192	136	328	*
EBTR + WBL	678	1.00	0.53	359	6	365	
WBTR + EBL	761	1.00	0.53	403	96	499	*
					Critical Volume	827	OK
					V/C	0.46	

Movement	Volume	PCE	Lane Use Factor	Lane Volume	Opposing Lefts	Critical Lane Volume	*
					Critical Volume	0	OK
					V/C	0.00	

Maryland State Highway Administration
Turning Movement Summary and
Level of Service

Count Date:
Conditions: Future
Design Year: 2042

Location: Nicholson @ Nebel
Computed By: BJM
Date: 3/28/14

Montgomery County Method

Morning Peak Hour 7:15-8:15 am

Lane Configuration

Evening Peak Hour 5:00-6:00 pm

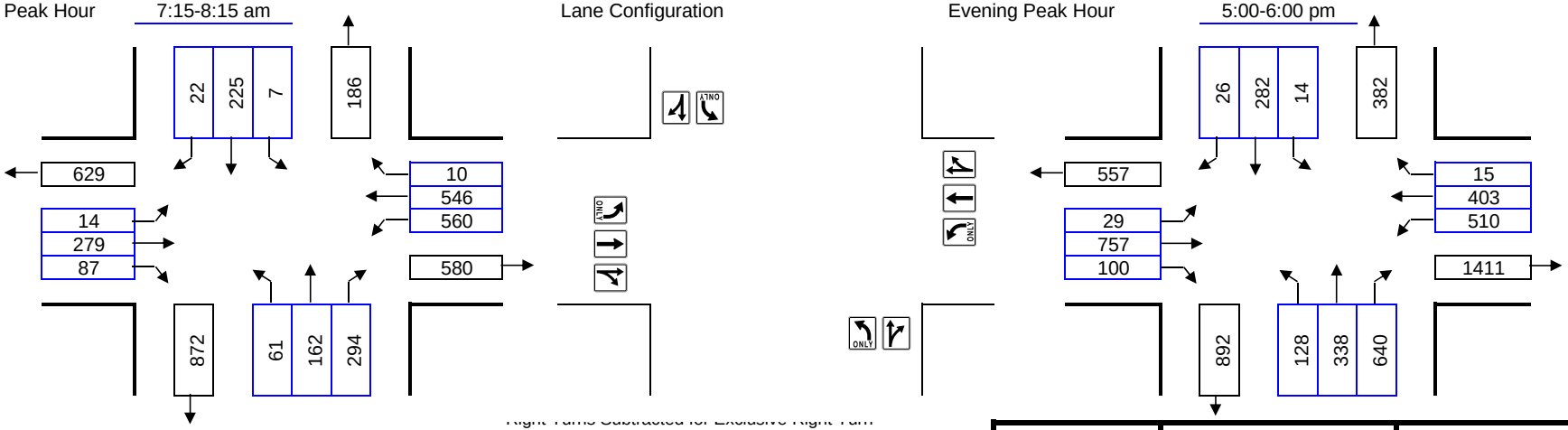

Right Turns Subtracted for Exclusive Right Turn Overlap Phasing or Right Turn on Red and Free Rights:

	AM	PM
NB Approach:	NB	NB
SB Approach:	SB	SB
EB Approach:	EB	EB
WB Approach:	WB	WB

Number of Lanes	Lane Use Factor		Opposing Volume (vph)		PCE
1 =	1.00	Congestion Standard	≤	199	1.1
2 =	0.53	= 1800	≤	599	2.0
3 =	0.37	for	≤	799	3.0
4 =	0.30	White Flint	≤	999	4.0
Dbl-left	0.60	Policy Area	≥	1000	5.0

Movement	Volume	PCE	Lane Use Factor	Lane Volume	Opposing Lefts	Critical Lane Volume	*
NBTR + SBL	456	1.00	1.00	456	7	463	*
SBTR + NBL	247	1.00	1.00	247	61	308	
EBTR + WBL	366	1.00	0.53	194	560	754	*
WBTR + EBL	556	1.00	0.53	295	14	309	
					Critical Volume	1217	OK
					V/C	0.68	

Movement	Volume	PCE	Lane Use Factor	Lane Volume	Opposing Lefts	Critical Lane Volume	*
NBTR + SBL	978	1.00	1.00	978	14	992	*
SBTR + NBL	308	1.00	1.00	308	128	436	
EBTR + WBL	857	1.00	0.53	454	510	964	*
WBTR + EBL	418	1.00	0.53	222	29	251	
					Critical Volume	1956	F
					V/C	1.09	

Maryland State Highway Administration
Turning Movement Summary and
Level of Service

Count Date:
Conditions: Future SATURDAY
Design Year: 2042

Location: Nicholson @ Nebel
Computed By: LL
Date: 3/28/14

Montgomery County Method

Morning Peak Hour 7:15-8:15 am

Lane Configuration

Evening Peak Hour 5:00-6:00 pm

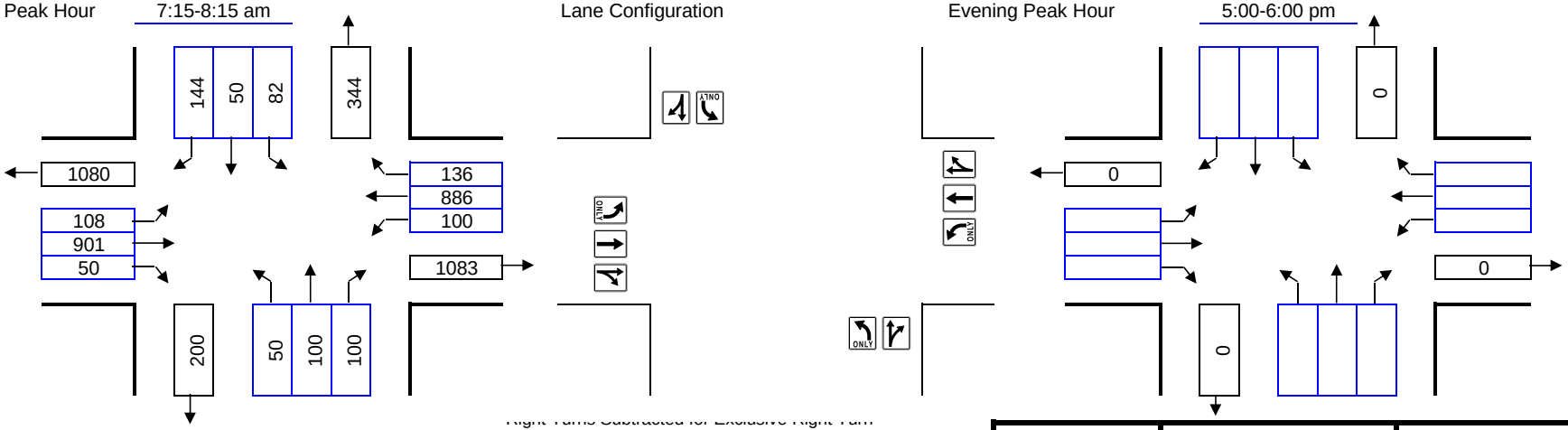

Right Turns Subtracted for Exclusive Right Turn Overlap Phasing or Right Turn on Red and Free Rights:

	AM	PM
NB Approach:	NB	NB
SB Approach:	SB	SB
EB Approach:	EB	EB
WB Approach:	WB	WB

Number of Lanes	Lane Use Factor		Opposing Volume (vph)		PCE
1 =	1.00	Congestion Standard	≤	199	1.1
2 =	0.53	= 1800	≤	599	2.0
3 =	0.37	for	≤	799	3.0
4 =	0.30	White Flint	≤	999	4.0
Dbl-left	0.60	Policy Area	≥	1000	5.0

Movement	Volume	PCE	Lane Use Factor	Lane Volume	Opposing Lefts	Critical Lane Volume	*
NBTR + SBL	200	1.00	1.00	200	82	282	*
SBTR + NBL	194	1.00	1.00	194	50	244	
EBTR + WBL	951	1.00	0.53	504	100	604	
WBTR + EBL	1022	1.00	0.53	542	108	650	*
					Critical Volume	932	OK
					V/C	0.52	

Movement	Volume	PCE	Lane Use Factor	Lane Volume	Opposing Lefts	Critical Lane Volume	*
					Critical Volume	0	OK
					V/C	0.00	

Maryland State Highway Administration
Turning Movement Summary and
Level of Service

Count Date:
Conditions: Future
Design Year: 2042

Location: Old Georgetown Rd @ Poindexter Ln
Computed By: BJM
Date: 3/28/14

Montgomery County Method

Morning Peak Hour 7:00-8:00 am

Lane Configuration

Evening Peak Hour 5:00-6:00 pm

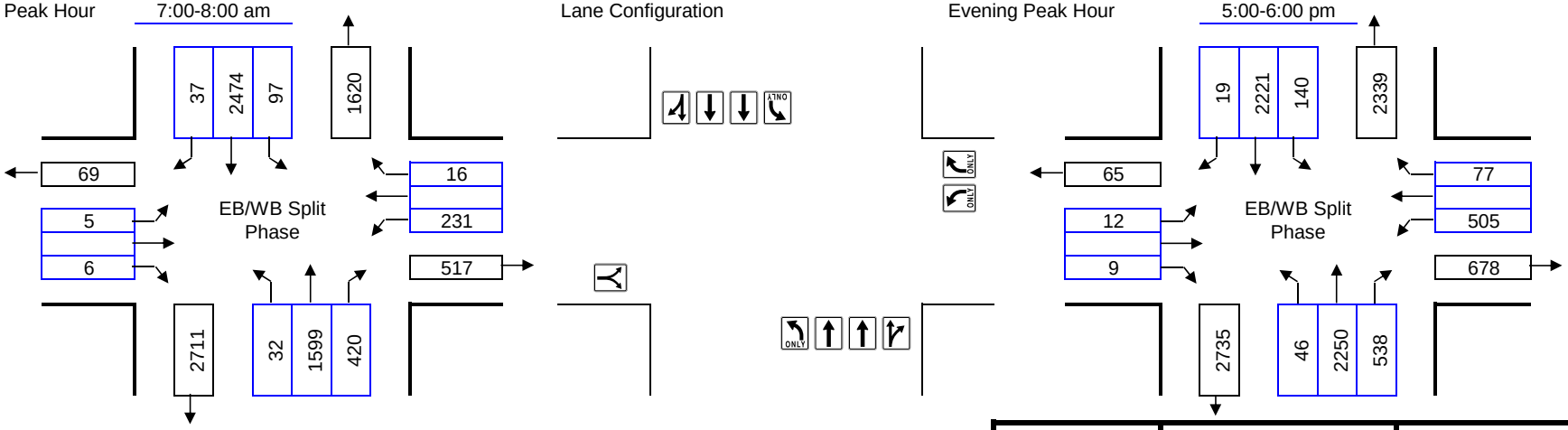

Right Turns Subtracted for Exclusive Right Turn Overlap Phasing or Right Turn on Red:

	AM	PM
NB Approach:	NB	NB
SB Approach:	SB	SB
EB Approach:	EB	EB
WB Approach:	WB	WB

Number of Lanes	Lane Use Factor		Opposing Volume (vph)		PCE
1 =	1.00	Congestion Standard	≤	199	1.1
2 =	0.53	= 1550	≤	599	2.0
3 =	0.37	for	≤	799	3.0
4 =	0.30	North Bethesda	≤	999	4.0
Dbl-left	0.60	Policy	≥	1000	5.0
		Area			

Movement	Volume	PCE	Lane Use Factor	Lane Volume	Opposing Lefts	Critical Lane Volume	*
NBTR + SBL	2019	1.00	0.37	747	97	844	
SBTR + NBL	2511	1.00	0.37	929	32	961	*
EBLR	11	1.00	1.00	11	0	11	*
WBL	231	1.00	1.00	231	0	231	*
					Critical Volume	1203	OK
					V/C	0.78	

Movement	Volume	PCE	Lane Use Factor	Lane Volume	Opposing Lefts	Critical Lane Volume	*
NBTR + SBL	2788	1.00	0.37	1032	140	1172	*
SBTR + NBL	2240	1.00	0.37	829	46	875	
EBLR	21	1.00	1.00	21	0	21	*
WBL	505	1.00	1.00	505	0	505	*
					Critical Volume	1698	F
					V/C	1.10	

Maryland State Highway Administration
Turning Movement Summary and
Level of Service

Count Date:
Conditions: Future SATURDAY
Design Year: 2042

Location: Old Georgetown Rd @ Poindexter Ln
Computed By: LL
Date: 3/28/14

Montgomery County Method

Morning Peak Hour 7:00-8:00 am

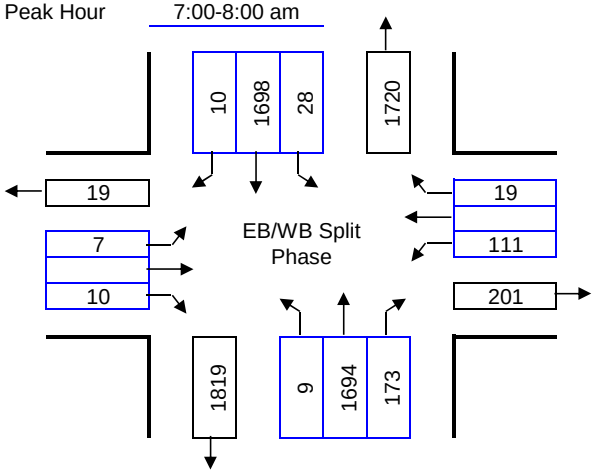

Lane Configuration

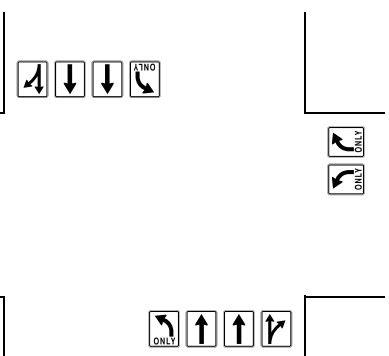

Evening Peak Hour 5:00-6:00 pm

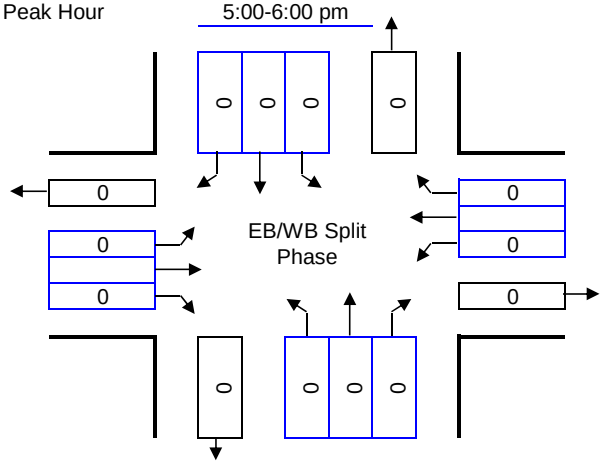

Right Turns Subtracted for Exclusive Right Turn Overlap Phasing or Right Turn on Red:

	AM	PM
NB Approach:	NB	NB
SB Approach:	SB	SB
EB Approach:	EB	EB
WB Approach:	WB	WB

Number of Lanes	Lane Use Factor		Opposing Volume (vph)		PCE
1 =	1.00	Congestion Standard	≤	199	1.1
2 =	0.53	= 1550	≤	599	2.0
3 =	0.37	for	≤	799	3.0
4 =	0.30	North Bethesda	≤	999	4.0
Dbl-left	0.60	Policy	≥	1000	5.0
		Area			

Movement	Volume	PCE	Lane Use Factor	Lane Volume	Opposing Lefts	Critical Lane Volume	*
NBTR + SBL	1867	1.00	0.37	691	28	719	*
SBTR + NBL	1708	1.00	0.37	632	9	641	
EBLR	17	1.00	1.00	17	0	17	*
WBL	111	1.00	1.00	111	0	111	*
					Critical Volume	847	OK
					V/C	0.55	

Movement	Volume	PCE	Lane Use Factor	Lane Volume	Opposing Lefts	Critical Lane Volume	*
					Critical Volume	0	OK
					V/C	0.00	

Maryland State Highway Administration
Turning Movement Summary and
Level of Service

Count Date:
Conditions: Future
Design Year: 2042

Location: Old Georgetown Rd @ Tuckerman Ln
Computed By: BJM
Date: 3/28/14

Montgomery County Method

Morning Peak Hour 7:00-8:00 am

Lane Configuration

Evening Peak Hour 5:00-6:00 pm

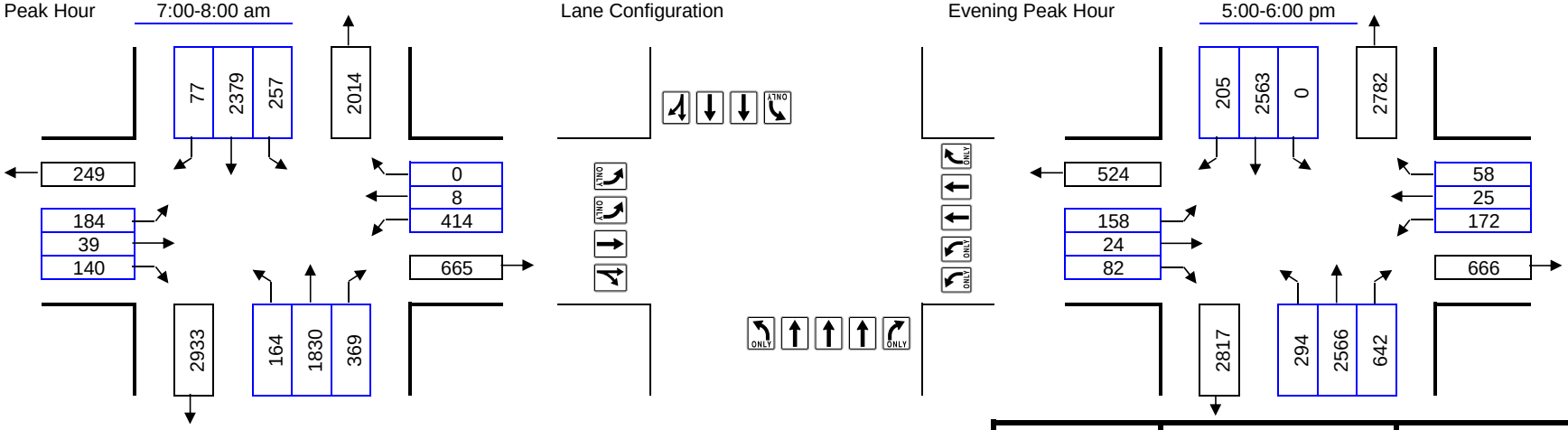

Right Turns Subtracted for Exclusive Right Turn Overlap Phasing or Right Turn on Red:

	AM		PM	
NB Approach:	NB		NB	
SB Approach:	SB		SB	
EB Approach:	EB	0	EB	0
WB Approach:	WB		WB	

Number of Lanes	Lane Use Factor		Opposing Volume (vph)		PCE
1 =	1.00	Congestion Standard	≤	199	1.1
2 =	0.53	= 1550	≤	599	2.0
3 =	0.37	for	≤	799	3.0
4 =	0.30	North Bethesda	≤	999	4.0
Dbl-left	0.60	Policy	≥	1000	5.0
		Area			

Movement	Volume	PCE	Lane Use Factor	Lane Volume	Opposing Lefts	Critical Lane Volume	*
NBT + SBL	1830	1.00	0.37	677	257	934	
SBTR + NBL	2456	1.00	0.37	909	164	1073	*
EBR + WBL	140	1.00	1.00	140	248	388	*
WBT + EBL	8	1.00	0.53	4	110	114	
					Critical Volume	1461	OK
					V/C	0.94	

De facto RT lane(s) assumed for EB approach.

Movement	Volume	PCE	Lane Use Factor	Lane Volume	Opposing Lefts	Critical Lane Volume	*
NBT	2566	1.00	0.37	949	0	949	
SBTR + NBL	2768	1.00	0.37	1024	294	1318	*
EBR + WBL	82	1.00	1.00	82	103	185	*
WBR + EBL	58	1.00	1.00	58	95	153	
					Critical Volume	1503	OK
					V/C	0.97	

De facto RT lane(s) assumed for EB approach.

Maryland State Highway Administration
Turning Movement Summary and
Level of Service

Count Date:
Conditions: Future SATURDAY
Design Year: 2042

Location: Old Georgetown Rd @ Tuckerman Ln
Computed By: LL
Date: 3/28/14

Montgomery County Method

Morning Peak Hour 7:00-8:00 am

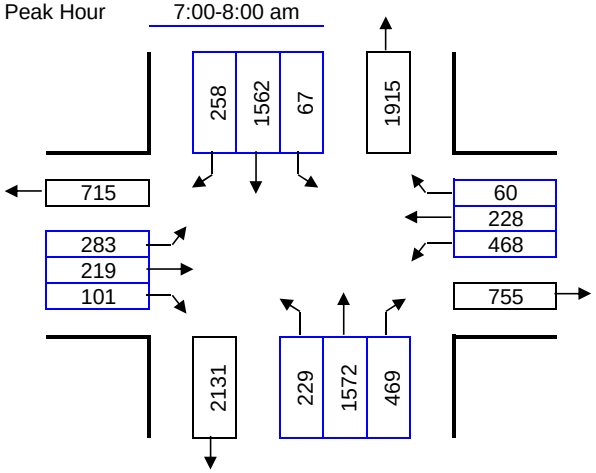

Lane Configuration

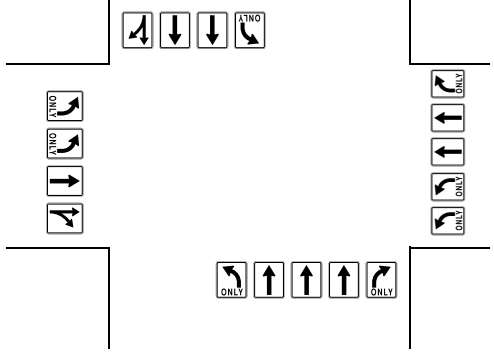

Evening Peak Hour 5:00-6:00 pm

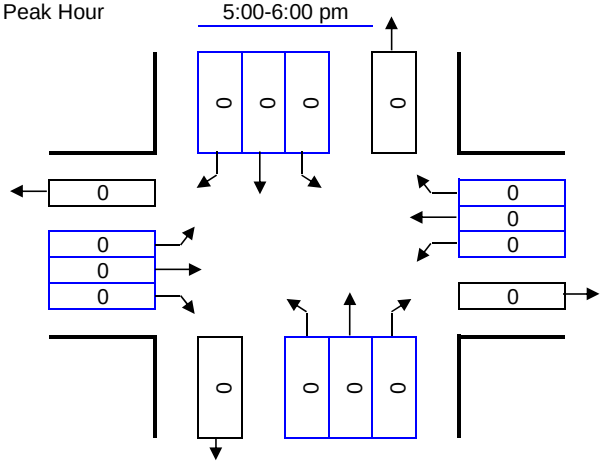

Right Turns Subtracted for Exclusive Right Turn Overlap Phasing or Right Turn on Red:

	AM	PM
NB Approach:	NB	NB
SB Approach:	SB	SB
EB Approach:	EB	EB
WB Approach:	WB	WB

Number of Lanes	Lane Use Factor		Opposing Volume (vph)		PCE
1 =	1.00	Congestion Standard	≤	199	1.1
2 =	0.53	= 1550	≤	599	2.0
3 =	0.37	for	≤	799	3.0
4 =	0.30	North Bethesda	≤	999	4.0
Dbl-left	0.60	Policy	≥	1000	5.0
		Area			

Movement	Volume	PCE	Lane Use Factor	Lane Volume	Opposing Lefts	Critical Lane Volume	*
NBT + SBL	1572	1.00	0.37	582	67	649	
SBTR + NBL	1820	1.00	0.37	673	229	902	*
EBTR + WBL	320	1.00	0.53	170	281	451	*
WBT + EBL	228	1.00	0.53	121	170	291	
					Critical Volume	1353	OK
						V/C	0.87

Movement	Volume	PCE	Lane Use Factor	Lane Volume	Opposing Lefts	Critical Lane Volume	*
					Critical Volume	0	OK
						V/C	0.00

Maryland State Highway Administration
Turning Movement Summary and
Level of Service

Count Date:
Conditions: Future
Design Year: 2042

Location: Old Georgetown @ 270 NB Ramp
Computed By: BJM
Date: 3/28/14

Montgomery County Method

Morning Peak Hour 7:15-8:15 am

Lane Configuration

Evening Peak Hour 5:00-6:00 pm

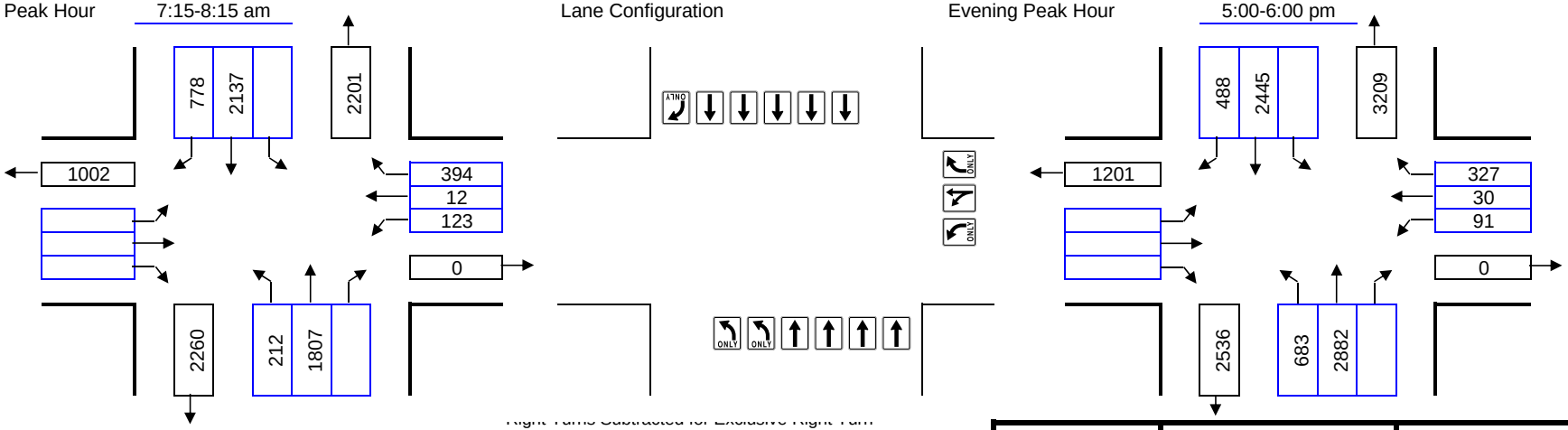

Right Turns Subtracted for Exclusive Right Turn Overlap Phasing or Right Turn on Red and Free Rights:

	AM	PM
NB Approach:	NB	NB
SB Approach:	SB	SB
EB Approach:	EB	EB
WB Approach:	WB	WB

Number of Lanes	Lane Use Factor		Opposing Volume (vph)		PCE
1 =	1.00	Congestion Standard	≤	199	1.1
2 =	0.53	= 1550	≤	599	2.0
3 =	0.37	for	≤	799	3.0
4 =	0.30	North Bethesda	≤	999	4.0
Dbl-left	0.60	Policy	≥	1000	5.0
		Area			

Movement	Volume	PCE	Lane Use Factor	Lane Volume	Opposing Lefts	Critical Lane Volume	*
NBT	1807	1.00	0.30	542	0	542	
SBR + NBL	778	1.00	1.00	778	127	905	*
WBR	394	1.00	1.00	394	0	394	*
					Critical Volume	1299	OK
						V/C	0.84

Movement	Volume	PCE	Lane Use Factor	Lane Volume	Opposing Lefts	Critical Lane Volume	*
NBT	2882	1.00	0.30	865	0	865	
SBT + NBL	2445	1.00	0.25	611	410	1021	*
WBR	327	1.00	1.00	327	0	327	*
					Critical Volume	1348	OK
						V/C	0.87

Maryland State Highway Administration
Turning Movement Summary and Level of Service

Count Date:
Conditions: Future SATURDAY
Design Year: 2042

Location: Old Georgetown @ 270 NB Ramp
Computed By: LL
Date: 3/28/14

Montgomery County Method

Morning Peak Hour 7:15-8:15 am

Lane Configuration

Evening Peak Hour 5:00-6:00 pm

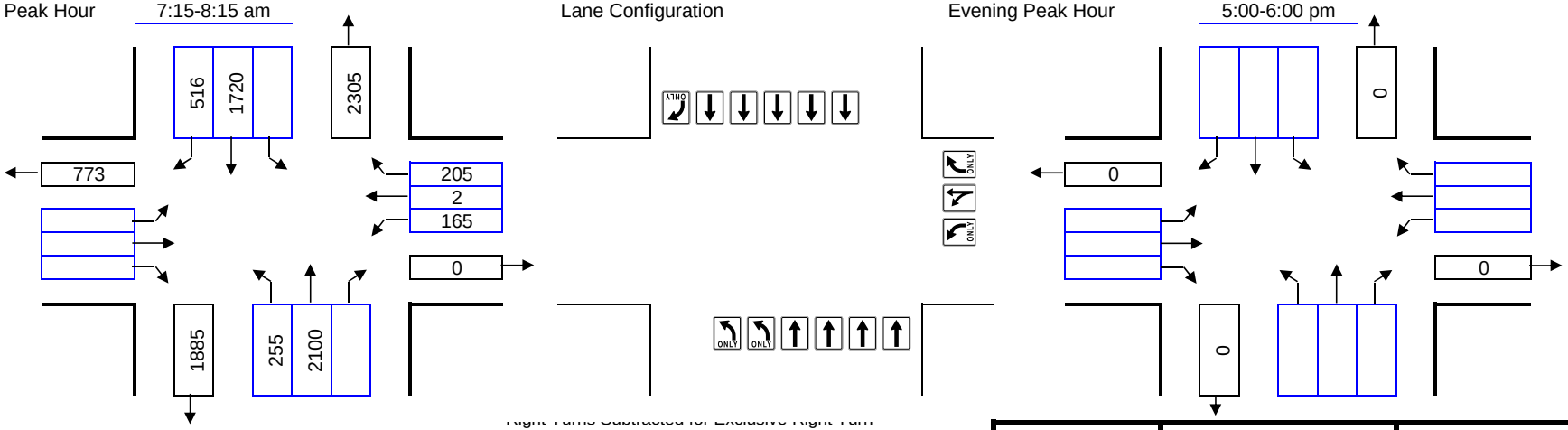

Right Turns Subtracted for Exclusive Right Turn Overlap Phasing or Right Turn on Red and Free Rights:

	AM	PM
NB Approach:	NB	NB
SB Approach:	SB	SB
EB Approach:	EB	EB
WB Approach:	WB	WB

Number of Lanes	Lane Use Factor		Opposing Volume (vph)		PCE
1 =	1.00	Congestion Standard	≤	199	1.1
2 =	0.53	= 1550	≤	599	2.0
3 =	0.37	for	≤	799	3.0
4 =	0.30	North Bethesda	≤	999	4.0
Dbl-left	0.60	Policy	≥	1000	5.0
		Area			

Movement	Volume	PCE	Lane Use Factor	Lane Volume	Opposing Lefts	Critical Lane Volume	*
NBT	2100	1.00	0.30	630	0	630	
SBR + NBL	516	1.00	1.00	516	153	669	*
WBR	205	1.00	1.00	205	0	205	*
					Critical Volume	874	OK
					V/C	0.56	

Movement	Volume	PCE	Lane Use Factor	Lane Volume	Opposing Lefts	Critical Lane Volume	*
					Critical Volume	0	OK
					V/C	0.00	

Maryland State Highway Administration
Turning Movement Summary and
Level of Service

Count Date:
Conditions: Future
Design Year: 2042

Location: Old Georgetown @ 270 SB Ramp
Computed By: BJM
Date: 3/28/14

Montgomery County Method

Morning Peak Hour 7:15-8:15 am

Lane Configuration

Evening Peak Hour 5:00-6:00 pm

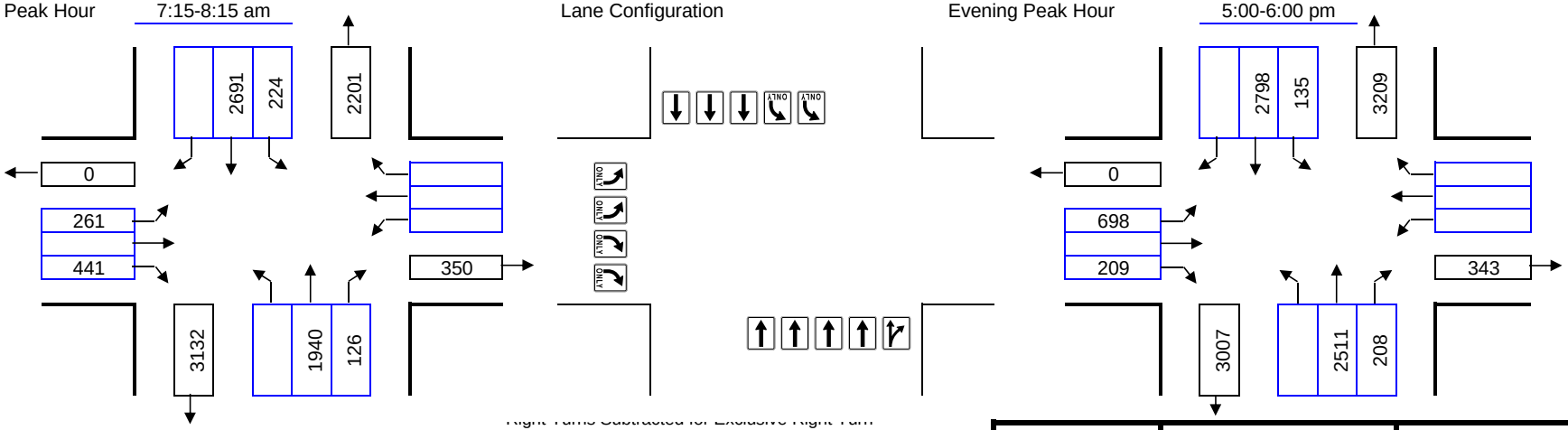

Overlap Phasing or Right Turn on Red and Free Rights:

	AM	PM
NB Approach:	NB	NB
SB Approach:	SB	SB
EB Approach:	EB	EB
WB Approach:	WB	WB

Number of Lanes	Lane Use Factor		Opposing Volume (vph)		PCE
1 =	1.00	Congestion Standard	≤	199	1.1
2 =	0.53	= 1550	≤	599	2.0
3 =	0.37	for	≤	799	3.0
4 =	0.30	North Bethesda	≤	999	4.0
Dbl-left	0.60	Policy	≥	1000	5.0
		Area			

Movement	Volume	PCE	Lane Use Factor	Lane Volume	Opposing Lefts	Critical Lane Volume	*
NBTR + SBL	2066	1.00	0.25	517	134	651	
SBT	2691	1.00	0.37	996	0	996	*
EBR	441	1.00	0.53	234	0	234	*
					Critical Volume	1230	OK
					V/C	0.79	

Movement	Volume	PCE	Lane Use Factor	Lane Volume	Opposing Lefts	Critical Lane Volume	*
NBTR + SBL	2719	1.00	0.25	680	81	761	
SBT	2798	1.00	0.37	1035	0	1035	*
EBL	698	1.00	0.60	419	0	419	*
					Critical Volume	1454	OK
					V/C	0.94	

Maryland State Highway Administration
Turning Movement Summary and
Level of Service

Count Date:
Conditions: Future SATURDAY
Design Year: 2042

Location: Old Georgetown @ 270 SB Ramp
Computed By: LL
Date: 3/28/14

Montgomery County Method

Morning Peak Hour 7:15-8:15 am

Lane Configuration

Evening Peak Hour 5:00-6:00 pm

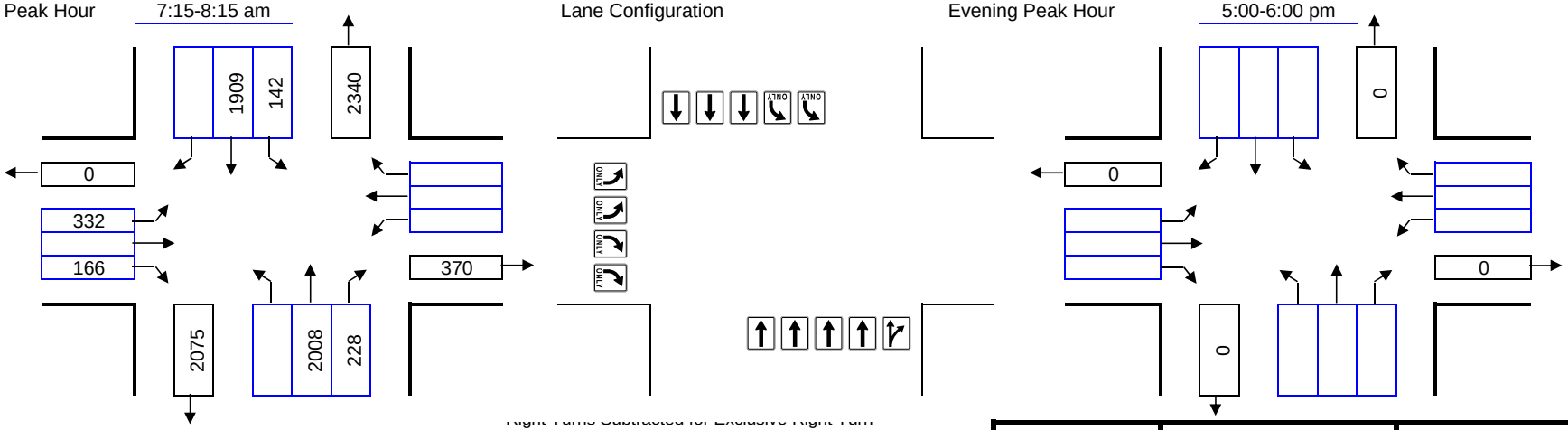

Right Turns Subtracted for Exclusive Right Turn Overlap Phasing or Right Turn on Red and Free Rights:

	AM	PM
NB Approach:	NB	NB
SB Approach:	SB	SB
EB Approach:	EB	EB
WB Approach:	WB	WB

Number of Lanes	Lane Use Factor		Opposing Volume (vph)		PCE
1 =	1.00	Congestion Standard	≤	199	1.1
2 =	0.53	= 1550	≤	599	2.0
3 =	0.37	for	≤	799	3.0
4 =	0.30	North Bethesda	≤	999	4.0
Dbl-left	0.60	Policy	≥	1000	5.0
		Area			

Movement	Volume	PCE	Lane Use Factor	Lane Volume	Opposing Lefts	Critical Lane Volume	*
NBTR + SBL	2236	1.00	0.25	559	85	644	
SBT	1909	1.00	0.37	706	0	706	*
EBL	332	1.00	0.60	199	0	199	*
					Critical Volume	905	OK
						V/C	0.58

Movement	Volume	PCE	Lane Use Factor	Lane Volume	Opposing Lefts	Critical Lane Volume	*
					Critical Volume	0	OK
						V/C	0.00

Maryland State Highway Administration
Turning Movement Summary and
Level of Service

Count Date:
Conditions: Future
Design Year: 2042

Location: Hoya @ Midpike
Computed By: BJM
Date: 4/4/14

Montgomery County Method

Morning Peak Hour 7:15-8:15 am

Lane Configuration

Evening Peak Hour 5:00-6:00 pm

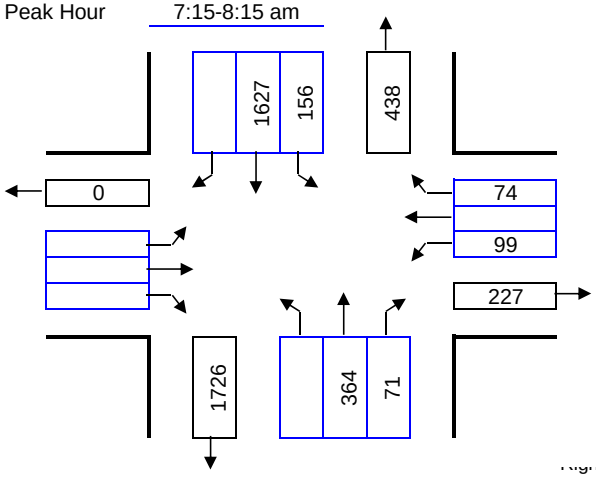

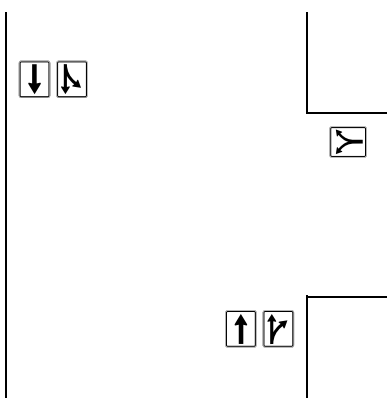

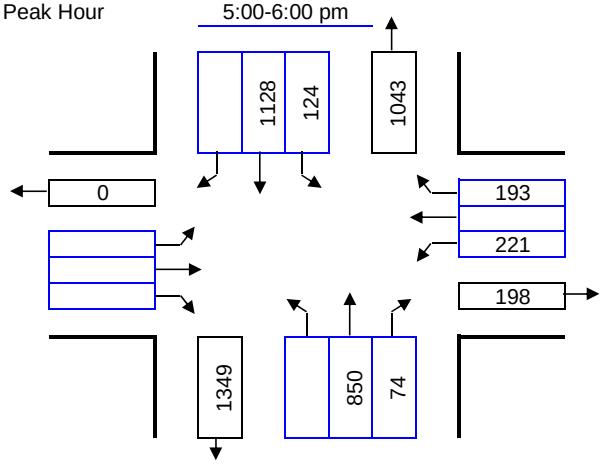

Right Turns Subtracted for Exclusive Right Turn Overlap Phasing or Right Turn on Red and Free Rights:

	AM	PM
NB Approach:	NB	NB
SB Approach:	SB	SB
EB Approach:	EB	EB
WB Approach:	WB	WB

Number of Lanes	Lane Use Factor		Opposing Volume (vph)	PCE
1 =	1.00	Congestion Standard	≤ 199	1.1
2 =	0.53	= 1800	≤ 599	2.0
3 =	0.37	for	≤ 799	3.0
4 =	0.30	White Flint	≤ 999	4.0
Dbl-left	0.60	Policy	≥ 1000	5.0
		Area		

Movement	Volume	PCE	Lane Use Factor	Lane Volume	Opposing Lefts	Critical Lane Volume	*
NBTR + SBL	435	1.00	0.53	231	156	387	
SBLT	1783	1.00	0.53	945	0	945	*
WBLR	173	1.00	1.00	173	0	173	*
					Critical Volume	1118	OK
					V/C	0.62	

Movement	Volume	PCE	Lane Use Factor	Lane Volume	Opposing Lefts	Critical Lane Volume	*
NBTR + SBL	924	1.00	0.53	490	124	614	
SBLT	1252	1.00	0.53	664	0	664	*
WBLR	414	1.00	1.00	414	0	414	*
					Critical Volume	1078	OK
					V/C	0.60	

Maryland State Highway Administration
Turning Movement Summary and
Level of Service

Count Date:
Conditions: Future SATURDAY
Design Year: 2042

Location: Hoya @ Midpike
Computed By: LL
Date: 4/4/14

Montgomery County Method

Morning Peak Hour 7:15-8:15 am

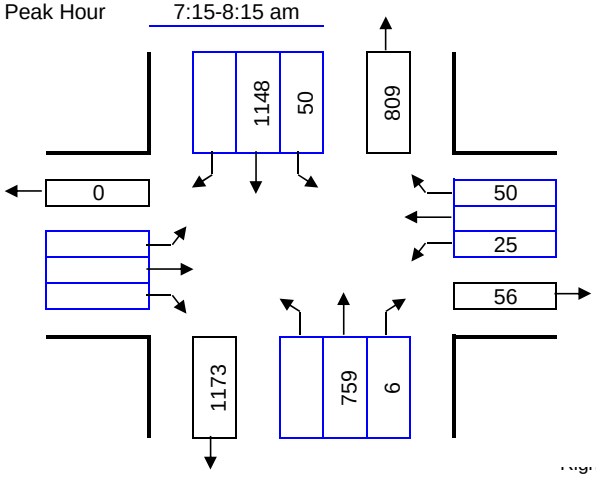

Lane Configuration

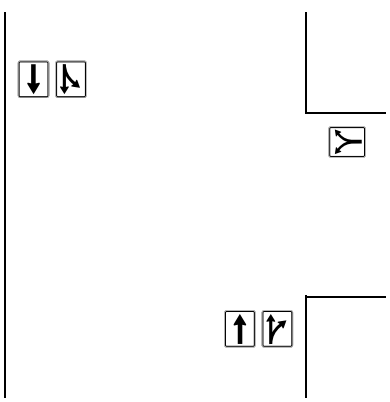

Evening Peak Hour 5:00-6:00 pm

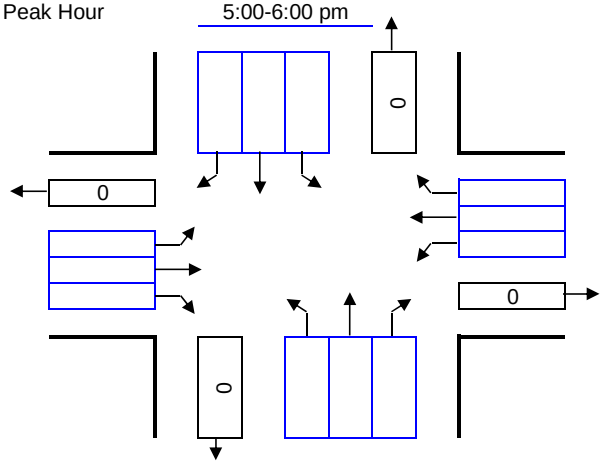

Right Turns Subtracted for Exclusive Right Turn Overlap Phasing or Right Turn on Red and Free Rights:

	AM	PM
NB Approach:	NB	NB
SB Approach:	SB	SB
EB Approach:	EB	EB
WB Approach:	WB	WB

Number of Lanes	Lane Use Factor		Opposing Volume (vph)		PCE
1 =	1.00	Congestion Standard	≤	199	1.1
2 =	0.53	= 1800	≤	599	2.0
3 =	0.37	for	≤	799	3.0
4 =	0.30	White Flint	≤	999	4.0
Dbl-left	0.60	Policy Area	≥	1000	5.0

Movement	Volume	PCE	Lane Use Factor	Lane Volume	Opposing Lefts	Critical Lane Volume	*
NBTR + SBL	765	1.00	0.53	405	50	455	
SBLT	1198	1.00	0.53	635	0	635	*
WBLR	75	1.00	1.00	75	0	75	*
					Critical Volume	710	OK
					V/C	0.39	

Movement	Volume	PCE	Lane Use Factor	Lane Volume	Opposing Lefts	Critical Lane Volume	*
					Critical Volume	0	OK
					V/C	0.00	

Maryland State Highway Administration
Turning Movement Summary and
Level of Service

Count Date:
Conditions: Future
Design Year: 2042

Location: MD 355 @ Mid Pike
Computed By: BJM
Date: 3/28/14

Montgomery County Method

Morning Peak Hour 7:15-8:15 am

Lane Configuration

Evening Peak Hour 5:00-6:00 pm

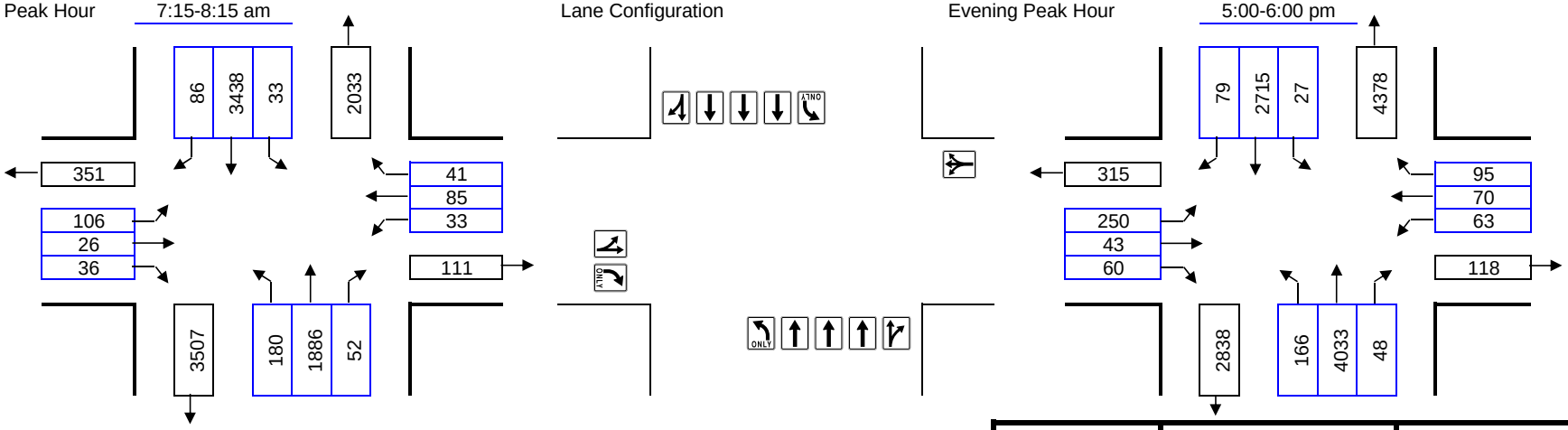

Right Turns Subtracted for Exclusive Right Turn Overlap Phasing or Right Turn on Red:

	AM	PM
NB Approach:	NB	NB
SB Approach:	SB	SB
EB Approach:	EB	EB
WB Approach:	WB	WB

Number of Lanes	Lane Use Factor		Opposing Volume (vph)		PCE
1 =	1.00	Congestion Standard	≤	199	1.1
2 =	0.53	= 1800	≤	599	2.0
3 =	0.37	for	≤	799	3.0
4 =	0.30	White Flint	≤	999	4.0
Dbl-left	0.60	Policy	≥	1000	5.0
		Area			

Movement	Volume	PCE	Lane Use Factor	Lane Volume	Opposing Lefts	Critical Lane Volume	*
NBTR + SBL	1938	1.00	0.30	581	33	614	
SBTR + NBL	3524	1.00	0.30	1057	180	1237	*
EBLT + WBL	132	1.00	1.00	132	33	165	
WBLTR + EBL	159	1.00	1.00	159	106	265	*
					Critical Volume	1502	OK
					V/C	0.83	

Movement	Volume	PCE	Lane Use Factor	Lane Volume	Opposing Lefts	Critical Lane Volume	*
NBTR + SBL	4081	1.00	0.30	1224	27	1251	*
SBTR + NBL	2794	1.00	0.30	838	166	1004	
EBLT + WBL	293	1.00	1.00	293	63	356	
WBLTR + EBL	228	1.00	1.00	228	250	478	*
					Critical Volume	1729	OK
					V/C	0.96	

Maryland State Highway Administration
Turning Movement Summary and
Level of Service

Count Date:
Conditions: Future SATURDAY
Design Year: 2042

Location: MD 355 @ Mid Pike
Computed By: LL
Date: 3/28/14

Montgomery County Method

Morning Peak Hour 7:15-8:15 am

Lane Configuration

Evening Peak Hour 5:00-6:00 pm

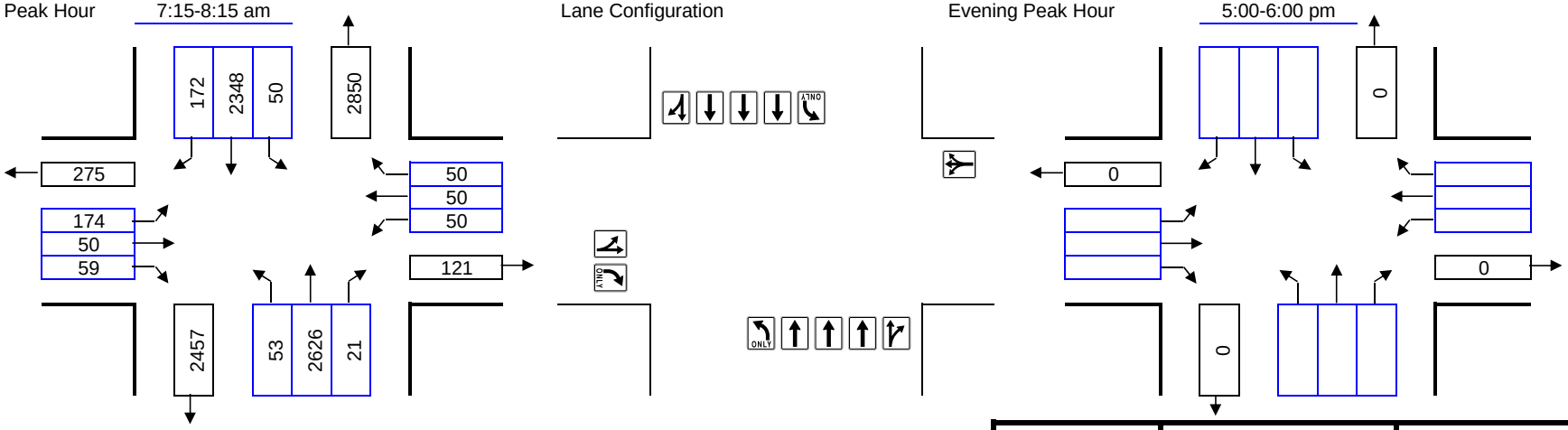

Right Turns Subtracted for Exclusive Right Turn Overlap Phasing or Right Turn on Red:

	AM	PM
NB Approach:	NB	NB
SB Approach:	SB	SB
EB Approach:	EB	EB
WB Approach:	WB	WB

Number of Lanes	Lane Use Factor		Opposing Volume (vph)		PCE
1 =	1.00	Congestion Standard	≤	199	1.1
2 =	0.53	= 1800	≤	599	2.0
3 =	0.37	for	≤	799	3.0
4 =	0.30	White Flint	≤	999	4.0
Dbl-left	0.60	Policy	≥	1000	5.0
		Area			

Movement	Volume	PCE	Lane Use Factor	Lane Volume	Opposing Lefts	Critical Lane Volume	*
NBTR + SBL	2647	1.00	0.30	794	50	844	*
SBTR + NBL	2520	1.00	0.30	756	53	809	
EBLT + WBL	224	1.00	1.00	224	50	274	
WBLTR + EBL	150	1.00	1.00	150	174	324	*
					Critical Volume	1168	OK
					V/C	0.65	

Movement	Volume	PCE	Lane Use Factor	Lane Volume	Opposing Lefts	Critical Lane Volume	*
					Critical Volume	0	OK
					V/C	0.00	

Maryland State Highway Administration
Turning Movement Summary and
Level of Service

Count Date:
Conditions: Future - Volume Update
Design Year: 2042

Location: Old Georgetown @ Main Street/Market Street
Computed By: BJM
Date: 3/28/14

Montgomery County Method

Morning Peak Hour 7:15-8:15 am

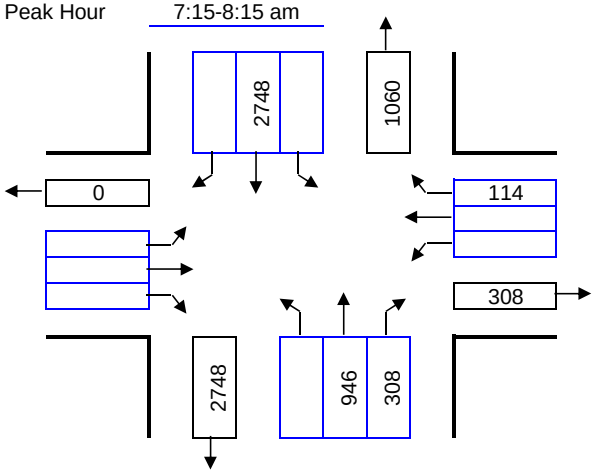

Lane Configuration

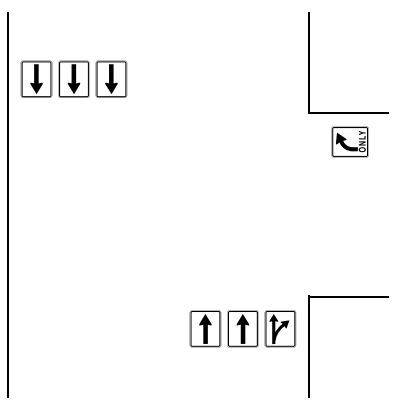

Evening Peak Hour 5:00-6:00 pm

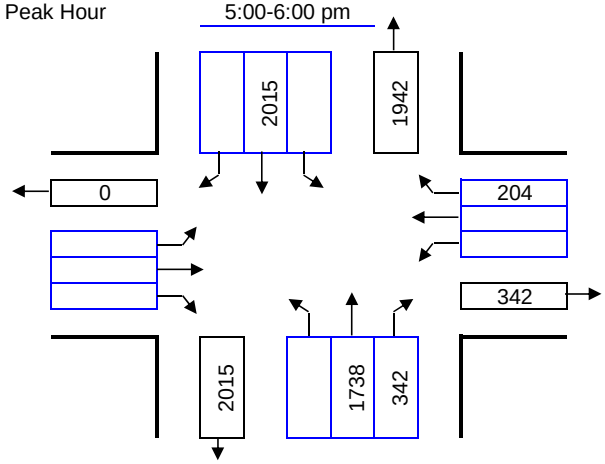

Right Turns Subtracted for Exclusive Right Turn Overlap Phasing or Right Turn on Red:

	AM	PM
NB Approach:	NB	NB
SB Approach:	SB	SB
EB Approach:	EB	EB
WB Approach:	WB	WB

Number of Lanes	Lane Use Factor		Opposing Volume (vph)		PCE
1 =	1.00	Congestion Standard	≤	199	1.1
2 =	0.53	= 1800	≤	599	2.0
3 =	0.37	for	≤	799	3.0
4 =	0.30	White Flint	≤	999	4.0
Dbl-left	0.60	Policy	≥	1000	5.0
		Area			

Movement	Volume	PCE	Lane Use Factor	Lane Volume	Opposing Lefts	Critical Lane Volume	*
NBTR	1254	1.00	0.37	464	0	464	
SBT	2748	1.00	0.37	1017	0	1017	*
WBR	114	1.00	1.00	114	0	114	*
					Critical Volume	1131	OK
						V/C	0.63

Movement	Volume	PCE	Lane Use Factor	Lane Volume	Opposing Lefts	Critical Lane Volume	*
NBTR	2080	1.00	0.37	770	0	770	*
SBT	2015	1.00	0.37	746	0	746	
WBR	204	1.00	1.00	204	0	204	*
					Critical Volume	974	OK
						V/C	0.54

Maryland State Highway Administration
Turning Movement Summary and
Level of Service

Count Date:
Conditions: Future
Design Year: 2042

Location: Old Georgetown @ Main Street/Market Street - Saturday

Computed By: LL Date: 3/28/14

Montgomery County Method

Morning Peak Hour 11:30 am-12:30 pm

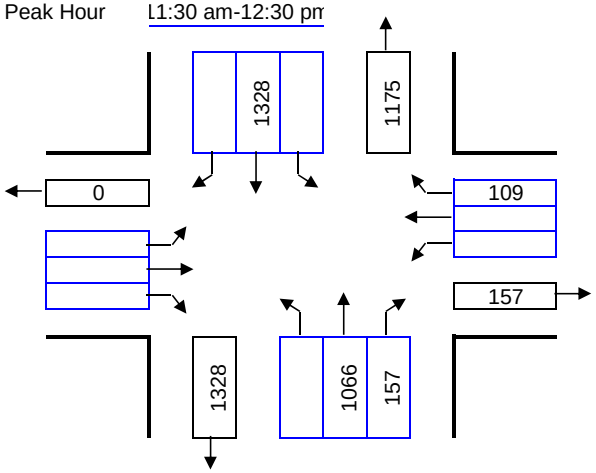

Lane Configuration

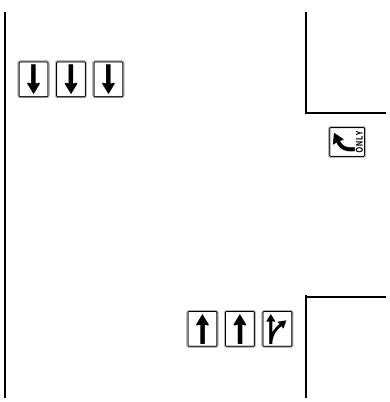

Evening Peak Hour 5:00-6:00 pm

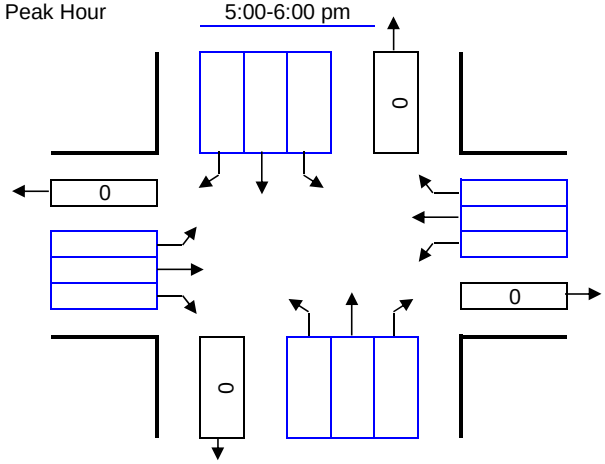

Right Turns Subtracted for Exclusive Right Turn Overlap Phasing or Right Turn on Red:

	AM	PM
NB Approach:	NB	NB
SB Approach:	SB	SB
EB Approach:	EB	EB
WB Approach:	WB	WB

Number of Lanes	Lane Use Factor		Opposing Volume (vph)		PCE
1 =	1.00	Congestion Standard	≤	199	1.1
2 =	0.53	= 1800	≤	599	2.0
3 =	0.37	for	≤	799	3.0
4 =	0.30	White Flint	≤	999	4.0
Dbl-left	0.60	Policy	≥	1000	5.0
		Area			

Movement	Volume	PCE	Lane Use Factor	Lane Volume	Opposing Lefts	Critical Lane Volume	*
NBTR	1223	1.00	0.37	453	0	453	
SBT	1328	1.00	0.37	491	0	491	*
WBR	109	1.00	1.00	109	0	109	*
					Critical Volume	600	OK
						V/C	0.33

Movement	Volume	PCE	Lane Use Factor	Lane Volume	Opposing Lefts	Critical Lane Volume	*
					Critical Volume	0	OK
						V/C	0.00

Maryland State Highway Administration
Turning Movement Summary and
Level of Service

Count Date:
Conditions: Future
Design Year: 2042

Location: MD 355 @ Main Street/Market Street
Computed By: BJM
Date: 4/4/14

Montgomery County Method

Morning Peak Hour 7:15-8:15 am

Lane Configuration

Evening Peak Hour 5:00-6:00 pm

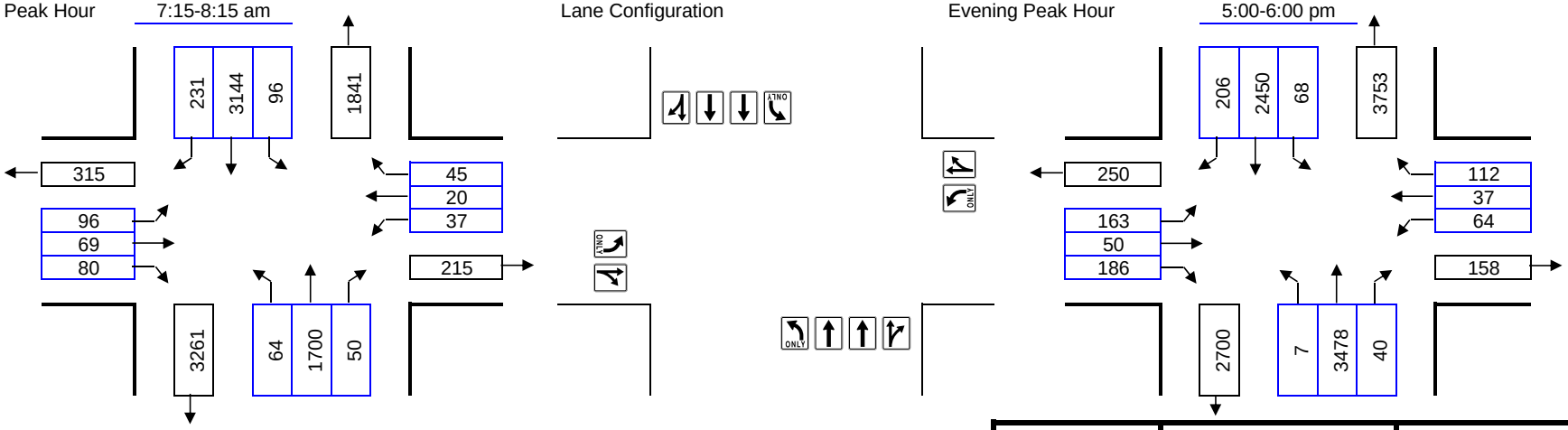

Right Turns Subtracted for Exclusive Right Turn Overlap Phasing or Right Turn on Red:

	AM	PM
NB Approach:	NB	NB
SB Approach:	SB	SB
EB Approach:	EB	EB
WB Approach:	WB	WB

Number of Lanes	Lane Use Factor		Opposing Volume (vph)		PCE
1 =	1.00	Congestion Standard	≤	199	1.1
2 =	0.53	= 1800	≤	599	2.0
3 =	0.37	for	≤	799	3.0
4 =	0.30	White Flint	≤	999	4.0
Dbl-left	0.60	Policy	≥	1000	5.0
		Area			

Movement	Volume	PCE	Lane Use Factor	Lane Volume	Opposing Lefts	Critical Lane Volume	*
NBTR + SBL	1750	1.00	0.37	648	96	744	
SBTR + NBL	3375	1.00	0.37	1249	64	1313	*
EBTR + WBL	149	1.00	1.00	149	37	186	*
WBTR + EBL	65	1.00	1.00	65	96	161	
					Critical Volume	1499	OK
					V/C	0.83	

Movement	Volume	PCE	Lane Use Factor	Lane Volume	Opposing Lefts	Critical Lane Volume	*
NBTR + SBL	3518	1.00	0.37	1302	68	1370	*
SBTR + NBL	2656	1.00	0.37	983	7	990	
EBTR + WBL	236	1.00	1.00	236	64	300	
WBTR + EBL	149	1.00	1.00	149	163	312	*
					Critical Volume	1682	OK
					V/C	0.93	

Maryland State Highway Administration
Turning Movement Summary and
Level of Service

Count Date:
Conditions: Future Saturday
Design Year: 2042

Location: MD 355 @ Main Street/Market Street
Computed By: LL
Date: 3/28/14

Montgomery County Method

Saturday 7:00-8:00 am

Lane Configuration

Evening Peak Hour 5:00-6:00 pm

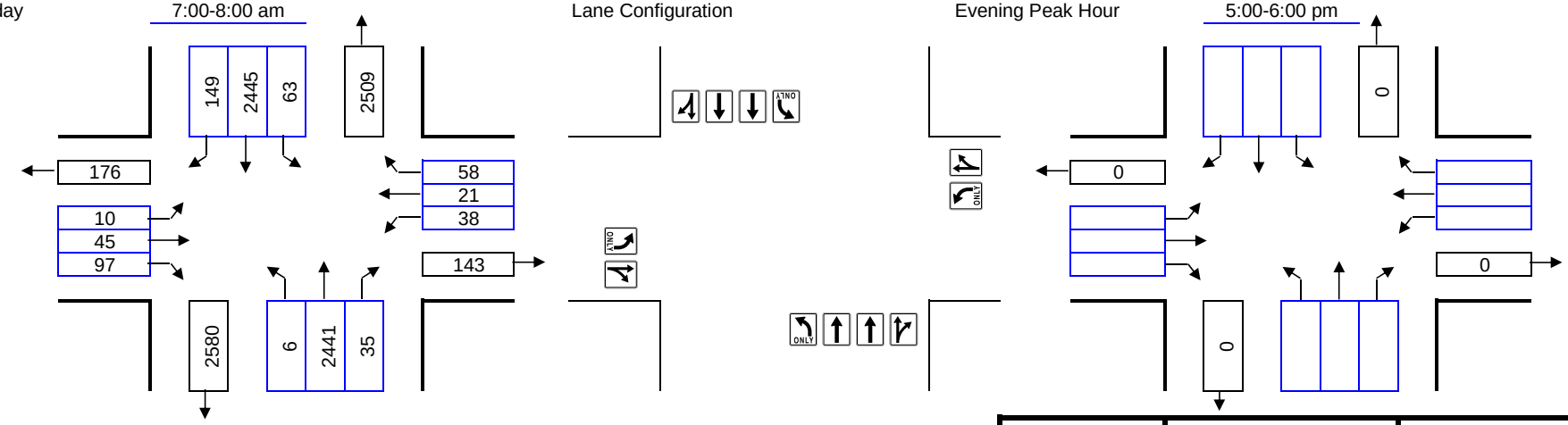

Right Turns Subtracted for Exclusive Right Turn Overlap Phasing or Right Turn on Red:

	AM	PM
NB Approach:	NB	NB
SB Approach:	SB	SB
EB Approach:	EB	EB
WB Approach:	WB	WB

Number of Lanes	Lane Use Factor		Opposing Volume (vph)		PCE
1 =	1.00	Congestion Standard	≤	199	1.1
2 =	0.53	= 1800	≤	599	2.0
3 =	0.37	for	≤	799	3.0
4 =	0.30	White Flint	≤	999	4.0
Dbl-left	0.60	Policy	≥	1000	5.0
		Area			

Movement	Volume	PCE	Lane Use Factor	Lane Volume	Opposing Lefts	Critical Lane Volume	*
NBTR + SBL	2476	1.00	0.37	916	63	979	*
SBTR + NBL	2594	1.00	0.37	960	6	966	
EBTR + WBL	142	1.00	1.00	142	38	180	*
WBTR + EBL	79	1.00	1.00	79	10	89	
					Critical Volume	1159	OK
					V/C	0.64	

Movement	Volume	PCE	Lane Use Factor	Lane Volume	Opposing Lefts	Critical Lane Volume	*
					Critical Volume	0	OK
					V/C	0.00	

Maryland State Highway Administration
Turning Movement Summary and
Level of Service

Count Date:
Conditions: Future.
Design Year: 2042

Location: Marinelli @ Citadel
Computed By: BJM
Date: 3/28/14

Montgomery County Method

Morning Peak Hour 7:15-8:15 am

Lane Configuration

Evening Peak Hour 5:00-6:00 pm

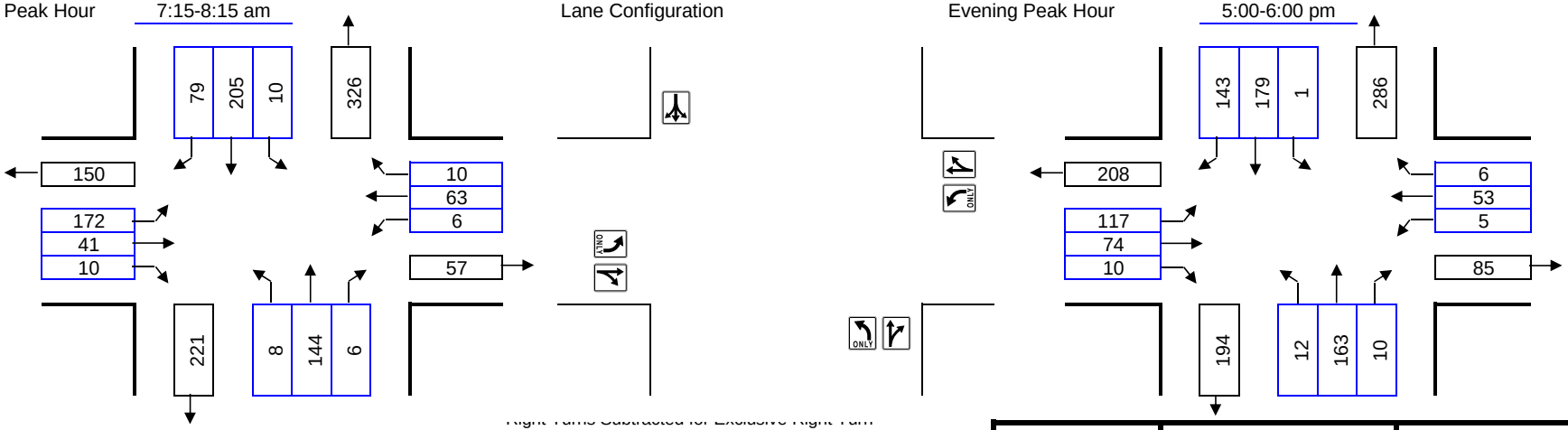

Right Turns Subtracted for Exclusive Right Turn Overlap Phasing or Right Turn on Red and Free Rights:

NB Approach:
SB Approach:
EB Approach:
WB Approach:

AM NB
SB
EB
WB

PM NB
SB
EB
WB

Number of Lanes	Lane Use Factor		Opposing Volume (vph)		PCE
1 =	1.00	Congestion Standard	≤	199	1.1
2 =	0.53	= 1800	≤	599	2.0
3 =	0.37	for	≤	799	3.0
4 =	0.30	White Flint	≤	999	4.0
Dbl-left	0.60	Policy Area	≥	1000	5.0

Movement	Volume	PCE	Lane Use Factor	Lane Volume	Opposing Lefts	Critical Lane Volume	*
NBTR + SBL	150	1.00	1.00	150	10	160	
SBLTR + NBL	294	1.00	1.00	294	8	302	*
EBTR + WBL	51	1.00	1.00	51	6	57	
WBTR + EBL	73	1.00	1.00	73	172	245	*
					Critical Volume	547	OK
					V/C	0.30	

Movement	Volume	PCE	Lane Use Factor	Lane Volume	Opposing Lefts	Critical Lane Volume	*
NBTR + SBL	173	1.00	1.00	173	1	174	
SBLTR + NBL	323	1.00	1.00	323	12	335	*
EBTR + WBL	84	1.00	1.00	84	5	89	
WBTR + EBL	59	1.00	1.00	59	117	176	*
					Critical Volume	511	OK
					V/C	0.28	

Maryland State Highway Administration
Turning Movement Summary and
Level of Service

Count Date:
Conditions: Future SATURDAY
Design Year: 2042

Location: Marinelli @ Citadel
Computed By: LL
Date: 3/28/14

Montgomery County Method

Morning Peak Hour 7:15-8:15 am

Lane Configuration

Evening Peak Hour 5:00-6:00 pm

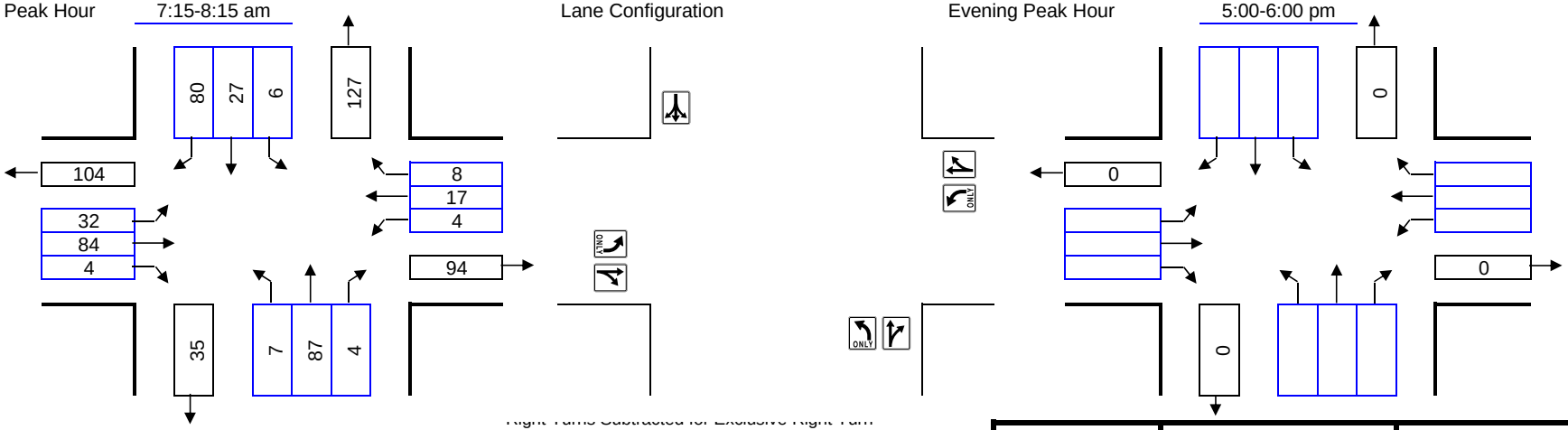

Right Turns Subtracted for Exclusive Right Turn Overlap Phasing or Right Turn on Red and Free Rights:

	AM	PM
NB Approach:	NB	NB
SB Approach:	SB	SB
EB Approach:	EB	EB
WB Approach:	WB	WB

Number of Lanes	Lane Use Factor		Opposing Volume (vph)		PCE
1 =	1.00	Congestion Standard	≤	199	1.1
2 =	0.53	= 1800	≤	599	2.0
3 =	0.37	for	≤	799	3.0
4 =	0.30	White Flint	≤	999	4.0
Dbl-left	0.60	Policy	≥	1000	5.0
		Area			

Movement	Volume	PCE	Lane Use Factor	Lane Volume	Opposing Lefts	Critical Lane Volume	*
NBTR + SBL	91	1.00	1.00	91	6	97	
SBLTR + NBL	113	1.00	1.00	113	7	120	*
EBTR + WBL	88	1.00	1.00	88	4	92	*
WBTR + EBL	25	1.00	1.00	25	32	57	
					Critical Volume	212	OK
					V/C	0.12	

Movement	Volume	PCE	Lane Use Factor	Lane Volume	Opposing Lefts	Critical Lane Volume	*
					Critical Volume	0	OK
					V/C	0.00	

Maryland State Highway Administration
Turning Movement Summary and
Level of Service

Count Date:
Conditions: Future.
Design Year: 2042

Location: Nicholson @ Citadel
Computed By: BJM
Date: 3/28/14

Montgomery County Method

Morning Peak Hour 7:15-8:15 am

Lane Configuration

Evening Peak Hour 5:00-6:00 pm

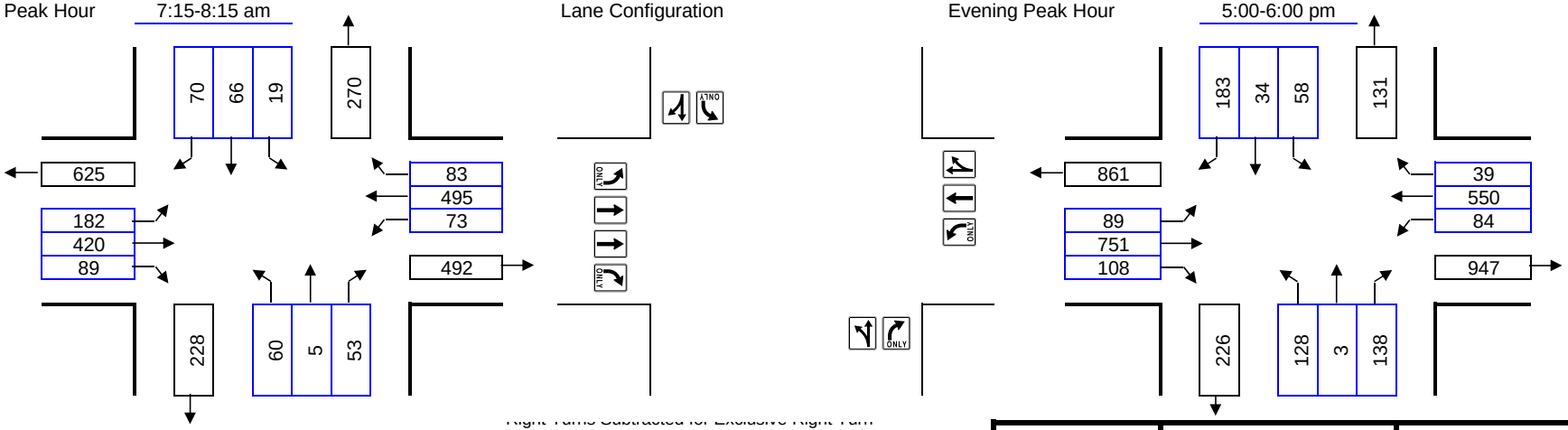

Right Turns Subtracted for Exclusive Right Turn Overlap Phasing or Right Turn on Red and Free Rights:

	AM	PM
NB Approach:	NB	NB
SB Approach:	SB	SB
EB Approach:	EB	EB
WB Approach:	WB	WB

Number of Lanes	Lane Use Factor		Opposing Volume (vph)		PCE
1 =	1.00	Congestion Standard	≤	199	1.1
2 =	0.53	= 1800	≤	599	2.0
3 =	0.37	for	≤	799	3.0
4 =	0.30	White Flint	≤	999	4.0
Dbl-left	0.60	Policy Area	≥	1000	5.0

Movement	Volume	PCE	Lane Use Factor	Lane Volume	Opposing Lefts	Critical Lane Volume	*
NBLT + SBL	65	1.00	1.00	65	19	84	
SBTR + NBL	136	1.00	1.00	136	60	196	*
EBT + WBL	420	1.00	0.53	223	73	296	
WBTR + EBL	578	1.00	0.53	306	182	488	*
					Critical Volume	684	OK
					V/C	0.38	

Movement	Volume	PCE	Lane Use Factor	Lane Volume	Opposing Lefts	Critical Lane Volume	*
NBR + SBL	138	1.00	1.00	138	58	196	
SBTR + NBL	217	1.00	1.00	217	128	345	*
EBT + WBL	751	1.00	0.53	398	84	482	*
WBTR + EBL	589	1.00	0.53	312	89	401	
					Critical Volume	827	OK
					V/C	0.46	

Maryland State Highway Administration
Turning Movement Summary and
Level of Service

Count Date:
Conditions: Future SATURDAY
Design Year: 2042

Location: Nicholson @ Citadel
Computed By: LL
Date: 3/28/14

Montgomery County Method

Morning Peak Hour 7:15-8:15 am

Lane Configuration

Evening Peak Hour 5:00-6:00 pm

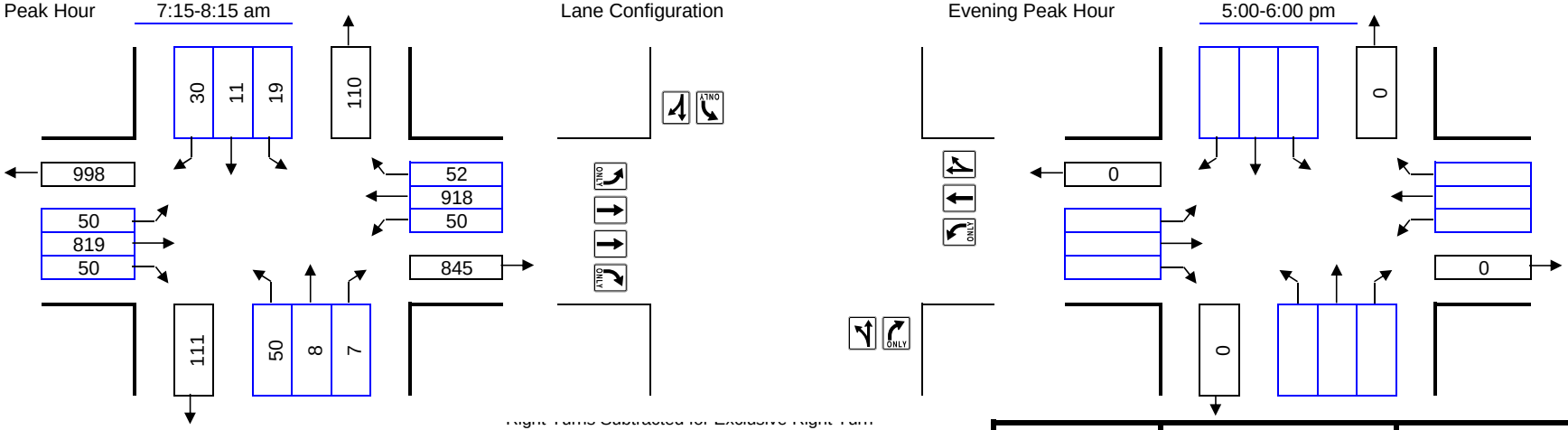

Right Turns Subtracted for Exclusive Right Turn Overlap Phasing or Right Turn on Red and Free Rights:

	AM	PM
NB Approach:	NB	NB
SB Approach:	SB	SB
EB Approach:	EB	EB
WB Approach:	WB	WB

Number of Lanes	Lane Use Factor		Opposing Volume (vph)		PCE
1 =	1.00	Congestion Standard	≤	199	1.1
2 =	0.53	= 1800	≤	599	2.0
3 =	0.37	for	≤	799	3.0
4 =	0.30	White Flint	≤	999	4.0
Dbl-left	0.60	Policy Area	≥	1000	5.0

Movement	Volume	PCE	Lane Use Factor	Lane Volume	Opposing Lefts	Critical Lane Volume	*
NBLT + SBL	58	1.00	1.00	58	19	77	
SBTR + NBL	41	1.00	1.00	41	50	91	*
EBT + WBL	819	1.00	0.53	434	50	484	
WBTR + EBL	970	1.00	0.53	514	50	564	*
					Critical Volume	655	OK
					V/C	0.36	

Movement	Volume	PCE	Lane Use Factor	Lane Volume	Opposing Lefts	Critical Lane Volume	*
					Critical Volume	0	OK
					V/C	0.00	

Maryland State Highway Administration
Turning Movement Summary and
Level of Service

Count Date:
Conditions: Future
Design Year: 2042

Location: MD 355 @ Executive
Computed By: BJM
Date: 3/28/14

Montgomery County Method

Morning Peak Hour 7:15-8:15 am

Lane Configuration

Evening Peak Hour 5:00-6:00 pm

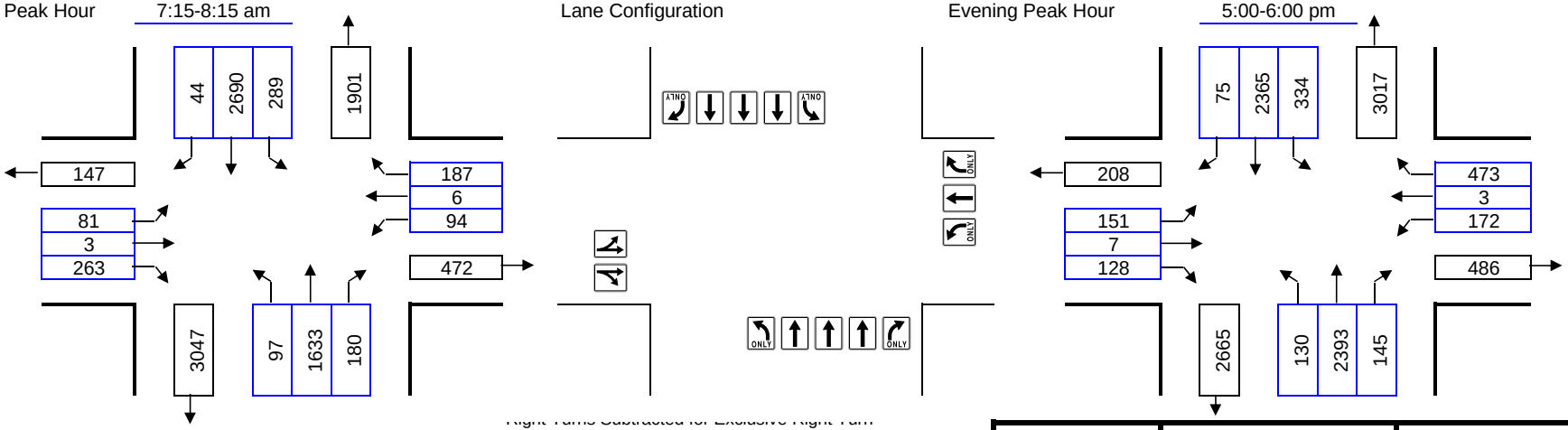

Right Turns Subtracted for Exclusive Right Turn Overlap Phasing or Right Turn on Red and Free Rights:

	AM	PM
NB Approach:	NB	NB
SB Approach:	SB	SB
EB Approach:	EB	EB
WB Approach:	WB	WB

Number of Lanes	Lane Use Factor		Opposing Volume (vph)		PCE
1 =	1.00	Congestion Standard	≤	199	1.1
2 =	0.53	= 1800	≤	599	2.0
3 =	0.37	for	≤	799	3.0
4 =	0.30	White Flint	≤	999	4.0
Dbl-left	0.60	Policy Area	≥	1000	5.0

Movement	Volume	PCE	Lane Use Factor	Lane Volume	Opposing Lefts	Critical Lane Volume	*
NBT + SBL	1633	1.00	0.37	604	289	893	
SBT + NBL	2690	1.00	0.37	995	97	1092	*
EBR + WBL	263	1.00	1.00	263	94	357	*
WBR + EBL	187	1.00	1.00	187	81	268	
					Critical Volume	1449	OK
					V/C	0.81	

De facto RT lane(s) assumed for EB approach.

Movement	Volume	PCE	Lane Use Factor	Lane Volume	Opposing Lefts	Critical Lane Volume	*
NBT + SBL	2393	1.00	0.37	885	334	1219	*
SBT + NBL	2365	1.00	0.37	875	130	1005	
EBTR + WBL	286	1.00	1.00	286	172	458	
WBR + EBL	473	1.00	1.00	473	151	624	*
					Critical Volume	1843	F
					V/C	1.02	

De facto LT lane(s) assumed for EB approach.

Maryland State Highway Administration
Turning Movement Summary and
Level of Service

Count Date:
Conditions: Future SATURDAY
Design Year: 2042

Location: MD 355 @ Executive
Computed By: LL
Date: 3/28/14

Montgomery County Method

Morning Peak Hour 7:15-8:15 am

Lane Configuration

Evening Peak Hour 5:00-6:00 pm

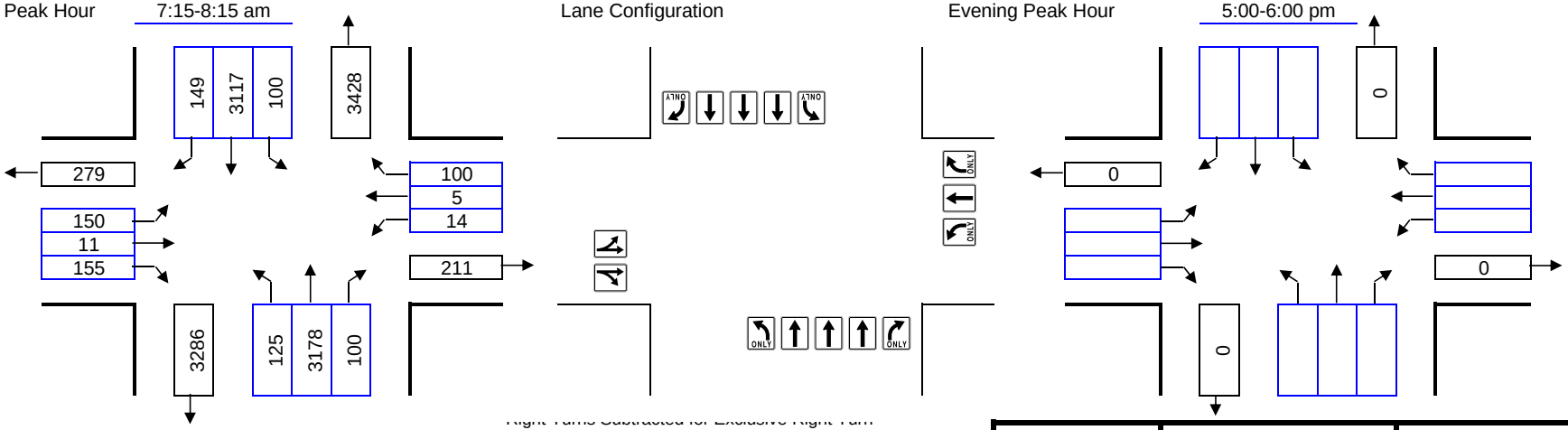

Right Turns Subtracted for Exclusive Right Turn Overlap Phasing or Right Turn on Red and Free Rights:

	AM	PM
NB Approach:	NB	NB
SB Approach:	SB	SB
EB Approach:	EB	EB
WB Approach:	WB 100	WB

Number of Lanes	Lane Use Factor		Opposing Volume (vph)		PCE
1 =	1.00	Congestion Standard	≤	199	1.1
2 =	0.53	= 1800	≤	599	2.0
3 =	0.37	for	≤	799	3.0
4 =	0.30	White Flint	≤	999	4.0
Dbl-left	0.60	Policy Area	≥	1000	5.0

Movement	Volume	PCE	Lane Use Factor	Lane Volume	Opposing Lefts	Critical Lane Volume	*
NBT + SBL	3178	1.00	0.37	1176	100	1276	
SBT + NBL	3117	1.00	0.37	1153	125	1278	*
EBLTR + WBL	316	1.00	0.53	167	14	181	*
WBT + EBL	5	1.00	1.00	5	150	155	
					Critical Volume	1459	OK
					V/C	0.81	

Movement	Volume	PCE	Lane Use Factor	Lane Volume	Opposing Lefts	Critical Lane Volume	*
					Critical Volume	0	OK
					V/C	0.00	

Maryland State Highway Administration
Turning Movement Summary and
Level of Service

Count Date:
Conditions: Future
Design Year: 2042

Location: Montrose Parkway @ Parklawn
Computed By: BJM
Date: 3/28/14

Montgomery County Method

Morning Peak Hour 7:15-8:15 am

Lane Configuration

Evening Peak Hour 5:00-6:00 pm

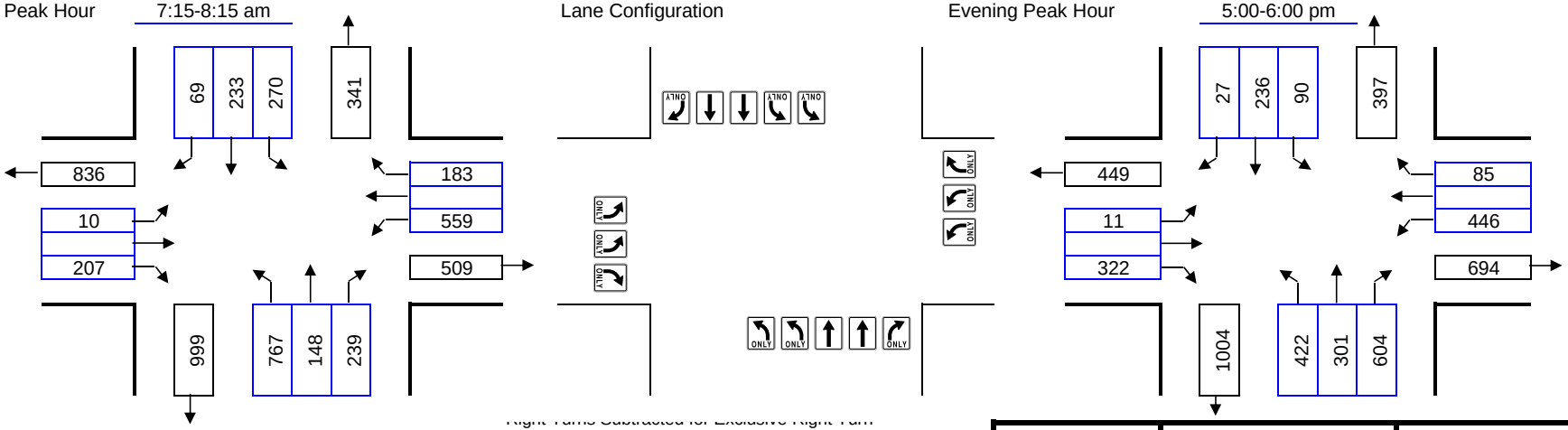

Right Turns Subtracted for Exclusive Right Turn Overlap Phasing or Right Turn on Red and Free Rights:

	AM		PM	
NB Approach:	NB		NB	268
SB Approach:	SB		SB	
EB Approach:	EB	207	EB	253
WB Approach:	WB		WB	

Number of Lanes	Lane Use Factor		Opposing Volume (vph)		PCE
1 =	1.00	Congestion Standard	≤	199	1.1
2 =	0.53	= 1550	≤	599	2.0
3 =	0.37	for	≤	799	3.0
4 =	0.30	North Bethesda	≤	999	4.0
Dbl-left	0.60	Policy	≥	1000	5.0
		Area			

Movement	Volume	PCE	Lane Use Factor	Lane Volume	Opposing Lefts	Critical Lane Volume	*
NBR + SBL	239	1.00	1.00	239	162	401	
SBT + NBL	233	1.00	0.53	123	460	583	*
EB + WBL	0	1.00	0.25	0	335	335	*
WBR + EBL	183	1.00	1.00	183	6	189	
					Critical Volume	918	OK
					V/C	0.59	

Movement	Volume	PCE	Lane Use Factor	Lane Volume	Opposing Lefts	Critical Lane Volume	*
NBR + SBL	336	1.00	1.00	336	54	390	*
SBT + NBL	236	1.00	0.53	125	253	378	
EBR + WBL	69	1.00	1.00	69	268	337	*
WBR + EBL	85	1.00	1.00	85	7	92	
					Critical Volume	727	OK
					V/C	0.47	

Maryland State Highway Administration
Turning Movement Summary and
Level of Service

Count Date:
Conditions: Future SATURDAY
Design Year: 2042

Location: Montrose Parkway @ Parklawn
Computed By: LL
Date: 3/28/14

Montgomery County Method

Morning Peak Hour 7:15-8:15 am

Lane Configuration

Evening Peak Hour 5:00-6:00 pm

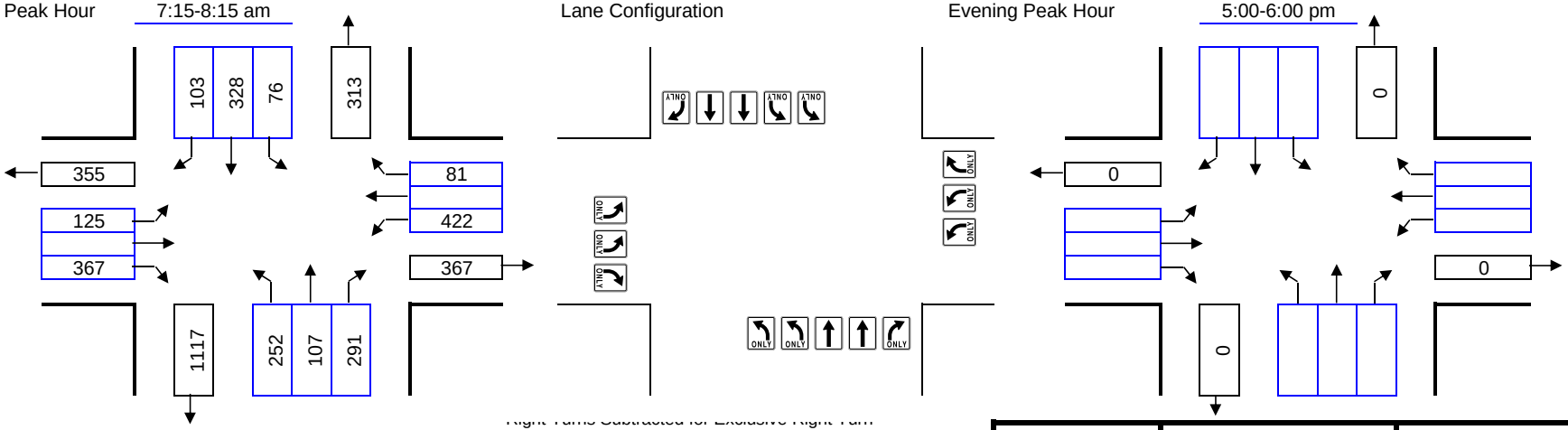

Right Turns Subtracted for Exclusive Right Turn Overlap Phasing or Right Turn on Red and Free Rights:

	AM		PM	
NB Approach:	NB	253	NB	
SB Approach:	SB		SB	
EB Approach:	EB	151	EB	
WB Approach:	WB		WB	

Number of Lanes	Lane Use Factor		Opposing Volume (vph)		PCE
1 =	1.00	Congestion Standard	≤	199	1.1
2 =	0.53	= 1550	≤	599	2.0
3 =	0.37	for	≤	799	3.0
4 =	0.30	North Bethesda	≤	999	4.0
Dbl-left	0.60	Policy	≥	1000	5.0
		Area			

Movement	Volume	PCE	Lane Use Factor	Lane Volume	Opposing Lefts	Critical Lane Volume	*
NBT + SBL	107	1.00	0.53	57	46	103	
SBT + NBL	328	1.00	0.53	174	151	325	*
EBR + WBL	216	1.00	1.00	216	253	469	*
WBR + EBL	81	1.00	1.00	81	75	156	
					Critical Volume	794	OK
					V/C	0.51	

Movement	Volume	PCE	Lane Use Factor	Lane Volume	Opposing Lefts	Critical Lane Volume	*
					Critical Volume	0	OK
					V/C	0.00	

HCM Signalized Intersection Capacity Analysis
1: Rollins Ave & MD 355

4/3/2014

Movement	EBL	EBT	EBR	WBL	WBT	WBR	NBL	NBT	NBR	SBL	SBT	SBR
Lane Configurations												
Volume (vph)	0	273	64	0	369	89	51	1876	368	169	3148	41
Ideal Flow (vphpl)	1900	1900	1900	1900	1900	1900	1900	1900	1900	1900	1900	1900
Total Lost time (s)		6.0			6.0		6.0	6.0	6.0	6.0	6.0	
Lane Util. Factor		0.95			0.95		1.00	0.91	1.00	1.00	0.91	
Frt		0.97			0.97		1.00	1.00	0.85	1.00	1.00	
Flt Protected		1.00			1.00		0.95	1.00	1.00	0.95	1.00	
Satd. Flow (prot)		3439			3436		1770	5085	1583	1770	5076	
Flt Permitted		1.00			1.00		0.04	1.00	1.00	0.06	1.00	
Satd. Flow (perm)		3439			3436		78	5085	1583	116	5076	
Peak-hour factor, PHF	0.95	0.95	0.95	0.95	0.95	0.95	0.95	0.95	0.95	0.95	0.95	0.95
Adj. Flow (vph)	0	287	67	0	388	94	54	1975	387	178	3314	43
RTOR Reduction (vph)	0	14	0	0	14	0	0	0	60	0	1	0
Lane Group Flow (vph)	0	340	0	0	468	0	54	1975	327	178	3356	0
Turn Type							pm+pt		Perm	pm+pt		
Protected Phases		4			8		5	2		1	6	
Permitted Phases							2		2	6		
Actuated Green, G (s)		22.5			22.5		98.9	95.7	95.7	115.5	106.3	
Effective Green, g (s)		22.5			22.5		98.9	95.7	95.7	115.5	106.3	
Actuated g/C Ratio		0.15			0.15		0.66	0.64	0.64	0.77	0.71	
Clearance Time (s)		6.0			6.0		6.0	6.0	6.0	6.0	6.0	
Vehicle Extension (s)		3.0			3.0		3.0	3.0	3.0	3.0	3.0	
Lane Grp Cap (vph)		516			515		88	3244	1010	241	3597	
v/s Ratio Prot		0.10			c0.14		0.01	0.39		c0.07	c0.66	
v/s Ratio Perm							0.39		0.21	0.50		
v/c Ratio		0.66			0.91		0.61	0.61	0.32	0.74	0.93	
Uniform Delay, d1		60.1			62.7		32.1	16.1	12.4	33.9	18.8	
Progression Factor		1.00			1.00		1.58	0.22	0.07	1.00	1.00	
Incremental Delay, d2		3.0			19.6		5.4	0.4	0.4	11.2	5.8	
Delay (s)		63.2			82.4		56.0	3.9	1.3	45.1	24.6	
Level of Service		E			F		E	A	A	D	C	
Approach Delay (s)		63.2			82.4			4.6			25.7	
Approach LOS		E			F			A			C	

Intersection Summary			
HCM Average Control Delay	24.2	HCM Level of Service	C
HCM Volume to Capacity ratio	0.94		
Actuated Cycle Length (s)	150.0	Sum of lost time (s)	18.0
Intersection Capacity Utilization	93.1%	ICU Level of Service	F
Analysis Period (min)	15		
c Critical Lane Group			

Movement	EBL	EBT	EBR	WBL	WBT	WBR	NBL	NBT	NBR	SBL	SBT	SBR
Lane Configurations												
Volume (vph)	5	15	40	1099	10	33	15	2126	230	66	3078	90
Ideal Flow (vphpl)	1900	1900	1900	1900	1900	1900	1900	1900	1900	1900	1900	1900
Total Lost time (s)		6.0	6.0	6.0	6.0		6.0	6.0	6.0	6.0	6.0	
Lane Util. Factor		1.00	1.00	0.97	1.00		1.00	0.91	1.00	1.00	0.91	
Frt		1.00	0.85	1.00	0.89		1.00	1.00	0.85	1.00	1.00	
Flt Protected		0.99	1.00	0.95	1.00		0.95	1.00	1.00	0.95	1.00	
Satd. Flow (prot)		1841	1583	3433	1650		1770	5085	1583	1770	5064	
Flt Permitted		0.99	1.00	0.95	1.00		0.95	1.00	1.00	0.06	1.00	
Satd. Flow (perm)		1841	1583	3433	1650		1770	5085	1583	106	5064	
Peak-hour factor, PHF	0.95	0.95	0.95	0.95	0.95	0.95	0.95	0.95	0.95	0.95	0.95	0.95
Adj. Flow (vph)	5	16	42	1157	11	35	16	2238	242	69	3240	95
RTOR Reduction (vph)	0	0	38	0	24	0	0	0	79	0	2	0
Lane Group Flow (vph)	0	21	4	1157	22	0	16	2238	163	69	3333	0
Turn Type	Split		Perm	Split			Prot		Perm	pm+pt		
Protected Phases	4	4		8	8		5	2		1	6	
Permitted Phases			4						2	6		
Actuated Green, G (s)		9.1	9.1	45.1	45.1		1.6	67.8	67.8	74.2	70.2	
Effective Green, g (s)		9.1	9.1	45.1	45.1		1.6	67.8	67.8	74.2	70.2	
Actuated g/C Ratio		0.06	0.06	0.30	0.30		0.01	0.45	0.45	0.49	0.47	
Clearance Time (s)		6.0	6.0	6.0	6.0		6.0	6.0	6.0	6.0	6.0	
Vehicle Extension (s)		3.0	3.0	3.0	3.0		3.0	3.0	3.0	3.0	3.0	
Lane Grp Cap (vph)		112	96	1032	496		19	2298	716	97	2370	
v/s Ratio Prot		c0.01		c0.34	0.01		0.01	0.44		c0.02	c0.66	
v/s Ratio Perm			0.00						0.10	0.33		
v/c Ratio		0.19	0.05	1.12	0.04		0.84	0.97	0.23	0.71	1.41	
Uniform Delay, d1		66.9	66.4	52.5	37.2		74.1	40.2	25.1	34.8	39.9	
Progression Factor		1.00	1.00	1.00	1.00		1.12	0.50	0.30	1.48	0.69	
Incremental Delay, d2		0.8	0.2	67.5	0.0		125.7	12.9	0.7	9.3	183.9	
Delay (s)		67.8	66.6	120.0	37.2		208.4	33.2	8.3	60.7	211.5	
Level of Service		E	E	F	D		F	C	A	E	F	
Approach Delay (s)		67.0			116.8			31.9			208.4	
Approach LOS		E			F			C			F	

Intersection Summary			
HCM Average Control Delay	130.3	HCM Level of Service	F
HCM Volume to Capacity ratio	1.17		
Actuated Cycle Length (s)	150.0	Sum of lost time (s)	18.0
Intersection Capacity Utilization	111.2%	ICU Level of Service	H
Analysis Period (min)	15		
c Critical Lane Group			

Movement	EBL	EBT	EBR	WBL	WBT	WBR	NBL	NBT	NBR	SBL	SBT	SBR
Lane Configurations												
Volume (vph)	20	0	25	55	20	35	30	2126	75	20	4181	50
Ideal Flow (vphpl)	1900	1900	1900	1900	1900	1900	1900	1900	1900	1900	1900	1900
Total Lost time (s)	6.0	6.0		6.0	6.0		6.0	6.0		6.0	6.0	
Lane Util. Factor	1.00	1.00		1.00	1.00		1.00	0.86		1.00	0.91	
Frt	1.00	0.85		1.00	0.90		1.00	0.99		1.00	1.00	
Flt Protected	0.95	1.00		0.95	1.00		0.95	1.00		0.95	1.00	
Satd. Flow (prot)	1770	1583		1770	1684		1770	6375		1770	5076	
Flt Permitted	0.72	1.00		0.74	1.00		0.95	1.00		0.95	1.00	
Satd. Flow (perm)	1340	1583		1379	1684		1770	6375		1770	5076	
Peak-hour factor, PHF	0.95	0.95	0.95	0.95	0.95	0.95	0.95	0.95	0.95	0.95	0.95	0.95
Adj. Flow (vph)	21	0	26	58	21	37	32	2238	79	21	4401	53
RTOR Reduction (vph)	0	24	0	0	34	0	0	3	0	0	1	0
Lane Group Flow (vph)	21	2	0	58	24	0	32	2314	0	21	4453	0
Turn Type	Perm			Perm			Prot			Prot		
Protected Phases		4			8		5	2		1	6	
Permitted Phases	4			8								
Actuated Green, G (s)	11.9	11.9		11.9	11.9		4.8	116.3		3.8	115.3	
Effective Green, g (s)	11.9	11.9		11.9	11.9		4.8	116.3		3.8	115.3	
Actuated g/C Ratio	0.08	0.08		0.08	0.08		0.03	0.78		0.03	0.77	
Clearance Time (s)	6.0	6.0		6.0	6.0		6.0	6.0		6.0	6.0	
Vehicle Extension (s)	3.0	3.0		3.0	3.0		3.0	3.0		3.0	3.0	
Lane Grp Cap (vph)	106	126		109	134		57	4943		45	3902	
v/s Ratio Prot		0.00			0.01		c0.02	0.36		0.01	c0.88	
v/s Ratio Perm	0.02			c0.04								
v/c Ratio	0.20	0.02		0.53	0.18		0.56	0.47		0.47	1.14	
Uniform Delay, d1	64.6	63.7		66.4	64.5		71.6	5.9		72.1	17.4	
Progression Factor	1.00	1.00		1.00	1.00		1.01	0.39		1.05	0.60	
Incremental Delay, d2	0.9	0.1		4.9	0.6		10.7	0.3		0.7	63.9	
Delay (s)	65.5	63.7		71.3	65.1		82.9	2.6		76.7	74.3	
Level of Service	E	E		E	E		F	A		E	E	
Approach Delay (s)		64.5			68.2			3.7			74.3	
Approach LOS		E			E			A			E	

Intersection Summary			
HCM Average Control Delay	50.4	HCM Level of Service	D
HCM Volume to Capacity ratio	1.07		
Actuated Cycle Length (s)	150.0	Sum of lost time (s)	18.0
Intersection Capacity Utilization	101.6%	ICU Level of Service	G
Analysis Period (min)	15		
c Critical Lane Group			

Intersection Sign configuration not allowed in HCM analysis.

Movement	EBL	EBT	EBR	WBL	WBT	WBR	NBL	NBT	NBR	SBL	SBT	SBR
Lane Configurations												
Volume (vph)	252	977	0	0	2075	231	257	0	146	0	0	0
Ideal Flow (vphpl)	1900	1900	1900	1900	1900	1900	1900	1900	1900	1900	1900	1900
Lane Width	11	11	11	11	11	11	11	11	11	11	11	11
Total Lost time (s)	6.0	6.0			6.0	6.0		6.0	6.0			
Lane Util. Factor	0.97	0.95			0.95	1.00		1.00	0.88			
Frt	1.00	1.00			1.00	0.85		1.00	0.85			
Flt Protected	0.95	1.00			1.00	1.00		0.95	1.00			
Satd. Flow (prot)	3319	3421			3421	1531		1711	2694			
Flt Permitted	0.95	1.00			1.00	1.00		0.95	1.00			
Satd. Flow (perm)	3319	3421			3421	1531		1711	2694			
Peak-hour factor, PHF	0.95	0.95	0.95	0.95	0.95	0.95	0.95	0.95	0.95	0.95	0.95	0.95
Adj. Flow (vph)	265	1028	0	0	2184	243	271	0	154	0	0	0
RTOR Reduction (vph)	0	0	0	0	0	56	0	0	130	0	0	0
Lane Group Flow (vph)	265	1028	0	0	2184	187	0	271	24	0	0	0
Turn Type	Prot					Perm	Perm		Perm			
Protected Phases	1	6			2			4				
Permitted Phases						2	4		4			
Actuated Green, G (s)	12.0	115.0			97.0	97.0		23.0	23.0			
Effective Green, g (s)	12.0	115.0			97.0	97.0		23.0	23.0			
Actuated g/C Ratio	0.08	0.77			0.65	0.65		0.15	0.15			
Clearance Time (s)	6.0	6.0			6.0	6.0		6.0	6.0			
Vehicle Extension (s)	3.0	3.0			3.0	3.0		3.0	3.0			
Lane Grp Cap (vph)	266	2623			2212	990		262	413			
v/s Ratio Prot	c0.08	0.30			c0.64							
v/s Ratio Perm						0.12		0.16	0.01			
v/c Ratio	1.00	0.39			0.99	0.19		1.03	0.06			
Uniform Delay, d1	69.0	5.8			25.9	10.7		63.5	54.2			
Progression Factor	1.09	0.22			0.15	0.00		0.79	0.76			
Incremental Delay, d2	36.2	0.2			3.5	0.0		61.5	0.1			
Delay (s)	111.6	1.5			7.4	0.1		111.5	41.1			
Level of Service	F	A			A	A		F	D			
Approach Delay (s)		24.1			6.6			86.0			0.0	
Approach LOS		C			A			F			A	

Intersection Summary			
HCM Average Control Delay	20.2	HCM Level of Service	C
HCM Volume to Capacity ratio	1.00		
Actuated Cycle Length (s)	150.0	Sum of lost time (s)	18.0
Intersection Capacity Utilization	93.8%	ICU Level of Service	F
Analysis Period (min)	15		

c Critical Lane Group

Movement	EBL	EBT	EBR	WBL	WBT	WBR	NBL	NBT	NBR	SBL	SBT	SBR
Lane Configurations												
Volume (vph)	95	420	214	65	331	232	81	1984	14	242	3200	33
Ideal Flow (vphpl)	1900	1900	1900	1900	1900	1900	1900	1900	1900	1900	1900	1900
Total Lost time (s)	6.0	6.0	6.0	6.0	6.0	6.0	6.0	6.0		6.0	6.0	6.0
Lane Util. Factor	*1.00	*1.00	1.00	1.00	1.00	1.00	1.00	0.91		1.00	0.91	1.00
Frt	1.00	1.00	0.85	1.00	1.00	0.85	1.00	1.00		1.00	1.00	0.85
Flt Protected	0.95	1.00	1.00	0.95	1.00	1.00	0.95	1.00		0.95	1.00	1.00
Satd. Flow (prot)	3539	1861	1583	1770	1863	1583	1770	5080		1770	5085	1583
Flt Permitted	0.95	1.00	1.00	0.95	1.00	1.00	0.06	1.00		0.06	1.00	1.00
Satd. Flow (perm)	3539	1861	1583	1770	1863	1583	120	5080		110	5085	1583
Peak-hour factor, PHF	0.95	0.95	0.95	0.95	0.95	0.95	0.95	0.95	0.95	0.95	0.95	0.95
Adj. Flow (vph)	100	442	225	68	348	244	85	2088	15	255	3368	35
RTOR Reduction (vph)	0	0	131	0	0	185	0	1	0	0	0	8
Lane Group Flow (vph)	90	452	94	68	348	59	85	2102	0	255	3368	27
Turn Type	Split		Perm	Split		Perm	pm+pt			pm+pt		Perm
Protected Phases	4	4		8	8		5	2		1	6	
Permitted Phases			4			8	2			6		6
Actuated Green, G (s)	29.0	29.0	29.0	24.0	24.0	24.0	66.0	62.0		79.0	69.0	69.0
Effective Green, g (s)	29.0	29.0	29.0	24.0	24.0	24.0	66.0	62.0		79.0	69.0	69.0
Actuated g/C Ratio	0.19	0.19	0.19	0.16	0.16	0.16	0.44	0.41		0.53	0.46	0.46
Clearance Time (s)	6.0	6.0	6.0	6.0	6.0	6.0	6.0	6.0		6.0	6.0	6.0
Vehicle Extension (s)	3.0	3.0	3.0	3.0	3.0	3.0	3.0	3.0		3.0	3.0	3.0
Lane Grp Cap (vph)	684	360	306	283	298	253	97	2100		180	2339	728
v/s Ratio Prot	0.03	c0.24		0.04	c0.19		0.02	0.41		c0.10	c0.66	
v/s Ratio Perm			0.06			0.04	0.36			0.65		0.02
v/c Ratio	0.13	1.26	0.31	0.24	1.17	0.23	0.88	1.00		1.42	1.44	0.04
Uniform Delay, d1	50.1	60.5	51.9	55.0	63.0	55.0	74.6	44.0		48.1	40.5	22.3
Progression Factor	0.78	0.87	1.23	0.96	0.97	1.15	1.69	0.90		1.72	0.74	1.05
Incremental Delay, d2	0.1	130.9	0.4	0.4	105.2	0.5	43.4	17.2		198.0	198.8	0.0
Delay (s)	39.2	183.4	64.2	53.2	166.2	63.9	169.8	56.9		280.6	228.7	23.5
Level of Service	D	F	E	D	F	E	F	E		F	F	C
Approach Delay (s)		131.6			116.7			61.3			230.3	
Approach LOS		F			F			E			F	

Intersection Summary			
HCM Average Control Delay	158.7	HCM Level of Service	F
HCM Volume to Capacity ratio	1.38		
Actuated Cycle Length (s)	150.0	Sum of lost time (s)	24.0
Intersection Capacity Utilization	125.8%	ICU Level of Service	H
Analysis Period (min)	15		
c Critical Lane Group			

Movement	EBL	EBT	EBR	WBL	WBT	WBR	NBL	NBT	NBR	SBL	SBT	SBR
Lane Configurations												
Volume (vph)	60	220	65	47	6	40	107	1898	105	140	3082	31
Ideal Flow (vphpl)	1900	1900	1900	1900	1900	1900	1900	1900	1900	1900	1900	1900
Total Lost time (s)	6.0	6.0		6.0	6.0	6.0	6.0	6.0	6.0	6.0	6.0	6.0
Lane Util. Factor	1.00	0.95		1.00	0.95	1.00	1.00	0.91	1.00	1.00	0.91	1.00
Frt	1.00	0.97		1.00	1.00	0.85	1.00	1.00	0.85	1.00	1.00	0.85
Flt Protected	0.95	1.00		0.95	1.00	1.00	0.95	1.00	1.00	0.95	1.00	1.00
Satd. Flow (prot)	1770	3419		1770	3539	1583	1770	5085	1583	1770	5085	1583
Flt Permitted	0.75	1.00		0.35	1.00	1.00	0.04	1.00	1.00	0.06	1.00	1.00
Satd. Flow (perm)	1404	3419		654	3539	1583	84	5085	1583	104	5085	1583
Peak-hour factor, PHF	0.95	0.95	0.95	0.95	0.95	0.95	0.95	0.95	0.95	0.95	0.95	0.95
Adj. Flow (vph)	63	232	68	49	6	42	113	1998	111	147	3244	33
RTOR Reduction (vph)	0	20	0	0	0	37	0	0	45	0	0	9
Lane Group Flow (vph)	63	280	0	49	6	5	113	1998	66	147	3244	24
Turn Type	pm+pt			pm+pt		Perm	pm+pt		Perm	pm+pt		Perm
Protected Phases	7	4		3	8		5	2		1	6	
Permitted Phases	4			8		8	2		2	6		6
Actuated Green, G (s)	23.2	17.6		23.2	17.6	17.6	100.9	89.1	89.1	104.7	91.0	91.0
Effective Green, g (s)	23.2	17.6		23.2	17.6	17.6	100.9	89.1	89.1	104.7	91.0	91.0
Actuated g/C Ratio	0.15	0.12		0.15	0.12	0.12	0.67	0.59	0.59	0.70	0.61	0.61
Clearance Time (s)	6.0	6.0		6.0	6.0	6.0	6.0	6.0	6.0	6.0	6.0	6.0
Vehicle Extension (s)	3.0	3.0		3.0	3.0	3.0	3.0	3.0	3.0	3.0	3.0	3.0
Lane Grp Cap (vph)	231	401		143	415	186	189	3020	940	225	3085	960
v/s Ratio Prot	0.01	c0.08		c0.01	0.00		0.05	0.39		c0.06	c0.64	
v/s Ratio Perm	0.03			0.04		0.00	0.36		0.04	0.40		0.02
v/c Ratio	0.27	0.70		0.34	0.01	0.03	0.60	0.66	0.07	0.65	1.05	0.03
Uniform Delay, d1	55.6	63.6		55.3	58.5	58.6	43.3	20.4	12.9	32.7	29.5	11.8
Progression Factor	1.03	1.03		1.05	1.03	1.20	1.25	1.01	2.07	1.73	0.34	0.28
Incremental Delay, d2	0.6	5.2		1.4	0.0	0.1	0.5	0.1	0.0	0.6	24.2	0.0
Delay (s)	57.6	70.7		59.3	60.6	70.5	54.4	20.6	26.7	57.1	34.4	3.3
Level of Service	E	E		E	E	E	D	C	C	E	C	A
Approach Delay (s)		68.5			64.2			22.6			35.1	
Approach LOS		E			E			C			D	

Intersection Summary			
HCM Average Control Delay	33.0	HCM Level of Service	C
HCM Volume to Capacity ratio	0.90		
Actuated Cycle Length (s)	150.0	Sum of lost time (s)	18.0
Intersection Capacity Utilization	97.0%	ICU Level of Service	F
Analysis Period (min)	15		
c Critical Lane Group			

Movement	EBL	EBT	EBR	WBL	WBT	WBR	NBL	NBT	NBR	SBL	SBT	SBR
Lane Configurations												
Volume (vph)	219	730	11	125	457	89	53	1811	90	193	2886	66
Ideal Flow (vphpl)	1900	1900	1900	1900	1900	1900	1900	1900	1900	1900	1900	1900
Total Lost time (s)		6.0	6.0	6.0	6.0	6.0	6.0	6.0	6.0	6.0	6.0	6.0
Lane Util. Factor		0.95	1.00	0.97	0.95	1.00	1.00	0.91	1.00	1.00	0.91	1.00
Frt		1.00	0.85	1.00	1.00	0.85	1.00	1.00	0.85	1.00	1.00	0.85
Flt Protected		0.99	1.00	0.95	1.00	1.00	0.95	1.00	1.00	0.95	1.00	1.00
Satd. Flow (prot)		3499	1583	3433	3539	1583	1770	5085	1583	1770	5085	1583
Flt Permitted		0.72	1.00	0.10	1.00	1.00	0.95	1.00	1.00	0.07	1.00	1.00
Satd. Flow (perm)		2542	1583	358	3539	1583	1770	5085	1583	130	5085	1583
Peak-hour factor, PHF	0.95	0.95	0.95	0.95	0.95	0.95	0.95	0.95	0.95	0.95	0.95	0.95
Adj. Flow (vph)	231	768	12	132	481	94	56	1906	95	203	3038	69
RTOR Reduction (vph)	0	0	4	0	0	51	0	0	36	0	0	16
Lane Group Flow (vph)	0	999	8	132	481	43	56	1906	59	203	3038	53
Turn Type	Perm		Perm	pm+pt		Perm	Prot		Perm	pm+pt		Perm
Protected Phases		4		3	8		5	2		1	6	
Permitted Phases	4		4	8		8			2	6		6
Actuated Green, G (s)		54.3	54.3	69.0	69.0	69.0	5.6	54.0	54.0	66.4	57.4	57.4
Effective Green, g (s)		54.3	54.3	69.0	69.0	69.0	5.6	54.0	54.0	66.4	57.4	57.4
Actuated g/C Ratio		0.36	0.36	0.46	0.46	0.46	0.04	0.36	0.36	0.44	0.38	0.38
Clearance Time (s)		6.0	6.0	6.0	6.0	6.0	6.0	6.0	6.0	6.0	6.0	6.0
Vehicle Extension (s)		3.0	3.0	3.0	3.0	3.0	3.0	3.0	3.0	3.0	3.0	3.0
Lane Grp Cap (vph)		920	573	343	1628	728	66	1831	570	156	1946	606
v/s Ratio Prot				0.02	c0.14		0.03	0.37		c0.08	c0.60	
v/s Ratio Perm		c0.39	0.01	0.15		0.03			0.04	0.50		0.03
v/c Ratio		1.09	0.01	0.38	0.30	0.06	0.85	1.04	0.10	1.30	1.56	0.09
Uniform Delay, d1		47.9	30.7	28.7	25.3	22.5	71.8	48.0	31.9	42.5	46.3	29.6
Progression Factor		0.44	0.60	0.45	0.46	0.36	1.44	0.50	0.23	1.45	0.53	0.25
Incremental Delay, d2		51.9	0.0	0.7	0.1	0.0	48.3	29.7	0.3	139.9	252.7	0.0
Delay (s)		73.1	18.4	13.7	11.7	8.1	151.8	53.8	7.7	201.3	277.1	7.5
Level of Service		E	B	B	B	A	F	D	A	F	F	A
Approach Delay (s)		72.5			11.6			54.4			266.9	
Approach LOS		E			B			D			F	

Intersection Summary			
HCM Average Control Delay	152.0	HCM Level of Service	F
HCM Volume to Capacity ratio	1.30		
Actuated Cycle Length (s)	150.0	Sum of lost time (s)	24.0
Intersection Capacity Utilization	118.3%	ICU Level of Service	H
Analysis Period (min)	15		
c Critical Lane Group			

Movement	EBL	EBT	EBR	WBL	WBT	WBR	NBL	NBT	NBR	SBL	SBT	SBR
Lane Configurations												
Volume (vph)	38	0	187	123	0	82	104	1853	216	145	2595	157
Ideal Flow (vphpl)	1900	1900	1900	1900	1900	1900	1900	1900	1900	1900	1900	1900
Total Lost time (s)	6.0	6.0		6.0	6.0		6.0	6.0		6.0	6.0	6.0
Lane Util. Factor	1.00	1.00		1.00	1.00		1.00	0.86		1.00	0.91	1.00
Frt	1.00	0.85		1.00	0.85		1.00	0.98		1.00	1.00	0.85
Flt Protected	0.95	1.00		0.95	1.00		0.95	1.00		0.95	1.00	1.00
Satd. Flow (prot)	1770	1583		1770	1583		1770	6308		1770	5085	1583
Flt Permitted	0.70	1.00		0.22	1.00		0.05	1.00		0.95	1.00	1.00
Satd. Flow (perm)	1306	1583		409	1583		88	6308		1770	5085	1583
Peak-hour factor, PHF	0.95	0.95	0.95	0.95	0.95	0.95	0.95	0.95	0.95	0.95	0.95	0.95
Adj. Flow (vph)	40	0	197	129	0	86	109	1951	227	153	2732	165
RTOR Reduction (vph)	0	83	0	0	76	0	0	12	0	0	0	41
Lane Group Flow (vph)	40	114	0	129	10	0	109	2166	0	153	2732	124
Turn Type	pm+pt			pm+pt			pm+pt			Prot		Perm
Protected Phases	7	4		3	8		5	2		1	6	
Permitted Phases	4			8			2					6
Actuated Green, G (s)	20.9	15.3		26.7	18.2		94.2	84.8		17.4	92.8	92.8
Effective Green, g (s)	20.9	15.3		26.7	18.2		94.2	84.8		17.4	92.8	92.8
Actuated g/C Ratio	0.14	0.10		0.18	0.12		0.63	0.57		0.12	0.62	0.62
Clearance Time (s)	6.0	6.0		6.0	6.0		6.0	6.0		6.0	6.0	6.0
Vehicle Extension (s)	3.0	3.0		3.0	3.0		3.0	3.0		3.0	3.0	3.0
Lane Grp Cap (vph)	199	161		150	192		161	3566		205	3146	979
v/s Ratio Prot	0.01	0.07		c0.05	0.01		0.04	0.34		c0.09	c0.54	
v/s Ratio Perm	0.02			c0.10			0.38					0.08
v/c Ratio	0.20	0.71		0.86	0.05		0.68	0.61		0.75	0.87	0.13
Uniform Delay, d1	56.8	65.2		56.8	58.3		35.4	21.6		64.2	23.6	11.8
Progression Factor	1.00	1.00		1.00	1.00		1.37	0.39		1.25	0.33	0.03
Incremental Delay, d2	0.5	13.7		35.7	0.1		7.3	0.5		6.3	1.6	0.1
Delay (s)	57.3	79.0		92.6	58.4		55.9	8.9		86.4	9.3	0.5
Level of Service	E	E		F	E		E	A		F	A	A
Approach Delay (s)		75.3			78.9			11.2			12.7	
Approach LOS		E			E			B			B	

Intersection Summary			
HCM Average Control Delay	17.1	HCM Level of Service	B
HCM Volume to Capacity ratio	0.90		
Actuated Cycle Length (s)	150.0	Sum of lost time (s)	24.0
Intersection Capacity Utilization	94.3%	ICU Level of Service	F
Analysis Period (min)	15		
c Critical Lane Group			

Movement	EBL	EBT	EBR	WBL	WBT	WBR	NBL	NBT	NBR	SBL	SBT	SBR
Lane Configurations												
Volume (vph)	251	186	45	346	138	13	83	1909	152	28	2706	171
Ideal Flow (vphpl)	1900	1900	1900	1900	1900	1900	1900	1900	1900	1900	1900	1900
Total Lost time (s)		6.0	6.0	6.0	6.0	6.0	6.0	6.0	6.0	6.0	6.0	
Lane Util. Factor		0.95	1.00	0.95	0.95	1.00	1.00	0.91	1.00	1.00	0.91	
Frt		1.00	0.85	1.00	1.00	0.85	1.00	1.00	0.85	1.00	0.99	
Flt Protected		0.97	1.00	0.95	0.98	1.00	0.95	1.00	1.00	0.95	1.00	
Satd. Flow (prot)		3440	1583	1681	1732	1583	1770	5085	1583	1770	5040	
Flt Permitted		0.97	1.00	0.95	0.98	1.00	0.05	1.00	1.00	0.05	1.00	
Satd. Flow (perm)		3440	1583	1681	1732	1583	89	5085	1583	96	5040	
Peak-hour factor, PHF	0.95	0.95	0.95	0.95	0.95	0.95	0.95	0.95	0.95	0.95	0.95	0.95
Adj. Flow (vph)	264	196	47	364	145	14	87	2009	160	29	2848	180
RTOR Reduction (vph)	0	0	0	0	0	12	0	0	70	0	5	0
Lane Group Flow (vph)	0	460	47	251	258	2	87	2009	90	29	3023	0
Turn Type	Split		pm+ov	Split		Perm	pm+pt		Perm	pm+pt		
Protected Phases	4	4	5	8	8		5	2		1	6	
Permitted Phases			4			8	2		2	6		
Actuated Green, G (s)		18.0	24.9	20.0	20.0	20.0	90.9	84.0	84.0	85.1	81.1	
Effective Green, g (s)		18.0	24.9	20.0	20.0	20.0	90.9	84.0	84.0	85.1	81.1	
Actuated g/C Ratio		0.12	0.17	0.13	0.13	0.13	0.61	0.56	0.56	0.57	0.54	
Clearance Time (s)		6.0	6.0	6.0	6.0	6.0	6.0	6.0	6.0	6.0	6.0	
Vehicle Extension (s)		3.0	3.0	3.0	3.0	3.0	3.0	3.0	3.0	3.0	3.0	
Lane Grp Cap (vph)		413	263	224	231	211	131	2848	886	99	2725	
v/s Ratio Prot		c0.13	0.01	c0.15	0.15		c0.03	c0.40		0.01	c0.60	
v/s Ratio Perm			0.02			0.00	0.37		0.06	0.16		
v/c Ratio		1.25dl	0.18	1.12	1.12	0.01	0.66	0.71	0.10	0.29	1.11	
Uniform Delay, d1		66.0	53.8	65.0	65.0	56.4	35.8	24.0	15.4	19.7	34.5	
Progression Factor		1.27	1.04	1.00	1.00	1.00	1.85	0.14	0.01	0.93	0.62	
Incremental Delay, d2		69.7	0.2	96.3	94.2	0.0	8.3	1.0	0.2	0.8	52.5	
Delay (s)		153.3	56.1	161.3	159.2	56.4	74.3	4.3	0.3	19.2	73.8	
Level of Service		F	E	F	F	E	E	A	A	B	E	
Approach Delay (s)		144.2			157.5			6.7			73.2	
Approach LOS		F			F			A			E	

Intersection Summary			
HCM Average Control Delay	62.2	HCM Level of Service	E
HCM Volume to Capacity ratio	1.14		
Actuated Cycle Length (s)	150.0	Sum of lost time (s)	30.0
Intersection Capacity Utilization	107.8%	ICU Level of Service	G
Analysis Period (min)	15		

dl Defacto Left Lane. Recode with 1 though lane as a left lane.
c Critical Lane Group

Movement	EBL	EBT	EBR	WBL	WBT	WBR	NBL	NBT	NBR	SBL	SBT	SBR
Lane Configurations												
Volume (vph)	19	11	16	547	26	149	19	1997	307	59	3038	25
Ideal Flow (vphpl)	1900	1900	1900	1900	1900	1900	1900	1900	1900	1900	1900	1900
Total Lost time (s)		6.0	6.0	6.0	6.0	6.0	6.0	6.0	6.0	6.0	6.0	
Lane Util. Factor		1.00	1.00	0.95	0.95	1.00	1.00	0.91	1.00	1.00	0.91	
Frt		1.00	0.85	1.00	1.00	0.85	1.00	1.00	0.85	1.00	1.00	
Flt Protected		0.97	1.00	0.95	0.96	1.00	0.95	1.00	1.00	0.95	1.00	
Satd. Flow (prot)		1806	1583	1681	1693	1583	1770	5085	1583	1770	5079	
Flt Permitted		0.97	1.00	0.95	0.96	1.00	0.05	1.00	1.00	0.05	1.00	
Satd. Flow (perm)		1806	1583	1681	1693	1583	93	5085	1583	91	5079	
Peak-hour factor, PHF	0.95	0.95	0.95	0.95	0.95	0.95	0.95	0.95	0.95	0.95	0.95	0.95
Adj. Flow (vph)	20	12	17	576	27	157	20	2102	323	62	3198	26
RTOR Reduction (vph)	0	0	16	0	0	58	0	0	150	0	0	0
Lane Group Flow (vph)	0	32	1	300	303	99	20	2102	173	62	3224	0
Turn Type	Split		Perm	Split		Perm	pm+pt		Perm	pm+pt		
Protected Phases	4	4		8	8		5	2		1	6	
Permitted Phases			4			8	2		2	6		
Actuated Green, G (s)		9.4	9.4	30.8	30.8	30.8	84.1	80.2	80.2	87.5	81.9	
Effective Green, g (s)		9.4	9.4	30.8	30.8	30.8	84.1	80.2	80.2	87.5	81.9	
Actuated g/C Ratio		0.06	0.06	0.21	0.21	0.21	0.56	0.53	0.53	0.58	0.55	
Clearance Time (s)		6.0	6.0	6.0	6.0	6.0	6.0	6.0	6.0	6.0	6.0	
Vehicle Extension (s)		3.0	3.0	3.0	3.0	3.0	3.0	3.0	3.0	3.0	3.0	
Lane Grp Cap (vph)		113	99	345	348	325	96	2719	846	116	2773	
v/s Ratio Prot		c0.02		0.18	c0.18		0.01	0.41		c0.02	c0.63	
v/s Ratio Perm			0.00			0.06	0.11		0.11	0.29		
v/c Ratio		0.28	0.01	0.87	0.87	0.30	0.21	0.77	0.20	0.53	1.16	
Uniform Delay, d1		67.1	65.9	57.7	57.7	50.5	36.1	27.7	18.2	24.2	34.0	
Progression Factor		1.00	1.00	1.00	1.00	1.00	0.55	0.17	0.00	1.43	1.27	
Incremental Delay, d2		1.4	0.0	20.1	20.4	0.5	0.4	0.7	0.2	0.4	73.5	
Delay (s)		68.5	66.0	77.8	78.1	51.1	20.3	5.5	0.2	34.9	116.9	
Level of Service		E	E	E	E	D	C	A	A	C	F	
Approach Delay (s)		67.6			72.4			4.9			115.4	
Approach LOS		E			E			A			F	

Intersection Summary			
HCM Average Control Delay	68.7	HCM Level of Service	E
HCM Volume to Capacity ratio	0.97		
Actuated Cycle Length (s)	150.0	Sum of lost time (s)	18.0
Intersection Capacity Utilization	93.4%	ICU Level of Service	F
Analysis Period (min)	15		
c Critical Lane Group			

Movement	EBL	EBT	EBR	WBL	WBT	WBR	NBL	NBT	NBR	SBL	SBT	SBR
Lane Configurations												
Volume (vph)	88	604	578	18	189	162	109	1907	61	391	2726	310
Ideal Flow (vphpl)	1900	1900	1900	1900	1900	1900	1900	1900	1900	1900	1900	1900
Total Lost time (s)	6.0	6.0	6.0	6.0	6.0	6.0	6.0	6.0		6.0	6.0	6.0
Lane Util. Factor	0.91	0.91	1.00	0.91	0.91	1.00	1.00	0.91		1.00	0.91	1.00
Frt	1.00	1.00	0.85	1.00	1.00	0.85	1.00	1.00		1.00	1.00	0.85
Flt Protected	0.95	1.00	1.00	0.95	1.00	1.00	0.95	1.00		0.95	1.00	1.00
Satd. Flow (prot)	1610	3388	1583	1610	3389	1583	1770	5062		1770	5085	1583
Flt Permitted	0.95	1.00	1.00	0.95	1.00	1.00	0.95	1.00		0.06	1.00	1.00
Satd. Flow (perm)	1610	3388	1583	1610	3389	1583	1770	5062		120	5085	1583
Peak-hour factor, PHF	0.95	0.95	0.95	0.95	0.95	0.95	0.95	0.95	0.95	0.95	0.95	0.95
Adj. Flow (vph)	93	636	608	19	199	171	115	2007	64	412	2869	326
RTOR Reduction (vph)	0	0	191	0	0	155	0	3	0	0	0	141
Lane Group Flow (vph)	84	645	417	17	201	16	115	2068	0	412	2869	185
Turn Type	Split		Perm	Split		Perm	Prot			pm+pt		Perm
Protected Phases	4	4		8	8		5	2		1	6	
Permitted Phases			4			8				6		6
Actuated Green, G (s)	29.0	29.0	29.0	13.8	13.8	13.8	9.2	56.0		89.2	74.0	74.0
Effective Green, g (s)	29.0	29.0	29.0	13.8	13.8	13.8	9.2	56.0		89.2	74.0	74.0
Actuated g/C Ratio	0.19	0.19	0.19	0.09	0.09	0.09	0.06	0.37		0.59	0.49	0.49
Clearance Time (s)	6.0	6.0	6.0	6.0	6.0	6.0	6.0	6.0		6.0	6.0	6.0
Vehicle Extension (s)	3.0	3.0	3.0	3.0	3.0	3.0	3.0	3.0		3.0	3.0	3.0
Lane Grp Cap (vph)	311	655	306	148	312	146	109	1890		371	2509	781
v/s Ratio Prot	0.05	0.19		0.01	c0.06		0.06	0.41		c0.20	c0.56	
v/s Ratio Perm			c0.26			0.01				0.46		0.12
v/c Ratio	0.27	0.98	1.36	0.11	0.64	0.11	1.06	1.09		1.11	1.14	0.24
Uniform Delay, d1	51.5	60.3	60.5	62.5	65.7	62.5	70.4	47.0		51.5	38.0	21.8
Progression Factor	0.92	0.94	0.90	1.00	1.00	1.00	1.00	1.00		1.06	1.15	2.89
Incremental Delay, d2	0.5	30.5	182.1	0.3	4.5	0.3	101.8	51.6		53.8	65.1	0.1
Delay (s)	47.9	87.4	236.3	62.8	70.2	62.8	172.2	98.6		108.1	108.9	63.0
Level of Service	D	F	F	E	E	E	F	F		F	F	E
Approach Delay (s)		152.6			66.6			102.5			104.7	
Approach LOS		F			E			F			F	

Intersection Summary			
HCM Average Control Delay	110.6	HCM Level of Service	F
HCM Volume to Capacity ratio	1.17		
Actuated Cycle Length (s)	150.0	Sum of lost time (s)	24.0
Intersection Capacity Utilization	108.7%	ICU Level of Service	G
Analysis Period (min)	15		
c Critical Lane Group			

Movement	EBL	EBT	WBT	WBR	SBL	SBR
Lane Configurations						
Volume (vph)	1295	2762	2384	10	0	498
Ideal Flow (vphpl)	1900	1900	1900	1900	1900	1900
Total Lost time (s)	6.0	4.0	6.0	6.0		4.0
Lane Util. Factor	0.94	0.95	0.95	1.00		1.00
Frt	1.00	1.00	1.00	0.85		0.86
Flt Protected	0.95	1.00	1.00	1.00		1.00
Satd. Flow (prot)	4990	3539	3539	1583		1611
Flt Permitted	0.95	1.00	1.00	1.00		1.00
Satd. Flow (perm)	4990	3539	3539	1583		1611
Peak-hour factor, PHF	0.95	0.95	0.95	0.95	0.95	0.95
Adj. Flow (vph)	1363	2907	2509	11	0	524
RTOR Reduction (vph)	0	0	0	0	0	0
Lane Group Flow (vph)	1363	2907	2509	11	0	524
Turn Type	Prot			Perm		Free
Protected Phases	1	Free	2			
Permitted Phases				2		Free
Actuated Green, G (s)	38.0	150.0	100.0	100.0		150.0
Effective Green, g (s)	38.0	150.0	100.0	100.0		150.0
Actuated g/C Ratio	0.25	1.00	0.67	0.67		1.00
Clearance Time (s)	6.0		6.0	6.0		
Vehicle Extension (s)	3.0		3.0	3.0		
Lane Grp Cap (vph)	1264	3539	2359	1055		1611
v/s Ratio Prot	c0.27	0.82	c0.71			
v/s Ratio Perm				0.01		0.33
v/c Ratio	1.08	0.82	1.06	0.01		0.33
Uniform Delay, d1	56.0	0.0	25.0	8.4		0.0
Progression Factor	1.00	1.00	1.29	1.71		1.00
Incremental Delay, d2	49.3	2.3	29.7	0.0		0.5
Delay (s)	105.3	2.3	61.9	14.4		0.5
Level of Service	F	A	E	B		A
Approach Delay (s)		35.2	61.7		0.5	
Approach LOS		D	E		A	

Intersection Summary			
HCM Average Control Delay	41.8	HCM Level of Service	D
HCM Volume to Capacity ratio	1.07		
Actuated Cycle Length (s)	150.0	Sum of lost time (s)	12.0
Intersection Capacity Utilization	100.5%	ICU Level of Service	G
Analysis Period (min)	15		
c Critical Lane Group			

Movement	EBL	EBT	EBR	WBL	WBT	WBR	NBL	NBT	NBR	SBL	SBT	SBR
Lane Configurations												
Volume (vph)	550	145	80	148	195	80	50	250	50	76	303	303
Ideal Flow (vphpl)	1900	1900	1900	1900	1900	1900	1900	1900	1900	1900	1900	1900
Total Lost time (s)	6.0	6.0	4.0	6.0	6.0		6.0	6.0		6.0	6.0	6.0
Lane Util. Factor	0.97	0.95	1.00	1.00	0.95		1.00	0.95		1.00	0.95	0.88
Frt	1.00	1.00	0.85	1.00	0.96		1.00	0.97		1.00	1.00	0.85
Flt Protected	0.95	1.00	1.00	0.95	1.00		0.95	1.00		0.95	1.00	1.00
Satd. Flow (prot)	3433	3539	1583	1770	3385		1770	3450		1770	3539	2787
Flt Permitted	0.95	1.00	1.00	0.95	1.00		0.95	1.00		0.95	1.00	1.00
Satd. Flow (perm)	3433	3539	1583	1770	3385		1770	3450		1770	3539	2787
Peak-hour factor, PHF	0.95	0.95	0.95	0.95	0.95	0.95	0.95	0.95	0.95	0.95	0.95	0.95
Adj. Flow (vph)	579	153	84	156	205	84	53	263	53	80	319	319
RTOR Reduction (vph)	0	0	0	0	23	0	0	12	0	0	0	196
Lane Group Flow (vph)	579	153	84	156	266	0	53	304	0	80	319	123
Turn Type	Prot		Free	Prot			Split			Split		pt+ov
Protected Phases	1	6		5	2		4	4		8	8	8 1
Permitted Phases			Free									
Actuated Green, G (s)	32.3	69.4	150.0	18.5	55.6		18.4	18.4		19.7	19.7	58.0
Effective Green, g (s)	32.3	69.4	150.0	18.5	55.6		18.4	18.4		19.7	19.7	58.0
Actuated g/C Ratio	0.22	0.46	1.00	0.12	0.37		0.12	0.12		0.13	0.13	0.39
Clearance Time (s)	6.0	6.0		6.0	6.0		6.0	6.0		6.0	6.0	
Vehicle Extension (s)	3.0	3.0		3.0	3.0		3.0	3.0		3.0	3.0	
Lane Grp Cap (vph)	739	1637	1583	218	1255		217	423		232	465	1078
v/s Ratio Prot	c0.17	0.04		0.09	c0.08		0.03	c0.09		0.05	c0.09	0.04
v/s Ratio Perm			0.05									
v/c Ratio	0.78	0.09	0.05	0.72	0.21		0.24	0.72		0.34	0.69	0.11
Uniform Delay, d1	55.5	22.6	0.0	63.2	32.2		59.5	63.3		59.3	62.2	29.5
Progression Factor	0.30	0.79	1.00	1.31	0.60		0.99	1.00		1.00	1.00	1.00
Incremental Delay, d2	0.5	0.0	0.0	10.1	0.4		0.6	5.5		0.9	4.2	0.0
Delay (s)	17.4	17.9	0.0	93.1	19.6		59.5	68.9		60.2	66.4	29.6
Level of Service	B	B	A	F	B		E	E		E	E	C
Approach Delay (s)		15.7			45.4			67.5			49.3	
Approach LOS		B			D			E			D	

Intersection Summary			
HCM Average Control Delay	39.7	HCM Level of Service	D
HCM Volume to Capacity ratio	0.51		
Actuated Cycle Length (s)	150.0	Sum of lost time (s)	24.0
Intersection Capacity Utilization	56.4%	ICU Level of Service	B
Analysis Period (min)	15		
c Critical Lane Group			

Intersection Sign configuration not allowed in HCM analysis.

Movement	EBL	EBT	EBR	WBL	WBT	WBR	NBL	NBT	NBR	SBL	SBT	SBR
Lane Configurations												
Volume (vph)	87	15	134	5	25	15	58	317	5	0	736	285
Ideal Flow (vphpl)	1900	1900	1900	1900	1900	1900	1900	1900	1900	1900	1900	1900
Total Lost time (s)		6.0	6.0	6.0	6.0		6.0	6.0			6.0	
Lane Util. Factor		1.00	0.88	1.00	1.00		0.97	0.95			0.95	
Frt		1.00	0.85	1.00	0.94		1.00	1.00			0.96	
Flt Protected		0.96	1.00	0.95	1.00		0.95	1.00			1.00	
Satd. Flow (prot)		1787	2787	1770	1756		3433	3531			3391	
Flt Permitted		0.96	1.00	0.69	1.00		0.95	1.00			1.00	
Satd. Flow (perm)		1787	2787	1280	1756		3433	3531			3391	
Peak-hour factor, PHF	0.95	0.95	0.95	0.95	0.95	0.95	0.95	0.95	0.95	0.95	0.95	0.95
Adj. Flow (vph)	92	16	141	5	26	16	61	334	5	0	775	300
RTOR Reduction (vph)	0	0	127	0	15	0	0	1	0	0	20	0
Lane Group Flow (vph)	0	108	14	5	27	0	61	338	0	0	1055	0
Turn Type	Split		Perm	Perm			Prot			Perm		
Protected Phases	4	4			8		5	2			6	
Permitted Phases			4	8						6		
Actuated Green, G (s)		14.4	14.4	9.2	9.2		6.9	108.4			95.5	
Effective Green, g (s)		14.4	14.4	9.2	9.2		6.9	108.4			95.5	
Actuated g/C Ratio		0.10	0.10	0.06	0.06		0.05	0.72			0.64	
Clearance Time (s)		6.0	6.0	6.0	6.0		6.0	6.0			6.0	
Vehicle Extension (s)		3.0	3.0	3.0	3.0		3.0	3.0			3.0	
Lane Grp Cap (vph)		172	268	79	108		158	2552			2159	
v/s Ratio Prot		c0.06			c0.02		c0.02	0.10			c0.31	
v/s Ratio Perm			0.00	0.00								
v/c Ratio		0.63	0.05	0.06	0.25		0.39	0.13			0.49	
Uniform Delay, d1		65.2	61.6	66.3	67.1		69.5	6.4			14.4	
Progression Factor		0.69	1.53	1.00	1.00		1.07	0.39			1.47	
Incremental Delay, d2		6.9	0.1	0.3	1.2		1.5	0.1			0.1	
Delay (s)		51.9	94.3	66.7	68.3		76.2	2.6			21.1	
Level of Service		D	F	E	E		E	A			C	
Approach Delay (s)		75.9			68.2			13.8			21.1	
Approach LOS		E			E			B			C	

Intersection Summary			
HCM Average Control Delay	28.4	HCM Level of Service	C
HCM Volume to Capacity ratio	0.48		
Actuated Cycle Length (s)	150.0	Sum of lost time (s)	24.0
Intersection Capacity Utilization	52.5%	ICU Level of Service	A
Analysis Period (min)	15		
c Critical Lane Group			

Movement	EBL	EBT	EBR	WBL	WBT	WBR	NBL	NBT	NBR	SBL	SBT	SBR
Lane Configurations												
Volume (vph)	75	866	1900	170	1196	40	1038	235	20	30	303	148
Ideal Flow (vphpl)	1900	1900	1900	1900	1900	1900	1900	1900	1900	1900	1900	1900
Total Lost time (s)	6.0	6.0	6.0	6.0	6.0		6.0	6.0		6.0	6.0	6.0
Lane Util. Factor	1.00	0.95	1.00	1.00	0.95		0.97	0.95		1.00	1.00	1.00
Frt	1.00	1.00	0.85	1.00	1.00		1.00	0.99		1.00	1.00	0.85
Flt Protected	0.95	1.00	1.00	0.95	1.00		0.95	1.00		0.95	1.00	1.00
Satd. Flow (prot)	1770	3539	1583	1770	3522		3433	3498		1770	1863	1583
Flt Permitted	0.08	1.00	1.00	0.24	1.00		0.95	1.00		0.95	1.00	1.00
Satd. Flow (perm)	156	3539	1583	446	3522		3433	3498		1770	1863	1583
Peak-hour factor, PHF	0.95	0.95	0.95	0.95	0.95	0.95	0.95	0.95	0.95	0.95	0.95	0.95
Adj. Flow (vph)	79	912	2000	179	1259	42	1093	247	21	32	319	156
RTOR Reduction (vph)	0	0	245	0	2	0	0	4	0	0	0	60
Lane Group Flow (vph)	79	912	1755	179	1299	0	1093	264	0	32	319	96
Turn Type	pm+pt		Perm	pm+pt			Prot			Prot		Perm
Protected Phases	7	4		3	8		5	2		1	6	
Permitted Phases	4		4	8								6
Actuated Green, G (s)	84.0	76.0	76.0	76.0	72.0		24.0	42.4		3.6	22.0	22.0
Effective Green, g (s)	84.0	76.0	76.0	76.0	72.0		24.0	42.4		3.6	22.0	22.0
Actuated g/C Ratio	0.56	0.51	0.51	0.51	0.48		0.16	0.28		0.02	0.15	0.15
Clearance Time (s)	6.0	6.0	6.0	6.0	6.0		6.0	6.0		6.0	6.0	6.0
Vehicle Extension (s)	3.0	3.0	3.0	3.0	3.0		3.0	3.0		3.0	3.0	3.0
Lane Grp Cap (vph)	173	1793	802	261	1691		549	989		42	273	232
v/s Ratio Prot	c0.02	0.26		0.02	0.37		c0.32	0.08		0.02	c0.17	
v/s Ratio Perm	0.23		c1.11	0.33								0.06
v/c Ratio	0.46	0.51	2.19	0.69	0.77		1.99	0.27		0.76	1.17	0.41
Uniform Delay, d1	24.0	24.6	37.0	29.6	32.1		63.0	41.7		72.8	64.0	58.2
Progression Factor	1.00	1.00	1.00	0.61	0.38		1.01	1.31		0.83	0.65	0.98
Incremental Delay, d2	1.1	0.1	537.3	5.3	1.6		448.9	0.3		53.0	106.1	5.0
Delay (s)	25.1	24.7	574.3	23.4	13.7		512.7	54.8		113.1	147.9	61.7
Level of Service	C	C	F	C	B		F	D		F	F	E
Approach Delay (s)		392.2			14.8			422.6			119.2	
Approach LOS		F			B			F			F	

Intersection Summary			
HCM Average Control Delay	288.8	HCM Level of Service	F
HCM Volume to Capacity ratio	1.93		
Actuated Cycle Length (s)	150.0	Sum of lost time (s)	24.0
Intersection Capacity Utilization	158.0%	ICU Level of Service	H
Analysis Period (min)	15		
c Critical Lane Group			

Movement	EBL	EBT	EBR	WBL	WBT	WBR	NBL	NBT	NBR	SBL	SBT	SBR
Lane Configurations												
Volume (vph)	62	660	144	1095	1105	281	102	34	146	224	647	55
Ideal Flow (vphpl)	1900	1900	1900	1900	1900	1900	1900	1900	1900	1900	1900	1900
Lane Width	11	11	11	11	11	11	11	11	11	11	11	11
Total Lost time (s)	6.0	6.0		6.0	6.0	6.0	6.0	6.0		6.0	6.0	
Lane Util. Factor	1.00	0.95		1.00	0.95	0.88	1.00	1.00		0.97	1.00	
Frt	1.00	0.97		1.00	1.00	0.85	1.00	0.88		1.00	0.99	
Flt Protected	0.95	1.00		0.95	1.00	1.00	0.95	1.00		0.95	1.00	
Satd. Flow (prot)	1711	3329		1711	3421	2694	1711	1582		3319	1779	
Flt Permitted	0.24	1.00		0.12	1.00	1.00	0.95	1.00		0.95	1.00	
Satd. Flow (perm)	439	3329		218	3421	2694	1711	1582		3319	1779	
Peak-hour factor, PHF	0.95	0.95	0.95	0.95	0.95	0.95	0.95	0.95	0.95	0.95	0.95	0.95
Adj. Flow (vph)	65	695	152	1153	1163	296	107	36	154	236	681	58
RTOR Reduction (vph)	0	12	0	0	0	0	0	105	0	0	2	0
Lane Group Flow (vph)	65	835	0	1153	1163	296	107	85	0	236	737	0
Turn Type	pm+pt			pm+pt		pt+ov	Split			Split		
Protected Phases	1	6		5	2	2 8	4	4		8	8	
Permitted Phases	6			2								
Actuated Green, G (s)	32.6	27.0		79.0	67.4	106.4	14.0	14.0		39.0	39.0	
Effective Green, g (s)	32.6	27.0		79.0	67.4	106.4	14.0	14.0		39.0	39.0	
Actuated g/C Ratio	0.22	0.18		0.53	0.45	0.71	0.09	0.09		0.26	0.26	
Clearance Time (s)	6.0	6.0		6.0	6.0		6.0	6.0		6.0	6.0	
Vehicle Extension (s)	3.0	3.0		3.0	3.0		3.0	3.0		3.0	3.0	
Lane Grp Cap (vph)	143	599		573	1537	1911	160	148		863	463	
v/s Ratio Prot	0.02	0.25		c0.62	0.34	0.11	c0.06	0.05		0.07	c0.41	
v/s Ratio Perm	0.08			c0.44								
v/c Ratio	0.45	1.39		2.01	0.76	0.15	0.67	0.57		0.27	1.59	
Uniform Delay, d1	47.8	61.5		54.2	34.5	7.1	65.8	65.1		44.2	55.5	
Progression Factor	0.69	0.68		1.07	1.40	1.35	1.08	1.30		0.74	0.81	
Incremental Delay, d2	2.0	186.0		457.7	1.3	0.0	10.0	5.2		0.2	275.4	
Delay (s)	35.2	227.5		515.7	49.5	9.7	81.2	89.8		32.7	320.2	
Level of Service	D	F		F	D	A	F	F		C	F	
Approach Delay (s)		213.8			250.8			86.7			250.6	
Approach LOS		F			F			F			F	

Intersection Summary			
HCM Average Control Delay	233.6	HCM Level of Service	F
HCM Volume to Capacity ratio	1.70		
Actuated Cycle Length (s)	150.0	Sum of lost time (s)	18.0
Intersection Capacity Utilization	146.5%	ICU Level of Service	H
Analysis Period (min)	15		

c Critical Lane Group

Movement	EBL	EBT	EBR	WBL	WBT	WBR	NBL	NBT	NBR	SBL	SBT	SBR
Lane Configurations												
Volume (vph)	60	982	134	225	2248	140	41	0	60	95	0	30
Ideal Flow (vphpl)	1900	1900	1900	1900	1900	1900	1900	1900	1900	1900	1900	1900
Total Lost time (s)	6.0	6.0		6.0	6.0	6.0	6.0	6.0		6.0	6.0	
Lane Util. Factor	1.00	0.95		1.00	0.95	1.00	1.00	1.00		0.95	0.95	
Frt	1.00	0.98		1.00	1.00	0.85	1.00	0.85		1.00	0.93	
Flt Protected	0.95	1.00		0.95	1.00	1.00	0.95	1.00		0.95	0.98	
Satd. Flow (prot)	1770	3476		1770	3539	1583	1770	1583		1681	1597	
Flt Permitted	0.04	1.00		0.21	1.00	1.00	0.95	1.00		0.95	0.98	
Satd. Flow (perm)	78	3476		398	3539	1583	1770	1583		1681	1597	
Peak-hour factor, PHF	0.95	0.95	0.95	0.95	0.95	0.95	0.95	0.95	0.95	0.95	0.95	0.95
Adj. Flow (vph)	63	1034	141	237	2366	147	43	0	63	100	0	32
RTOR Reduction (vph)	0	7	0	0	0	31	0	56	0	0	24	0
Lane Group Flow (vph)	63	1168	0	237	2366	116	43	7	0	68	40	0
Turn Type	pm+pt			Perm		Perm	Split			Split		
Protected Phases	7	4			8		2	2		6	6	
Permitted Phases	4			8		8						
Actuated Green, G (s)	100.0	100.0		90.0	90.0	90.0	16.0	16.0		16.0	16.0	
Effective Green, g (s)	100.0	100.0		90.0	90.0	90.0	16.0	16.0		16.0	16.0	
Actuated g/C Ratio	0.67	0.67		0.60	0.60	0.60	0.11	0.11		0.11	0.11	
Clearance Time (s)	6.0	6.0		6.0	6.0	6.0	6.0	6.0		6.0	6.0	
Vehicle Extension (s)	3.0	3.0		3.0	3.0	3.0	3.0	3.0		3.0	3.0	
Lane Grp Cap (vph)	97	2317		239	2123	950	189	169		179	170	
v/s Ratio Prot	0.02	c0.34			c0.67		c0.02	0.00		c0.04	0.02	
v/s Ratio Perm	0.42			0.60		0.07						
v/c Ratio	0.65	0.50		0.99	1.11	0.12	0.23	0.04		0.38	0.23	
Uniform Delay, d1	73.7	12.6		29.6	30.0	12.9	61.3	60.1		62.4	61.4	
Progression Factor	2.42	0.35		0.89	0.90	0.60	1.00	1.00		1.00	1.00	
Incremental Delay, d2	13.4	0.2		55.2	58.6	0.1	2.8	0.4		6.0	3.2	
Delay (s)	191.9	4.5		81.4	85.8	7.9	64.1	60.5		68.4	64.6	
Level of Service	F	A		F	F	A	E	E		E	E	
Approach Delay (s)		14.0			81.2			62.0			66.6	
Approach LOS		B			F			E			E	

Intersection Summary			
HCM Average Control Delay	60.6	HCM Level of Service	E
HCM Volume to Capacity ratio	0.90		
Actuated Cycle Length (s)	150.0	Sum of lost time (s)	24.0
Intersection Capacity Utilization	90.7%	ICU Level of Service	E
Analysis Period (min)	15		
c Critical Lane Group			

Movement	WBL	WBR	NBT	NBR	SBL	SBT
Lane Configurations						
Volume (vph)	458	0	92	154	49	120
Ideal Flow (vphpl)	1900	1900	1900	1900	1900	1900
Total Lost time (s)	6.0		6.0	6.0	6.0	6.0
Lane Util. Factor	1.00		1.00	1.00	1.00	1.00
Frt	1.00		1.00	0.85	1.00	1.00
Flt Protected	0.95		1.00	1.00	0.95	1.00
Satd. Flow (prot)	1770		1863	1583	1770	1863
Flt Permitted	0.95		1.00	1.00	0.69	1.00
Satd. Flow (perm)	1770		1863	1583	1293	1863
Peak-hour factor, PHF	0.95	0.95	0.95	0.95	0.95	0.95
Adj. Flow (vph)	482	0	97	162	52	126
RTOR Reduction (vph)	0	0	0	85	0	0
Lane Group Flow (vph)	482	0	97	77	52	126
Turn Type		Perm		Perm	Perm	
Protected Phases	8		2			6
Permitted Phases		8		2	6	
Actuated Green, G (s)	27.4		35.6	35.6	35.6	35.6
Effective Green, g (s)	27.4		35.6	35.6	35.6	35.6
Actuated g/C Ratio	0.37		0.47	0.47	0.47	0.47
Clearance Time (s)	6.0		6.0	6.0	6.0	6.0
Vehicle Extension (s)	3.0		3.0	3.0	3.0	3.0
Lane Grp Cap (vph)	647		884	751	614	884
v/s Ratio Prot	c0.27		0.05			c0.07
v/s Ratio Perm				0.05	0.04	
v/c Ratio	0.74		0.11	0.10	0.08	0.14
Uniform Delay, d1	20.8		10.9	10.9	10.8	11.1
Progression Factor	0.62		1.14	1.90	1.00	1.00
Incremental Delay, d2	3.9		0.2	0.3	0.3	0.3
Delay (s)	16.9		12.7	21.0	11.1	11.4
Level of Service	B		B	C	B	B
Approach Delay (s)	16.9		17.9			11.3
Approach LOS	B		B			B

Intersection Summary			
HCM Average Control Delay	16.1	HCM Level of Service	B
HCM Volume to Capacity ratio	0.40		
Actuated Cycle Length (s)	75.0	Sum of lost time (s)	12.0
Intersection Capacity Utilization	44.8%	ICU Level of Service	A
Analysis Period (min)	15		
c Critical Lane Group			

Movement	EBL	EBT	EBR	WBL	WBT	WBR	NBL	NBT	NBR	SBL	SBT	SBR
Lane Configurations												
Volume (vph)	85	119	55	0	227	182	90	341	0	159	609	229
Ideal Flow (vphpl)	1900	1900	1900	1900	1900	1900	1900	1900	1900	1900	1900	1900
Total Lost time (s)	6.0	6.0	6.0		6.0	6.0		6.0		6.0	6.0	
Lane Util. Factor	1.00	0.95	1.00		0.95	1.00		0.95		0.91	0.91	
Frt	1.00	1.00	0.85		1.00	0.85		1.00		1.00	0.96	
Flt Protected	0.95	1.00	1.00		1.00	1.00		0.99		0.95	1.00	
Satd. Flow (prot)	1770	3539	1583		3539	1583		3503		1610	3251	
Flt Permitted	0.32	1.00	1.00		1.00	1.00		0.99		0.95	1.00	
Satd. Flow (perm)	598	3539	1583		3539	1583		3503		1610	3251	
Peak-hour factor, PHF	0.95	0.95	0.95	0.95	0.95	0.95	0.95	0.95	0.95	0.95	0.95	0.95
Adj. Flow (vph)	89	125	58	0	239	192	95	359	0	167	641	241
RTOR Reduction (vph)	0	0	46	0	0	172	0	0	0	0	23	0
Lane Group Flow (vph)	89	125	12	0	239	20	0	454	0	150	876	0
Turn Type	pm+pt		Perm			Perm	Split			Split		
Protected Phases	7	4			8		2	2		6	6	
Permitted Phases	4		4			8						
Actuated Green, G (s)	31.9	31.9	31.9		15.6	15.6		42.1		58.0	58.0	
Effective Green, g (s)	31.9	31.9	31.9		15.6	15.6		42.1		58.0	58.0	
Actuated g/C Ratio	0.21	0.21	0.21		0.10	0.10		0.28		0.39	0.39	
Clearance Time (s)	6.0	6.0	6.0		6.0	6.0		6.0		6.0	6.0	
Vehicle Extension (s)	3.0	3.0	3.0		3.0	3.0		3.0		3.0	3.0	
Lane Grp Cap (vph)	208	753	337		368	165		983		623	1257	
v/s Ratio Prot	c0.03	0.04			c0.07			c0.13		0.09	c0.27	
v/s Ratio Perm	0.06		0.01			0.01						
v/c Ratio	0.43	0.17	0.04		0.65	0.12		0.46		0.24	0.70	
Uniform Delay, d1	49.3	48.2	46.9		64.6	61.0		44.6		31.1	38.6	
Progression Factor	1.00	1.00	0.99		0.90	0.66		0.61		0.79	0.79	
Incremental Delay, d2	1.4	0.1	0.0		3.9	0.3		1.0		0.8	2.7	
Delay (s)	50.5	48.3	46.5		62.3	40.4		28.4		25.4	33.2	
Level of Service	D	D	D		E	D		C		C	C	
Approach Delay (s)		48.6			52.6			28.4			32.1	
Approach LOS		D			D			C			C	

Intersection Summary			
HCM Average Control Delay	37.4	HCM Level of Service	D
HCM Volume to Capacity ratio	0.59		
Actuated Cycle Length (s)	150.0	Sum of lost time (s)	24.0
Intersection Capacity Utilization	62.2%	ICU Level of Service	B
Analysis Period (min)	15		
c Critical Lane Group			

Movement	EBL	EBT	EBR	WBL	WBT	WBR	NBL	NBT	NBR	SBL	SBT	SBR
Lane Configurations												
Volume (vph)	15	518	25	10	1486	0	55	0	15	0	0	25
Ideal Flow (vphpl)	1900	1900	1900	1900	1900	1900	1900	1900	1900	1900	1900	1900
Total Lost time (s)	6.0	6.0		6.0	6.0		6.0	6.0			6.0	
Lane Util. Factor	1.00	0.95		1.00	0.95		1.00	1.00			1.00	
Frt	1.00	0.99		1.00	1.00		1.00	0.85			0.86	
Flt Protected	0.95	1.00		0.95	1.00		0.95	1.00			1.00	
Satd. Flow (prot)	1770	3515		1770	3539		1770	1583			1611	
Flt Permitted	0.13	1.00		0.40	1.00		0.74	1.00			1.00	
Satd. Flow (perm)	251	3515		746	3539		1379	1583			1611	
Peak-hour factor, PHF	0.95	0.95	0.95	0.95	0.95	0.95	0.95	0.95	0.95	0.95	0.95	0.95
Adj. Flow (vph)	16	545	26	11	1564	0	58	0	16	0	0	26
RTOR Reduction (vph)	0	2	0	0	0	0	0	13	0	0	21	0
Lane Group Flow (vph)	16	569	0	11	1564	0	58	3	0	0	5	0
Turn Type	Perm			pm+pt			Perm			Perm		
Protected Phases		4		3	8			2			6	
Permitted Phases	4			8			2			6		
Actuated Green, G (s)	103.6	103.6		112.0	112.0		26.0	26.0			26.0	
Effective Green, g (s)	103.6	103.6		112.0	112.0		26.0	26.0			26.0	
Actuated g/C Ratio	0.69	0.69		0.75	0.75		0.17	0.17			0.17	
Clearance Time (s)	6.0	6.0		6.0	6.0		6.0	6.0			6.0	
Vehicle Extension (s)	3.0	3.0		3.0	3.0		3.0	3.0			3.0	
Lane Grp Cap (vph)	173	2428		573	2642		239	274			279	
v/s Ratio Prot		0.16		0.00	c0.44			0.00			0.00	
v/s Ratio Perm	0.06			0.01			c0.04					
v/c Ratio	0.09	0.23		0.02	0.59		0.24	0.01			0.02	
Uniform Delay, d1	7.7	8.6		5.1	8.6		53.5	51.3			51.4	
Progression Factor	0.41	0.38		1.00	1.00		1.00	1.00			1.00	
Incremental Delay, d2	0.2	0.0		0.0	0.4		2.4	0.1			0.1	
Delay (s)	3.3	3.3		5.1	9.0		55.9	51.4			51.5	
Level of Service	A	A		A	A		E	D			D	
Approach Delay (s)		3.3			9.0			54.9			51.5	
Approach LOS		A			A			D			D	

Intersection Summary			
HCM Average Control Delay	9.5	HCM Level of Service	A
HCM Volume to Capacity ratio	0.53		
Actuated Cycle Length (s)	150.0	Sum of lost time (s)	12.0
Intersection Capacity Utilization	60.8%	ICU Level of Service	B
Analysis Period (min)	15		
c Critical Lane Group			

Movement	EBL	EBT	EBR	WBL	WBT	WBR	NBL	NBT	NBR	SBL	SBT	SBR
Lane Configurations												
Volume (vph)	46	1029	1132	154	453	58	570	156	132	201	1487	15
Ideal Flow (vphpl)	1900	1900	1900	1900	1900	1900	1900	1900	1900	1900	1900	1900
Total Lost time (s)	6.0	6.0	6.0	6.0	6.0		6.0	6.0	6.0	6.0	6.0	
Lane Util. Factor	1.00	0.95	1.00	0.97	0.95		0.97	0.95	1.00	1.00	0.95	
Frt	1.00	1.00	0.85	1.00	0.98		1.00	1.00	0.85	1.00	1.00	
Flt Protected	0.95	1.00	1.00	0.95	1.00		0.95	1.00	1.00	0.95	1.00	
Satd. Flow (prot)	1770	3539	1583	3433	3479		3433	3539	1583	1770	3534	
Flt Permitted	0.95	1.00	1.00	0.95	1.00		0.95	1.00	1.00	0.95	1.00	
Satd. Flow (perm)	1770	3539	1583	3433	3479		3433	3539	1583	1770	3534	
Peak-hour factor, PHF	0.95	0.95	0.95	0.95	0.95	0.95	0.95	0.95	0.95	0.95	0.95	0.95
Adj. Flow (vph)	48	1083	1192	162	477	61	600	164	139	212	1565	16
RTOR Reduction (vph)	0	0	173	0	7	0	0	0	124	0	1	0
Lane Group Flow (vph)	48	1083	1019	162	531	0	600	164	15	212	1580	0
Turn Type	Prot		Perm	Prot			Split		Perm	Split		
Protected Phases	7	4		3	8		1	1		2	2	
Permitted Phases			4						1			
Actuated Green, G (s)	7.0	54.3	54.3	12.9	60.2		16.0	16.0	16.0	42.8	42.8	
Effective Green, g (s)	7.0	54.3	54.3	12.9	60.2		16.0	16.0	16.0	42.8	42.8	
Actuated g/C Ratio	0.05	0.36	0.36	0.09	0.40		0.11	0.11	0.11	0.29	0.29	
Clearance Time (s)	6.0	6.0	6.0	6.0	6.0		6.0	6.0	6.0	6.0	6.0	
Vehicle Extension (s)	3.0	3.0	3.0	3.0	3.0		3.0	3.0	3.0	3.0	3.0	
Lane Grp Cap (vph)	83	1281	573	295	1396		366	377	169	505	1008	
v/s Ratio Prot	0.03	0.31		c0.05	c0.15		c0.17	0.05		0.12	c0.45	
v/s Ratio Perm			c0.64						0.01			
v/c Ratio	0.58	0.85	1.78	0.55	0.38		1.64	0.44	0.09	0.42	1.57	
Uniform Delay, d1	70.1	44.0	47.9	65.8	31.7		67.0	62.8	60.4	43.5	53.6	
Progression Factor	1.08	0.74	0.62	0.98	0.87		0.96	0.92	2.43	0.84	0.87	
Incremental Delay, d2	0.9	0.5	351.0	1.9	0.2		297.8	0.7	0.2	1.6	258.6	
Delay (s)	76.7	33.2	380.7	66.4	27.7		361.8	58.4	147.2	38.2	305.2	
Level of Service	E	C	F	E	C		F	E	F	D	F	
Approach Delay (s)		212.4			36.7			273.7			273.7	
Approach LOS		F			D			F			F	

Intersection Summary			
HCM Average Control Delay	219.8	HCM Level of Service	F
HCM Volume to Capacity ratio	1.64		
Actuated Cycle Length (s)	150.0	Sum of lost time (s)	30.0
Intersection Capacity Utilization	131.1%	ICU Level of Service	H
Analysis Period (min)	15		
c Critical Lane Group			

Movement	EBL	EBT	EBR	WBL	WBT	WBR	NBL	NBT	NBR	SBL	SBT	SBR
Lane Configurations												
Volume (vph)	155	861	425	19	318	87	364	41	30	59	46	33
Ideal Flow (vphpl)	1900	1900	1900	1900	1900	1900	1900	1900	1900	1900	1900	1900
Total Lost time (s)	6.0	6.0	6.0	6.0	6.0	6.0	6.0	6.0	6.0	6.0	6.0	
Lane Util. Factor	1.00	0.95	1.00	1.00	0.95	1.00	0.95	0.95	1.00	1.00	1.00	
Frt	1.00	1.00	0.85	1.00	1.00	0.85	1.00	1.00	0.85	1.00	0.94	
Flt Protected	0.95	1.00	1.00	0.95	1.00	1.00	0.95	0.96	1.00	0.95	1.00	
Satd. Flow (prot)	1770	3539	1583	1770	3539	1583	1681	1702	1583	1770	1745	
Flt Permitted	0.55	1.00	1.00	0.16	1.00	1.00	0.95	0.55	1.00	0.95	1.00	
Satd. Flow (perm)	1024	3539	1583	303	3539	1583	1681	966	1583	1770	1745	
Peak-hour factor, PHF	0.95	0.95	0.95	0.95	0.95	0.95	0.95	0.95	0.95	0.95	0.95	0.95
Adj. Flow (vph)	163	906	447	20	335	92	383	43	32	62	48	35
RTOR Reduction (vph)	0	0	300	0	0	62	0	0	20	0	26	0
Lane Group Flow (vph)	163	906	147	20	335	30	211	215	12	62	57	0
Turn Type	Perm		Perm	Perm		Perm	Prot		Perm	Prot		
Protected Phases		4			8		5	2		1	6	
Permitted Phases	4		4	8		8			2			
Actuated Green, G (s)	24.6	24.6	24.6	24.6	24.6	24.6	12.8	38.4	28.2	4.2	19.6	
Effective Green, g (s)	24.6	24.6	24.6	24.6	24.6	24.6	12.8	38.4	28.2	4.2	19.6	
Actuated g/C Ratio	0.33	0.33	0.33	0.33	0.33	0.33	0.17	0.51	0.38	0.06	0.26	
Clearance Time (s)	6.0	6.0	6.0	6.0	6.0	6.0	6.0	6.0	6.0	6.0	6.0	
Vehicle Extension (s)	3.0	3.0	3.0	3.0	3.0	3.0	3.0	3.0	3.0	3.0	3.0	
Lane Grp Cap (vph)	336	1161	519	99	1161	519	287	620	595	99	456	
v/s Ratio Prot		c0.26			0.09		c0.13	0.06		0.04	0.03	
v/s Ratio Perm	0.16		0.09	0.07		0.02		c0.12	0.01			
v/c Ratio	0.49	0.78	0.28	0.20	0.29	0.06	0.74	0.35	0.02	0.63	0.13	
Uniform Delay, d1	20.1	22.8	18.7	18.1	18.7	17.3	29.5	10.9	14.7	34.6	21.2	
Progression Factor	1.17	1.17	6.24	0.35	0.36	0.24	0.96	0.96	0.95	1.15	0.78	
Incremental Delay, d2	3.4	3.6	0.9	0.4	0.1	0.0	9.4	0.3	0.1	11.7	0.6	
Delay (s)	26.9	30.2	117.4	6.7	6.7	4.1	37.7	10.8	14.0	51.6	17.0	
Level of Service	C	C	F	A	A	A	D	B	B	D	B	
Approach Delay (s)		55.6			6.2			23.4			31.8	
Approach LOS		E			A			C			C	

Intersection Summary			
HCM Average Control Delay	39.9	HCM Level of Service	D
HCM Volume to Capacity ratio	0.58		
Actuated Cycle Length (s)	75.0	Sum of lost time (s)	12.0
Intersection Capacity Utilization	60.0%	ICU Level of Service	B
Analysis Period (min)	15		
c Critical Lane Group			

Movement	EBL	EBR	NBL	NBT	SBT	SBR
Lane Configurations						
Volume (veh/h)	110	149	97	137	272	240
Sign Control	Stop			Free	Free	
Grade	0%			0%	0%	
Peak Hour Factor	0.95	0.95	0.95	0.95	0.95	0.95
Hourly flow rate (vph)	116	157	102	144	286	253
Pedestrians						
Lane Width (ft)						
Walking Speed (ft/s)						
Percent Blockage						
Right turn flare (veh)						
Median type				None	None	
Median storage veh)						
Upstream signal (ft)					1305	
pX, platoon unblocked						
vC, conflicting volume	635	286	539			
vC1, stage 1 conf vol						
vC2, stage 2 conf vol						
vCu, unblocked vol	635	286	539			
tC, single (s)	6.4	6.2	4.1			
tC, 2 stage (s)						
tF (s)	3.5	3.3	2.2			
p0 queue free %	71	79	90			
cM capacity (veh/h)	399	753	1029			

Direction, Lane #	EB 1	EB 2	NB 1	NB 2	SB 1	SB 2
Volume Total	116	157	102	144	286	253
Volume Left	116	0	102	0	0	0
Volume Right	0	157	0	0	0	253
cSH	399	753	1029	1700	1700	1700
Volume to Capacity	0.29	0.21	0.10	0.08	0.17	0.15
Queue Length 95th (ft)	30	20	8	0	0	0
Control Delay (s)	17.7	11.0	8.9	0.0	0.0	0.0
Lane LOS	C	B	A			
Approach Delay (s)	13.9		3.7		0.0	
Approach LOS	B					

Intersection Summary			
Average Delay	4.4		
Intersection Capacity Utilization	35.8%	ICU Level of Service	A
Analysis Period (min)	15		

Movement	EBL	EBT	EBR	WBL	WBT	WBR	NBL	NBT	NBR	SBL	SBT	SBR
Lane Configurations												
Volume (vph)	13	62	17	332	47	169	1	930	621	440	2317	10
Ideal Flow (vphpl)	1900	1900	1900	1900	1900	1900	1900	1900	1900	1900	1900	1900
Total Lost time (s)		6.0		6.0	6.0		6.0	6.0	6.0	6.0	6.0	
Lane Util. Factor		0.95		0.97	1.00		1.00	0.95	1.00	1.00	0.91	
Frt		0.97		1.00	0.88		1.00	1.00	0.85	1.00	1.00	
Flt Protected		0.99		0.95	1.00		0.95	1.00	1.00	0.95	1.00	
Satd. Flow (prot)		3416		3433	1644		1770	3539	1583	1770	5082	
Flt Permitted		0.99		0.95	1.00		0.06	1.00	1.00	0.15	1.00	
Satd. Flow (perm)		3416		3433	1644		116	3539	1583	278	5082	
Peak-hour factor, PHF	0.95	0.95	0.95	0.95	0.95	0.95	0.95	0.95	0.95	0.95	0.95	0.95
Adj. Flow (vph)	14	65	18	349	49	178	1	979	654	463	2439	11
RTOR Reduction (vph)	0	14	0	0	88	0	0	0	285	0	0	0
Lane Group Flow (vph)	0	83	0	349	139	0	1	979	369	463	2450	0
Turn Type	Split			Split			pm+pt		Perm	pm+pt		
Protected Phases	4	4		8	8		5	2		1	6	
Permitted Phases							2		2	6		
Actuated Green, G (s)		11.0		18.6	18.6		65.3	64.2	64.2	102.4	95.3	
Effective Green, g (s)		11.0		18.6	18.6		65.3	64.2	64.2	102.4	95.3	
Actuated g/C Ratio		0.07		0.12	0.12		0.44	0.43	0.43	0.68	0.64	
Clearance Time (s)		6.0		6.0	6.0		6.0	6.0	6.0	6.0	6.0	
Vehicle Extension (s)		3.0		3.0	3.0		3.0	3.0	3.0	3.0	3.0	
Lane Grp Cap (vph)		251		426	204		63	1515	678	510	3229	
v/s Ratio Prot		c0.02		c0.10	0.08		0.00	0.28		c0.19	0.48	
v/s Ratio Perm							0.01		0.23	c0.42		
v/c Ratio		0.33		0.82	0.68		0.02	0.65	0.54	0.91	0.76	
Uniform Delay, d1		66.0		64.1	62.9		24.9	33.9	32.0	34.6	19.3	
Progression Factor		1.00		0.65	0.58		0.22	0.44	0.80	1.65	0.54	
Incremental Delay, d2		0.8		11.3	8.8		0.1	1.7	2.4	2.5	0.2	
Delay (s)		66.8		53.2	45.2		5.5	16.6	27.9	59.7	10.5	
Level of Service		E		D	D		A	B	C	E	B	
Approach Delay (s)		66.8			50.0			21.1			18.4	
Approach LOS		E			D			C			B	

Intersection Summary			
HCM Average Control Delay	23.6	HCM Level of Service	C
HCM Volume to Capacity ratio	0.83		
Actuated Cycle Length (s)	150.0	Sum of lost time (s)	18.0
Intersection Capacity Utilization	81.2%	ICU Level of Service	D
Analysis Period (min)	15		
c Critical Lane Group			

Movement	EBL	EBT	EBR	WBL	WBT	WBR	NBL	NBT	NBR	SBL	SBT	SBR
Lane Configurations												
Volume (vph)	19	1029	79	0	367	108	67	115	0	88	236	106
Ideal Flow (vphpl)	1900	1900	1900	1900	1900	1900	1900	1900	1900	1900	1900	1900
Total Lost time (s)	6.0	6.0			6.0		6.0	6.0		6.0	6.0	
Lane Util. Factor	1.00	0.95			0.95		1.00	0.95		1.00	0.95	
Frt	1.00	0.99			0.97		1.00	1.00		1.00	0.95	
Flt Protected	0.95	1.00			1.00		0.95	1.00		0.95	1.00	
Satd. Flow (prot)	1770	3501			3418		1770	3539		1770	3374	
Flt Permitted	0.33	1.00			1.00		0.95	1.00		0.95	1.00	
Satd. Flow (perm)	620	3501			3418		1770	3539		1770	3374	
Peak-hour factor, PHF	0.95	0.95	0.95	0.95	0.95	0.95	0.95	0.95	0.95	0.95	0.95	0.95
Adj. Flow (vph)	20	1083	83	0	386	114	71	121	0	93	248	112
RTOR Reduction (vph)	0	4	0	0	23	0	0	0	0	0	36	0
Lane Group Flow (vph)	20	1162	0	0	477	0	71	121	0	93	324	0
Turn Type	pm+pt			pm+pt			Prot			Prot		
Protected Phases	7	4		3	8		5	2		1	6	
Permitted Phases	4			8								
Actuated Green, G (s)	62.0	62.0			51.9		42.4	56.8		13.2	27.6	
Effective Green, g (s)	62.0	62.0			51.9		42.4	56.8		13.2	27.6	
Actuated g/C Ratio	0.41	0.41			0.35		0.28	0.38		0.09	0.18	
Clearance Time (s)	6.0	6.0			6.0		6.0	6.0		6.0	6.0	
Vehicle Extension (s)	3.0	3.0			3.0		3.0	3.0		3.0	3.0	
Lane Grp Cap (vph)	288	1447			1183		500	1340		156	621	
v/s Ratio Prot	0.00	c0.33			0.14		c0.04	0.03		c0.05	c0.10	
v/s Ratio Perm	0.03											
v/c Ratio	0.07	0.80			0.40		0.14	0.09		0.60	0.52	
Uniform Delay, d1	27.1	38.6			37.3		40.2	30.0		65.8	55.2	
Progression Factor	0.61	0.64			0.53		0.76	1.07		1.11	0.99	
Incremental Delay, d2	0.1	2.4			0.2		0.6	0.1		6.0	0.8	
Delay (s)	16.7	27.0			20.1		31.2	32.3		79.4	55.5	
Level of Service	B	C			C		C	C		E	E	
Approach Delay (s)		26.8			20.1			31.9			60.4	
Approach LOS		C			C			C			E	

Intersection Summary			
HCM Average Control Delay	32.3	HCM Level of Service	C
HCM Volume to Capacity ratio	0.57		
Actuated Cycle Length (s)	150.0	Sum of lost time (s)	18.0
Intersection Capacity Utilization	59.6%	ICU Level of Service	B
Analysis Period (min)	15		
c Critical Lane Group			

Movement	EBL	EBT	EBR	WBL	WBT	WBR	NBL	NBT	NBR	SBL	SBT	SBR
Lane Configurations												
Volume (vph)	14	279	87	560	546	10	61	162	294	7	225	22
Ideal Flow (vphpl)	1900	1900	1900	1900	1900	1900	1900	1900	1900	1900	1900	1900
Total Lost time (s)	6.0	6.0		6.0	6.0		6.0	6.0		6.0	6.0	
Lane Util. Factor	1.00	0.95		1.00	0.95		1.00	1.00		1.00	1.00	
Frt	1.00	0.96		1.00	1.00		1.00	0.90		1.00	0.99	
Flt Protected	0.95	1.00		0.95	1.00		0.95	1.00		0.95	1.00	
Satd. Flow (prot)	1593	3071		1593	3176		1593	1515		1593	1654	
Flt Permitted	0.95	1.00		0.95	1.00		0.95	1.00		0.95	1.00	
Satd. Flow (perm)	1593	3071		1593	3176		1593	1515		1593	1654	
Peak-hour factor, PHF	0.95	0.95	0.95	0.95	0.95	0.95	0.95	0.95	0.95	0.95	0.95	0.95
Adj. Flow (vph)	15	294	92	589	575	11	64	171	309	7	237	23
RTOR Reduction (vph)	0	21	0	0	1	0	0	39	0	0	2	0
Lane Group Flow (vph)	15	365	0	589	585	0	64	441	0	7	258	0
Turn Type	Prot			Prot			Prot			Prot		
Protected Phases	5	2		1	6		3	8		7	4	
Permitted Phases												
Actuated Green, G (s)	16.0	15.2		56.0	55.2		9.4	53.4		1.4	45.4	
Effective Green, g (s)	16.0	15.2		56.0	55.2		9.4	53.4		1.4	45.4	
Actuated g/C Ratio	0.11	0.10		0.37	0.37		0.06	0.36		0.01	0.30	
Clearance Time (s)	6.0	6.0		6.0	6.0		6.0	6.0		6.0	6.0	
Vehicle Extension (s)	3.0	3.0		3.0	3.0		3.0	3.0		3.0	3.0	
Lane Grp Cap (vph)	170	311		595	1169		100	539		15	501	
v/s Ratio Prot	0.01	c0.12		c0.37	0.18		c0.04	c0.29		0.00	0.16	
v/s Ratio Perm												
v/c Ratio	0.09	1.17		0.99	0.50		0.64	0.82		0.47	0.51	
Uniform Delay, d1	60.4	67.4		46.7	36.7		68.6	43.9		73.9	43.2	
Progression Factor	1.29	0.72		0.53	0.56		1.00	1.00		1.05	0.83	
Incremental Delay, d2	1.0	106.8		33.0	1.5		13.1	9.4		20.8	3.7	
Delay (s)	79.1	155.0		57.8	22.2		81.8	53.2		98.6	39.4	
Level of Service	E	F		E	C		F	D		F	D	
Approach Delay (s)		152.2			40.0			56.6			40.9	
Approach LOS		F			D			E			D	

Intersection Summary			
HCM Average Control Delay	62.7	HCM Level of Service	E
HCM Volume to Capacity ratio	0.95		
Actuated Cycle Length (s)	150.0	Sum of lost time (s)	24.0
Intersection Capacity Utilization	99.0%	ICU Level of Service	F
Analysis Period (min)	15		
c Critical Lane Group			

Movement	EBL	EBT	EBR	WBL	WBT	WBR	NBL	NBT	NBR	SBL	SBT	SBR
Lane Configurations												
Volume (vph)	5	0	6	231	0	16	32	1533	486	97	2474	37
Ideal Flow (vphpl)	1900	1900	1900	1900	1900	1900	1900	1900	1900	1900	1900	1900
Total Lost time (s)		6.0		6.0		6.0	6.0	6.0		6.0	6.0	
Lane Util. Factor		1.00		1.00		1.00	1.00	0.91		1.00	0.91	
Frt		0.93		1.00		0.85	1.00	0.96		1.00	1.00	
Flt Protected		0.98		0.95		1.00	0.95	1.00		0.95	1.00	
Satd. Flow (prot)		1687		1770		1583	1770	4902		1770	5074	
Flt Permitted		0.98		0.95		1.00	0.04	1.00		0.05	1.00	
Satd. Flow (perm)		1687		1770		1583	76	4902		101	5074	
Peak-hour factor, PHF	0.95	0.95	0.95	0.95	0.95	0.95	0.95	0.95	0.95	0.95	0.95	0.95
Adj. Flow (vph)	5	0	6	243	0	17	34	1614	512	102	2604	39
RTOR Reduction (vph)	0	6	0	0	0	14	0	39	0	0	1	0
Lane Group Flow (vph)	0	5	0	243	0	3	34	2087	0	102	2642	0
Turn Type	Split			custom		custom	Perm			Perm		
Protected Phases	4	4		8				2			6	
Permitted Phases				8		8	2			6		
Actuated Green, G (s)		7.6		26.7		26.7	97.7	97.7		97.7	97.7	
Effective Green, g (s)		7.6		26.7		26.7	97.7	97.7		97.7	97.7	
Actuated g/C Ratio		0.05		0.18		0.18	0.65	0.65		0.65	0.65	
Clearance Time (s)		6.0		6.0		6.0	6.0	6.0		6.0	6.0	
Vehicle Extension (s)		3.0		3.0		3.0	3.0	3.0		3.0	3.0	
Lane Grp Cap (vph)		85		315		282	50	3193		66	3305	
v/s Ratio Prot		c0.00		c0.14				0.43			0.52	
v/s Ratio Perm						0.00	0.45			c1.01		
v/c Ratio		0.06		0.77		0.01	0.68	0.65		1.55	0.80	
Uniform Delay, d1		67.8		58.7		50.8	16.4	15.9		26.1	19.0	
Progression Factor		1.00		0.94		0.98	1.24	0.63		1.22	1.32	
Incremental Delay, d2		0.3		1.1		0.0	40.2	0.7		289.4	1.4	
Delay (s)		68.1		56.0		49.8	60.5	10.7		321.4	26.5	
Level of Service		E		E		D	E	B		F	C	
Approach Delay (s)		68.1			55.6			11.5			37.4	
Approach LOS		E			E			B			D	

Intersection Summary			
HCM Average Control Delay	27.6	HCM Level of Service	C
HCM Volume to Capacity ratio	1.31		
Actuated Cycle Length (s)	150.0	Sum of lost time (s)	18.0
Intersection Capacity Utilization	84.8%	ICU Level of Service	E
Analysis Period (min)	15		
c Critical Lane Group			

Movement	EBL	EBT	EBR	WBL	WBT	WBR	NBL	NBT	NBR	SBL	SBT	SBR
Lane Configurations												
Volume (vph)	184	39	140	414	8	0	164	1830	369	257	2379	77
Ideal Flow (vphpl)	1900	1900	1900	1900	1900	1900	1900	1900	1900	1900	1900	1900
Total Lost time (s)	6.0	6.0		6.0	6.0		6.0	6.0	6.0	6.0	6.0	
Lane Util. Factor	0.97	0.95		0.97	0.95		1.00	0.91	1.00	1.00	0.91	
Frt	1.00	0.88		1.00	1.00		1.00	1.00	0.85	1.00	1.00	
Flt Protected	0.95	1.00		0.95	1.00		0.95	1.00	1.00	0.95	1.00	
Satd. Flow (prot)	3433	3124		3433	3539		1770	5085	1583	1770	5061	
Flt Permitted	0.95	1.00		0.95	1.00		0.06	1.00	1.00	0.05	1.00	
Satd. Flow (perm)	3433	3124		3433	3539		105	5085	1583	97	5061	
Peak-hour factor, PHF	0.95	0.95	0.95	0.95	0.95	0.95	0.95	0.95	0.95	0.95	0.95	0.95
Adj. Flow (vph)	194	41	147	436	8	0	173	1926	388	271	2504	81
RTOR Reduction (vph)	0	114	0	0	0	0	0	0	138	0	2	0
Lane Group Flow (vph)	194	74	0	436	8	0	173	1926	250	271	2583	0
Turn Type	Prot			Prot		Perm	pm+pt		Perm	pm+pt		
Protected Phases	7	4		3	8		5	2		1	6	
Permitted Phases						8	2		2	6		
Actuated Green, G (s)	21.0	13.1		20.0	12.1		85.3	71.2	71.2	98.9	78.8	
Effective Green, g (s)	21.0	13.1		20.0	12.1		85.3	71.2	71.2	98.9	78.8	
Actuated g/C Ratio	0.14	0.09		0.13	0.08		0.57	0.47	0.47	0.66	0.53	
Clearance Time (s)	6.0	6.0		6.0	6.0		6.0	6.0	6.0	6.0	6.0	
Vehicle Extension (s)	3.0	3.0		3.0	3.0		3.0	3.0	3.0	3.0	3.0	
Lane Grp Cap (vph)	481	273		458	285		216	2414	751	306	2659	
v/s Ratio Prot	0.06	c0.02		c0.13	0.00		0.08	0.38		c0.13	c0.51	
v/s Ratio Perm							0.38		0.16	0.46		
v/c Ratio	0.40	0.27		0.95	0.03		0.80	0.80	0.33	0.89	0.97	
Uniform Delay, d1	58.8	64.0		64.5	63.5		45.3	33.3	24.6	49.2	34.5	
Progression Factor	1.00	1.00		0.61	0.64		1.17	0.56	0.15	1.24	0.70	
Incremental Delay, d2	0.6	0.5		27.0	0.0		17.0	2.5	1.1	16.8	8.4	
Delay (s)	59.3	64.5		66.4	40.6		70.1	21.2	4.7	78.0	32.4	
Level of Service	E	E		E	D		E	C	A	E	C	
Approach Delay (s)		61.9			66.0			22.0			36.7	
Approach LOS		E			E			C			D	

Intersection Summary			
HCM Average Control Delay	34.5	HCM Level of Service	C
HCM Volume to Capacity ratio	0.87		
Actuated Cycle Length (s)	150.0	Sum of lost time (s)	18.0
Intersection Capacity Utilization	94.2%	ICU Level of Service	F
Analysis Period (min)	15		
c Critical Lane Group			

Movement	EBL	EBT	EBR	WBL	WBT	WBR	NBL	NBT	NBR	SBL	SBT	SBR
Lane Configurations												
Volume (vph)	0	0	0	123	12	394	212	1807	0	0	2137	778
Ideal Flow (vphpl)	1900	1900	1900	1900	1900	1900	1900	1900	1900	1900	1900	1900
Total Lost time (s)				6.0	6.0	6.0	6.0	6.0			6.0	6.0
Lane Util. Factor				0.95	0.95	1.00	0.97	0.86			0.81	1.00
Frt				1.00	1.00	0.85	1.00	1.00			1.00	0.85
Flt Protected				0.95	0.96	1.00	0.95	1.00			1.00	1.00
Satd. Flow (prot)				1681	1700	1583	3433	6408			7544	1583
Flt Permitted				0.95	0.96	1.00	0.95	1.00			1.00	1.00
Satd. Flow (perm)				1681	1700	1583	3433	6408			7544	1583
Peak-hour factor, PHF	0.95	0.95	0.95	0.95	0.95	0.95	0.95	0.95	0.95	0.95	0.95	0.95
Adj. Flow (vph)	0	0	0	129	13	415	223	1902	0	0	2249	819
RTOR Reduction (vph)	0	0	0	0	0	9	0	0	0	0	0	412
Lane Group Flow (vph)	0	0	0	71	71	406	223	1902	0	0	2249	407
Turn Type				Perm		Perm	Prot					Perm
Protected Phases					8		5	2			6	
Permitted Phases				8		8						6
Actuated Green, G (s)				43.4	43.4	43.4	14.0	94.6			74.6	74.6
Effective Green, g (s)				43.4	43.4	43.4	14.0	94.6			74.6	74.6
Actuated g/C Ratio				0.29	0.29	0.29	0.09	0.63			0.50	0.50
Clearance Time (s)				6.0	6.0	6.0	6.0	6.0			6.0	6.0
Vehicle Extension (s)				3.0	3.0	3.0	3.0	3.0			3.0	3.0
Lane Grp Cap (vph)				486	492	458	320	4041			3752	787
v/s Ratio Prot							c0.06	0.30			c0.30	
v/s Ratio Perm				0.04	0.04	c0.26						0.26
v/c Ratio				0.15	0.14	0.89	0.70	0.47			0.60	0.52
Uniform Delay, d1				39.6	39.5	51.0	65.9	14.5			27.0	25.5
Progression Factor				1.00	1.00	1.00	1.47	0.53			0.51	0.83
Incremental Delay, d2				0.1	0.1	18.4	6.0	0.4			0.3	0.9
Delay (s)				39.7	39.7	69.3	102.8	8.1			14.0	22.2
Level of Service				D	D	E	F	A			B	C
Approach Delay (s)		0.0			61.8			18.1			16.2	
Approach LOS		A			E			B			B	

Intersection Summary			
HCM Average Control Delay	21.3	HCM Level of Service	C
HCM Volume to Capacity ratio	0.70		
Actuated Cycle Length (s)	150.0	Sum of lost time (s)	18.0
Intersection Capacity Utilization	73.1%	ICU Level of Service	D
Analysis Period (min)	15		
c Critical Lane Group			

Movement	EBL	EBT	EBR	WBL	WBT	WBR	NBL	NBT	NBR	SBL	SBT	SBR
Lane Configurations												
Volume (vph)	261	0	441	0	0	0	0	1940	126	224	2467	0
Ideal Flow (vphpl)	1900	1900	1900	1900	1900	1900	1900	1900	1900	1900	1900	1900
Total Lost time (s)	6.0		6.0					6.0		6.0	6.0	
Lane Util. Factor	0.97		0.88					0.76		0.97	0.91	
Frt	1.00		0.85					0.99		1.00	1.00	
Flt Protected	0.95		1.00					1.00		0.95	1.00	
Satd. Flow (prot)	3433		2787					8416		3433	5085	
Flt Permitted	0.95		1.00					1.00		0.95	1.00	
Satd. Flow (perm)	3433		2787					8416		3433	5085	
Peak-hour factor, PHF	0.95	0.95	0.95	0.95	0.95	0.95	0.95	0.95	0.95	0.95	0.95	0.95
Adj. Flow (vph)	275	0	464	0	0	0	0	2042	133	236	2597	0
RTOR Reduction (vph)	0	0	7	0	0	0	0	7	0	0	0	0
Lane Group Flow (vph)	275	0	457	0	0	0	0	2168	0	236	2597	0
Turn Type	custom		custom							Prot		
Protected Phases								2		1	6	
Permitted Phases	4		4									
Actuated Green, G (s)	30.4		30.4					86.3		15.3	107.6	
Effective Green, g (s)	30.4		30.4					86.3		15.3	107.6	
Actuated g/C Ratio	0.20		0.20					0.58		0.10	0.72	
Clearance Time (s)	6.0		6.0					6.0		6.0	6.0	
Vehicle Extension (s)	3.0		3.0					3.0		3.0	3.0	
Lane Grp Cap (vph)	696		565					4842		350	3648	
v/s Ratio Prot								0.26		0.07	c0.51	
v/s Ratio Perm	0.08		c0.16									
v/c Ratio	0.40		0.81					0.45		0.67	0.71	
Uniform Delay, d1	51.8		57.0					18.2		64.9	12.2	
Progression Factor	1.00		1.00					1.00		1.28	0.70	
Incremental Delay, d2	0.4		8.3					0.3		4.5	1.1	
Delay (s)	52.2		65.4					18.5		87.7	9.6	
Level of Service	D		E					B		F	A	
Approach Delay (s)		60.5			0.0			18.5			16.1	
Approach LOS		E			A			B			B	

Intersection Summary			
HCM Average Control Delay	22.7	HCM Level of Service	C
HCM Volume to Capacity ratio	0.73		
Actuated Cycle Length (s)	150.0	Sum of lost time (s)	12.0
Intersection Capacity Utilization	73.1%	ICU Level of Service	D
Analysis Period (min)	15		
c Critical Lane Group			

Movement	WBL	WBR	NBT	NBR	SBL	SBT
Lane Configurations						
Volume (vph)	99	74	164	71	156	1627
Ideal Flow (vphpl)	1900	1900	1900	1900	1900	1900
Total Lost time (s)	6.0		6.0			6.0
Lane Util. Factor	1.00		0.95			0.95
Frt	0.94		0.95			1.00
Flt Protected	0.97		1.00			1.00
Satd. Flow (prot)	1706		3379			3524
Flt Permitted	0.97		1.00			0.87
Satd. Flow (perm)	1706		3379			3097
Peak-hour factor, PHF	0.95	0.95	0.95	0.95	0.95	0.95
Adj. Flow (vph)	104	78	173	75	164	1713
RTOR Reduction (vph)	18	0	16	0	0	0
Lane Group Flow (vph)	164	0	233	0	0	1877
Turn Type					pm+pt	
Protected Phases	8		2		1	6
Permitted Phases					6	
Actuated Green, G (s)	19.0		119.0			119.0
Effective Green, g (s)	19.0		119.0			119.0
Actuated g/C Ratio	0.13		0.79			0.79
Clearance Time (s)	6.0		6.0			6.0
Vehicle Extension (s)	3.0		3.0			3.0
Lane Grp Cap (vph)	216		2681			2457
v/s Ratio Prot	c0.10		0.07			
v/s Ratio Perm						c0.61
v/c Ratio	0.76		0.09			0.76
Uniform Delay, d1	63.3		3.4			8.1
Progression Factor	1.05		1.24			0.94
Incremental Delay, d2	14.0		0.1			0.1
Delay (s)	80.7		4.3			7.8
Level of Service	F		A			A
Approach Delay (s)	80.7		4.3			7.8
Approach LOS	F		A			A

Intersection Summary			
HCM Average Control Delay	13.2	HCM Level of Service	B
HCM Volume to Capacity ratio	0.76		
Actuated Cycle Length (s)	150.0	Sum of lost time (s)	12.0
Intersection Capacity Utilization	81.3%	ICU Level of Service	D
Analysis Period (min)	15		
c Critical Lane Group			

Movement	EBL	EBT	EBR	WBL	WBT	WBR	NBL	NBT	NBR	SBL	SBT	SBR
Lane Configurations												
Volume (vph)	106	26	36	33	85	41	180	1886	52	33	3438	86
Ideal Flow (vphpl)	1900	1900	1900	1900	1900	1900	1900	1900	1900	1900	1900	1900
Total Lost time (s)		6.0	6.0		6.0		6.0	6.0		6.0	6.0	
Lane Util. Factor		1.00	1.00		1.00		1.00	0.86		1.00	0.86	
Frt		1.00	0.85		0.97		1.00	1.00		1.00	1.00	
Flt Protected		0.96	1.00		0.99		0.95	1.00		0.95	1.00	
Satd. Flow (prot)		1791	1583		1779		1770	6382		1770	6384	
Flt Permitted		0.49	1.00		0.81		0.95	1.00		0.95	1.00	
Satd. Flow (perm)		918	1583		1458		1770	6382		1770	6384	
Peak-hour factor, PHF	0.95	0.95	0.95	0.95	0.95	0.95	0.95	0.95	0.95	0.95	0.95	0.95
Adj. Flow (vph)	112	27	38	35	89	43	189	1985	55	35	3619	91
RTOR Reduction (vph)	0	0	32	0	8	0	0	2	0	0	2	0
Lane Group Flow (vph)	0	139	6	0	159	0	189	2038	0	35	3708	0
Turn Type	Perm		Perm	Perm			Prot			Prot		
Protected Phases		4			8		5	2		1	6	
Permitted Phases	4		4	8								
Actuated Green, G (s)		24.2	24.2		24.2		17.6	102.2		5.6	90.2	
Effective Green, g (s)		24.2	24.2		24.2		17.6	102.2		5.6	90.2	
Actuated g/C Ratio		0.16	0.16		0.16		0.12	0.68		0.04	0.60	
Clearance Time (s)		6.0	6.0		6.0		6.0	6.0		6.0	6.0	
Vehicle Extension (s)		3.0	3.0		3.0		3.0	3.0		3.0	3.0	
Lane Grp Cap (vph)		148	255		235		208	4348		66	3839	
v/s Ratio Prot							c0.11	0.32		0.02	c0.58	
v/s Ratio Perm		c0.15	0.00		0.11							
v/c Ratio		0.94	0.02		0.67		0.91	0.47		0.53	0.97	
Uniform Delay, d1		62.2	53.0		59.2		65.4	11.2		70.9	28.4	
Progression Factor		0.82	0.77		1.00		1.26	0.10		0.79	0.90	
Incremental Delay, d2		54.9	0.0		7.4		18.8	0.1		0.7	1.1	
Delay (s)		105.7	40.6		66.6		101.2	1.3		56.4	26.7	
Level of Service		F	D		E		F	A		E	C	
Approach Delay (s)		91.8			66.6			9.8			27.0	
Approach LOS		F			E			A			C	

Intersection Summary			
HCM Average Control Delay	23.8	HCM Level of Service	C
HCM Volume to Capacity ratio	0.95		
Actuated Cycle Length (s)	150.0	Sum of lost time (s)	18.0
Intersection Capacity Utilization	97.3%	ICU Level of Service	F
Analysis Period (min)	15		
c Critical Lane Group			

Movement	WBL	WBR	NBT	NBR	SBL	SBT
Lane Configurations						
Volume (veh/h)	0	114	746	375	0	2748
Sign Control	Stop		Free			Free
Grade	0%		0%			0%
Peak Hour Factor	0.95	0.95	0.95	0.95	0.95	0.95
Hourly flow rate (vph)	0	120	785	395	0	2893
Pedestrians						
Lane Width (ft)						
Walking Speed (ft/s)						
Percent Blockage						
Right turn flare (veh)						
Median type			None			None
Median storage veh)						
Upstream signal (ft)			1039			442
pX, platoon unblocked	0.82	0.84			0.84	
vC, conflicting volume	1947	459			1180	
vC1, stage 1 conf vol						
vC2, stage 2 conf vol						
vCu, unblocked vol	124	0			567	
tC, single (s)	6.8	6.9			4.1	
tC, 2 stage (s)						
tF (s)	3.5	3.3			2.2	
p0 queue free %	100	87			100	
cM capacity (veh/h)	707	915			845	

Direction, Lane #	WB 1	NB 1	NB 2	NB 3	SB 1	SB 2	SB 3
Volume Total	120	314	314	552	964	964	964
Volume Left	0	0	0	0	0	0	0
Volume Right	120	0	0	395	0	0	0
cSH	915	1700	1700	1700	1700	1700	1700
Volume to Capacity	0.13	0.18	0.18	0.32	0.57	0.57	0.57
Queue Length 95th (ft)	11	0	0	0	0	0	0
Control Delay (s)	9.5	0.0	0.0	0.0	0.0	0.0	0.0
Lane LOS	A						
Approach Delay (s)	9.5	0.0			0.0		
Approach LOS	A						

Intersection Summary			
Average Delay	0.3		
Intersection Capacity Utilization	56.4%	ICU Level of Service	B
Analysis Period (min)	15		

Movement	EBL	EBT	EBR	WBL	WBT	WBR	NBL	NBT	NBR	SBL	SBT	SBR
Lane Configurations												
Volume (vph)	163	69	80	37	20	45	64	1833	50	96	3144	231
Ideal Flow (vphpl)	1900	1900	1900	1900	1900	1900	1900	1900	1900	1900	1900	1900
Total Lost time (s)	6.0	6.0		6.0	6.0		6.0	6.0		6.0	6.0	
Lane Util. Factor	1.00	1.00		1.00	1.00		1.00	0.91		1.00	0.91	
Frt	1.00	0.92		1.00	0.90		1.00	1.00		1.00	0.99	
Flt Protected	0.95	1.00		0.95	1.00		0.95	1.00		0.95	1.00	
Satd. Flow (prot)	1770	1713		1770	1670		1770	5065		1770	5033	
Flt Permitted	0.95	1.00		0.95	1.00		0.95	1.00		0.95	1.00	
Satd. Flow (perm)	1770	1713		1770	1670		1770	5065		1770	5033	
Peak-hour factor, PHF	0.95	0.95	0.95	0.95	0.95	0.95	0.95	0.95	0.95	0.95	0.95	0.95
Adj. Flow (vph)	172	73	84	39	21	47	67	1929	53	101	3309	243
RTOR Reduction (vph)	0	28	0	0	44	0	0	2	0	0	6	0
Lane Group Flow (vph)	172	129	0	39	24	0	67	1980	0	101	3546	0
Turn Type	Split			Split			Prot			Prot		
Protected Phases	4	4		8	8		5	2		1	6	
Permitted Phases												
Actuated Green, G (s)	15.9	15.9		9.6	9.6		10.0	87.3		13.2	90.5	
Effective Green, g (s)	15.9	15.9		9.6	9.6		10.0	87.3		13.2	90.5	
Actuated g/C Ratio	0.11	0.11		0.06	0.06		0.07	0.58		0.09	0.60	
Clearance Time (s)	6.0	6.0		6.0	6.0		6.0	6.0		6.0	6.0	
Vehicle Extension (s)	3.0	3.0		3.0	3.0		3.0	3.0		3.0	3.0	
Lane Grp Cap (vph)	188	182		113	107		118	2948		156	3037	
v/s Ratio Prot	c0.10	0.08		c0.02	0.01		0.04	0.39		c0.06	c0.70	
v/s Ratio Perm												
v/c Ratio	0.91	0.71		0.35	0.22		0.57	0.67		0.65	1.17	
Uniform Delay, d1	66.4	64.8		67.2	66.7		67.9	21.5		66.1	29.8	
Progression Factor	0.99	0.98		1.00	1.00		1.17	0.37		1.31	0.66	
Incremental Delay, d2	42.0	12.3		1.8	1.1		4.8	1.0		0.8	75.9	
Delay (s)	107.5	75.7		69.0	67.7		84.5	8.9		87.3	95.6	
Level of Service	F	E		E	E		F	A		F	F	
Approach Delay (s)		92.3			68.2			11.3			95.4	
Approach LOS		F			E			B			F	

Intersection Summary			
HCM Average Control Delay	66.7	HCM Level of Service	E
HCM Volume to Capacity ratio	1.05		
Actuated Cycle Length (s)	150.0	Sum of lost time (s)	24.0
Intersection Capacity Utilization	102.3%	ICU Level of Service	G
Analysis Period (min)	15		
c Critical Lane Group			

Movement	EBL	EBT	EBR	WBL	WBT	WBR	NBL	NBT	NBR	SBL	SBT	SBR
Lane Configurations												
Volume (veh/h)	172	21	10	6	63	10	8	144	6	10	205	79
Sign Control		Free			Free			Stop			Stop	
Grade		0%			0%			0%			0%	
Peak Hour Factor	0.95	0.95	0.95	0.95	0.95	0.95	0.95	0.95	0.95	0.95	0.95	0.95
Hourly flow rate (vph)	181	22	11	6	66	11	8	152	6	11	216	83
Pedestrians												
Lane Width (ft)												
Walking Speed (ft/s)												
Percent Blockage												
Right turn flare (veh)												
Median type		None			None							
Median storage veh)												
Upstream signal (ft)		1018										
pX, platoon unblocked												
vC, conflicting volume	77			33			659	479	27	551	479	72
vC1, stage 1 conf vol												
vC2, stage 2 conf vol												
vCu, unblocked vol	77			33			659	479	27	551	479	72
tC, single (s)	4.1			4.1			7.1	6.5	6.2	7.1	6.5	6.2
tC, 2 stage (s)												
tF (s)	2.2			2.2			3.5	4.0	3.3	3.5	4.0	3.3
p0 queue free %	88			100			96	64	99	96	49	92
cM capacity (veh/h)	1522			1579			190	426	1048	292	426	991

Direction, Lane #	EB 1	EB 2	WB 1	WB 2	NB 1	NB 2	SB 1
Volume Total	181	33	6	77	8	158	309
Volume Left	181	0	6	0	8	0	11
Volume Right	0	11	0	11	0	6	83
cSH	1522	1700	1579	1700	190	437	494
Volume to Capacity	0.12	0.02	0.00	0.05	0.04	0.36	0.63
Queue Length 95th (ft)	10	0	0	0	3	41	106
Control Delay (s)	7.7	0.0	7.3	0.0	24.8	17.8	23.7
Lane LOS	A		A		C	C	C
Approach Delay (s)	6.5		0.6		18.2		23.7
Approach LOS					C		C

Intersection Summary			
Average Delay	15.3		
Intersection Capacity Utilization	46.9%	ICU Level of Service	A
Analysis Period (min)	15		

Movement	EBL	EBT	EBR	WBL	WBT	WBR	NBL	NBT	NBR	SBL	SBT	SBR
Lane Configurations												
Volume (vph)	182	420	89	73	495	83	60	5	53	19	66	70
Ideal Flow (vphpl)	1900	1900	1900	1900	1900	1900	1900	1900	1900	1900	1900	1900
Total Lost time (s)	6.0	6.0	6.0	6.0	6.0			6.0	6.0	6.0	6.0	
Lane Util. Factor	1.00	0.95	1.00	1.00	0.95			1.00	1.00	1.00	1.00	
Frt	1.00	1.00	0.85	1.00	0.98			1.00	0.85	1.00	0.92	
Flt Protected	0.95	1.00	1.00	0.95	1.00			0.96	1.00	0.95	1.00	
Satd. Flow (prot)	1770	3539	1583	1770	3463			1780	1583	1770	1718	
Flt Permitted	0.42	1.00	1.00	0.37	1.00			0.69	1.00	0.71	1.00	
Satd. Flow (perm)	786	3539	1583	697	3463			1288	1583	1328	1718	
Peak-hour factor, PHF	0.95	0.95	0.95	0.95	0.95	0.95	0.95	0.95	0.95	0.95	0.95	0.95
Adj. Flow (vph)	192	442	94	77	521	87	63	5	56	20	69	74
RTOR Reduction (vph)	0	0	63	0	23	0	0	0	36	0	44	0
Lane Group Flow (vph)	192	442	31	77	585	0	0	68	20	20	99	0
Turn Type	Perm		Perm	pm+pt			Perm		Perm	Perm		
Protected Phases		4		3	8			2			6	
Permitted Phases	4		4	8			2		2	6		
Actuated Green, G (s)	24.5	24.5	24.5	36.1	36.1			26.9	26.9	26.9	26.9	
Effective Green, g (s)	24.5	24.5	24.5	36.1	36.1			26.9	26.9	26.9	26.9	
Actuated g/C Ratio	0.33	0.33	0.33	0.48	0.48			0.36	0.36	0.36	0.36	
Clearance Time (s)	6.0	6.0	6.0	6.0	6.0			6.0	6.0	6.0	6.0	
Vehicle Extension (s)	3.0	3.0	3.0	3.0	3.0			3.0	3.0	3.0	3.0	
Lane Grp Cap (vph)	257	1156	517	416	1667			462	568	476	616	
v/s Ratio Prot		0.12		0.01	c0.17						c0.06	
v/s Ratio Perm	c0.24		0.02	0.08				0.05	0.01	0.02		
v/c Ratio	0.75	0.38	0.06	0.19	0.35			0.15	0.04	0.04	0.16	
Uniform Delay, d1	22.5	19.4	17.3	11.0	12.1			16.3	15.6	15.7	16.4	
Progression Factor	1.32	0.97	2.26	1.47	1.64			1.19	1.56	1.02	1.03	
Incremental Delay, d2	1.1	0.0	0.0	0.2	0.1			0.7	0.1	0.2	0.6	
Delay (s)	30.7	18.9	39.1	16.3	20.1			20.1	24.6	16.1	17.4	
Level of Service	C	B	D	B	C			C	C	B	B	
Approach Delay (s)		24.6			19.6			22.1			17.3	
Approach LOS		C			B			C			B	

Intersection Summary			
HCM Average Control Delay	21.7	HCM Level of Service	C
HCM Volume to Capacity ratio	0.45		
Actuated Cycle Length (s)	75.0	Sum of lost time (s)	18.0
Intersection Capacity Utilization	57.8%	ICU Level of Service	B
Analysis Period (min)	15		
c Critical Lane Group			

Movement	EBL	EBT	EBR	WBL	WBT	WBR	NBL	NBT	NBR	SBL	SBT	SBR
Lane Configurations												
Volume (vph)	81	3	263	94	6	187	97	1699	180	289	2690	44
Ideal Flow (vphpl)	1900	1900	1900	1900	1900	1900	1900	1900	1900	1900	1900	1900
Total Lost time (s)		6.0		6.0	6.0	6.0	6.0	6.0	6.0	6.0	6.0	6.0
Lane Util. Factor		0.95		1.00	1.00	1.00	1.00	0.91	1.00	1.00	0.91	1.00
Frt		0.89		1.00	1.00	0.85	1.00	1.00	0.85	1.00	1.00	0.85
Flt Protected		0.99		0.95	1.00	1.00	0.95	1.00	1.00	0.95	1.00	1.00
Satd. Flow (prot)		3100		1770	1863	1583	1770	5085	1583	1770	5085	1583
Flt Permitted		0.88		0.17	1.00	1.00	0.05	1.00	1.00	0.06	1.00	1.00
Satd. Flow (perm)		2754		321	1863	1583	99	5085	1583	105	5085	1583
Peak-hour factor, PHF	0.95	0.95	0.95	0.95	0.95	0.95	0.95	0.95	0.95	0.95	0.95	0.95
Adj. Flow (vph)	85	3	277	99	6	197	102	1788	189	304	2832	46
RTOR Reduction (vph)	0	93	0	0	0	156	0	0	69	0	0	11
Lane Group Flow (vph)	0	272	0	99	6	41	102	1788	120	304	2832	35
Turn Type	Perm			pm+pt		Perm	pm+pt		Perm	pm+pt		Perm
Protected Phases		4		3	8		5	2		1	6	
Permitted Phases	4			8		8	2		2	6		6
Actuated Green, G (s)		17.2		31.3	31.3	31.3	83.1	75.3	75.3	106.7	92.9	92.9
Effective Green, g (s)		17.2		31.3	31.3	31.3	83.1	75.3	75.3	106.7	92.9	92.9
Actuated g/C Ratio		0.11		0.21	0.21	0.21	0.55	0.50	0.50	0.71	0.62	0.62
Clearance Time (s)		6.0		6.0	6.0	6.0	6.0	6.0	6.0	6.0	6.0	6.0
Vehicle Extension (s)		3.0		3.0	3.0	3.0	3.0	3.0	3.0	3.0	3.0	3.0
Lane Grp Cap (vph)		316		145	389	330	142	2553	795	357	3149	980
v/s Ratio Prot				c0.04	0.00		0.04	0.35		c0.14	c0.56	
v/s Ratio Perm		c0.10		0.11		0.03	0.36		0.08	0.46		0.02
v/c Ratio		1.00dr		0.68	0.02	0.12	0.72	0.70	0.15	0.85	0.90	0.04
Uniform Delay, d1		65.2		50.7	47.1	48.2	30.6	28.7	20.1	46.4	24.5	11.1
Progression Factor		0.58		0.96	0.95	0.88	1.14	0.51	0.33	1.62	1.25	0.07
Incremental Delay, d2		18.5		12.5	0.0	0.2	13.3	1.3	0.3	1.9	0.5	0.0
Delay (s)		56.5		61.1	44.7	42.6	48.3	16.0	7.0	77.3	31.0	0.7
Level of Service		E		E	D	D	D	B	A	E	C	A
Approach Delay (s)		56.5			48.7			16.7			35.0	
Approach LOS		E			D			B			C	

Intersection Summary			
HCM Average Control Delay	30.6	HCM Level of Service	C
HCM Volume to Capacity ratio	0.90		
Actuated Cycle Length (s)	150.0	Sum of lost time (s)	24.0
Intersection Capacity Utilization	93.5%	ICU Level of Service	F
Analysis Period (min)	15		

dr Defacto Right Lane. Recode with 1 though lane as a right lane.
c Critical Lane Group

Movement	NBL	NBT	NBR2	SBL	SBT	SBR2	NEL	NER2	SWL	SWR2
Lane Configurations										
Volume (vph)	767	148	239	270	233	69	10	207	559	183
Ideal Flow (vphpl)	1900	1900	1900	1900	1900	1900	1900	1900	1900	1900
Total Lost time (s)	6.0	6.0	6.0	6.0	6.0	6.0	6.0	6.0	6.0	6.0
Lane Util. Factor	0.97	0.95	1.00	0.97	0.95	1.00	0.97	1.00	0.97	1.00
Frt	1.00	1.00	0.85	1.00	1.00	0.85	1.00	0.85	1.00	0.85
Flt Protected	0.95	1.00	1.00	0.95	1.00	1.00	0.95	1.00	0.95	1.00
Satd. Flow (prot)	3433	3539	1583	3433	3539	1583	3433	1583	3433	1583
Flt Permitted	0.95	1.00	1.00	0.95	1.00	1.00	0.95	1.00	0.95	1.00
Satd. Flow (perm)	3433	3539	1583	3433	3539	1583	3433	1583	3433	1583
Peak-hour factor, PHF	0.95	0.95	0.95	0.95	0.95	0.95	0.95	0.95	0.95	0.95
Adj. Flow (vph)	807	156	252	284	245	73	11	218	588	193
RTOR Reduction (vph)	0	0	175	0	0	57	0	94	0	152
Lane Group Flow (vph)	807	156	77	284	245	16	11	124	588	41
Turn Type	Prot		Perm	Prot		Perm	Prot	custom	Prot	custom
Protected Phases	5	2		1	6		4		8	
Permitted Phases			2			6		2		6
Actuated Green, G (s)	23.0	23.0	23.0	16.0	16.0	16.0	18.0	23.0	18.0	16.0
Effective Green, g (s)	23.0	23.0	23.0	16.0	16.0	16.0	18.0	23.0	18.0	16.0
Actuated g/C Ratio	0.31	0.31	0.31	0.21	0.21	0.21	0.24	0.31	0.24	0.21
Clearance Time (s)	6.0	6.0	6.0	6.0	6.0	6.0	6.0	6.0	6.0	6.0
Vehicle Extension (s)	3.0	3.0	3.0	3.0	3.0	3.0	3.0	3.0	3.0	3.0
Lane Grp Cap (vph)	1053	1085	485	732	755	338	824	485	824	338
v/s Ratio Prot	c0.24	0.04		c0.08	0.07		0.00		c0.17	
v/s Ratio Perm			0.05			0.01		0.08		0.03
v/c Ratio	0.77	0.14	0.16	0.39	0.32	0.05	0.01	0.26	0.71	0.12
Uniform Delay, d1	23.6	18.9	19.0	25.3	24.9	23.4	21.7	19.6	26.1	23.8
Progression Factor	1.01	0.89	1.02	1.00	1.00	1.00	0.81	1.49	1.00	1.00
Incremental Delay, d2	5.3	0.3	0.7	1.6	1.1	0.3	0.0	1.1	5.2	0.7
Delay (s)	29.1	17.0	20.1	26.9	26.1	23.7	17.6	30.3	31.4	24.6
Level of Service	C	B	C	C	C	C	B	C	C	C
Approach Delay (s)		25.7			26.2					
Approach LOS		C			C					

Intersection Summary			
HCM Average Control Delay	27.2	HCM Level of Service	C
HCM Volume to Capacity ratio	0.64		
Actuated Cycle Length (s)	75.0	Sum of lost time (s)	18.0
Intersection Capacity Utilization	59.3%	ICU Level of Service	B
Analysis Period (min)	15		
c Critical Lane Group			

HCM Signalized Intersection Capacity Analysis
1: Rollins Ave & MD 355

4/3/2014

Movement	EBL	EBT	EBR	WBL	WBT	WBR	NBL	NBT	NBR	SBL	SBT	SBR
Lane Configurations												
Volume (vph)	0	409	59	0	338	201	106	3485	796	240	2459	48
Ideal Flow (vphpl)	1900	1900	1900	1900	1900	1900	1900	1900	1900	1900	1900	1900
Total Lost time (s)		6.0			6.0		6.0	6.0	6.0	6.0	6.0	
Lane Util. Factor		0.95			0.95		1.00	0.91	1.00	1.00	0.91	
Frt		0.98			0.94		1.00	1.00	0.85	1.00	1.00	
Flt Protected		1.00			1.00		0.95	1.00	1.00	0.95	1.00	
Satd. Flow (prot)		3472			3341		1770	5085	1583	1770	5071	
Flt Permitted		1.00			1.00		0.04	1.00	1.00	0.04	1.00	
Satd. Flow (perm)		3472			3341		76	5085	1583	73	5071	
Peak-hour factor, PHF	0.95	0.95	0.95	0.95	0.95	0.95	0.95	0.95	0.95	0.95	0.95	0.95
Adj. Flow (vph)	0	431	62	0	356	212	112	3668	838	253	2588	51
RTOR Reduction (vph)	0	8	0	0	58	0	0	0	11	0	1	0
Lane Group Flow (vph)	0	485	0	0	510	0	112	3668	827	253	2638	0
Turn Type							pm+pt		Perm	pm+pt		
Protected Phases		4			8		5	2		1	6	
Permitted Phases							2		2	6		
Actuated Green, G (s)		20.0			20.0		107.6	98.0	98.0	116.4	102.4	
Effective Green, g (s)		20.0			20.0		107.6	98.0	98.0	116.4	102.4	
Actuated g/C Ratio		0.13			0.13		0.72	0.65	0.65	0.78	0.68	
Clearance Time (s)		6.0			6.0		6.0	6.0	6.0	6.0	6.0	
Vehicle Extension (s)		3.0			3.0		3.0	3.0	3.0	3.0	3.0	
Lane Grp Cap (vph)		463			445		163	3322	1034	215	3462	
v/s Ratio Prot		0.14			c0.15		0.04	0.72		c0.11	c0.52	
v/s Ratio Perm							0.45		0.52	c0.81		
v/c Ratio		1.05			1.15		0.69	1.10	0.80	1.18	0.76	
Uniform Delay, d1		65.0			65.0		36.3	26.0	18.9	70.2	15.7	
Progression Factor		1.00			1.00		1.39	0.78	0.37	1.00	1.00	
Incremental Delay, d2		54.9			89.1		1.1	47.4	0.6	117.3	1.6	
Delay (s)		119.9			154.1		51.7	67.7	7.5	187.5	17.4	
Level of Service		F			F		D	E	A	F	B	
Approach Delay (s)		119.9			154.1			56.4			32.3	
Approach LOS		F			F			E			C	

Intersection Summary			
HCM Average Control Delay	58.4	HCM Level of Service	E
HCM Volume to Capacity ratio	1.20		
Actuated Cycle Length (s)	150.0	Sum of lost time (s)	18.0
Intersection Capacity Utilization	111.4%	ICU Level of Service	H
Analysis Period (min)	15		
c Critical Lane Group			

Movement	EBL	EBT	EBR	WBL	WBT	WBR	NBL	NBT	NBR	SBL	SBT	SBR
Lane Configurations												
Volume (vph)	40	60	40	858	25	111	40	4081	400	229	2232	10
Ideal Flow (vphpl)	1900	1900	1900	1900	1900	1900	1900	1900	1900	1900	1900	1900
Total Lost time (s)		6.0	6.0	6.0	6.0		6.0	6.0	6.0	6.0	6.0	
Lane Util. Factor		1.00	1.00	0.97	1.00		1.00	0.91	1.00	1.00	0.91	
Frt		1.00	0.85	1.00	0.88		1.00	1.00	0.85	1.00	1.00	
Flt Protected		0.98	1.00	0.95	1.00		0.95	1.00	1.00	0.95	1.00	
Satd. Flow (prot)		1826	1583	3433	1634		1770	5085	1583	1770	5082	
Flt Permitted		0.98	1.00	0.95	1.00		0.95	1.00	1.00	0.05	1.00	
Satd. Flow (perm)		1826	1583	3433	1634		1770	5085	1583	95	5082	
Peak-hour factor, PHF	0.95	0.95	0.95	0.95	0.95	0.95	0.95	0.95	0.95	0.95	0.95	0.95
Adj. Flow (vph)	42	63	42	903	26	117	42	4296	421	241	2349	11
RTOR Reduction (vph)	0	0	38	0	94	0	0	0	71	0	0	0
Lane Group Flow (vph)	0	105	4	903	49	0	42	4296	350	241	2360	0
Turn Type	Split		Perm	Split			Prot		Perm	pm+pt		
Protected Phases	4	4		8	8		5	2		1	6	
Permitted Phases			4						2	6		
Actuated Green, G (s)		13.3	13.3	29.7	29.7		4.8	76.0	76.0	85.2	78.2	
Effective Green, g (s)		13.3	13.3	29.7	29.7		4.8	76.0	76.0	85.2	78.2	
Actuated g/C Ratio		0.09	0.09	0.20	0.20		0.03	0.51	0.51	0.57	0.52	
Clearance Time (s)		6.0	6.0	6.0	6.0		6.0	6.0	6.0	6.0	6.0	
Vehicle Extension (s)		3.0	3.0	3.0	3.0		3.0	3.0	3.0	3.0	3.0	
Lane Grp Cap (vph)		162	140	680	324		57	2576	802	132	2649	
v/s Ratio Prot		c0.06		c0.26	0.03		0.02	0.84		c0.09	0.46	
v/s Ratio Perm			0.00						0.22	c0.95		
v/c Ratio		0.65	0.03	1.33	0.15		0.74	1.67	0.44	1.83	0.89	
Uniform Delay, d1		66.1	62.4	60.1	49.7		72.0	37.0	23.4	73.7	32.1	
Progression Factor		1.00	1.00	1.00	1.00		1.18	0.75	0.73	1.72	0.54	
Incremental Delay, d2		8.6	0.1	157.6	0.2		14.8	301.0	0.6	389.3	3.2	
Delay (s)		74.7	62.5	217.8	50.0		99.5	328.8	17.8	515.8	20.6	
Level of Service		E	E	F	D		F	F	B	F	C	
Approach Delay (s)		71.2			194.8			299.3			66.5	
Approach LOS		E			F			F			E	

Intersection Summary			
HCM Average Control Delay	211.8	HCM Level of Service	F
HCM Volume to Capacity ratio	1.54		
Actuated Cycle Length (s)	150.0	Sum of lost time (s)	18.0
Intersection Capacity Utilization	141.4%	ICU Level of Service	H
Analysis Period (min)	15		
c Critical Lane Group			

Movement	EBL	EBT	EBR	WBL	WBT	WBR	NBL	NBT	NBR	SBL	SBT	SBR
Lane Configurations												
Volume (vph)	55	20	50	175	5	90	20	4081	190	115	3093	10
Ideal Flow (vphpl)	1900	1900	1900	1900	1900	1900	1900	1900	1900	1900	1900	1900
Total Lost time (s)	6.0	6.0		6.0	6.0		6.0	6.0		6.0	6.0	
Lane Util. Factor	1.00	1.00		1.00	1.00		1.00	0.86		1.00	0.91	
Frt	1.00	0.89		1.00	0.86		1.00	0.99		1.00	1.00	
Flt Protected	0.95	1.00		0.95	1.00		0.95	1.00		0.95	1.00	
Satd. Flow (prot)	1770	1663		1770	1597		1770	6365		1770	5083	
Flt Permitted	0.64	1.00		0.71	1.00		0.95	1.00		0.95	1.00	
Satd. Flow (perm)	1183	1663		1320	1597		1770	6365		1770	5083	
Peak-hour factor, PHF	0.95	0.95	0.95	0.95	0.95	0.95	0.95	0.95	0.95	0.95	0.95	0.95
Adj. Flow (vph)	58	21	53	184	5	95	21	4296	200	121	3256	11
RTOR Reduction (vph)	0	37	0	0	36	0	0	4	0	0	0	0
Lane Group Flow (vph)	58	37	0	184	64	0	21	4492	0	121	3267	0
Turn Type	Perm			Perm			Prot			Prot		
Protected Phases		4			8		5	2		1	6	
Permitted Phases	4			8								
Actuated Green, G (s)	20.0	20.0		20.0	20.0		2.4	102.0		10.0	109.6	
Effective Green, g (s)	20.0	20.0		20.0	20.0		2.4	102.0		10.0	109.6	
Actuated g/C Ratio	0.13	0.13		0.13	0.13		0.02	0.68		0.07	0.73	
Clearance Time (s)	6.0	6.0		6.0	6.0		6.0	6.0		6.0	6.0	
Vehicle Extension (s)	3.0	3.0		3.0	3.0		3.0	3.0		3.0	3.0	
Lane Grp Cap (vph)	158	222		176	213		28	4328		118	3714	
v/s Ratio Prot		0.02			0.04		0.01	c0.71		c0.07	c0.64	
v/s Ratio Perm	0.05			c0.14								
v/c Ratio	0.37	0.17		1.05	0.30		0.75	1.04		1.03	0.88	
Uniform Delay, d1	59.2	57.6		65.0	58.7		73.5	24.0		70.0	15.2	
Progression Factor	1.00	1.00		1.00	1.00		1.06	0.28		0.99	0.78	
Incremental Delay, d2	1.4	0.4		80.3	0.8		38.1	21.0		51.6	1.0	
Delay (s)	60.7	58.0		145.3	59.5		115.8	27.7		120.8	12.9	
Level of Service	E	E		F	E		F	C		F	B	
Approach Delay (s)		59.2			115.1			28.1			16.8	
Approach LOS		E			F			C			B	

Intersection Summary			
HCM Average Control Delay	27.0	HCM Level of Service	C
HCM Volume to Capacity ratio	1.09		
Actuated Cycle Length (s)	150.0	Sum of lost time (s)	24.0
Intersection Capacity Utilization	100.0%	ICU Level of Service	G
Analysis Period (min)	15		
c Critical Lane Group			

Intersection Sign configuration not allowed in HCM analysis.

Movement	EBL	EBT	EBR	WBL	WBT	WBR	NBL	NBT	NBR	SBL	SBT	SBR
Lane Configurations												
Volume (vph)	372	1669	0	0	1141	192	441	0	452	0	0	0
Ideal Flow (vphpl)	1900	1900	1900	1900	1900	1900	1900	1900	1900	1900	1900	1900
Lane Width	11	11	11	11	11	11	11	11	11	11	11	11
Total Lost time (s)	6.0	6.0			6.0	6.0		6.0	6.0			
Lane Util. Factor	0.97	0.95			0.95	1.00		1.00	0.88			
Frt	1.00	1.00			1.00	0.85		1.00	0.85			
Flt Protected	0.95	1.00			1.00	1.00		0.95	1.00			
Satd. Flow (prot)	3319	3421			3421	1531		1711	2694			
Flt Permitted	0.95	1.00			1.00	1.00		0.95	1.00			
Satd. Flow (perm)	3319	3421			3421	1531		1711	2694			
Peak-hour factor, PHF	0.95	0.95	0.95	0.95	0.95	0.95	0.95	0.95	0.95	0.95	0.95	0.95
Adj. Flow (vph)	392	1757	0	0	1201	202	464	0	476	0	0	0
RTOR Reduction (vph)	0	0	0	0	0	81	0	0	24	0	0	0
Lane Group Flow (vph)	392	1757	0	0	1201	121	0	464	452	0	0	0
Turn Type	Prot					Perm	Perm		Perm			
Protected Phases	1	6			2			4				
Permitted Phases						2	4		4			
Actuated Green, G (s)	21.0	93.0			66.0	66.0		45.0	45.0			
Effective Green, g (s)	21.0	93.0			66.0	66.0		45.0	45.0			
Actuated g/C Ratio	0.14	0.62			0.44	0.44		0.30	0.30			
Clearance Time (s)	6.0	6.0			6.0	6.0		6.0	6.0			
Vehicle Extension (s)	3.0	3.0			3.0	3.0		3.0	3.0			
Lane Grp Cap (vph)	465	2121			1505	674		513	808			
v/s Ratio Prot	0.12	c0.51			0.35							
v/s Ratio Perm						0.08		0.27	0.17			
v/c Ratio	0.84	0.83			0.80	0.18		0.90	0.56			
Uniform Delay, d1	62.9	22.3			36.2	25.5		50.4	44.2			
Progression Factor	0.75	0.64			0.50	0.17		0.94	0.90			
Incremental Delay, d2	1.4	0.4			3.4	0.4		2.4	0.1			
Delay (s)	48.7	14.6			21.4	4.7		49.8	39.8			
Level of Service	D	B			C	A		D	D			
Approach Delay (s)		20.9			19.0			44.7			0.0	
Approach LOS		C			B			D			A	

Intersection Summary			
HCM Average Control Delay	25.3	HCM Level of Service	C
HCM Volume to Capacity ratio	0.85		
Actuated Cycle Length (s)	150.0	Sum of lost time (s)	12.0
Intersection Capacity Utilization	81.6%	ICU Level of Service	D
Analysis Period (min)	15		

c Critical Lane Group

Movement	EBL	EBT	EBR	WBL	WBT	WBR	NBL	NBT	NBR	SBL	SBT	SBR
Lane Configurations												
Volume (vph)	173	416	104	91	580	420	167	3853	40	214	2579	34
Ideal Flow (vphpl)	1900	1900	1900	1900	1900	1900	1900	1900	1900	1900	1900	1900
Total Lost time (s)	6.0	6.0	6.0	6.0	6.0	6.0	6.0	6.0		6.0	6.0	6.0
Lane Util. Factor	*1.00	*1.00	1.00	1.00	1.00	1.00	1.00	0.91		1.00	0.91	1.00
Frt	1.00	1.00	0.85	1.00	1.00	0.85	1.00	1.00		1.00	1.00	0.85
Flt Protected	0.95	1.00	1.00	0.95	1.00	1.00	0.95	1.00		0.95	1.00	1.00
Satd. Flow (prot)	3539	1859	1583	1770	1863	1583	1770	5077		1770	5085	1583
Flt Permitted	0.95	1.00	1.00	0.95	1.00	1.00	0.07	1.00		0.06	1.00	1.00
Satd. Flow (perm)	3539	1859	1583	1770	1863	1583	124	5077		120	5085	1583
Peak-hour factor, PHF	0.95	0.95	0.95	0.95	0.95	0.95	0.95	0.95	0.95	0.95	0.95	0.95
Adj. Flow (vph)	182	438	109	96	611	442	176	4056	42	225	2715	36
RTOR Reduction (vph)	0	0	63	0	0	120	0	1	0	0	0	9
Lane Group Flow (vph)	164	456	46	96	611	322	176	4097	0	225	2715	27
Turn Type	Split		Perm	Split		Perm	pm+pt			pm+pt		Perm
Protected Phases	4	4		8	8		5	2		1	6	
Permitted Phases			4			8	2			6		6
Actuated Green, G (s)	28.0	28.0	28.0	31.0	31.0	31.0	65.0	60.0		69.0	62.0	62.0
Effective Green, g (s)	28.0	28.0	28.0	31.0	31.0	31.0	65.0	60.0		69.0	62.0	62.0
Actuated g/C Ratio	0.19	0.19	0.19	0.21	0.21	0.21	0.43	0.40		0.46	0.41	0.41
Clearance Time (s)	6.0	6.0	6.0	6.0	6.0	6.0	6.0	6.0		6.0	6.0	6.0
Vehicle Extension (s)	3.0	3.0	3.0	3.0	3.0	3.0	3.0	3.0		3.0	3.0	3.0
Lane Grp Cap (vph)	661	347	295	366	385	327	109	2031		132	2102	654
v/s Ratio Prot	0.05	c0.25		0.05	c0.33		0.05	c0.81		c0.08	0.53	
v/s Ratio Perm			0.03			0.20	0.65			0.70		0.02
v/c Ratio	0.25	1.31	0.15	0.26	1.59	0.99	1.61	2.02		1.70	1.29	0.04
Uniform Delay, d1	52.0	61.0	51.1	49.9	59.5	59.3	74.7	45.0		73.7	44.0	26.3
Progression Factor	1.21	1.21	2.30	0.99	1.00	1.00	1.65	0.85		2.14	0.45	0.46
Incremental Delay, d2	0.2	159.2	0.2	0.4	276.1	45.0	280.5	458.0		330.0	132.8	0.0
Delay (s)	63.1	233.2	117.8	49.8	335.8	104.5	403.9	496.4		487.5	152.6	12.2
Level of Service	E	F	F	D	F	F	F	F		F	F	B
Approach Delay (s)		177.7			222.9			492.6			176.3	
Approach LOS		F			F			F			F	

Intersection Summary			
HCM Average Control Delay	330.3	HCM Level of Service	F
HCM Volume to Capacity ratio	1.74		
Actuated Cycle Length (s)	150.0	Sum of lost time (s)	24.0
Intersection Capacity Utilization	159.6%	ICU Level of Service	H
Analysis Period (min)	15		
c Critical Lane Group			

Movement	EBL	EBT	EBR	WBL	WBT	WBR	NBL	NBT	NBR	SBL	SBT	SBR
Lane Configurations												
Volume (vph)	144	130	175	72	28	120	44	3445	87	56	2662	33
Ideal Flow (vphpl)	1900	1900	1900	1900	1900	1900	1900	1900	1900	1900	1900	1900
Total Lost time (s)	6.0	6.0		6.0	6.0	6.0	6.0	6.0	6.0	6.0	6.0	6.0
Lane Util. Factor	1.00	0.95		1.00	0.95	1.00	1.00	0.91	1.00	1.00	0.91	1.00
Frt	1.00	0.91		1.00	1.00	0.85	1.00	1.00	0.85	1.00	1.00	0.85
Flt Protected	0.95	1.00		0.95	1.00	1.00	0.95	1.00	1.00	0.95	1.00	1.00
Satd. Flow (prot)	1770	3235		1770	3539	1583	1770	5085	1583	1770	5085	1583
Flt Permitted	0.74	1.00		0.28	1.00	1.00	0.04	1.00	1.00	0.04	1.00	1.00
Satd. Flow (perm)	1373	3235		528	3539	1583	76	5085	1583	75	5085	1583
Peak-hour factor, PHF	0.95	0.95	0.95	0.95	0.95	0.95	0.95	0.95	0.95	0.95	0.95	0.95
Adj. Flow (vph)	152	137	184	76	29	126	46	3626	92	59	2802	35
RTOR Reduction (vph)	0	103	0	0	0	101	0	0	32	0	0	9
Lane Group Flow (vph)	152	218	0	76	29	25	46	3626	60	59	2802	26
Turn Type	pm+pt			pm+pt		Perm	pm+pt		Perm	pm+pt		Perm
Protected Phases	7	4		3	8		5	2		1	6	
Permitted Phases	4			8		8	2		2	6		6
Actuated Green, G (s)	21.1	14.1		21.1	14.1	14.1	104.1	98.5	98.5	105.7	99.3	99.3
Effective Green, g (s)	21.1	14.1		21.1	14.1	14.1	104.1	98.5	98.5	105.7	99.3	99.3
Actuated g/C Ratio	0.14	0.09		0.14	0.09	0.09	0.69	0.66	0.66	0.70	0.66	0.66
Clearance Time (s)	6.0	6.0		6.0	6.0	6.0	6.0	6.0	6.0	6.0	6.0	6.0
Vehicle Extension (s)	3.0	3.0		3.0	3.0	3.0	3.0	3.0	3.0	3.0	3.0	3.0
Lane Grp Cap (vph)	212	304		132	333	149	116	3339	1040	125	3366	1048
v/s Ratio Prot	c0.03	0.07		0.03	0.01		0.01	c0.71		c0.02	0.55	
v/s Ratio Perm	c0.07			0.05		0.02	0.26		0.04	0.31		0.02
v/c Ratio	0.72	0.72		0.58	0.09	0.16	0.40	1.09	0.06	0.47	0.83	0.02
Uniform Delay, d1	60.9	66.0		58.1	62.1	62.5	23.1	25.8	9.2	39.6	19.1	8.7
Progression Factor	0.93	0.91		1.02	1.02	1.06	2.27	1.52	0.11	1.73	0.48	0.70
Incremental Delay, d2	11.0	7.8		5.9	0.1	0.5	0.2	39.3	0.0	1.5	1.4	0.0
Delay (s)	67.8	67.9		65.2	63.6	67.0	52.6	78.4	1.1	70.0	10.6	6.2
Level of Service	E	E		E	E	E	D	E	A	E	B	A
Approach Delay (s)		67.9			66.0			76.2			11.7	
Approach LOS		E			E			E			B	

Intersection Summary			
HCM Average Control Delay	50.0	HCM Level of Service	D
HCM Volume to Capacity ratio	0.99		
Actuated Cycle Length (s)	150.0	Sum of lost time (s)	24.0
Intersection Capacity Utilization	97.0%	ICU Level of Service	F
Analysis Period (min)	15		
c Critical Lane Group			

Movement	EBL	EBT	EBR	WBL	WBT	WBR	NBL	NBT	NBR	SBL	SBT	SBR
Lane Configurations												
Volume (vph)	368	803	25	198	788	219	52	2888	113	168	2548	65
Ideal Flow (vphpl)	1900	1900	1900	1900	1900	1900	1900	1900	1900	1900	1900	1900
Total Lost time (s)		6.0	6.0	6.0	6.0	6.0	6.0	6.0	6.0	6.0	6.0	6.0
Lane Util. Factor		0.95	1.00	0.97	0.95	1.00	1.00	0.91	1.00	1.00	0.91	1.00
Frt		1.00	0.85	1.00	1.00	0.85	1.00	1.00	0.85	1.00	1.00	0.85
Flt Protected		0.98	1.00	0.95	1.00	1.00	0.95	1.00	1.00	0.95	1.00	1.00
Satd. Flow (prot)		3484	1583	3433	3539	1583	1770	5085	1583	1770	5085	1583
Flt Permitted		0.59	1.00	0.06	1.00	1.00	0.95	1.00	1.00	0.08	1.00	1.00
Satd. Flow (perm)		2075	1583	223	3539	1583	1770	5085	1583	145	5085	1583
Peak-hour factor, PHF	0.95	0.95	0.95	0.95	0.95	0.95	0.95	0.95	0.95	0.95	0.95	0.95
Adj. Flow (vph)	387	845	26	208	829	231	55	3040	119	177	2682	68
RTOR Reduction (vph)	0	0	7	0	0	67	0	0	28	0	0	18
Lane Group Flow (vph)	0	1232	19	208	829	164	55	3040	91	177	2682	50
Turn Type	Perm		Perm	pm+pt		Perm	Prot		Perm	pm+pt		Perm
Protected Phases		4		3	8		5	2		1	6	
Permitted Phases	4		4	8		8			2	6		6
Actuated Green, G (s)		58.7	58.7	75.0	75.0	75.0	5.6	50.0	50.0	58.4	51.4	51.4
Effective Green, g (s)		58.7	58.7	75.0	75.0	75.0	5.6	50.0	50.0	58.4	51.4	51.4
Actuated g/C Ratio		0.39	0.39	0.50	0.50	0.50	0.04	0.33	0.33	0.39	0.34	0.34
Clearance Time (s)		6.0	6.0	6.0	6.0	6.0	6.0	6.0	6.0	6.0	6.0	6.0
Vehicle Extension (s)		3.0	3.0	3.0	3.0	3.0	3.0	3.0	3.0	3.0	3.0	3.0
Lane Grp Cap (vph)		812	619	332	1770	792	66	1695	528	132	1742	542
v/s Ratio Prot				c0.04	0.23		0.03	c0.60		c0.06	0.53	
v/s Ratio Perm		c0.59	0.01	0.27		0.10			0.06	0.46		0.03
v/c Ratio		1.61dl	0.03	0.63	0.47	0.21	0.83	1.79	0.17	1.34	1.54	0.09
Uniform Delay, d1		45.6	28.1	30.9	24.5	20.9	71.7	50.0	35.4	73.7	49.3	33.5
Progression Factor		0.49	0.60	1.09	0.81	0.62	1.28	0.86	0.95	1.43	0.81	0.72
Incremental Delay, d2		237.2	0.0	3.6	0.2	0.1	19.1	357.7	0.2	180.3	244.6	0.2
Delay (s)		259.3	16.9	37.2	19.9	13.1	110.9	400.7	33.6	285.5	284.6	24.4
Level of Service		F	B	D	B	B	F	F	C	F	F	C
Approach Delay (s)		254.3			21.5			382.1			278.6	
Approach LOS		F			C			F			F	

Intersection Summary			
HCM Average Control Delay	275.9	HCM Level of Service	F
HCM Volume to Capacity ratio	1.55		
Actuated Cycle Length (s)	150.0	Sum of lost time (s)	24.0
Intersection Capacity Utilization	139.8%	ICU Level of Service	H
Analysis Period (min)	15		

dl Defacto Left Lane. Recode with 1 though lane as a left lane.
c Critical Lane Group

Movement	EBL	EBT	EBR	WBL	WBT	WBR	NBL	NBT	NBR	SBL	SBT	SBR
Lane Configurations												
Volume (vph)	189	0	96	304	0	203	94	2343	248	166	2660	57
Ideal Flow (vphpl)	1900	1900	1900	1900	1900	1900	1900	1900	1900	1900	1900	1900
Total Lost time (s)	6.0	6.0		6.0	6.0		6.0	6.0		6.0	6.0	6.0
Lane Util. Factor	1.00	1.00		1.00	1.00		1.00	0.86		1.00	0.91	1.00
Frt	1.00	0.85		1.00	0.85		1.00	0.99		1.00	1.00	0.85
Flt Protected	0.95	1.00		0.95	1.00		0.95	1.00		0.95	1.00	1.00
Satd. Flow (prot)	1770	1583		1770	1583		1770	6316		1770	5085	1583
Flt Permitted	0.38	1.00		0.59	1.00		0.05	1.00		0.95	1.00	1.00
Satd. Flow (perm)	710	1583		1090	1583		91	6316		1770	5085	1583
Peak-hour factor, PHF	0.95	0.95	0.95	0.95	0.95	0.95	0.95	0.95	0.95	0.95	0.95	0.95
Adj. Flow (vph)	199	0	101	320	0	214	99	2466	261	175	2800	60
RTOR Reduction (vph)	0	86	0	0	164	0	0	10	0	0	0	14
Lane Group Flow (vph)	199	15	0	320	50	0	99	2717	0	175	2800	46
Turn Type	pm+pt			pm+pt			pm+pt			Prot		Perm
Protected Phases	7	4		3	8		5	2		1	6	
Permitted Phases	4			8			2					6
Actuated Green, G (s)	25.3	10.5		23.7	9.7		91.1	81.5		20.0	91.9	91.9
Effective Green, g (s)	25.3	10.5		23.7	9.7		91.1	81.5		20.0	91.9	91.9
Actuated g/C Ratio	0.17	0.07		0.16	0.06		0.61	0.54		0.13	0.61	0.61
Clearance Time (s)	6.0	6.0		6.0	6.0		6.0	6.0		6.0	6.0	6.0
Vehicle Extension (s)	3.0	3.0		3.0	3.0		3.0	3.0		3.0	3.0	3.0
Lane Grp Cap (vph)	224	111		236	102		163	3432		236	3115	970
v/s Ratio Prot	0.09	0.01		c0.13	0.03		0.04	0.43		c0.10	c0.55	
v/s Ratio Perm	0.06			c0.09			0.33					0.03
v/c Ratio	0.89	0.13		1.36	0.49		0.61	0.79		0.74	0.90	0.05
Uniform Delay, d1	68.7	65.5		62.1	67.8		31.7	27.4		62.5	25.0	11.6
Progression Factor	1.00	1.00		1.00	1.00		1.28	0.43		1.21	0.45	0.41
Incremental Delay, d2	31.7	0.5		185.3	3.7		1.5	0.5		7.7	3.0	0.1
Delay (s)	100.3	66.0		247.4	71.5		42.3	12.2		83.5	14.4	4.9
Level of Service	F	E		F	E		D	B		F	B	A
Approach Delay (s)		88.8			176.9			13.2			18.2	
Approach LOS		F			F			B			B	

Intersection Summary			
HCM Average Control Delay	31.9	HCM Level of Service	C
HCM Volume to Capacity ratio	0.99		
Actuated Cycle Length (s)	150.0	Sum of lost time (s)	24.0
Intersection Capacity Utilization	99.6%	ICU Level of Service	F
Analysis Period (min)	15		
c Critical Lane Group			

Movement	EBL	EBT	EBR	WBL	WBT	WBR	NBL	NBT	NBR	SBL	SBT	SBR
Lane Configurations												
Volume (vph)	521	242	89	285	272	39	60	2230	240	30	2628	182
Ideal Flow (vphpl)	1900	1900	1900	1900	1900	1900	1900	1900	1900	1900	1900	1900
Total Lost time (s)		6.0	6.0	6.0	6.0	6.0	6.0	6.0	6.0	6.0	6.0	
Lane Util. Factor		0.95	1.00	0.95	0.95	1.00	1.00	0.91	1.00	1.00	0.91	
Frt		1.00	0.85	1.00	1.00	0.85	1.00	1.00	0.85	1.00	0.99	
Flt Protected		0.97	1.00	0.95	1.00	1.00	0.95	1.00	1.00	0.95	1.00	
Satd. Flow (prot)		3422	1583	1681	1761	1583	1770	5085	1583	1770	5036	
Flt Permitted		0.97	1.00	0.95	1.00	1.00	0.06	1.00	1.00	0.06	1.00	
Satd. Flow (perm)		3422	1583	1681	1761	1583	105	5085	1583	109	5036	
Peak-hour factor, PHF	0.95	0.95	0.95	0.95	0.95	0.95	0.95	0.95	0.95	0.95	0.95	0.95
Adj. Flow (vph)	548	255	94	300	286	41	63	2347	253	32	2766	192
RTOR Reduction (vph)	0	0	0	0	0	34	0	0	116	0	5	0
Lane Group Flow (vph)	0	803	94	270	316	7	63	2347	137	32	2953	0
Turn Type	Split		pm+ov	Split		Perm	pm+pt		Perm	pm+pt		
Protected Phases	4	4	5	8	8		5	2		1	6	
Permitted Phases			4			8	2		2	6		
Actuated Green, G (s)		28.0	34.8	23.0	23.0	23.0	77.7	70.9	70.9	72.3	68.2	
Effective Green, g (s)		28.0	34.8	23.0	23.0	23.0	77.7	70.9	70.9	72.3	68.2	
Actuated g/C Ratio		0.19	0.23	0.15	0.15	0.15	0.52	0.47	0.47	0.48	0.45	
Clearance Time (s)		6.0	6.0	6.0	6.0	6.0	6.0	6.0	6.0	6.0	6.0	
Vehicle Extension (s)		3.0	3.0	3.0	3.0	3.0	3.0	3.0	3.0	3.0	3.0	
Lane Grp Cap (vph)		639	367	258	270	243	130	2404	748	98	2290	
v/s Ratio Prot		c0.23	0.01	0.16	c0.18		c0.02	c0.46		0.01	c0.59	
v/s Ratio Perm			0.05			0.00	0.23		0.09	0.15		
v/c Ratio		1.66dl	0.26	1.05	1.17	0.03	0.48	0.98	0.18	0.33	1.29	
Uniform Delay, d1		61.0	47.0	63.5	63.5	54.0	34.8	38.7	22.8	34.3	40.9	
Progression Factor		1.17	0.86	1.00	1.00	1.00	1.82	1.01	2.37	0.94	0.75	
Incremental Delay, d2		116.7	0.0	68.7	108.9	0.0	1.3	8.0	0.2	0.8	131.8	
Delay (s)		188.1	40.3	132.2	172.4	54.1	64.8	47.0	54.3	33.2	162.4	
Level of Service		F	D	F	F	D	E	D	D	C	F	
Approach Delay (s)		172.6			147.4			48.1			161.0	
Approach LOS		F			F			D			F	

Intersection Summary			
HCM Average Control Delay	119.4	HCM Level of Service	F
HCM Volume to Capacity ratio	1.28		
Actuated Cycle Length (s)	150.0	Sum of lost time (s)	30.0
Intersection Capacity Utilization	113.7%	ICU Level of Service	H
Analysis Period (min)	15		

dl Defacto Left Lane. Recode with 1 though lane as a left lane.
c Critical Lane Group

Movement	EBL	EBT	EBR	WBL	WBT	WBR	NBL	NBT	NBR	SBL	SBT	SBR
Lane Configurations												
Volume (vph)	34	27	55	301	14	114	30	2414	603	181	2921	36
Ideal Flow (vphpl)	1900	1900	1900	1900	1900	1900	1900	1900	1900	1900	1900	1900
Total Lost time (s)		6.0	6.0	6.0	6.0	6.0	6.0	6.0	6.0	6.0	6.0	
Lane Util. Factor		1.00	1.00	0.95	0.95	1.00	1.00	0.91	1.00	1.00	0.91	
Frt		1.00	0.85	1.00	1.00	0.85	1.00	1.00	0.85	1.00	1.00	
Flt Protected		0.97	1.00	0.95	0.96	1.00	0.95	1.00	1.00	0.95	1.00	
Satd. Flow (prot)		1812	1583	1681	1693	1583	1770	5085	1583	1770	5076	
Flt Permitted		0.97	1.00	0.95	0.96	1.00	0.05	1.00	1.00	0.05	1.00	
Satd. Flow (perm)		1812	1583	1681	1693	1583	90	5085	1583	84	5076	
Peak-hour factor, PHF	0.95	0.95	0.95	0.95	0.95	0.95	0.95	0.95	0.95	0.95	0.95	0.95
Adj. Flow (vph)	36	28	58	317	15	120	32	2541	635	191	3075	38
RTOR Reduction (vph)	0	0	54	0	0	85	0	0	284	0	1	0
Lane Group Flow (vph)	0	64	4	165	167	35	32	2541	351	191	3112	0
Turn Type	Split		Perm	Split		Perm	pm+pt		Perm	pm+pt		
Protected Phases	4	4		8	8		5	2		1	6	
Permitted Phases			4			8	2		2	6		
Actuated Green, G (s)		11.6	11.6	18.0	18.0	18.0	86.8	82.8	82.8	102.4	92.4	
Effective Green, g (s)		11.6	11.6	18.0	18.0	18.0	86.8	82.8	82.8	102.4	92.4	
Actuated g/C Ratio		0.08	0.08	0.12	0.12	0.12	0.58	0.55	0.55	0.68	0.62	
Clearance Time (s)		6.0	6.0	6.0	6.0	6.0	6.0	6.0	6.0	6.0	6.0	
Vehicle Extension (s)		3.0	3.0	3.0	3.0	3.0	3.0	3.0	3.0	3.0	3.0	
Lane Grp Cap (vph)		140	122	202	203	190	97	2807	874	210	3127	
v/s Ratio Prot		c0.04		0.10	c0.10		0.01	0.50		c0.08	c0.61	
v/s Ratio Perm			0.00			0.02	0.18		0.22	0.54		
v/c Ratio		0.46	0.04	0.82	0.82	0.18	0.33	0.91	0.40	0.91	1.00	
Uniform Delay, d1		66.2	64.0	64.4	64.4	59.4	72.4	30.1	19.3	51.3	28.6	
Progression Factor		1.00	1.00	1.00	1.00	1.00	1.12	0.17	0.00	1.19	0.94	
Incremental Delay, d2		2.4	0.1	21.9	22.8	0.5	0.8	2.4	0.6	5.7	3.9	
Delay (s)		68.5	64.2	86.3	87.2	59.8	82.0	7.5	0.6	66.6	30.9	
Level of Service		E	E	F	F	E	F	A	A	E	C	
Approach Delay (s)		66.5			79.6			6.9			32.9	
Approach LOS		E			E			A			C	

Intersection Summary			
HCM Average Control Delay	24.7	HCM Level of Service	C
HCM Volume to Capacity ratio	0.94		
Actuated Cycle Length (s)	150.0	Sum of lost time (s)	24.0
Intersection Capacity Utilization	90.9%	ICU Level of Service	E
Analysis Period (min)	15		
c Critical Lane Group			

Movement	EBL	EBT	EBR	WBL	WBT	WBR	NBL	NBT	NBR	SBL	SBT	SBR
Lane Configurations												
Volume (vph)	59	211	605	43	327	310	210	2355	30	189	2858	64
Ideal Flow (vphpl)	1900	1900	1900	1900	1900	1900	1900	1900	1900	1900	1900	1900
Total Lost time (s)	6.0	6.0	6.0	6.0	6.0	6.0	6.0	6.0		6.0	6.0	6.0
Lane Util. Factor	0.91	0.91	1.00	0.91	0.91	1.00	1.00	0.91		1.00	0.91	1.00
Frt	1.00	1.00	0.85	1.00	1.00	0.85	1.00	1.00		1.00	1.00	0.85
Flt Protected	0.95	1.00	1.00	0.95	1.00	1.00	0.95	1.00		0.95	1.00	1.00
Satd. Flow (prot)	1610	3386	1583	1610	3388	1583	1770	5076		1770	5085	1583
Flt Permitted	0.95	1.00	1.00	0.95	1.00	1.00	0.95	1.00		0.06	1.00	1.00
Satd. Flow (perm)	1610	3386	1583	1610	3388	1583	1770	5076		110	5085	1583
Peak-hour factor, PHF	0.95	0.95	0.95	0.95	0.95	0.95	0.95	0.95	0.95	0.95	0.95	0.95
Adj. Flow (vph)	62	222	637	45	344	326	221	2479	32	199	3008	67
RTOR Reduction (vph)	0	0	198	0	0	274	0	1	0	0	0	28
Lane Group Flow (vph)	56	228	439	40	349	52	221	2510	0	199	3008	39
Turn Type	Split		Perm	Split		Perm	Prot			pm+pt		Perm
Protected Phases	4	4		8	8		5	2		1	6	
Permitted Phases			4			8				6		6
Actuated Green, G (s)	28.0	28.0	28.0	16.0	16.0	16.0	14.0	70.0		80.0	68.0	68.0
Effective Green, g (s)	28.0	28.0	28.0	16.0	16.0	16.0	14.0	70.0		80.0	68.0	68.0
Actuated g/C Ratio	0.19	0.19	0.19	0.11	0.11	0.11	0.09	0.47		0.53	0.45	0.45
Clearance Time (s)	6.0	6.0	6.0	6.0	6.0	6.0	6.0	6.0		6.0	6.0	6.0
Vehicle Extension (s)	3.0	3.0	3.0	3.0	3.0	3.0	3.0	3.0		3.0	3.0	3.0
Lane Grp Cap (vph)	301	632	295	172	361	169	165	2369		191	2305	718
v/s Ratio Prot	0.03	0.07		0.02	c0.10		c0.12	0.49		0.08	c0.59	
v/s Ratio Perm			c0.28			0.03				0.47		0.02
v/c Ratio	0.19	0.36	1.49	0.23	0.97	0.31	1.34	1.06		1.04	1.30	0.05
Uniform Delay, d1	51.4	53.2	61.0	61.4	66.7	61.9	68.0	40.0		71.2	41.0	23.0
Progression Factor	0.88	0.86	0.73	1.00	1.00	1.00	1.00	1.00		1.09	1.13	1.69
Incremental Delay, d2	0.3	0.3	236.5	0.7	38.2	1.0	187.7	36.7		48.9	138.3	0.0
Delay (s)	45.3	46.3	281.3	62.1	104.9	62.9	255.7	76.7		126.7	184.8	39.0
Level of Service	D	D	F	E	F	E	F	E		F	F	D
Approach Delay (s)		208.7			83.4			91.1			178.3	
Approach LOS		F			F			F			F	

Intersection Summary			
HCM Average Control Delay	141.9	HCM Level of Service	F
HCM Volume to Capacity ratio	1.31		
Actuated Cycle Length (s)	150.0	Sum of lost time (s)	24.0
Intersection Capacity Utilization	116.7%	ICU Level of Service	H
Analysis Period (min)	15		
c Critical Lane Group			

Movement	EBL	EBT	WBT	WBR	SBL	SBR
Lane Configurations						
Volume (vph)	1189	2305	3163	25	0	671
Ideal Flow (vphpl)	1900	1900	1900	1900	1900	1900
Total Lost time (s)	6.0	4.0	6.0	6.0		4.0
Lane Util. Factor	0.94	0.95	0.95	1.00		1.00
Frt	1.00	1.00	1.00	0.85		0.86
Flt Protected	0.95	1.00	1.00	1.00		1.00
Satd. Flow (prot)	4990	3539	3539	1583		1611
Flt Permitted	0.95	1.00	1.00	1.00		1.00
Satd. Flow (perm)	4990	3539	3539	1583		1611
Peak-hour factor, PHF	0.95	0.95	0.95	0.95	0.95	0.95
Adj. Flow (vph)	1252	2426	3329	26	0	706
RTOR Reduction (vph)	0	0	0	0	0	0
Lane Group Flow (vph)	1252	2426	3329	26	0	706
Turn Type	Prot			Perm		Free
Protected Phases	1	Free	2			
Permitted Phases				2		Free
Actuated Green, G (s)	30.0	150.0	108.0	108.0		150.0
Effective Green, g (s)	30.0	150.0	108.0	108.0		150.0
Actuated g/C Ratio	0.20	1.00	0.72	0.72		1.00
Clearance Time (s)	6.0		6.0	6.0		
Vehicle Extension (s)	3.0		3.0	3.0		
Lane Grp Cap (vph)	998	3539	2548	1140		1611
v/s Ratio Prot	c0.25	0.69	c0.94			
v/s Ratio Perm				0.02		0.44
v/c Ratio	1.25	0.69	1.31	0.02		0.44
Uniform Delay, d1	60.0	0.0	21.0	6.0		0.0
Progression Factor	1.00	1.00	0.24	0.21		1.00
Incremental Delay, d2	122.8	1.1	138.2	0.0		0.8
Delay (s)	182.8	1.1	143.2	1.2		0.8
Level of Service	F	A	F	A		A
Approach Delay (s)		63.0	142.1		0.8	
Approach LOS		E	F		A	

Intersection Summary			
HCM Average Control Delay	91.6	HCM Level of Service	F
HCM Volume to Capacity ratio	1.30		
Actuated Cycle Length (s)	150.0	Sum of lost time (s)	12.0
Intersection Capacity Utilization	120.0%	ICU Level of Service	H
Analysis Period (min)	15		
c Critical Lane Group			

Movement	EBL	EBT	EBR	WBL	WBT	WBR	NBL	NBT	NBR	SBL	SBT	SBR
Lane Configurations												
Volume (vph)	485	389	60	113	175	50	190	625	35	44	394	438
Ideal Flow (vphpl)	1900	1900	1900	1900	1900	1900	1900	1900	1900	1900	1900	1900
Total Lost time (s)	6.0	6.0	4.0	6.0	6.0		6.0	6.0		6.0	6.0	6.0
Lane Util. Factor	0.97	0.95	1.00	1.00	0.95		1.00	0.95		1.00	0.95	0.88
Frt	1.00	1.00	0.85	1.00	0.97		1.00	0.99		1.00	1.00	0.85
Flt Protected	0.95	1.00	1.00	0.95	1.00		0.95	1.00		0.95	1.00	1.00
Satd. Flow (prot)	3433	3539	1583	1770	3420		1770	3511		1770	3539	2787
Flt Permitted	0.95	1.00	1.00	0.95	1.00		0.95	1.00		0.95	1.00	1.00
Satd. Flow (perm)	3433	3539	1583	1770	3420		1770	3511		1770	3539	2787
Peak-hour factor, PHF	0.95	0.95	0.95	0.95	0.95	0.95	0.95	0.95	0.95	0.95	0.95	0.95
Adj. Flow (vph)	511	409	63	119	184	53	200	658	37	46	415	461
RTOR Reduction (vph)	0	0	0	0	15	0	0	3	0	0	0	279
Lane Group Flow (vph)	511	409	63	119	222	0	200	692	0	46	415	182
Turn Type	Prot		Free	Prot			Split			Split		pt+ov
Protected Phases	1	6		5	2		4	4		8	8	8 1
Permitted Phases			Free									
Actuated Green, G (s)	29.1	50.8	150.0	15.1	36.8		36.1	36.1		24.0	24.0	59.1
Effective Green, g (s)	29.1	50.8	150.0	15.1	36.8		36.1	36.1		24.0	24.0	59.1
Actuated g/C Ratio	0.19	0.34	1.00	0.10	0.25		0.24	0.24		0.16	0.16	0.39
Clearance Time (s)	6.0	6.0		6.0	6.0		6.0	6.0		6.0	6.0	
Vehicle Extension (s)	3.0	3.0		3.0	3.0		3.0	3.0		3.0	3.0	
Lane Grp Cap (vph)	666	1199	1583	178	839		426	845		283	566	1098
v/s Ratio Prot	c0.15	c0.12		0.07	0.06		0.11	c0.20		0.03	c0.12	0.07
v/s Ratio Perm			0.04									
v/c Ratio	0.77	0.34	0.04	0.67	0.26		0.47	0.82		0.16	0.73	0.17
Uniform Delay, d1	57.2	37.1	0.0	65.0	45.7		48.8	53.9		54.3	60.0	29.5
Progression Factor	0.51	0.40	1.00	1.27	0.87		1.24	1.23		1.00	1.00	1.00
Incremental Delay, d2	0.5	0.1	0.0	7.9	0.7		0.5	4.1		0.3	4.9	0.1
Delay (s)	29.9	14.9	0.0	90.5	40.4		61.1	70.5		54.6	64.8	29.5
Level of Service	C	B	A	F	D		E	E		D	E	C
Approach Delay (s)		21.7			57.2			68.4			46.7	
Approach LOS		C			E			E			D	

Intersection Summary			
HCM Average Control Delay	46.2	HCM Level of Service	D
HCM Volume to Capacity ratio	0.63		
Actuated Cycle Length (s)	150.0	Sum of lost time (s)	18.0
Intersection Capacity Utilization	62.0%	ICU Level of Service	B
Analysis Period (min)	15		
c Critical Lane Group			

Intersection Sign configuration not allowed in HCM analysis.

Movement	EBL	EBT	EBR	WBL	WBT	WBR	NBL	NBT	NBR	SBL	SBT	SBR
Lane Configurations												
Volume (vph)	344	25	89	20	40	40	121	281	15	5	729	167
Ideal Flow (vphpl)	1900	1900	1900	1900	1900	1900	1900	1900	1900	1900	1900	1900
Total Lost time (s)		6.0	6.0	6.0	6.0		6.0	6.0		6.0	6.0	
Lane Util. Factor		1.00	0.88	1.00	1.00		0.97	0.95		1.00	0.95	
Frt		1.00	0.85	1.00	0.93		1.00	0.99		1.00	0.97	
Flt Protected		0.96	1.00	0.95	1.00		0.95	1.00		0.95	1.00	
Satd. Flow (prot)		1780	2787	1770	1723		3433	3512		1770	3440	
Flt Permitted		0.96	1.00	0.53	1.00		0.95	1.00		0.56	1.00	
Satd. Flow (perm)		1780	2787	992	1723		3433	3512		1047	3440	
Peak-hour factor, PHF	0.95	0.95	0.95	0.95	0.95	0.95	0.95	0.95	0.95	0.95	0.95	0.95
Adj. Flow (vph)	362	26	94	21	42	42	127	296	16	5	767	176
RTOR Reduction (vph)	0	0	69	0	25	0	0	2	0	0	12	0
Lane Group Flow (vph)	0	388	25	21	59	0	127	310	0	5	931	0
Turn Type	Split		Perm	Perm			Prot			Perm		
Protected Phases	4	4			8		5	2			6	
Permitted Phases			4	8						6		
Actuated Green, G (s)		37.6	37.6	11.2	11.2		10.1	83.2		67.1	67.1	
Effective Green, g (s)		37.6	37.6	11.2	11.2		10.1	83.2		67.1	67.1	
Actuated g/C Ratio		0.25	0.25	0.07	0.07		0.07	0.55		0.45	0.45	
Clearance Time (s)		6.0	6.0	6.0	6.0		6.0	6.0		6.0	6.0	
Vehicle Extension (s)		3.0	3.0	3.0	3.0		3.0	3.0		3.0	3.0	
Lane Grp Cap (vph)		446	699	74	129		231	1948		468	1539	
v/s Ratio Prot		c0.22			c0.03		c0.04	0.09			c0.27	
v/s Ratio Perm			0.01	0.02						0.00		
v/c Ratio		0.87	0.04	0.28	0.46		0.55	0.16		0.01	0.61	
Uniform Delay, d1		53.9	42.5	65.6	66.5		67.7	16.3		23.0	31.4	
Progression Factor		0.65	0.71	1.00	1.00		0.84	1.04		0.73	0.63	
Incremental Delay, d2		15.7	0.0	2.1	2.6		2.5	0.2		0.0	0.9	
Delay (s)		50.9	30.2	67.7	69.1		59.1	17.1		16.8	20.7	
Level of Service		D	C	E	E		E	B		B	C	
Approach Delay (s)		46.9			68.8			29.3			20.7	
Approach LOS		D			E			C			C	

Intersection Summary			
HCM Average Control Delay	31.5	HCM Level of Service	C
HCM Volume to Capacity ratio	0.67		
Actuated Cycle Length (s)	150.0	Sum of lost time (s)	24.0
Intersection Capacity Utilization	71.0%	ICU Level of Service	C
Analysis Period (min)	15		
c Critical Lane Group			

Movement	EBL	EBT	EBR	WBL	WBT	WBR	NBL	NBT	NBR	SBL	SBT	SBR
Lane Configurations												
Volume (vph)	130	1049	1257	40	1131	60	1811	660	130	175	219	113
Ideal Flow (vphpl)	1900	1900	1900	1900	1900	1900	1900	1900	1900	1900	1900	1900
Total Lost time (s)	6.0	6.0	6.0	6.0	6.0		6.0	6.0		6.0	6.0	6.0
Lane Util. Factor	1.00	0.95	1.00	1.00	0.95		0.97	0.95		1.00	1.00	1.00
Frt	1.00	1.00	0.85	1.00	0.99		1.00	0.98		1.00	1.00	0.85
Flt Protected	0.95	1.00	1.00	0.95	1.00		0.95	1.00		0.95	1.00	1.00
Satd. Flow (prot)	1770	3539	1583	1770	3513		3433	3452		1770	1863	1583
Flt Permitted	0.09	1.00	1.00	0.09	1.00		0.95	1.00		0.95	1.00	1.00
Satd. Flow (perm)	169	3539	1583	177	3513		3433	3452		1770	1863	1583
Peak-hour factor, PHF	0.95	0.95	0.95	0.95	0.95	0.95	0.95	0.95	0.95	0.95	0.95	0.95
Adj. Flow (vph)	137	1104	1323	42	1191	63	1906	695	137	184	231	119
RTOR Reduction (vph)	0	0	568	0	2	0	0	10	0	0	0	40
Lane Group Flow (vph)	137	1104	755	42	1252	0	1906	822	0	184	231	79
Turn Type	pm+pt		Perm	pm+pt			Prot			Prot		Perm
Protected Phases	7	4		3	8		5	2		1	6	
Permitted Phases	4		4	8								6
Actuated Green, G (s)	49.0	44.0	44.0	45.4	42.2		60.0	58.6		20.2	18.8	18.8
Effective Green, g (s)	49.0	44.0	44.0	45.4	42.2		60.0	58.6		20.2	18.8	18.8
Actuated g/C Ratio	0.33	0.29	0.29	0.30	0.28		0.40	0.39		0.13	0.13	0.13
Clearance Time (s)	6.0	6.0	6.0	6.0	6.0		6.0	6.0		6.0	6.0	6.0
Vehicle Extension (s)	3.0	3.0	3.0	3.0	3.0		3.0	3.0		3.0	3.0	3.0
Lane Grp Cap (vph)	109	1038	464	88	988		1373	1349		238	233	198
v/s Ratio Prot	c0.04	0.31		0.01	0.36		c0.56	0.24		0.10	c0.12	
v/s Ratio Perm	0.37		c0.48	0.14								0.05
v/c Ratio	1.26	1.06	1.63	0.48	1.27		1.39	0.61		0.77	0.99	0.40
Uniform Delay, d1	74.7	53.0	53.0	43.3	53.9		45.0	36.5		62.7	65.5	60.4
Progression Factor	1.00	1.00	1.00	0.73	0.90		0.88	0.48		1.61	0.47	0.43
Incremental Delay, d2	159.8	43.2	289.5	2.6	125.6		177.1	1.1		12.5	52.2	5.0
Delay (s)	234.5	96.2	342.5	34.3	173.8		216.9	18.5		113.6	82.9	31.2
Level of Service	F	F	F	C	F		F	B		F	F	C
Approach Delay (s)		230.7			169.3			156.6			82.0	
Approach LOS		F			F			F			F	

Intersection Summary			
HCM Average Control Delay	180.0	HCM Level of Service	F
HCM Volume to Capacity ratio	1.36		
Actuated Cycle Length (s)	150.0	Sum of lost time (s)	18.0
Intersection Capacity Utilization	123.6%	ICU Level of Service	H
Analysis Period (min)	15		
c Critical Lane Group			

Movement	EBL	EBT	EBR	WBL	WBT	WBR	NBL	NBT	NBR	SBL	SBT	SBR
Lane Configurations												
Volume (vph)	80	1050	94	580	889	207	245	64	635	157	662	30
Ideal Flow (vphpl)	1900	1900	1900	1900	1900	1900	1900	1900	1900	1900	1900	1900
Lane Width	11	11	11	11	11	11	11	11	11	11	11	11
Total Lost time (s)	6.0	6.0		6.0	6.0	6.0	6.0	6.0		6.0	6.0	
Lane Util. Factor	1.00	0.95		1.00	0.95	0.88	1.00	1.00		0.97	1.00	
Frt	1.00	0.99		1.00	1.00	0.85	1.00	0.86		1.00	0.99	
Flt Protected	0.95	1.00		0.95	1.00	1.00	0.95	1.00		0.95	1.00	
Satd. Flow (prot)	1711	3379		1711	3421	2694	1711	1555		3319	1789	
Flt Permitted	0.22	1.00		0.09	1.00	1.00	0.95	1.00		0.95	1.00	
Satd. Flow (perm)	397	3379		168	3421	2694	1711	1555		3319	1789	
Peak-hour factor, PHF	0.95	0.95	0.95	0.95	0.95	0.95	0.95	0.95	0.95	0.95	0.95	0.95
Adj. Flow (vph)	84	1105	99	611	936	218	258	67	668	165	697	32
RTOR Reduction (vph)	0	5	0	0	0	0	0	239	0	0	1	0
Lane Group Flow (vph)	84	1199	0	611	936	218	258	496	0	165	728	0
Turn Type	pm+pt			pm+pt		pt+ov	Split			Split		
Protected Phases	1	6		5	2	2 8	4	4		8	8	
Permitted Phases	6			2								
Actuated Green, G (s)	43.9	37.0		69.0	56.1	93.1	26.0	26.0		37.0	37.0	
Effective Green, g (s)	43.9	37.0		69.0	56.1	93.1	26.0	26.0		37.0	37.0	
Actuated g/C Ratio	0.29	0.25		0.46	0.37	0.62	0.17	0.17		0.25	0.25	
Clearance Time (s)	6.0	6.0		6.0	6.0		6.0	6.0		6.0	6.0	
Vehicle Extension (s)	3.0	3.0		3.0	3.0		3.0	3.0		3.0	3.0	
Lane Grp Cap (vph)	177	833		345	1279	1672	297	270		819	441	
v/s Ratio Prot	0.02	0.35		c0.31	0.27	0.08	0.15	c0.32		0.05	c0.41	
v/s Ratio Perm	0.12			c0.51								
v/c Ratio	0.47	1.44		1.77	0.73	0.13	0.87	1.84		0.20	1.65	
Uniform Delay, d1	39.9	56.5		64.2	40.5	11.7	60.3	62.0		44.8	56.5	
Progression Factor	0.62	0.78		1.32	0.73	1.15	0.85	0.90		0.46	0.56	
Incremental Delay, d2	0.6	200.1		354.3	2.4	0.0	21.4	390.1		0.1	301.7	
Delay (s)	25.5	244.3		439.0	31.9	13.5	72.4	446.0		20.6	333.5	
Level of Service	C	F		F	C	B	E	F		C	F	
Approach Delay (s)		230.0			170.5			348.9			275.8	
Approach LOS		F			F			F			F	

Intersection Summary			
HCM Average Control Delay	241.0	HCM Level of Service	F
HCM Volume to Capacity ratio	1.71		
Actuated Cycle Length (s)	150.0	Sum of lost time (s)	18.0
Intersection Capacity Utilization	134.4%	ICU Level of Service	H
Analysis Period (min)	15		

c Critical Lane Group

Movement	EBL	EBT	EBR	WBL	WBT	WBR	NBL	NBT	NBR	SBL	SBT	SBR
Lane Configurations												
Volume (vph)	125	2021	96	165	1277	235	64	5	129	325	0	100
Ideal Flow (vphpl)	1900	1900	1900	1900	1900	1900	1900	1900	1900	1900	1900	1900
Total Lost time (s)	6.0	6.0		6.0	6.0	6.0	6.0	6.0		6.0	6.0	
Lane Util. Factor	1.00	0.95		1.00	0.95	1.00	1.00	1.00		0.95	0.95	
Frt	1.00	0.99		1.00	1.00	0.85	1.00	0.86		1.00	0.93	
Flt Protected	0.95	1.00		0.95	1.00	1.00	0.95	1.00		0.95	0.97	
Satd. Flow (prot)	1770	3515		1770	3539	1583	1770	1593		1681	1600	
Flt Permitted	0.12	1.00		0.05	1.00	1.00	0.95	1.00		0.95	0.97	
Satd. Flow (perm)	217	3515		85	3539	1583	1770	1593		1681	1600	
Peak-hour factor, PHF	0.95	0.95	0.95	0.95	0.95	0.95	0.95	0.95	0.95	0.95	0.95	0.95
Adj. Flow (vph)	132	2127	101	174	1344	247	67	5	136	342	0	105
RTOR Reduction (vph)	0	2	0	0	0	92	0	12	0	0	22	0
Lane Group Flow (vph)	132	2226	0	174	1344	155	67	129	0	229	196	0
Turn Type	pm+pt			Perm		Perm	Split			Split		
Protected Phases	7	4			8		2	2		6	6	
Permitted Phases	4			8		8						
Actuated Green, G (s)	98.0	98.0		88.0	88.0	88.0	17.0	17.0		17.0	17.0	
Effective Green, g (s)	98.0	98.0		88.0	88.0	88.0	17.0	17.0		17.0	17.0	
Actuated g/C Ratio	0.65	0.65		0.59	0.59	0.59	0.11	0.11		0.11	0.11	
Clearance Time (s)	6.0	6.0		6.0	6.0	6.0	6.0	6.0		6.0	6.0	
Vehicle Extension (s)	3.0	3.0		3.0	3.0	3.0	3.0	3.0		3.0	3.0	
Lane Grp Cap (vph)	183	2296		50	2076	929	201	181		191	181	
v/s Ratio Prot	0.02	c0.63			0.38		0.04	c0.08		c0.14	0.12	
v/s Ratio Perm	0.45			c2.06		0.10						
v/c Ratio	0.72	0.97		3.48	0.65	0.17	0.33	0.72		1.20	1.08	
Uniform Delay, d1	19.0	24.6		31.0	20.7	14.2	61.3	64.2		66.5	66.5	
Progression Factor	1.06	0.67		0.79	0.65	0.16	1.00	1.00		1.00	1.00	
Incremental Delay, d2	9.1	9.3		1164.2	0.7	0.1	4.4	21.4		129.0	90.4	
Delay (s)	29.2	25.9		1188.6	14.1	2.4	65.7	85.6		195.5	156.9	
Level of Service	C	C		F	B	A	E	F		F	F	
Approach Delay (s)		26.1			128.3			79.2			176.7	
Approach LOS		C			F			E			F	

Intersection Summary			
HCM Average Control Delay	80.2	HCM Level of Service	F
HCM Volume to Capacity ratio	2.75		
Actuated Cycle Length (s)	150.0	Sum of lost time (s)	24.0
Intersection Capacity Utilization	108.4%	ICU Level of Service	G
Analysis Period (min)	15		
c Critical Lane Group			

Movement	WBL	WBR	NBT	NBR	SBL	SBT
Lane Configurations						
Volume (vph)	344	0	195	464	215	137
Ideal Flow (vphpl)	1900	1900	1900	1900	1900	1900
Total Lost time (s)	6.0		6.0	6.0	6.0	6.0
Lane Util. Factor	1.00		1.00	1.00	1.00	1.00
Frt	1.00		1.00	0.85	1.00	1.00
Flt Protected	0.95		1.00	1.00	0.95	1.00
Satd. Flow (prot)	1770		1863	1583	1770	1863
Flt Permitted	0.95		1.00	1.00	0.63	1.00
Satd. Flow (perm)	1770		1863	1583	1172	1863
Peak-hour factor, PHF	0.95	0.95	0.95	0.95	0.95	0.95
Adj. Flow (vph)	362	0	205	488	226	144
RTOR Reduction (vph)	0	0	0	211	0	0
Lane Group Flow (vph)	362	0	205	277	226	144
Turn Type		Perm		Perm	Perm	
Protected Phases	8		2			6
Permitted Phases		8		2	6	
Actuated Green, G (s)	20.5		42.5	42.5	42.5	42.5
Effective Green, g (s)	20.5		42.5	42.5	42.5	42.5
Actuated g/C Ratio	0.27		0.57	0.57	0.57	0.57
Clearance Time (s)	6.0		6.0	6.0	6.0	6.0
Vehicle Extension (s)	3.0		3.0	3.0	3.0	3.0
Lane Grp Cap (vph)	484		1056	897	664	1056
v/s Ratio Prot	c0.20		0.11			0.08
v/s Ratio Perm				0.17	c0.19	
v/c Ratio	0.75		0.19	0.31	0.34	0.14
Uniform Delay, d1	24.9		7.9	8.5	8.7	7.6
Progression Factor	0.78		0.92	0.99	1.00	1.00
Incremental Delay, d2	4.6		0.4	0.8	1.4	0.3
Delay (s)	23.9		7.6	9.2	10.1	7.9
Level of Service	C		A	A	B	A
Approach Delay (s)	23.9		8.8			9.3
Approach LOS	C		A			A

Intersection Summary			
HCM Average Control Delay	12.7	HCM Level of Service	B
HCM Volume to Capacity ratio	0.47		
Actuated Cycle Length (s)	75.0	Sum of lost time (s)	12.0
Intersection Capacity Utilization	56.2%	ICU Level of Service	B
Analysis Period (min)	15		
c Critical Lane Group			

Movement	EBL	EBT	EBR	WBL	WBT	WBR	NBL	NBT	NBR	SBL	SBT	SBR
Lane Configurations												
Volume (vph)	222	459	85	0	144	85	88	771	0	249	547	199
Ideal Flow (vphpl)	1900	1900	1900	1900	1900	1900	1900	1900	1900	1900	1900	1900
Total Lost time (s)	6.0	6.0	6.0		6.0	6.0		6.0		6.0	6.0	
Lane Util. Factor	1.00	0.95	1.00		0.95	1.00		0.95		0.91	0.91	
Frt	1.00	1.00	0.85		1.00	0.85		1.00		1.00	0.96	
Flt Protected	0.95	1.00	1.00		1.00	1.00		0.99		0.95	1.00	
Satd. Flow (prot)	1770	3539	1583		3539	1583		3521		1610	3254	
Flt Permitted	0.43	1.00	1.00		1.00	1.00		0.99		0.95	1.00	
Satd. Flow (perm)	802	3539	1583		3539	1583		3521		1610	3254	
Peak-hour factor, PHF	0.95	0.95	0.95	0.95	0.95	0.95	0.95	0.95	0.95	0.95	0.95	0.95
Adj. Flow (vph)	234	483	89	0	152	89	93	812	0	262	576	209
RTOR Reduction (vph)	0	0	67	0	0	82	0	0	0	0	21	0
Lane Group Flow (vph)	234	483	22	0	152	7	0	905	0	236	790	0
Turn Type	pm+pt		Perm			Perm	Split			Split		
Protected Phases	7	4			8		2	2		6	6	
Permitted Phases	4		4			8						
Actuated Green, G (s)	37.1	37.1	37.1		12.6	12.6		50.9		44.0	44.0	
Effective Green, g (s)	37.1	37.1	37.1		12.6	12.6		50.9		44.0	44.0	
Actuated g/C Ratio	0.25	0.25	0.25		0.08	0.08		0.34		0.29	0.29	
Clearance Time (s)	6.0	6.0	6.0		6.0	6.0		6.0		6.0	6.0	
Vehicle Extension (s)	3.0	3.0	3.0		3.0	3.0		3.0		3.0	3.0	
Lane Grp Cap (vph)	318	875	392		297	133		1195		472	955	
v/s Ratio Prot	c0.09	0.14			0.04			c0.26		0.15	c0.24	
v/s Ratio Perm	c0.09		0.01			0.00						
v/c Ratio	0.74	0.55	0.06		0.51	0.06		0.76		0.50	0.83	
Uniform Delay, d1	49.1	49.2	43.1		65.8	63.2		44.1		43.9	49.4	
Progression Factor	0.94	0.95	1.08		0.83	0.85		0.84		0.57	0.55	
Incremental Delay, d2	8.1	0.7	0.1		1.5	0.2		0.4		3.5	7.7	
Delay (s)	54.4	47.2	46.8		56.4	53.7		37.6		28.4	35.0	
Level of Service	D	D	D		E	D		D		C	D	
Approach Delay (s)		49.3			55.4			37.6			33.5	
Approach LOS		D			E			D			C	

Intersection Summary			
HCM Average Control Delay	40.8	HCM Level of Service	D
HCM Volume to Capacity ratio	0.76		
Actuated Cycle Length (s)	150.0	Sum of lost time (s)	18.0
Intersection Capacity Utilization	79.3%	ICU Level of Service	D
Analysis Period (min)	15		
c Critical Lane Group			

Movement	EBL	EBT	EBR	WBL	WBT	WBR	NBL	NBT	NBR	SBL	SBT	SBR
Lane Configurations												
Volume (vph)	10	1352	90	50	887	10	105	5	135	5	5	0
Ideal Flow (vphpl)	1900	1900	1900	1900	1900	1900	1900	1900	1900	1900	1900	1900
Total Lost time (s)	6.0	6.0		6.0	6.0		6.0	6.0			6.0	
Lane Util. Factor	1.00	0.95		1.00	0.95		1.00	1.00			1.00	
Frt	1.00	0.99		1.00	1.00		1.00	0.86			1.00	
Flt Protected	0.95	1.00		0.95	1.00		0.95	1.00			0.98	
Satd. Flow (prot)	1770	3506		1770	3533		1770	1593			1817	
Flt Permitted	0.29	1.00		0.07	1.00		0.75	1.00			0.90	
Satd. Flow (perm)	548	3506		131	3533		1399	1593			1682	
Peak-hour factor, PHF	0.95	0.95	0.95	0.95	0.95	0.95	0.95	0.95	0.95	0.95	0.95	0.95
Adj. Flow (vph)	11	1423	95	53	934	11	111	5	142	5	5	0
RTOR Reduction (vph)	0	4	0	0	1	0	0	96	0	0	0	0
Lane Group Flow (vph)	11	1514	0	53	944	0	111	51	0	0	10	0
Turn Type	Perm			pm+pt			Perm			Perm		
Protected Phases		4		3	8			2			6	
Permitted Phases	4			8			2			6		
Actuated Green, G (s)	83.9	83.9		96.1	96.1		41.9	41.9			41.9	
Effective Green, g (s)	83.9	83.9		96.1	96.1		41.9	41.9			41.9	
Actuated g/C Ratio	0.56	0.56		0.64	0.64		0.28	0.28			0.28	
Clearance Time (s)	6.0	6.0		6.0	6.0		6.0	6.0			6.0	
Vehicle Extension (s)	3.0	3.0		3.0	3.0		3.0	3.0			3.0	
Lane Grp Cap (vph)	307	1961		152	2263		391	445			470	
v/s Ratio Prot		c0.43		0.01	c0.27			0.03				
v/s Ratio Perm	0.02			0.21			c0.08				0.01	
v/c Ratio	0.04	0.77		0.35	0.42		0.28	0.11			0.02	
Uniform Delay, d1	14.9	25.6		21.1	13.2		42.3	40.2			39.2	
Progression Factor	0.58	0.44		1.00	1.00		1.00	1.00			1.00	
Incremental Delay, d2	0.0	1.9		1.4	0.1		1.8	0.5			0.1	
Delay (s)	8.7	13.2		22.5	13.3		44.1	40.8			39.3	
Level of Service	A	B		C	B		D	D			D	
Approach Delay (s)		13.2			13.8			42.2			39.3	
Approach LOS		B			B			D			D	

Intersection Summary			
HCM Average Control Delay	16.2	HCM Level of Service	B
HCM Volume to Capacity ratio	0.61		
Actuated Cycle Length (s)	150.0	Sum of lost time (s)	18.0
Intersection Capacity Utilization	61.8%	ICU Level of Service	B
Analysis Period (min)	15		
c Critical Lane Group			

Movement	EBL	EBT	EBR	WBL	WBT	WBR	NBL	NBT	NBR	SBL	SBT	SBR
Lane Configurations												
Volume (vph)	50	669	757	224	804	114	1035	551	153	209	1051	32
Ideal Flow (vphpl)	1900	1900	1900	1900	1900	1900	1900	1900	1900	1900	1900	1900
Total Lost time (s)	6.0	6.0	6.0	6.0	6.0		6.0	6.0	6.0	6.0	6.0	
Lane Util. Factor	1.00	0.95	1.00	0.97	0.95		0.97	0.95	1.00	1.00	0.95	
Frt	1.00	1.00	0.85	1.00	0.98		1.00	1.00	0.85	1.00	1.00	
Flt Protected	0.95	1.00	1.00	0.95	1.00		0.95	1.00	1.00	0.95	1.00	
Satd. Flow (prot)	1770	3539	1583	3433	3473		3433	3539	1583	1770	3523	
Flt Permitted	0.95	1.00	1.00	0.95	1.00		0.95	1.00	1.00	0.95	1.00	
Satd. Flow (perm)	1770	3539	1583	3433	3473		3433	3539	1583	1770	3523	
Peak-hour factor, PHF	0.95	0.95	0.95	0.95	0.95	0.95	0.95	0.95	0.95	0.95	0.95	0.95
Adj. Flow (vph)	53	704	797	236	846	120	1089	580	161	220	1106	34
RTOR Reduction (vph)	0	0	252	0	8	0	0	0	123	0	1	0
Lane Group Flow (vph)	53	704	545	236	958	0	1089	580	38	220	1139	0
Turn Type	Prot		Perm	Prot			Split		Perm	Split		
Protected Phases	7	4		3	8		1	1		2	2	
Permitted Phases			4						1			
Actuated Green, G (s)	5.6	37.6	37.6	14.6	46.6		35.0	35.0	35.0	38.8	38.8	
Effective Green, g (s)	5.6	37.6	37.6	14.6	46.6		35.0	35.0	35.0	38.8	38.8	
Actuated g/C Ratio	0.04	0.25	0.25	0.10	0.31		0.23	0.23	0.23	0.26	0.26	
Clearance Time (s)	6.0	6.0	6.0	6.0	6.0		6.0	6.0	6.0	6.0	6.0	
Vehicle Extension (s)	3.0	3.0	3.0	3.0	3.0		3.0	3.0	3.0	3.0	3.0	
Lane Grp Cap (vph)	66	887	397	334	1079		801	826	369	458	911	
v/s Ratio Prot	0.03	0.20		c0.07	c0.28		c0.32	0.16		0.12	c0.32	
v/s Ratio Perm			c0.34						0.02			
v/c Ratio	0.80	0.79	1.37	0.71	0.89		1.36	0.70	0.10	0.48	1.25	
Uniform Delay, d1	71.7	52.6	56.2	65.6	49.2		57.5	52.7	45.2	47.1	55.6	
Progression Factor	1.02	1.02	1.02	1.14	0.77		0.53	0.50	0.35	0.98	0.95	
Incremental Delay, d2	6.3	0.5	169.5	5.8	8.0		162.6	0.2	0.0	2.1	118.0	
Delay (s)	79.6	54.2	227.1	80.4	46.1		193.0	26.6	15.9	48.2	170.6	
Level of Service	E	D	F	F	D		F	C	B	D	F	
Approach Delay (s)		143.7			52.8			124.7			150.8	
Approach LOS		F			D			F			F	

Intersection Summary			
HCM Average Control Delay	121.1	HCM Level of Service	F
HCM Volume to Capacity ratio	1.33		
Actuated Cycle Length (s)	150.0	Sum of lost time (s)	30.0
Intersection Capacity Utilization	108.8%	ICU Level of Service	G
Analysis Period (min)	15		
c Critical Lane Group			

Movement	EBL	EBT	EBR	WBL	WBT	WBR	NBL	NBT	NBR	SBL	SBT	SBR
Lane Configurations												
Volume (vph)	147	645	278	58	652	85	537	74	33	120	51	75
Ideal Flow (vphpl)	1900	1900	1900	1900	1900	1900	1900	1900	1900	1900	1900	1900
Total Lost time (s)	6.0	6.0	6.0	6.0	6.0	6.0	6.0	6.0	6.0	6.0	6.0	
Lane Util. Factor	1.00	0.95	1.00	1.00	0.95	1.00	0.95	0.95	1.00	1.00	1.00	
Frt	1.00	1.00	0.85	1.00	1.00	0.85	1.00	1.00	0.85	1.00	0.91	
Flt Protected	0.95	1.00	1.00	0.95	1.00	1.00	0.95	0.96	1.00	0.95	1.00	
Satd. Flow (prot)	1770	3539	1583	1770	3539	1583	1681	1705	1583	1770	1697	
Flt Permitted	0.31	1.00	1.00	0.32	1.00	1.00	0.95	0.49	1.00	0.95	1.00	
Satd. Flow (perm)	586	3539	1583	593	3539	1583	1681	864	1583	1770	1697	
Peak-hour factor, PHF	0.95	0.95	0.95	0.95	0.95	0.95	0.95	0.95	0.95	0.95	0.95	0.95
Adj. Flow (vph)	155	679	293	61	686	89	565	78	35	126	54	79
RTOR Reduction (vph)	0	0	154	0	0	42	0	0	24	0	33	0
Lane Group Flow (vph)	155	679	139	61	686	47	322	321	11	126	100	0
Turn Type	Perm		Perm	Perm		Perm	Prot		Perm	Prot		
Protected Phases		4			8		5	2		1	6	
Permitted Phases	4		4	8		8			2			
Actuated Green, G (s)	71.0	71.0	71.0	71.0	71.0	71.0	33.9	67.0	45.9	15.1	27.1	
Effective Green, g (s)	71.0	71.0	71.0	71.0	71.0	71.0	33.9	67.0	45.9	15.1	27.1	
Actuated g/C Ratio	0.47	0.47	0.47	0.47	0.47	0.47	0.23	0.45	0.31	0.10	0.18	
Clearance Time (s)	6.0	6.0	6.0	6.0	6.0	6.0	6.0	6.0	6.0	6.0	6.0	
Vehicle Extension (s)	3.0	3.0	3.0	3.0	3.0	3.0	3.0	3.0	3.0	3.0	3.0	
Lane Grp Cap (vph)	277	1675	749	281	1675	749	380	576	484	178	307	
v/s Ratio Prot		0.19			0.19		c0.19	0.13		0.07	0.06	
v/s Ratio Perm	c0.26		0.09	0.10		0.03		c0.12	0.01			
v/c Ratio	0.56	0.41	0.19	0.22	0.41	0.06	0.85	0.56	0.02	0.71	0.33	
Uniform Delay, d1	28.3	25.7	22.8	23.2	25.8	21.4	55.6	30.6	36.4	65.3	53.5	
Progression Factor	1.25	1.27	7.18	0.24	0.25	0.00	0.91	0.92	0.75	1.05	1.02	
Incremental Delay, d2	6.1	0.6	0.4	0.2	0.1	0.0	15.9	1.2	0.1	12.0	2.8	
Delay (s)	41.5	33.2	164.1	5.8	6.5	0.1	66.7	29.2	27.5	80.5	57.1	
Level of Service	D	C	F	A	A	A	E	C	C	F	E	
Approach Delay (s)		68.4			5.7			46.9			68.5	
Approach LOS		E			A			D			E	

Intersection Summary			
HCM Average Control Delay	45.3	HCM Level of Service	D
HCM Volume to Capacity ratio	0.62		
Actuated Cycle Length (s)	150.0	Sum of lost time (s)	12.0
Intersection Capacity Utilization	70.3%	ICU Level of Service	C
Analysis Period (min)	15		
c Critical Lane Group			

Movement	EBL	EBR	NBL	NBT	SBT	SBR
Lane Configurations						
Volume (veh/h)	269	197	199	382	192	230
Sign Control	Stop			Free	Free	
Grade	0%			0%	0%	
Peak Hour Factor	0.95	0.95	0.95	0.95	0.95	0.95
Hourly flow rate (vph)	283	207	209	402	202	242
Pedestrians						
Lane Width (ft)						
Walking Speed (ft/s)						
Percent Blockage						
Right turn flare (veh)						
Median type				None	None	
Median storage veh)						
Upstream signal (ft)					1305	
pX, platoon unblocked						
vC, conflicting volume	1023	202	444			
vC1, stage 1 conf vol						
vC2, stage 2 conf vol						
vCu, unblocked vol	1023	202	444			
tC, single (s)	6.4	6.2	4.1			
tC, 2 stage (s)						
tF (s)	3.5	3.3	2.2			
p0 queue free %	0	75	81			
cM capacity (veh/h)	212	839	1116			

Direction, Lane #	EB 1	EB 2	NB 1	NB 2	SB 1	SB 2
Volume Total	283	207	209	402	202	242
Volume Left	283	0	209	0	0	0
Volume Right	0	207	0	0	0	242
cSH	212	839	1116	1700	1700	1700
Volume to Capacity	1.34	0.25	0.19	0.24	0.12	0.14
Queue Length 95th (ft)	392	24	17	0	0	0
Control Delay (s)	223.5	10.7	9.0	0.0	0.0	0.0
Lane LOS	F	B	A			
Approach Delay (s)	133.5		3.1		0.0	
Approach LOS	F					

Intersection Summary			
Average Delay	43.6		
Intersection Capacity Utilization	46.0%	ICU Level of Service	A
Analysis Period (min)	15		

Movement	EBL	EBT	EBR	WBL	WBT	WBR	NBL	NBT	NBR	SBL	SBT	SBR
Lane Configurations												
Volume (vph)	13	71	354	653	90	419	5	1520	738	391	1617	16
Ideal Flow (vphpl)	1900	1900	1900	1900	1900	1900	1900	1900	1900	1900	1900	1900
Total Lost time (s)		6.0		6.0	6.0		6.0	6.0	6.0	6.0	6.0	
Lane Util. Factor		0.95		0.97	1.00		1.00	0.95	1.00	1.00	0.91	
Frt		0.88		1.00	0.88		1.00	1.00	0.85	1.00	1.00	
Flt Protected		1.00		0.95	1.00		0.95	1.00	1.00	0.95	1.00	
Satd. Flow (prot)		3106		3433	1633		1770	3539	1583	1770	5078	
Flt Permitted		1.00		0.95	1.00		0.10	1.00	1.00	0.06	1.00	
Satd. Flow (perm)		3106		3433	1633		192	3539	1583	116	5078	
Peak-hour factor, PHF	0.95	0.95	0.95	0.95	0.95	0.95	0.95	0.95	0.95	0.95	0.95	0.95
Adj. Flow (vph)	14	75	373	687	95	441	5	1600	777	412	1702	17
RTOR Reduction (vph)	0	73	0	0	111	0	0	0	243	0	0	0
Lane Group Flow (vph)	0	389	0	687	425	0	5	1600	534	412	1719	0
Turn Type	Split			Split			pm+pt		Perm	pm+pt		
Protected Phases	4	4		8	8		5	2		1	6	
Permitted Phases							2		2	6		
Actuated Green, G (s)		16.0		30.0	30.0		59.2	58.0	58.0	86.0	78.8	
Effective Green, g (s)		16.0		30.0	30.0		59.2	58.0	58.0	86.0	78.8	
Actuated g/C Ratio		0.11		0.20	0.20		0.39	0.39	0.39	0.57	0.53	
Clearance Time (s)		6.0		6.0	6.0		6.0	6.0	6.0	6.0	6.0	
Vehicle Extension (s)		3.0		3.0	3.0		3.0	3.0	3.0	3.0	3.0	
Lane Grp Cap (vph)		331		687	327		88	1368	612	309	2668	
v/s Ratio Prot		c0.13		0.20	c0.26		0.00	0.45		c0.20	0.34	
v/s Ratio Perm							0.02		0.34	c0.57		
v/c Ratio		1.52dr		1.00	1.30		0.06	1.17	0.87	1.33	0.64	
Uniform Delay, d1		67.0		60.0	60.0		28.0	46.0	42.6	66.2	25.5	
Progression Factor		1.00		0.61	0.44		0.76	0.57	0.35	1.05	0.54	
Incremental Delay, d2		105.7		32.0	152.8		0.1	78.6	4.8	152.1	0.1	
Delay (s)		172.7		68.4	179.2		21.4	105.0	19.6	221.5	14.0	
Level of Service		F		E	F		C	F	B	F	B	
Approach Delay (s)		172.7			116.9			76.9			54.1	
Approach LOS		F			F			E			D	

Intersection Summary			
HCM Average Control Delay	84.1	HCM Level of Service	F
HCM Volume to Capacity ratio	1.27		
Actuated Cycle Length (s)	150.0	Sum of lost time (s)	18.0
Intersection Capacity Utilization	128.0%	ICU Level of Service	H
Analysis Period (min)	15		

dr Defacto Right Lane. Recode with 1 though lane as a right lane.
c Critical Lane Group

Movement	EBL	EBT	EBR	WBL	WBT	WBR	NBL	NBT	NBR	SBL	SBT	SBR
Lane Configurations												
Volume (vph)	35	1044	121	0	796	115	126	140	0	159	102	234
Ideal Flow (vphpl)	1900	1900	1900	1900	1900	1900	1900	1900	1900	1900	1900	1900
Total Lost time (s)	6.0	6.0			6.0		6.0	6.0		6.0	6.0	
Lane Util. Factor	1.00	0.95			0.95		1.00	0.95		1.00	0.95	
Frt	1.00	0.98			0.98		1.00	1.00		1.00	0.90	
Flt Protected	0.95	1.00			1.00		0.95	1.00		0.95	1.00	
Satd. Flow (prot)	1770	3484			3472		1770	3539		1770	3169	
Flt Permitted	0.10	1.00			1.00		0.95	1.00		0.95	1.00	
Satd. Flow (perm)	192	3484			3472		1770	3539		1770	3169	
Peak-hour factor, PHF	0.95	0.95	0.95	0.95	0.95	0.95	0.95	0.95	0.95	0.95	0.95	0.95
Adj. Flow (vph)	37	1099	127	0	838	121	133	147	0	167	107	246
RTOR Reduction (vph)	0	6	0	0	10	0	0	0	0	0	190	0
Lane Group Flow (vph)	37	1220	0	0	949	0	133	147	0	167	163	0
Turn Type	pm+pt			pm+pt			Prot			Prot		
Protected Phases	7	4		3	8		5	2		1	6	
Permitted Phases	4			8								
Actuated Green, G (s)	63.7	63.7			52.2		44.5	49.0		19.3	23.8	
Effective Green, g (s)	63.7	63.7			52.2		44.5	49.0		19.3	23.8	
Actuated g/C Ratio	0.42	0.42			0.35		0.30	0.33		0.13	0.16	
Clearance Time (s)	6.0	6.0			6.0		6.0	6.0		6.0	6.0	
Vehicle Extension (s)	3.0	3.0			3.0		3.0	3.0		3.0	3.0	
Lane Grp Cap (vph)	139	1480			1208		525	1156		228	503	
v/s Ratio Prot	0.01	c0.35			0.27		c0.08	0.04		c0.09	c0.05	
v/s Ratio Perm	0.10											
v/c Ratio	0.27	0.82			0.79		0.25	0.13		0.73	0.32	
Uniform Delay, d1	30.5	38.2			43.9		40.1	35.5		62.9	56.0	
Progression Factor	0.63	0.73			0.66		1.37	1.00		0.97	1.16	
Incremental Delay, d2	0.1	0.4			3.1		1.1	0.2		11.5	0.4	
Delay (s)	19.2	28.2			31.9		55.9	35.8		72.6	65.1	
Level of Service	B	C			C		E	D		E	E	
Approach Delay (s)		27.9			31.9			45.3			67.5	
Approach LOS		C			C			D			E	

Intersection Summary			
HCM Average Control Delay	37.6	HCM Level of Service	D
HCM Volume to Capacity ratio	0.61		
Actuated Cycle Length (s)	150.0	Sum of lost time (s)	18.0
Intersection Capacity Utilization	65.1%	ICU Level of Service	C
Analysis Period (min)	15		
c Critical Lane Group			

Movement	EBL	EBT	EBR	WBL	WBT	WBR	NBL	NBT	NBR	SBL	SBT	SBR
Lane Configurations												
Volume (vph)	29	757	100	510	403	15	128	338	640	14	282	26
Ideal Flow (vphpl)	1900	1900	1900	1900	1900	1900	1900	1900	1900	1900	1900	1900
Total Lost time (s)	6.0	6.0		6.0	6.0		6.0	6.0		6.0	6.0	
Lane Util. Factor	1.00	0.95		1.00	0.95		1.00	1.00		1.00	1.00	
Frt	1.00	0.98		1.00	0.99		1.00	0.90		1.00	0.99	
Flt Protected	0.95	1.00		0.95	1.00		0.95	1.00		0.95	1.00	
Satd. Flow (prot)	1593	3130		1593	3168		1593	1512		1593	1656	
Flt Permitted	0.95	1.00		0.95	1.00		0.95	1.00		0.95	1.00	
Satd. Flow (perm)	1593	3130		1593	3168		1593	1512		1593	1656	
Peak-hour factor, PHF	0.95	0.95	0.95	0.95	0.95	0.95	0.95	0.95	0.95	0.95	0.95	0.95
Adj. Flow (vph)	31	797	105	537	424	16	135	356	674	15	297	27
RTOR Reduction (vph)	0	7	0	0	2	0	0	41	0	0	2	0
Lane Group Flow (vph)	31	895	0	537	438	0	135	989	0	15	322	0
Turn Type	Prot			Prot			Prot			Prot		
Protected Phases	5	2		1	6		3	8		7	4	
Permitted Phases												
Actuated Green, G (s)	16.0	28.4		30.0	42.4		17.4	64.8		2.8	50.2	
Effective Green, g (s)	16.0	28.4		30.0	42.4		17.4	64.8		2.8	50.2	
Actuated g/C Ratio	0.11	0.19		0.20	0.28		0.12	0.43		0.02	0.33	
Clearance Time (s)	6.0	6.0		6.0	6.0		6.0	6.0		6.0	6.0	
Vehicle Extension (s)	3.0	3.0		3.0	3.0		3.0	3.0		3.0	3.0	
Lane Grp Cap (vph)	170	593		319	895		185	653		30	554	
v/s Ratio Prot	0.02	c0.29		c0.34	0.14		c0.08	c0.65		0.01	0.19	
v/s Ratio Perm												
v/c Ratio	0.18	1.51		1.68	0.49		0.73	1.51		0.50	0.58	
Uniform Delay, d1	61.0	60.8		60.0	44.8		64.0	42.6		72.9	41.2	
Progression Factor	1.36	1.00		0.61	0.72		1.00	1.00		1.12	1.06	
Incremental Delay, d2	2.0	236.3		319.6	1.7		13.4	239.1		12.4	4.4	
Delay (s)	84.9	296.9		356.3	33.8		77.5	281.7		94.0	47.9	
Level of Service	F	F		F	C		E	F		F	D	
Approach Delay (s)		289.9			211.1			258.0			50.0	
Approach LOS		F			F			F			D	

Intersection Summary			
HCM Average Control Delay	232.6	HCM Level of Service	F
HCM Volume to Capacity ratio	1.56		
Actuated Cycle Length (s)	150.0	Sum of lost time (s)	24.0
Intersection Capacity Utilization	144.9%	ICU Level of Service	H
Analysis Period (min)	15		
c Critical Lane Group			

Movement	EBL	EBT	EBR	WBL	WBT	WBR	NBL	NBT	NBR	SBL	SBT	SBR
Lane Configurations												
Volume (vph)	12	0	9	505	0	77	46	2184	604	140	2221	19
Ideal Flow (vphpl)	1900	1900	1900	1900	1900	1900	1900	1900	1900	1900	1900	1900
Total Lost time (s)		6.0		6.0		6.0	6.0	6.0		6.0	6.0	
Lane Util. Factor		1.00		1.00		1.00	1.00	0.91		1.00	0.91	
Frt		0.94		1.00		0.85	1.00	0.97		1.00	1.00	
Flt Protected		0.97		0.95		1.00	0.95	1.00		0.95	1.00	
Satd. Flow (prot)		1709		1770		1583	1770	4920		1770	5079	
Flt Permitted		0.97		0.95		1.00	0.05	1.00		0.05	1.00	
Satd. Flow (perm)		1709		1770		1583	88	4920		88	5079	
Peak-hour factor, PHF	0.95	0.95	0.95	0.95	0.95	0.95	0.95	0.95	0.95	0.95	0.95	0.95
Adj. Flow (vph)	13	0	9	532	0	81	48	2299	636	147	2338	20
RTOR Reduction (vph)	0	9	0	0	0	37	0	34	0	0	0	0
Lane Group Flow (vph)	0	13	0	532	0	44	48	2901	0	147	2358	0
Turn Type	Split			custom		custom	Perm			Perm		
Protected Phases	4	4		8				2			6	
Permitted Phases				8		8	2			6		
Actuated Green, G (s)		7.7		39.7		39.7	84.6	84.6		84.6	84.6	
Effective Green, g (s)		7.7		39.7		39.7	84.6	84.6		84.6	84.6	
Actuated g/C Ratio		0.05		0.26		0.26	0.56	0.56		0.56	0.56	
Clearance Time (s)		6.0		6.0		6.0	6.0	6.0		6.0	6.0	
Vehicle Extension (s)		3.0		3.0		3.0	3.0	3.0		3.0	3.0	
Lane Grp Cap (vph)		88		468		419	50	2775		50	2865	
v/s Ratio Prot		c0.01		c0.30				0.59			0.46	
v/s Ratio Perm						0.03	0.55			c1.67		
v/c Ratio		0.15		1.14		0.11	0.96	1.05		2.94	0.82	
Uniform Delay, d1		68.0		55.1		41.7	31.1	32.7		32.7	26.6	
Progression Factor		1.00		0.92		1.01	0.70	0.76		0.62	0.60	
Incremental Delay, d2		0.8		68.0		0.0	97.6	28.2		904.8	1.7	
Delay (s)		68.8		118.7		42.1	119.5	53.2		925.0	17.7	
Level of Service		E		F		D	F	D		F	B	
Approach Delay (s)		68.8			108.6			54.2			70.9	
Approach LOS		E			F			D			E	

Intersection Summary			
HCM Average Control Delay	66.5	HCM Level of Service	E
HCM Volume to Capacity ratio	2.25		
Actuated Cycle Length (s)	150.0	Sum of lost time (s)	18.0
Intersection Capacity Utilization	111.4%	ICU Level of Service	H
Analysis Period (min)	15		
c Critical Lane Group			

Movement	EBL	EBT	EBR	WBL	WBT	WBR	NBL	NBT	NBR	SBL	SBT	SBR
Lane Configurations												
Volume (vph)	158	24	82	172	25	58	294	2566	642	0	2563	205
Ideal Flow (vphpl)	1900	1900	1900	1900	1900	1900	1900	1900	1900	1900	1900	1900
Total Lost time (s)	6.0	6.0		6.0	6.0	6.0	6.0	6.0	6.0		6.0	
Lane Util. Factor	0.97	0.95		0.97	0.95	1.00	1.00	0.91	1.00		0.91	
Frt	1.00	0.88		1.00	1.00	0.85	1.00	1.00	0.85		0.99	
Flt Protected	0.95	1.00		0.95	1.00	1.00	0.95	1.00	1.00		1.00	
Satd. Flow (prot)	3433	3128		3433	3539	1583	1770	5085	1583		5029	
Flt Permitted	0.95	1.00		0.95	1.00	1.00	0.05	1.00	1.00		1.00	
Satd. Flow (perm)	3433	3128		3433	3539	1583	86	5085	1583		5029	
Peak-hour factor, PHF	0.95	0.95	0.95	0.95	0.95	0.95	0.95	0.95	0.95	0.95	0.95	0.95
Adj. Flow (vph)	166	25	86	181	26	61	309	2701	676	0	2698	216
RTOR Reduction (vph)	0	80	0	0	0	43	0	0	130	0	6	0
Lane Group Flow (vph)	166	31	0	181	26	18	309	2701	546	0	2908	0
Turn Type	Prot			Prot		Perm	pm+pt		Perm	pm+pt		
Protected Phases	7	4		3	8		5	2		1	6	
Permitted Phases						8	2		2	6		
Actuated Green, G (s)	10.3	11.3		8.0	9.0	9.0	112.7	112.7	112.7		80.8	
Effective Green, g (s)	10.3	11.3		8.0	9.0	9.0	112.7	112.7	112.7		80.8	
Actuated g/C Ratio	0.07	0.08		0.05	0.06	0.06	0.75	0.75	0.75		0.54	
Clearance Time (s)	6.0	6.0		6.0	6.0	6.0	6.0	6.0	6.0		6.0	
Vehicle Extension (s)	3.0	3.0		3.0	3.0	3.0	3.0	3.0	3.0		3.0	
Lane Grp Cap (vph)	236	236		183	212	95	355	3821	1189		2709	
v/s Ratio Prot	0.05	0.01		c0.05	0.01		c0.15	0.53			c0.58	
v/s Ratio Perm						c0.01	0.50		0.35			
v/c Ratio	0.70	0.13		0.99	0.12	0.19	0.87	0.71	0.46		1.07	
Uniform Delay, d1	68.4	64.8		71.0	66.8	67.0	52.4	9.9	7.1		34.6	
Progression Factor	1.00	1.00		0.79	0.31	0.56	1.20	0.80	1.54		0.52	
Incremental Delay, d2	9.1	0.3		17.2	0.0	0.1	16.0	0.9	1.0		37.3	
Delay (s)	77.5	65.0		73.2	20.7	37.3	79.1	8.8	11.9		55.2	
Level of Service	E	E		E	C	D	E	A	B		E	
Approach Delay (s)		72.5			60.0			15.2			55.2	
Approach LOS		E			E			B			E	

Intersection Summary			
HCM Average Control Delay	35.4	HCM Level of Service	D
HCM Volume to Capacity ratio	0.94		
Actuated Cycle Length (s)	150.0	Sum of lost time (s)	24.0
Intersection Capacity Utilization	96.9%	ICU Level of Service	F
Analysis Period (min)	15		
c Critical Lane Group			

Movement	EBL	EBT	EBR	WBL	WBT	WBR	NBL	NBT	NBR	SBL	SBT	SBR
Lane Configurations												
Volume (vph)	0	0	0	91	30	327	683	2882	0	0	2445	488
Ideal Flow (vphpl)	1900	1900	1900	1900	1900	1900	1900	1900	1900	1900	1900	1900
Total Lost time (s)				6.0	6.0	6.0	6.0	6.0			6.0	6.0
Lane Util. Factor				0.95	0.95	1.00	0.97	0.86			0.81	1.00
Frt				1.00	1.00	0.85	1.00	1.00			1.00	0.85
Flt Protected				0.95	0.98	1.00	0.95	1.00			1.00	1.00
Satd. Flow (prot)				1681	1726	1583	3433	6408			7544	1583
Flt Permitted				0.95	0.98	1.00	0.95	1.00			1.00	1.00
Satd. Flow (perm)				1681	1726	1583	3433	6408			7544	1583
Peak-hour factor, PHF	0.95	0.95	0.95	0.95	0.95	0.95	0.95	0.95	0.95	0.95	0.95	0.95
Adj. Flow (vph)	0	0	0	96	32	344	719	3034	0	0	2574	514
RTOR Reduction (vph)	0	0	0	0	0	2	0	0	0	0	0	284
Lane Group Flow (vph)	0	0	0	63	65	342	719	3034	0	0	2574	230
Turn Type				Perm		Perm	Prot					Perm
Protected Phases					8		5	2			6	
Permitted Phases				8		8						6
Actuated Green, G (s)				35.3	35.3	35.3	34.4	102.7			62.3	62.3
Effective Green, g (s)				35.3	35.3	35.3	34.4	102.7			62.3	62.3
Actuated g/C Ratio				0.24	0.24	0.24	0.23	0.68			0.42	0.42
Clearance Time (s)				6.0	6.0	6.0	6.0	6.0			6.0	6.0
Vehicle Extension (s)				3.0	3.0	3.0	3.0	3.0			3.0	3.0
Lane Grp Cap (vph)				396	406	373	787	4387			3133	657
v/s Ratio Prot							c0.21	0.47			c0.34	
v/s Ratio Perm				0.04	0.04	c0.22						0.15
v/c Ratio				0.16	0.16	0.92	0.91	0.69			0.82	0.35
Uniform Delay, d1				45.6	45.6	55.9	56.4	14.2			38.9	30.0
Progression Factor				1.00	1.00	1.00	1.24	0.66			0.55	0.41
Incremental Delay, d2				0.2	0.2	26.8	12.8	0.8			0.6	0.4
Delay (s)				45.7	45.8	82.8	82.4	10.2			22.0	12.7
Level of Service				D	D	F	F	B			C	B
Approach Delay (s)		0.0			72.7			24.0			20.5	
Approach LOS		A			E			C			C	

Intersection Summary			
HCM Average Control Delay	25.6	HCM Level of Service	C
HCM Volume to Capacity ratio	0.87		
Actuated Cycle Length (s)	150.0	Sum of lost time (s)	18.0
Intersection Capacity Utilization	81.4%	ICU Level of Service	D
Analysis Period (min)	15		
c Critical Lane Group			

Movement	EBL	EBT	EBR	WBL	WBT	WBR	NBL	NBT	NBR	SBL	SBT	SBR
Lane Configurations												
Volume (vph)	698	0	209	0	0	0	0	2511	208	135	2663	0
Ideal Flow (vphpl)	1900	1900	1900	1900	1900	1900	1900	1900	1900	1900	1900	1900
Total Lost time (s)	6.0		6.0					6.0		6.0	6.0	
Lane Util. Factor	0.97		0.88					0.76		0.97	0.91	
Frt	1.00		0.85					0.99		1.00	1.00	
Flt Protected	0.95		1.00					1.00		0.95	1.00	
Satd. Flow (prot)	3433		2787					8397		3433	5085	
Flt Permitted	0.95		1.00					1.00		0.95	1.00	
Satd. Flow (perm)	3433		2787					8397		3433	5085	
Peak-hour factor, PHF	0.95	0.95	0.95	0.95	0.95	0.95	0.95	0.95	0.95	0.95	0.95	0.95
Adj. Flow (vph)	735	0	220	0	0	0	0	2643	219	142	2803	0
RTOR Reduction (vph)	0	0	3	0	0	0	0	9	0	0	0	0
Lane Group Flow (vph)	735	0	217	0	0	0	0	2853	0	142	2803	0
Turn Type	custom		custom							Prot		
Protected Phases								2		1	6	
Permitted Phases	4		4									
Actuated Green, G (s)	37.9		37.9					83.7		10.4	100.1	
Effective Green, g (s)	37.9		37.9					83.7		10.4	100.1	
Actuated g/C Ratio	0.25		0.25					0.56		0.07	0.67	
Clearance Time (s)	6.0		6.0					6.0		6.0	6.0	
Vehicle Extension (s)	3.0		3.0					3.0		3.0	3.0	
Lane Grp Cap (vph)	867		704					4686		238	3393	
v/s Ratio Prot								0.34		0.04	c0.55	
v/s Ratio Perm	c0.21		0.08									
v/c Ratio	0.85		0.31					0.61		0.60	0.83	
Uniform Delay, d1	53.3		45.4					22.2		67.8	18.5	
Progression Factor	1.00		1.00					1.00		1.42	0.76	
Incremental Delay, d2	7.7		0.3					0.6		2.7	1.7	
Delay (s)	61.0		45.7					22.8		98.9	15.8	
Level of Service	E		D					C		F	B	
Approach Delay (s)		57.5			0.0			22.8			19.8	
Approach LOS		E			A			C			B	

Intersection Summary			
HCM Average Control Delay	26.4	HCM Level of Service	C
HCM Volume to Capacity ratio	0.83		
Actuated Cycle Length (s)	150.0	Sum of lost time (s)	12.0
Intersection Capacity Utilization	81.4%	ICU Level of Service	D
Analysis Period (min)	15		
c Critical Lane Group			

Movement	WBL	WBR	NBT	NBR	SBL	SBT
Lane Configurations						
Volume (vph)	221	193	650	74	124	1128
Ideal Flow (vphpl)	1900	1900	1900	1900	1900	1900
Total Lost time (s)	6.0		6.0			6.0
Lane Util. Factor	1.00		0.95			0.95
Frt	0.94		0.98			1.00
Flt Protected	0.97		1.00			1.00
Satd. Flow (prot)	1700		3485			3522
Flt Permitted	0.97		1.00			0.71
Satd. Flow (perm)	1700		3485			2509
Peak-hour factor, PHF	0.95	0.95	0.95	0.95	0.95	0.95
Adj. Flow (vph)	233	203	684	78	131	1187
RTOR Reduction (vph)	23	0	5	0	0	0
Lane Group Flow (vph)	413	0	757	0	0	1318
Turn Type					Perm	
Protected Phases	8		2			6
Permitted Phases					6	
Actuated Green, G (s)	36.5		101.5			101.5
Effective Green, g (s)	36.5		101.5			101.5
Actuated g/C Ratio	0.24		0.68			0.68
Clearance Time (s)	6.0		6.0			6.0
Vehicle Extension (s)	3.0		3.0			3.0
Lane Grp Cap (vph)	414		2358			1698
v/s Ratio Prot	c0.24		0.22			
v/s Ratio Perm						c0.53
v/c Ratio	1.00		0.32			0.78
Uniform Delay, d1	56.7		10.0			16.5
Progression Factor	0.97		1.42			0.96
Incremental Delay, d2	43.5		0.2			0.3
Delay (s)	98.3		14.5			16.1
Level of Service	F		B			B
Approach Delay (s)	98.3		14.5			16.1
Approach LOS	F		B			B

Intersection Summary			
HCM Average Control Delay	29.9	HCM Level of Service	C
HCM Volume to Capacity ratio	0.84		
Actuated Cycle Length (s)	150.0	Sum of lost time (s)	12.0
Intersection Capacity Utilization	94.2%	ICU Level of Service	F
Analysis Period (min)	15		
c Critical Lane Group			

Movement	EBL	EBT	EBR	WBL	WBT	WBR	NBL	NBT	NBR	SBL	SBT	SBR
Lane Configurations												
Volume (vph)	250	43	60	63	70	95	166	4033	48	27	2715	79
Ideal Flow (vphpl)	1900	1900	1900	1900	1900	1900	1900	1900	1900	1900	1900	1900
Total Lost time (s)		6.0	6.0		6.0		6.0	6.0		6.0	6.0	
Lane Util. Factor		1.00	1.00		1.00		1.00	0.86		1.00	0.86	
Frt		1.00	0.85		0.94		1.00	1.00		1.00	1.00	
Flt Protected		0.96	1.00		0.99		0.95	1.00		0.95	1.00	
Satd. Flow (prot)		1786	1583		1734		1770	6396		1770	6381	
Flt Permitted		0.51	1.00		0.54		0.95	1.00		0.95	1.00	
Satd. Flow (perm)		959	1583		958		1770	6396		1770	6381	
Peak-hour factor, PHF	0.95	0.95	0.95	0.95	0.95	0.95	0.95	0.95	0.95	0.95	0.95	0.95
Adj. Flow (vph)	263	45	63	66	74	100	175	4245	51	28	2858	83
RTOR Reduction (vph)	0	0	35	0	17	0	0	1	0	0	3	0
Lane Group Flow (vph)	0	308	28	0	223	0	175	4295	0	28	2939	0
Turn Type	Perm		Perm	Perm			Prot			Prot		
Protected Phases		4			8		5	2		1	6	
Permitted Phases	4		4	8								
Actuated Green, G (s)		42.0	42.0		42.0		15.0	86.8		3.2	75.0	
Effective Green, g (s)		42.0	42.0		42.0		15.0	86.8		3.2	75.0	
Actuated g/C Ratio		0.28	0.28		0.28		0.10	0.58		0.02	0.50	
Clearance Time (s)		6.0	6.0		6.0		6.0	6.0		6.0	6.0	
Vehicle Extension (s)		3.0	3.0		3.0		3.0	3.0		3.0	3.0	
Lane Grp Cap (vph)		269	443		268		177	3701		38	3191	
v/s Ratio Prot							c0.10	c0.67		0.02	0.46	
v/s Ratio Perm		c0.32	0.02		0.23							
v/c Ratio		1.14	0.06		0.83		0.99	1.16		0.74	0.92	
Uniform Delay, d1		54.0	39.6		50.7		67.4	31.6		73.0	34.8	
Progression Factor		1.00	1.01		1.00		1.20	0.92		0.95	0.85	
Incremental Delay, d2		99.8	0.1		19.2		17.5	72.6		35.7	3.6	
Delay (s)		153.5	40.0		69.9		98.6	101.6		105.3	33.1	
Level of Service		F	D		E		F	F		F	C	
Approach Delay (s)		134.2			69.9			101.5			33.8	
Approach LOS		F			E			F			C	

Intersection Summary			
HCM Average Control Delay	77.1	HCM Level of Service	E
HCM Volume to Capacity ratio	1.18		
Actuated Cycle Length (s)	150.0	Sum of lost time (s)	18.0
Intersection Capacity Utilization	111.7%	ICU Level of Service	H
Analysis Period (min)	15		
c Critical Lane Group			

Movement	WBL	WBR	NBT	NBR	SBL	SBT
Lane Configurations						
Volume (veh/h)	0	204	1538	409	0	2015
Sign Control	Stop		Free			Free
Grade	0%		0%			0%
Peak Hour Factor	0.95	0.95	0.95	0.95	0.95	0.95
Hourly flow rate (vph)	0	215	1619	431	0	2121
Pedestrians						
Lane Width (ft)						
Walking Speed (ft/s)						
Percent Blockage						
Right turn flare (veh)						
Median type			None			None
Median storage veh)						
Upstream signal (ft)			1039			442
pX, platoon unblocked	0.79	0.68			0.68	
vC, conflicting volume	2541	755			2049	
vC1, stage 1 conf vol						
vC2, stage 2 conf vol						
vCu, unblocked vol	92	0			890	
tC, single (s)	6.8	6.9			4.1	
tC, 2 stage (s)						
tF (s)	3.5	3.3			2.2	
p0 queue free %	100	71			100	
cM capacity (veh/h)	711	736			514	

Direction, Lane #	WB 1	NB 1	NB 2	NB 3	SB 1	SB 2	SB 3
Volume Total	215	648	648	754	707	707	707
Volume Left	0	0	0	0	0	0	0
Volume Right	215	0	0	431	0	0	0
cSH	736	1700	1700	1700	1700	1700	1700
Volume to Capacity	0.29	0.38	0.38	0.44	0.42	0.42	0.42
Queue Length 95th (ft)	30	0	0	0	0	0	0
Control Delay (s)	11.9	0.0	0.0	0.0	0.0	0.0	0.0
Lane LOS	B						
Approach Delay (s)	11.9	0.0			0.0		
Approach LOS	B						

Intersection Summary			
Average Delay	0.6		
Intersection Capacity Utilization	58.1%	ICU Level of Service	B
Analysis Period (min)	15		

Movement	EBL	EBT	EBR	WBL	WBT	WBR	NBL	NBT	NBR	SBL	SBT	SBR
Lane Configurations												
Volume (vph)	230	50	186	64	37	112	7	3611	40	68	2450	206
Ideal Flow (vphpl)	1900	1900	1900	1900	1900	1900	1900	1900	1900	1900	1900	1900
Total Lost time (s)	6.0	6.0		6.0	6.0		6.0	6.0		6.0	6.0	
Lane Util. Factor	1.00	1.00		1.00	1.00		1.00	0.91		1.00	0.91	
Frt	1.00	0.88		1.00	0.89		1.00	1.00		1.00	0.99	
Flt Protected	0.95	1.00		0.95	1.00		0.95	1.00		0.95	1.00	
Satd. Flow (prot)	1770	1643		1770	1653		1770	5077		1770	5026	
Flt Permitted	0.95	1.00		0.95	1.00		0.04	1.00		0.04	1.00	
Satd. Flow (perm)	1770	1643		1770	1653		83	5077		79	5026	
Peak-hour factor, PHF	0.95	0.95	0.95	0.95	0.95	0.95	0.95	0.95	0.95	0.95	0.95	0.95
Adj. Flow (vph)	242	53	196	67	39	118	7	3801	42	72	2579	217
RTOR Reduction (vph)	0	89	0	0	45	0	0	1	0	0	6	0
Lane Group Flow (vph)	242	160	0	67	112	0	7	3842	0	72	2790	0
Turn Type	Split			Split			pm+pt			pm+pt		
Protected Phases	4	4		8	8		5	2		1	6	
Permitted Phases							2			6		
Actuated Green, G (s)	17.0	17.0		13.6	13.6		90.9	90.1		99.9	94.6	
Effective Green, g (s)	17.0	17.0		13.6	13.6		90.9	90.1		99.9	94.6	
Actuated g/C Ratio	0.11	0.11		0.09	0.09		0.61	0.60		0.67	0.63	
Clearance Time (s)	6.0	6.0		6.0	6.0		6.0	6.0		6.0	6.0	
Vehicle Extension (s)	3.0	3.0		3.0	3.0		3.0	3.0		3.0	3.0	
Lane Grp Cap (vph)	201	186		160	150		59	3050		112	3170	
v/s Ratio Prot	c0.14	0.10		0.04	c0.07		0.00	c0.76		c0.02	c0.56	
v/s Ratio Perm							0.07			0.41		
v/c Ratio	1.20	0.86		0.42	0.74		0.12	1.26		0.64	0.88	
Uniform Delay, d1	66.5	65.3		64.5	66.5		25.1	30.0		38.6	23.0	
Progression Factor	0.93	0.87		1.00	1.00		0.26	0.34		2.81	0.50	
Incremental Delay, d2	129.3	31.2		1.8	17.9		0.1	117.1		1.1	0.4	
Delay (s)	191.1	88.2		66.2	84.4		6.6	127.2		109.5	11.8	
Level of Service	F	F		E	F		A	F		F	B	
Approach Delay (s)		138.9			79.0			127.0			14.3	
Approach LOS		F			E			F			B	

Intersection Summary			
HCM Average Control Delay	82.8	HCM Level of Service	F
HCM Volume to Capacity ratio	1.24		
Actuated Cycle Length (s)	150.0	Sum of lost time (s)	30.0
Intersection Capacity Utilization	107.2%	ICU Level of Service	G
Analysis Period (min)	15		
c Critical Lane Group			

Movement	EBL	EBT	EBR	WBL	WBT	WBR	NBL	NBT	NBR	SBL	SBT	SBR
Lane Configurations												
Volume (veh/h)	117	74	10	5	53	6	12	163	10	1	179	143
Sign Control		Free			Free			Stop			Stop	
Grade		0%			0%			0%			0%	
Peak Hour Factor	0.95	0.95	0.95	0.95	0.95	0.95	0.95	0.95	0.95	0.95	0.95	0.95
Hourly flow rate (vph)	123	78	11	5	56	6	13	172	11	1	188	151
Pedestrians												
Lane Width (ft)												
Walking Speed (ft/s)												
Percent Blockage												
Right turn flare (veh)												
Median type		None			None							
Median storage veh)												
Upstream signal (ft)		1018										
pX, platoon unblocked												
vC, conflicting volume	62			88			641	402	83	490	404	59
vC1, stage 1 conf vol												
vC2, stage 2 conf vol												
vCu, unblocked vol	62			88			641	402	83	490	404	59
tC, single (s)	4.1			4.1			7.1	6.5	6.2	7.1	6.5	6.2
tC, 2 stage (s)												
tF (s)	2.2			2.2			3.5	4.0	3.3	3.5	4.0	3.3
p0 queue free %	92			100			94	65	99	100	62	85
cM capacity (veh/h)	1541			1507			218	492	976	332	491	1007

Direction, Lane #	EB 1	EB 2	WB 1	WB 2	NB 1	NB 2	SB 1
Volume Total	123	88	5	62	13	182	340
Volume Left	123	0	5	0	13	0	1
Volume Right	0	11	0	6	0	11	151
cSH	1541	1700	1507	1700	218	507	634
Volume to Capacity	0.08	0.05	0.00	0.04	0.06	0.36	0.54
Queue Length 95th (ft)	7	0	0	0	5	40	80
Control Delay (s)	7.5	0.0	7.4	0.0	22.6	16.0	17.1
Lane LOS	A		A		C	C	C
Approach Delay (s)	4.4		0.6		16.5		17.1
Approach LOS					C		C

Intersection Summary			
Average Delay	12.3		
Intersection Capacity Utilization	38.8%	ICU Level of Service	A
Analysis Period (min)	15		

Movement	EBL	EBT	EBR	WBL	WBT	WBR	NBL	NBT	NBR	SBL	SBT	SBR
Lane Configurations												
Volume (vph)	89	751	108	84	550	39	128	3	138	58	34	183
Ideal Flow (vphpl)	1900	1900	1900	1900	1900	1900	1900	1900	1900	1900	1900	1900
Total Lost time (s)	6.0	6.0	6.0	6.0	6.0			6.0	6.0	6.0	6.0	
Lane Util. Factor	1.00	0.95	1.00	1.00	0.95			1.00	1.00	1.00	1.00	
Frt	1.00	1.00	0.85	1.00	0.99			1.00	0.85	1.00	0.87	
Flt Protected	0.95	1.00	1.00	0.95	1.00			0.95	1.00	0.95	1.00	
Satd. Flow (prot)	1770	3539	1583	1770	3504			1776	1583	1770	1627	
Flt Permitted	0.42	1.00	1.00	0.16	1.00			0.56	1.00	0.67	1.00	
Satd. Flow (perm)	777	3539	1583	293	3504			1044	1583	1246	1627	
Peak-hour factor, PHF	0.95	0.95	0.95	0.95	0.95	0.95	0.95	0.95	0.95	0.95	0.95	0.95
Adj. Flow (vph)	94	791	114	88	579	41	135	3	145	61	36	193
RTOR Reduction (vph)	0	0	80	0	8	0	0	0	90	0	120	0
Lane Group Flow (vph)	94	791	34	88	612	0	0	138	55	61	109	0
Turn Type	Perm		Perm	pm+pt			Perm		Perm	Perm		
Protected Phases		4		3	8			2			6	
Permitted Phases	4		4	8			2		2	6		
Actuated Green, G (s)	22.5	22.5	22.5	34.7	34.7			28.3	28.3	28.3	28.3	
Effective Green, g (s)	22.5	22.5	22.5	34.7	34.7			28.3	28.3	28.3	28.3	
Actuated g/C Ratio	0.30	0.30	0.30	0.46	0.46			0.38	0.38	0.38	0.38	
Clearance Time (s)	6.0	6.0	6.0	6.0	6.0			6.0	6.0	6.0	6.0	
Vehicle Extension (s)	3.0	3.0	3.0	3.0	3.0			3.0	3.0	3.0	3.0	
Lane Grp Cap (vph)	233	1062	475	258	1621			394	597	470	614	
v/s Ratio Prot		c0.22		0.03	c0.17						0.07	
v/s Ratio Perm	0.12		0.02	0.13				c0.13	0.03	0.05		
v/c Ratio	0.40	0.74	0.07	0.34	0.38			0.35	0.09	0.13	0.18	
Uniform Delay, d1	20.9	23.7	18.8	13.3	13.1			16.8	15.1	15.3	15.6	
Progression Factor	0.98	1.13	1.99	0.78	0.74			1.00	1.00	1.00	1.01	
Incremental Delay, d2	0.1	0.3	0.0	0.7	0.1			2.4	0.3	0.6	0.6	
Delay (s)	20.7	27.1	37.4	11.2	9.8			19.2	15.4	15.9	16.4	
Level of Service	C	C	D	B	A			B	B	B	B	
Approach Delay (s)		27.6			10.0			17.2			16.3	
Approach LOS		C			A			B			B	

Intersection Summary			
HCM Average Control Delay	19.4	HCM Level of Service	B
HCM Volume to Capacity ratio	0.53		
Actuated Cycle Length (s)	75.0	Sum of lost time (s)	18.0
Intersection Capacity Utilization	65.7%	ICU Level of Service	C
Analysis Period (min)	15		
c Critical Lane Group			

Movement	EBL	EBT	EBR	WBL	WBT	WBR	NBL	NBT	NBR	SBL	SBT	SBR
Lane Configurations												
Volume (vph)	151	7	128	172	3	473	130	2459	145	334	2365	75
Ideal Flow (vphpl)	1900	1900	1900	1900	1900	1900	1900	1900	1900	1900	1900	1900
Total Lost time (s)		6.0		6.0	6.0	6.0	6.0	6.0	6.0	6.0	6.0	6.0
Lane Util. Factor		0.95		1.00	1.00	1.00	1.00	0.91	1.00	1.00	0.91	1.00
Frt		0.93		1.00	1.00	0.85	1.00	1.00	0.85	1.00	1.00	0.85
Flt Protected		0.97		0.95	1.00	1.00	0.95	1.00	1.00	0.95	1.00	1.00
Satd. Flow (prot)		3216		1770	1863	1583	1770	5085	1583	1770	5085	1583
Flt Permitted		0.81		0.21	1.00	1.00	0.05	1.00	1.00	0.05	1.00	1.00
Satd. Flow (perm)		2683		383	1863	1583	98	5085	1583	91	5085	1583
Peak-hour factor, PHF	0.95	0.95	0.95	0.95	0.95	0.95	0.95	0.95	0.95	0.95	0.95	0.95
Adj. Flow (vph)	159	7	135	181	3	498	137	2588	153	352	2489	79
RTOR Reduction (vph)	0	99	0	0	0	167	0	0	42	0	0	22
Lane Group Flow (vph)	0	202	0	181	3	331	137	2588	111	352	2489	57
Turn Type	Perm			pm+pt		Perm	pm+pt		Perm	pm+pt		Perm
Protected Phases		4		3	8		5	2		1	6	
Permitted Phases	4			8		8	2		2	6		6
Actuated Green, G (s)		14.5		30.5	30.5	30.5	86.5	76.0	76.0	107.5	91.0	91.0
Effective Green, g (s)		14.5		30.5	30.5	30.5	86.5	76.0	76.0	107.5	91.0	91.0
Actuated g/C Ratio		0.10		0.20	0.20	0.20	0.58	0.51	0.51	0.72	0.61	0.61
Clearance Time (s)		6.0		6.0	6.0	6.0	6.0	6.0	6.0	6.0	6.0	6.0
Vehicle Extension (s)		3.0		3.0	3.0	3.0	3.0	3.0	3.0	3.0	3.0	3.0
Lane Grp Cap (vph)		259		170	379	322	174	2576	802	351	3085	960
v/s Ratio Prot				0.07	0.00		0.06	0.51		c0.17	0.49	
v/s Ratio Perm		0.08		c0.15		c0.21	0.40		0.07	c0.55		0.04
v/c Ratio		0.78		1.06	0.01	1.03	0.79	1.00	0.14	1.00	0.81	0.06
Uniform Delay, d1		66.2		56.2	47.7	59.8	37.3	37.0	19.6	64.5	22.7	12.0
Progression Factor		1.20		1.00	1.00	1.00	1.22	0.51	0.31	1.69	0.72	0.00
Incremental Delay, d2		12.3		87.3	0.0	57.3	13.5	15.0	0.2	15.1	0.2	0.0
Delay (s)		92.0		143.4	47.7	117.0	58.9	33.8	6.2	123.9	16.6	0.0
Level of Service		F		F	D	F	E	C	A	F	B	A
Approach Delay (s)		92.0			123.7			33.6			29.1	
Approach LOS		F			F			C			C	

Intersection Summary			
HCM Average Control Delay	43.3	HCM Level of Service	D
HCM Volume to Capacity ratio	0.99		
Actuated Cycle Length (s)	150.0	Sum of lost time (s)	12.0
Intersection Capacity Utilization	104.2%	ICU Level of Service	G
Analysis Period (min)	15		
c Critical Lane Group			

Movement	NBL	NBT	NBR2	SBL	SBT	SBR2	NEL	NER2	SWL	SWR2
Lane Configurations										
Volume (vph)	422	301	604	90	236	27	11	322	446	85
Ideal Flow (vphpl)	1900	1900	1900	1900	1900	1900	1900	1900	1900	1900
Total Lost time (s)	6.0	6.0	6.0	6.0	6.0	6.0	6.0	6.0	6.0	6.0
Lane Util. Factor	0.97	0.95	1.00	0.97	0.95	1.00	0.97	1.00	0.97	1.00
Frt	1.00	1.00	0.85	1.00	1.00	0.85	1.00	0.85	1.00	0.85
Flt Protected	0.95	1.00	1.00	0.95	1.00	1.00	0.95	1.00	0.95	1.00
Satd. Flow (prot)	3433	3539	1583	3433	3539	1583	3433	1583	3433	1583
Flt Permitted	0.95	1.00	1.00	0.95	1.00	1.00	0.95	1.00	0.95	1.00
Satd. Flow (perm)	3433	3539	1583	3433	3539	1583	3433	1583	3433	1583
Peak-hour factor, PHF	0.95	0.95	0.95	0.95	0.95	0.95	0.95	0.95	0.95	0.95
Adj. Flow (vph)	444	317	636	95	248	28	12	339	469	89
RTOR Reduction (vph)	0	0	322	0	0	17	0	172	0	55
Lane Group Flow (vph)	444	317	314	95	248	11	12	167	469	34
Turn Type	Prot		Perm	Prot		Perm	Prot	custom	Prot	custom
Protected Phases	5	2		1	6		4		8	
Permitted Phases			2			6		2		6
Actuated Green, G (s)	35.0	74.0	74.0	18.0	57.0	57.0	40.0	74.0	40.0	57.0
Effective Green, g (s)	35.0	74.0	74.0	18.0	57.0	57.0	40.0	74.0	40.0	57.0
Actuated g/C Ratio	0.23	0.49	0.49	0.12	0.38	0.38	0.27	0.49	0.27	0.38
Clearance Time (s)	6.0	6.0	6.0	6.0	6.0	6.0	6.0	6.0	6.0	6.0
Vehicle Extension (s)	3.0	3.0	3.0	3.0	3.0	3.0	3.0	3.0	3.0	3.0
Lane Grp Cap (vph)	801	1746	781	412	1345	602	915	781	915	602
v/s Ratio Prot	c0.13	0.09		0.03	0.07		0.00		c0.14	
v/s Ratio Perm			c0.20			0.01		0.11		0.02
v/c Ratio	0.55	0.18	0.40	0.23	0.18	0.02	0.01	0.21	0.51	0.06
Uniform Delay, d1	50.6	21.1	24.0	59.7	31.0	29.0	40.5	21.5	46.7	29.5
Progression Factor	1.23	0.55	0.93	1.00	1.00	1.00	0.78	1.49	1.00	1.00
Incremental Delay, d2	2.3	0.2	1.3	1.3	0.3	0.1	0.0	0.2	2.0	0.2
Delay (s)	64.8	11.8	23.6	61.0	31.3	29.1	31.5	32.2	48.8	29.6
Level of Service	E	B	C	E	C	C	C	C	D	C
Approach Delay (s)		34.0			38.8					
Approach LOS		C			D					

Intersection Summary			
HCM Average Control Delay	36.9	HCM Level of Service	D
HCM Volume to Capacity ratio	0.46		
Actuated Cycle Length (s)	150.0	Sum of lost time (s)	12.0
Intersection Capacity Utilization	52.5%	ICU Level of Service	A
Analysis Period (min)	15		
c Critical Lane Group			

HCM Signalized Intersection Capacity Analysis
1: Rollins Ave & MD 355

4/4/2014

Movement	EBL	EBT	EBR	WBL	WBT	WBR	NBL	NBT	NBR	SBL	SBT	SBR
Lane Configurations												
Volume (vph)	0	364	81	0	289	137	106	2324	228	172	2614	68
Ideal Flow (vphpl)	1900	1900	1900	1900	1900	1900	1900	1900	1900	1900	1900	1900
Total Lost time (s)		6.0			6.0		6.0	6.0	6.0	6.0	6.0	
Lane Util. Factor		0.95			0.95		1.00	0.91	1.00	1.00	0.91	
Frt		0.97			0.95		1.00	1.00	0.85	1.00	1.00	
Flt Protected		1.00			1.00		0.95	1.00	1.00	0.95	1.00	
Satd. Flow (prot)		3443			3369		1770	5085	1583	1770	5066	
Flt Permitted		1.00			1.00		0.04	1.00	1.00	0.04	1.00	
Satd. Flow (perm)		3443			3369		80	5085	1583	75	5066	
Peak-hour factor, PHF	0.95	0.95	0.95	0.95	0.95	0.95	0.95	0.95	0.95	0.95	0.95	0.95
Adj. Flow (vph)	0	383	85	0	304	144	112	2446	240	181	2752	72
RTOR Reduction (vph)	0	13	0	0	38	0	0	0	47	0	2	0
Lane Group Flow (vph)	0	455	0	0	410	0	112	2446	193	181	2822	0
Turn Type							pm+pt		Perm	pm+pt		
Protected Phases		4			8		5	2		1	6	
Permitted Phases							2		2	6		
Actuated Green, G (s)		23.4			23.4		102.2	92.8	92.8	114.6	99.2	
Effective Green, g (s)		23.4			23.4		102.2	92.8	92.8	114.6	99.2	
Actuated g/C Ratio		0.16			0.16		0.68	0.62	0.62	0.76	0.66	
Clearance Time (s)		6.0			6.0		6.0	6.0	6.0	6.0	6.0	
Vehicle Extension (s)		3.0			3.0		3.0	3.0	3.0	3.0	3.0	
Lane Grp Cap (vph)		537			526		160	3146	979	236	3350	
v/s Ratio Prot		c0.13			0.12		0.04	0.48		c0.08	c0.56	
v/s Ratio Perm							0.43		0.12	0.50		
v/c Ratio		0.85			0.78		0.70	0.78	0.20	0.77	0.84	
Uniform Delay, d1		61.6			60.8		37.8	21.0	12.4	47.8	19.4	
Progression Factor		1.00			1.00		1.42	0.06	0.00	1.00	1.00	
Incremental Delay, d2		11.9			7.2		1.2	0.2	0.0	13.8	2.8	
Delay (s)		73.4			68.0		54.8	1.5	0.0	61.7	22.2	
Level of Service		E			E		D	A	A	E	C	
Approach Delay (s)		73.4			68.0			3.5			24.6	
Approach LOS		E			E			A			C	

Intersection Summary			
HCM Average Control Delay	22.1	HCM Level of Service	C
HCM Volume to Capacity ratio	0.86		
Actuated Cycle Length (s)	150.0	Sum of lost time (s)	18.0
Intersection Capacity Utilization	85.5%	ICU Level of Service	E
Analysis Period (min)	15		
c Critical Lane Group			

Movement	EBL	EBT	EBR	WBL	WBT	WBR	NBL	NBT	NBR	SBL	SBT	SBR
Lane Configurations												
Volume (vph)	44	24	76	585	19	133	91	2723	300	184	2594	12
Ideal Flow (vphpl)	1900	1900	1900	1900	1900	1900	1900	1900	1900	1900	1900	1900
Total Lost time (s)		6.0	6.0	6.0	6.0		6.0	6.0	6.0	6.0	6.0	
Lane Util. Factor		1.00	1.00	0.97	1.00		1.00	0.91	1.00	1.00	0.91	
Frt		1.00	0.85	1.00	0.87		1.00	1.00	0.85	1.00	1.00	
Flt Protected		0.97	1.00	0.95	1.00		0.95	1.00	1.00	0.95	1.00	
Satd. Flow (prot)		1804	1583	3433	1618		1770	5085	1583	1770	5082	
Flt Permitted		0.97	1.00	0.95	1.00		0.95	1.00	1.00	0.05	1.00	
Satd. Flow (perm)		1804	1583	3433	1618		1770	5085	1583	94	5082	
Peak-hour factor, PHF	0.95	0.95	0.95	0.95	0.95	0.95	0.95	0.95	0.95	0.95	0.95	0.95
Adj. Flow (vph)	46	25	80	616	20	140	96	2866	316	194	2731	13
RTOR Reduction (vph)	0	0	74	0	115	0	0	0	80	0	0	0
Lane Group Flow (vph)	0	71	6	616	45	0	96	2866	236	194	2744	0
Turn Type	Split		Perm	Split			Prot		Perm	pm+pt		
Protected Phases	4	4		8	8		5	2		1	6	
Permitted Phases			4						2	6		
Actuated Green, G (s)		11.9	11.9	27.1	27.1		8.0	78.0	78.0	88.0	79.0	
Effective Green, g (s)		11.9	11.9	27.1	27.1		8.0	78.0	78.0	88.0	79.0	
Actuated g/C Ratio		0.08	0.08	0.18	0.18		0.05	0.52	0.52	0.59	0.53	
Clearance Time (s)		6.0	6.0	6.0	6.0		6.0	6.0	6.0	6.0	6.0	
Vehicle Extension (s)		3.0	3.0	3.0	3.0		3.0	3.0	3.0	3.0	3.0	
Lane Grp Cap (vph)		143	126	620	292		94	2644	823	156	2677	
v/s Ratio Prot		c0.04		c0.18	0.03		0.05	0.56		c0.07	0.54	
v/s Ratio Perm			0.00						0.15	c0.65		
v/c Ratio		0.50	0.05	0.99	0.16		1.02	1.08	0.29	1.24	1.02	
Uniform Delay, d1		66.2	63.8	61.4	51.8		71.0	36.0	20.3	72.7	35.5	
Progression Factor		1.00	1.00	1.00	1.00		1.27	0.38	0.26	1.49	0.64	
Incremental Delay, d2		2.7	0.2	34.3	0.2		65.9	41.2	0.4	136.0	19.8	
Delay (s)		68.9	64.0	95.7	52.0		156.3	54.8	5.7	244.0	42.6	
Level of Service		E	E	F	D		F	D	A	F	D	
Approach Delay (s)		66.3			86.7			53.1			55.9	
Approach LOS		E			F			D			E	

Intersection Summary			
HCM Average Control Delay	58.2	HCM Level of Service	E
HCM Volume to Capacity ratio	1.08		
Actuated Cycle Length (s)	150.0	Sum of lost time (s)	18.0
Intersection Capacity Utilization	103.2%	ICU Level of Service	G
Analysis Period (min)	15		
c Critical Lane Group			

Movement	EBL	EBT	EBR	WBL	WBT	WBR	NBL	NBT	NBR	SBL	SBT	SBR
Lane Configurations												
Volume (vph)	33	9	34	260	8	170	52	2979	327	146	3280	19
Ideal Flow (vphpl)	1900	1900	1900	1900	1900	1900	1900	1900	1900	1900	1900	1900
Total Lost time (s)	6.0	6.0		6.0	6.0		6.0	6.0		6.0	6.0	
Lane Util. Factor	1.00	1.00		1.00	1.00		1.00	0.86		1.00	0.91	
Frt	1.00	0.88		1.00	0.86		1.00	0.99		1.00	1.00	
Flt Protected	0.95	1.00		0.95	1.00		0.95	1.00		0.95	1.00	
Satd. Flow (prot)	1770	1639		1770	1595		1770	6313		1770	5081	
Flt Permitted	0.46	1.00		0.73	1.00		0.95	1.00		0.95	1.00	
Satd. Flow (perm)	862	1639		1356	1595		1770	6313		1770	5081	
Peak-hour factor, PHF	0.95	0.95	0.95	0.95	0.95	0.95	0.95	0.95	0.95	0.95	0.95	0.95
Adj. Flow (vph)	35	9	36	274	8	179	55	3136	344	154	3453	20
RTOR Reduction (vph)	0	29	0	0	73	0	0	12	0	0	0	0
Lane Group Flow (vph)	35	16	0	274	114	0	55	3468	0	154	3473	0
Turn Type	Perm			Perm			Prot			Prot		
Protected Phases		4			8		5	2		1	6	
Permitted Phases	4			8								
Actuated Green, G (s)	29.0	29.0		29.0	29.0		5.0	89.0		14.0	98.0	
Effective Green, g (s)	29.0	29.0		29.0	29.0		5.0	89.0		14.0	98.0	
Actuated g/C Ratio	0.19	0.19		0.19	0.19		0.03	0.59		0.09	0.65	
Clearance Time (s)	6.0	6.0		6.0	6.0		6.0	6.0		6.0	6.0	
Vehicle Extension (s)	3.0	3.0		3.0	3.0		3.0	3.0		3.0	3.0	
Lane Grp Cap (vph)	167	317		262	308		59	3746		165	3320	
v/s Ratio Prot		0.01			0.07		0.03	0.55		c0.09	c0.68	
v/s Ratio Perm	0.04			c0.20								
v/c Ratio	0.21	0.05		1.05	0.37		0.93	0.93		0.93	1.05	
Uniform Delay, d1	50.9	49.3		60.5	52.6		72.3	27.5		67.5	26.0	
Progression Factor	1.00	1.00		1.00	1.00		1.05	0.51		1.07	0.25	
Incremental Delay, d2	0.6	0.1		68.1	0.7		79.0	4.1		24.4	24.1	
Delay (s)	51.5	49.3		128.6	53.3		154.8	18.1		96.8	30.7	
Level of Service	D	D		F	D		F	B		F	C	
Approach Delay (s)		50.3			98.1			20.2			33.5	
Approach LOS		D			F			C			C	

Intersection Summary			
HCM Average Control Delay	31.4	HCM Level of Service	C
HCM Volume to Capacity ratio	1.07		
Actuated Cycle Length (s)	150.0	Sum of lost time (s)	18.0
Intersection Capacity Utilization	104.9%	ICU Level of Service	G
Analysis Period (min)	15		
c Critical Lane Group			

Intersection Sign configuration not allowed in HCM analysis.

Movement	EBL	EBT	EBR	WBL	WBT	WBR	NBL	NBT	NBR	SBL	SBT	SBR
Lane Configurations												
Volume (vph)	512	777	0	0	936	236	9	0	347	0	0	0
Ideal Flow (vphpl)	1900	1900	1900	1900	1900	1900	1900	1900	1900	1900	1900	1900
Lane Width	11	11	11	11	11	11	11	11	11	11	11	11
Total Lost time (s)	6.0	6.0			6.0	6.0		6.0	6.0			
Lane Util. Factor	0.97	0.95			0.95	1.00		1.00	0.88			
Frt	1.00	1.00			1.00	0.85		1.00	0.85			
Flt Protected	0.95	1.00			1.00	1.00		0.95	1.00			
Satd. Flow (prot)	3319	3421			3421	1531		1711	2694			
Flt Permitted	0.95	1.00			1.00	1.00		0.95	1.00			
Satd. Flow (perm)	3319	3421			3421	1531		1711	2694			
Peak-hour factor, PHF	0.95	0.95	0.95	0.95	0.95	0.95	0.95	0.95	0.95	0.95	0.95	0.95
Adj. Flow (vph)	539	818	0	0	985	248	9	0	365	0	0	0
RTOR Reduction (vph)	0	0	0	0	0	104	0	0	346	0	0	0
Lane Group Flow (vph)	539	818	0	0	985	144	0	9	19	0	0	0
Turn Type	Prot					Perm	Perm		Perm			
Protected Phases	1	6			2			4				
Permitted Phases						2	4		4			
Actuated Green, G (s)	41.0	130.2			83.2	83.2		7.8	7.8			
Effective Green, g (s)	41.0	130.2			83.2	83.2		7.8	7.8			
Actuated g/C Ratio	0.27	0.87			0.55	0.55		0.05	0.05			
Clearance Time (s)	6.0	6.0			6.0	6.0		6.0	6.0			
Vehicle Extension (s)	3.0	3.0			3.0	3.0		3.0	3.0			
Lane Grp Cap (vph)	907	2969			1898	849		89	140			
v/s Ratio Prot	c0.16	0.24			c0.29							
v/s Ratio Perm						0.09		0.01	c0.01			
v/c Ratio	0.59	0.28			0.52	0.17		0.10	0.14			
Uniform Delay, d1	47.3	1.7			20.9	16.4		67.8	67.9			
Progression Factor	0.86	0.89			0.14	0.00		0.93	1.68			
Incremental Delay, d2	0.3	0.1			0.6	0.3		0.3	0.3			
Delay (s)	40.8	1.6			3.5	0.3		63.5	114.0			
Level of Service	D	A			A	A		E	F			
Approach Delay (s)		17.2			2.8			112.8			0.0	
Approach LOS		B			A			F			A	

Intersection Summary			
HCM Average Control Delay	23.3	HCM Level of Service	C
HCM Volume to Capacity ratio	0.52		
Actuated Cycle Length (s)	150.0	Sum of lost time (s)	18.0
Intersection Capacity Utilization	58.8%	ICU Level of Service	B
Analysis Period (min)	15		

c Critical Lane Group

Movement	EBL	EBT	EBR	WBL	WBT	WBR	NBL	NBT	NBR	SBL	SBT	SBR
Lane Configurations												
Volume (vph)	257	36	203	58	152	86	195	2278	9	79	2324	95
Ideal Flow (vphpl)	1900	1900	1900	1900	1900	1900	1900	1900	1900	1900	1900	1900
Total Lost time (s)	6.0	6.0	6.0	6.0	6.0	6.0	6.0	6.0		6.0	6.0	6.0
Lane Util. Factor	*1.00	*1.00	1.00	1.00	1.00	1.00	1.00	0.91		1.00	0.91	1.00
Frt	1.00	1.00	0.85	1.00	1.00	0.85	1.00	1.00		1.00	1.00	0.85
Flt Protected	0.95	0.97	1.00	0.95	1.00	1.00	0.95	1.00		0.95	1.00	1.00
Satd. Flow (prot)	3539	1806	1583	1770	1863	1583	1770	5082		1770	5085	1583
Flt Permitted	0.95	0.97	1.00	0.95	1.00	1.00	0.05	1.00		0.06	1.00	1.00
Satd. Flow (perm)	3539	1806	1583	1770	1863	1583	96	5082		104	5085	1583
Peak-hour factor, PHF	0.95	0.95	0.95	0.95	0.95	0.95	0.95	0.95	0.95	0.95	0.95	0.95
Adj. Flow (vph)	271	38	214	61	160	91	205	2398	9	83	2446	100
RTOR Reduction (vph)	0	0	186	0	0	78	0	0	0	0	0	28
Lane Group Flow (vph)	206	103	28	61	160	13	205	2407	0	83	2446	72
Turn Type	Split		Perm	Split		Perm	pm+pt			pm+pt		Perm
Protected Phases	4	4		8	8		5	2		1	6	
Permitted Phases			4			8	2			6		6
Actuated Green, G (s)	14.9	14.9	14.9	18.1	18.1	18.1	99.0	84.6		80.0	71.6	71.6
Effective Green, g (s)	14.9	14.9	14.9	18.1	18.1	18.1	99.0	84.6		80.0	71.6	71.6
Actuated g/C Ratio	0.10	0.10	0.10	0.12	0.12	0.12	0.66	0.56		0.53	0.48	0.48
Clearance Time (s)	6.0	6.0	6.0	6.0	6.0	6.0	6.0	6.0		6.0	6.0	6.0
Vehicle Extension (s)	3.0	3.0	3.0	3.0	3.0	3.0	3.0	3.0		3.0	3.0	3.0
Lane Grp Cap (vph)	352	179	157	214	225	191	302	2866		149	2427	756
v/s Ratio Prot	c0.06	0.06		0.03	c0.09		c0.10	c0.47		0.03	c0.48	
v/s Ratio Perm			0.02			0.01	0.35			0.27		0.05
v/c Ratio	0.59	0.58	0.18	0.29	0.71	0.07	0.68	0.84		0.56	1.01	0.09
Uniform Delay, d1	64.6	64.5	62.0	60.1	63.4	58.5	46.5	27.1		26.4	39.2	21.5
Progression Factor	1.26	1.24	2.50	1.00	1.00	0.95	1.75	0.52		1.69	0.55	0.31
Incremental Delay, d2	2.3	4.1	0.5	0.7	10.1	0.1	3.4	1.8		3.3	17.6	0.2
Delay (s)	83.4	84.0	155.5	60.5	73.7	55.9	84.8	15.8		47.8	39.1	6.9
Level of Service	F	F	F	E	E	E	F	B		D	D	A
Approach Delay (s)		113.0			65.9			21.2			38.1	
Approach LOS		F			E			C			D	

Intersection Summary			
HCM Average Control Delay	38.7	HCM Level of Service	D
HCM Volume to Capacity ratio	0.92		
Actuated Cycle Length (s)	150.0	Sum of lost time (s)	30.0
Intersection Capacity Utilization	89.1%	ICU Level of Service	E
Analysis Period (min)	15		
c Critical Lane Group			

Movement	EBL	EBT	EBR	WBL	WBT	WBR	NBL	NBT	NBR	SBL	SBT	SBR
Lane Configurations												
Volume (vph)	143	72	63	86	14	6	91	2720	108	60	2447	73
Ideal Flow (vphpl)	1900	1900	1900	1900	1900	1900	1900	1900	1900	1900	1900	1900
Total Lost time (s)	6.0	6.0		6.0	6.0	6.0	6.0	6.0	6.0	6.0	6.0	6.0
Lane Util. Factor	1.00	0.95		1.00	0.95	1.00	1.00	0.91	1.00	1.00	0.91	1.00
Frt	1.00	0.93		1.00	1.00	0.85	1.00	1.00	0.85	1.00	1.00	0.85
Flt Protected	0.95	1.00		0.95	1.00	1.00	0.95	1.00	1.00	0.95	1.00	1.00
Satd. Flow (prot)	1770	3292		1770	3539	1583	1770	5085	1583	1770	5085	1583
Flt Permitted	0.42	1.00		0.66	1.00	1.00	0.04	1.00	1.00	0.04	1.00	1.00
Satd. Flow (perm)	776	3292		1233	3539	1583	74	5085	1583	76	5085	1583
Peak-hour factor, PHF	0.95	0.95	0.95	0.95	0.95	0.95	0.95	0.95	0.95	0.95	0.95	0.95
Adj. Flow (vph)	151	76	66	91	15	6	96	2863	114	63	2576	77
RTOR Reduction (vph)	0	61	0	0	0	6	0	0	37	0	0	22
Lane Group Flow (vph)	151	81	0	91	15	0	96	2863	77	63	2576	55
Turn Type	pm+pt			pm+pt		Perm	pm+pt		Perm	pm+pt		Perm
Protected Phases	7	4		3	8		5	2		1	6	
Permitted Phases	4			8		8	2		2	6		6
Actuated Green, G (s)	23.3	11.3		13.3	6.3	6.3	111.2	101.0	101.0	104.2	97.5	97.5
Effective Green, g (s)	23.3	11.3		13.3	6.3	6.3	111.2	101.0	101.0	104.2	97.5	97.5
Actuated g/C Ratio	0.16	0.08		0.09	0.04	0.04	0.74	0.67	0.67	0.69	0.65	0.65
Clearance Time (s)	6.0	6.0		6.0	6.0	6.0	6.0	6.0	6.0	6.0	6.0	6.0
Vehicle Extension (s)	3.0	3.0		3.0	3.0	3.0	3.0	3.0	3.0	3.0	3.0	3.0
Lane Grp Cap (vph)	200	248		134	149	66	170	3424	1066	128	3305	1029
v/s Ratio Prot	c0.06	0.02		0.03	0.00		c0.04	c0.56		0.02	0.51	
v/s Ratio Perm	c0.06			0.03		0.00	0.38		0.05	0.32		0.03
v/c Ratio	0.76	0.33		0.68	0.10	0.00	0.56	0.84	0.07	0.49	0.78	0.05
Uniform Delay, d1	58.6	65.7		65.7	69.1	68.8	34.0	18.3	8.4	24.4	18.6	9.5
Progression Factor	1.06	1.09		1.02	1.02	1.04	1.42	1.06	0.02	1.65	0.14	0.02
Incremental Delay, d2	14.9	0.8		12.8	0.3	0.0	0.4	0.2	0.0	1.9	1.2	0.1
Delay (s)	76.8	72.2		79.6	70.5	71.7	48.7	19.6	0.2	42.2	3.8	0.2
Level of Service	E	E		E	E	E	D	B	A	D	A	A
Approach Delay (s)		74.6			77.9			19.8			4.6	
Approach LOS		E			E			B			A	

Intersection Summary			
HCM Average Control Delay	16.8	HCM Level of Service	B
HCM Volume to Capacity ratio	0.85		
Actuated Cycle Length (s)	150.0	Sum of lost time (s)	24.0
Intersection Capacity Utilization	87.1%	ICU Level of Service	E
Analysis Period (min)	15		
c Critical Lane Group			

Movement	EBL	EBT	EBR	WBL	WBT	WBR	NBL	NBT	NBR	SBL	SBT	SBR
Lane Configurations												
Volume (vph)	157	430	113	430	482	260	96	2200	374	249	2124	102
Ideal Flow (vphpl)	1900	1900	1900	1900	1900	1900	1900	1900	1900	1900	1900	1900
Total Lost time (s)		6.0	6.0	6.0	6.0	6.0	6.0	6.0	6.0	6.0	6.0	6.0
Lane Util. Factor		0.95	1.00	0.97	0.95	1.00	1.00	0.91	1.00	1.00	0.91	1.00
Frt		1.00	0.85	1.00	1.00	0.85	1.00	1.00	0.85	1.00	1.00	0.85
Flt Protected		0.99	1.00	0.95	1.00	1.00	0.95	1.00	1.00	0.95	1.00	1.00
Satd. Flow (prot)		3493	1583	3433	3539	1583	1770	5085	1583	1770	5085	1583
Flt Permitted		0.70	1.00	0.19	1.00	1.00	0.95	1.00	1.00	0.07	1.00	1.00
Satd. Flow (perm)		2468	1583	698	3539	1583	1770	5085	1583	122	5085	1583
Peak-hour factor, PHF	0.95	0.95	0.95	0.95	0.95	0.95	0.95	0.95	0.95	0.95	0.95	0.95
Adj. Flow (vph)	165	453	119	453	507	274	101	2316	394	262	2236	107
RTOR Reduction (vph)	0	0	72	0	0	69	0	0	123	0	0	34
Lane Group Flow (vph)	0	618	47	453	507	205	101	2316	271	262	2236	73
Turn Type	Perm		Perm	pm+pt		Perm	Prot		Perm	pm+pt		Perm
Protected Phases		4		3	8		5	2		1	6	
Permitted Phases	4		4	8		8			2	6		6
Actuated Green, G (s)		39.4	39.4	64.0	64.0	64.0	7.0	56.0	56.0	73.0	61.0	61.0
Effective Green, g (s)		39.4	39.4	64.0	64.0	64.0	7.0	56.0	56.0	73.0	61.0	61.0
Actuated g/C Ratio		0.26	0.26	0.43	0.43	0.43	0.05	0.37	0.37	0.49	0.41	0.41
Clearance Time (s)		6.0	6.0	6.0	6.0	6.0	6.0	6.0	6.0	6.0	6.0	6.0
Vehicle Extension (s)		3.0	3.0	3.0	3.0	3.0	3.0	3.0	3.0	3.0	3.0	3.0
Lane Grp Cap (vph)		648	416	637	1510	675	83	1898	591	191	2068	644
v/s Ratio Prot				c0.09	0.14		0.06	0.46		c0.11	c0.44	
v/s Ratio Perm		c0.25	0.03	0.22		0.13			0.17	c0.56		0.05
v/c Ratio		0.95	0.11	0.71	0.34	0.30	1.22	1.22	0.46	1.37	1.08	0.11
Uniform Delay, d1		54.4	42.0	31.2	28.8	28.3	71.5	47.0	35.5	71.2	44.5	27.7
Progression Factor		0.81	1.18	0.85	0.77	0.83	1.15	0.70	0.43	1.54	0.72	0.75
Incremental Delay, d2		22.3	0.1	3.5	0.1	0.2	128.8	100.9	0.9	187.9	43.1	0.2
Delay (s)		66.5	49.7	30.0	22.3	23.8	210.9	133.9	16.1	297.1	75.1	21.0
Level of Service		E	D	C	C	C	F	F	B	F	E	C
Approach Delay (s)		63.8			25.5			120.2			95.2	
Approach LOS		E			C			F			F	

Intersection Summary			
HCM Average Control Delay	89.9	HCM Level of Service	F
HCM Volume to Capacity ratio	1.18		
Actuated Cycle Length (s)	150.0	Sum of lost time (s)	24.0
Intersection Capacity Utilization	106.1%	ICU Level of Service	G
Analysis Period (min)	15		
c Critical Lane Group			

Movement	EBL	EBT	EBR	WBL	WBT	WBR	NBL	NBT	NBR	SBL	SBT	SBR
Lane Configurations												
Volume (vph)	31	33	48	50	0	50	159	2682	125	204	2613	28
Ideal Flow (vphpl)	1900	1900	1900	1900	1900	1900	1900	1900	1900	1900	1900	1900
Total Lost time (s)	6.0	6.0		6.0	6.0		6.0	6.0		6.0	6.0	6.0
Lane Util. Factor	1.00	1.00		1.00	1.00		1.00	0.86		1.00	0.91	1.00
Frt	1.00	0.91		1.00	0.85		1.00	0.99		1.00	1.00	0.85
Flt Protected	0.95	1.00		0.95	1.00		0.95	1.00		0.95	1.00	1.00
Satd. Flow (prot)	1770	1697		1770	1583		1770	6365		1770	5085	1583
Flt Permitted	0.58	1.00		0.70	1.00		0.05	1.00		0.95	1.00	1.00
Satd. Flow (perm)	1083	1697		1306	1583		85	6365		1770	5085	1583
Peak-hour factor, PHF	0.95	0.95	0.95	0.95	0.95	0.95	0.95	0.95	0.95	0.95	0.95	0.95
Adj. Flow (vph)	33	35	51	53	0	53	167	2823	132	215	2751	29
RTOR Reduction (vph)	0	38	0	0	50	0	0	4	0	0	0	6
Lane Group Flow (vph)	33	48	0	53	3	0	167	2951	0	215	2751	23
Turn Type	pm+pt			pm+pt			pm+pt			Prot		Perm
Protected Phases	7	4		3	8		5	2		1	6	
Permitted Phases	4			8			2					6
Actuated Green, G (s)	17.9	12.3		13.1	9.9		101.9	87.8		22.7	96.4	96.4
Effective Green, g (s)	17.9	12.3		13.1	9.9		101.9	87.8		22.7	96.4	96.4
Actuated g/C Ratio	0.12	0.08		0.09	0.07		0.68	0.59		0.15	0.64	0.64
Clearance Time (s)	6.0	6.0		6.0	6.0		6.0	6.0		6.0	6.0	6.0
Vehicle Extension (s)	3.0	3.0		3.0	3.0		3.0	3.0		3.0	3.0	3.0
Lane Grp Cap (vph)	155	139		124	104		216	3726		268	3268	1017
v/s Ratio Prot	0.01	c0.03		c0.01	0.00		0.07	0.46		c0.12	c0.54	
v/s Ratio Perm	0.02			0.03			0.45					0.01
v/c Ratio	0.21	0.35		0.43	0.03		0.77	0.79		0.80	0.84	0.02
Uniform Delay, d1	59.3	65.1		64.4	65.6		45.1	24.0		61.5	20.9	9.7
Progression Factor	1.00	1.00		1.00	1.00		1.34	0.31		1.24	0.27	0.06
Incremental Delay, d2	0.7	1.5		2.4	0.1		8.2	0.9		5.4	0.9	0.0
Delay (s)	60.0	66.6		66.8	65.7		68.5	8.3		81.7	6.6	0.6
Level of Service	E	E		E	E		E	A		F	A	A
Approach Delay (s)		64.7			66.3			11.5			11.9	
Approach LOS		E			E			B			B	

Intersection Summary			
HCM Average Control Delay	13.6	HCM Level of Service	B
HCM Volume to Capacity ratio	0.76		
Actuated Cycle Length (s)	150.0	Sum of lost time (s)	18.0
Intersection Capacity Utilization	83.7%	ICU Level of Service	E
Analysis Period (min)	15		
c Critical Lane Group			

Movement	EBL	EBT	EBR	WBL	WBT	WBR	NBL	NBT	NBR	SBL	SBT	SBR
Lane Configurations												
Volume (vph)	79	50	183	250	50	92	101	2756	321	20	2641	39
Ideal Flow (vphpl)	1900	1900	1900	1900	1900	1900	1900	1900	1900	1900	1900	1900
Total Lost time (s)		6.0	6.0	6.0	6.0	6.0	6.0	6.0	6.0	6.0	6.0	
Lane Util. Factor		0.95	1.00	0.95	0.95	1.00	1.00	0.91	1.00	1.00	0.91	
Frt		1.00	0.85	1.00	1.00	0.85	1.00	1.00	0.85	1.00	1.00	
Flt Protected		0.97	1.00	0.95	0.97	1.00	0.95	1.00	1.00	0.95	1.00	
Satd. Flow (prot)		3434	1583	1681	1713	1583	1770	5085	1583	1770	5074	
Flt Permitted		0.97	1.00	0.95	0.97	1.00	0.04	1.00	1.00	0.05	1.00	
Satd. Flow (perm)		3434	1583	1681	1713	1583	80	5085	1583	85	5074	
Peak-hour factor, PHF	0.95	0.95	0.95	0.95	0.95	0.95	0.95	0.95	0.95	0.95	0.95	0.95
Adj. Flow (vph)	83	53	193	263	53	97	106	2901	338	21	2780	41
RTOR Reduction (vph)	0	0	0	0	0	86	0	0	118	0	1	0
Lane Group Flow (vph)	0	136	193	158	158	11	106	2901	220	21	2820	0
Turn Type	Split		pm+ov	Split		Perm	pm+pt		Perm	pm+pt		
Protected Phases	4	4	5	8	8		5	2		1	6	
Permitted Phases			4			8	2		2	6		
Actuated Green, G (s)		12.3	20.9	17.2	17.2	17.2	101.2	92.6	92.6	91.8	87.9	
Effective Green, g (s)		12.3	20.9	17.2	17.2	17.2	101.2	92.6	92.6	91.8	87.9	
Actuated g/C Ratio		0.08	0.14	0.11	0.11	0.11	0.67	0.62	0.62	0.61	0.59	
Clearance Time (s)		6.0	6.0	6.0	6.0	6.0	6.0	6.0	6.0	6.0	6.0	
Vehicle Extension (s)		3.0	3.0	3.0	3.0	3.0	3.0	3.0	3.0	3.0	3.0	
Lane Grp Cap (vph)		282	221	193	196	182	151	3139	977	96	2973	
v/s Ratio Prot		0.04	c0.05	c0.09	0.09		0.04	c0.57		0.01	0.56	
v/s Ratio Perm			0.07			0.01	0.43		0.14	0.13		
v/c Ratio		0.48	0.87	0.82	0.81	0.06	0.70	0.92	0.22	0.22	0.95	
Uniform Delay, d1		65.8	63.3	64.9	64.8	59.2	42.5	25.6	12.8	29.5	28.9	
Progression Factor		1.14	0.99	1.00	1.00	1.00	1.73	0.15	0.01	0.83	0.46	
Incremental Delay, d2		1.3	28.6	22.9	20.9	0.1	1.4	0.6	0.0	0.6	5.1	
Delay (s)		76.5	91.4	87.8	85.7	59.3	74.9	4.6	0.1	25.2	18.4	
Level of Service		E	F	F	F	E	E	A	A	C	B	
Approach Delay (s)		85.3			80.3			6.4			18.4	
Approach LOS		F			F			A			B	

Intersection Summary			
HCM Average Control Delay	19.4	HCM Level of Service	B
HCM Volume to Capacity ratio	0.93		
Actuated Cycle Length (s)	150.0	Sum of lost time (s)	24.0
Intersection Capacity Utilization	87.4%	ICU Level of Service	E
Analysis Period (min)	15		
c Critical Lane Group			

Movement	EBL	EBT	EBR	WBL	WBT	WBR	NBL	NBT	NBR	SBL	SBT	SBR
Lane Configurations												
Volume (vph)	34	17	83	287	9	294	60	2798	236	282	2739	10
Ideal Flow (vphpl)	1900	1900	1900	1900	1900	1900	1900	1900	1900	1900	1900	1900
Total Lost time (s)		6.0	6.0	6.0	6.0	6.0	6.0	6.0	6.0	6.0	6.0	
Lane Util. Factor		1.00	1.00	0.95	0.95	1.00	1.00	0.91	1.00	1.00	0.91	
Frt		1.00	0.85	1.00	1.00	0.85	1.00	1.00	0.85	1.00	1.00	
Flt Protected		0.97	1.00	0.95	0.95	1.00	0.95	1.00	1.00	0.95	1.00	
Satd. Flow (prot)		1803	1583	1681	1690	1583	1770	5085	1583	1770	5082	
Flt Permitted		0.97	1.00	0.95	0.95	1.00	0.05	1.00	1.00	0.05	1.00	
Satd. Flow (perm)		1803	1583	1681	1690	1583	94	5085	1583	88	5082	
Peak-hour factor, PHF	0.95	0.95	0.95	0.95	0.95	0.95	0.95	0.95	0.95	0.95	0.95	0.95
Adj. Flow (vph)	36	18	87	302	9	309	63	2945	248	297	2883	11
RTOR Reduction (vph)	0	0	72	0	0	180	0	0	118	0	0	0
Lane Group Flow (vph)	0	54	15	154	157	129	63	2945	130	297	2894	0
Turn Type	Split		Perm	Split		Perm	pm+pt		Perm	pm+pt		
Protected Phases	4	4		8	8		5	2		1	6	
Permitted Phases			4			8	2		2	6		
Actuated Green, G (s)		11.3	11.3	17.3	17.3	17.3	84.5	78.9	78.9	103.4	91.8	
Effective Green, g (s)		11.3	11.3	17.3	17.3	17.3	84.5	78.9	78.9	103.4	91.8	
Actuated g/C Ratio		0.08	0.08	0.12	0.12	0.12	0.56	0.53	0.53	0.69	0.61	
Clearance Time (s)		6.0	6.0	6.0	6.0	6.0	6.0	6.0	6.0	6.0	6.0	
Vehicle Extension (s)		3.0	3.0	3.0	3.0	3.0	3.0	3.0	3.0	3.0	3.0	
Lane Grp Cap (vph)		136	119	194	195	183	116	2675	833	268	3110	
v/s Ratio Prot		c0.03		0.09	c0.09		0.02	0.58		c0.14	0.57	
v/s Ratio Perm			0.01			0.08	0.29		0.08	c0.63		
v/c Ratio		0.40	0.13	0.79	0.81	0.70	0.54	1.10	0.16	1.11	0.93	
Uniform Delay, d1		66.1	64.7	64.6	64.7	63.9	30.6	35.5	18.4	67.9	26.2	
Progression Factor		1.00	1.00	1.00	1.00	1.00	1.25	0.63	0.67	0.73	1.25	
Incremental Delay, d2		1.9	0.5	19.6	20.9	11.5	3.0	49.4	0.2	67.2	2.7	
Delay (s)		68.0	65.2	84.2	85.6	75.4	41.4	71.8	12.5	116.7	35.3	
Level of Service		E	E	F	F	E	D	E	B	F	D	
Approach Delay (s)		66.3			80.2			66.7			42.9	
Approach LOS		E			F			E			D	

Intersection Summary			
HCM Average Control Delay	57.3	HCM Level of Service	E
HCM Volume to Capacity ratio	0.98		
Actuated Cycle Length (s)	150.0	Sum of lost time (s)	18.0
Intersection Capacity Utilization	99.5%	ICU Level of Service	F
Analysis Period (min)	15		
c Critical Lane Group			

Movement	EBL	EBT	EBR	WBL	WBT	WBR	NBL	NBT	NBR	SBL	SBT	SBR
Lane Configurations												
Volume (vph)	437	107	126	22	97	114	139	2289	27	127	2025	539
Ideal Flow (vphpl)	1900	1900	1900	1900	1900	1900	1900	1900	1900	1900	1900	1900
Total Lost time (s)	6.0	6.0	6.0	6.0	6.0	6.0	6.0	6.0		6.0	6.0	6.0
Lane Util. Factor	0.91	0.91	1.00	0.91	0.91	1.00	1.00	0.91		1.00	0.91	1.00
Frt	1.00	1.00	0.85	1.00	1.00	0.85	1.00	1.00		1.00	1.00	0.85
Flt Protected	0.95	0.97	1.00	0.95	1.00	1.00	0.95	1.00		0.95	1.00	1.00
Satd. Flow (prot)	1610	3280	1583	1610	3387	1583	1770	5077		1770	5085	1583
Flt Permitted	0.95	0.97	1.00	0.95	1.00	1.00	0.95	1.00		0.05	1.00	1.00
Satd. Flow (perm)	1610	3280	1583	1610	3387	1583	1770	5077		98	5085	1583
Peak-hour factor, PHF	0.95	0.95	0.95	0.95	0.95	0.95	0.95	0.95	0.95	0.95	0.95	0.95
Adj. Flow (vph)	460	113	133	23	102	120	146	2409	28	134	2132	567
RTOR Reduction (vph)	0	0	112	0	0	92	0	1	0	0	0	281
Lane Group Flow (vph)	230	343	21	21	104	28	146	2436	0	134	2132	286
Turn Type	Split		Perm	Split		Perm	Prot			pm+pt		Perm
Protected Phases	4	4		8	8		5	2		1	6	
Permitted Phases			4			8				6		6
Actuated Green, G (s)	23.2	23.2	23.2	11.6	11.6	11.6	15.5	80.5		86.4	75.7	75.7
Effective Green, g (s)	23.2	23.2	23.2	11.6	11.6	11.6	15.5	80.5		86.4	75.7	75.7
Actuated g/C Ratio	0.15	0.15	0.15	0.08	0.08	0.08	0.10	0.54		0.58	0.50	0.50
Clearance Time (s)	6.0	6.0	6.0	6.0	6.0	6.0	6.0	6.0		6.0	6.0	6.0
Vehicle Extension (s)	3.0	3.0	3.0	3.0	3.0	3.0	3.0	3.0		3.0	3.0	3.0
Lane Grp Cap (vph)	249	507	245	125	262	122	183	2725		176	2566	799
v/s Ratio Prot	c0.14	0.10		0.01	c0.03		c0.08	c0.48		0.05	0.42	
v/s Ratio Perm			0.01			0.02				0.38		0.18
v/c Ratio	0.92	0.88dl	0.08	0.17	0.40	0.23	0.80	0.89		0.76	0.83	0.36
Uniform Delay, d1	62.5	59.9	54.3	64.7	65.9	65.0	65.7	30.9		39.7	31.7	22.5
Progression Factor	1.02	1.02	1.70	1.00	1.00	1.00	1.00	1.00		1.17	0.87	2.16
Incremental Delay, d2	32.5	3.0	0.1	0.6	1.0	1.0	21.0	5.0		8.1	1.5	0.5
Delay (s)	96.5	64.2	92.3	65.3	66.9	65.9	86.7	36.0		54.7	29.2	49.0
Level of Service	F	E	F	E	E	E	F	D		D	C	D
Approach Delay (s)		80.0			66.3			38.9			34.3	
Approach LOS		F			E			D			C	

Intersection Summary			
HCM Average Control Delay	42.5	HCM Level of Service	D
HCM Volume to Capacity ratio	0.87		
Actuated Cycle Length (s)	150.0	Sum of lost time (s)	24.0
Intersection Capacity Utilization	85.6%	ICU Level of Service	E
Analysis Period (min)	15		

dl Defacto Left Lane. Recode with 1 though lane as a left lane.
c Critical Lane Group

Movement	EBL	EBT	WBT	WBR	SBL	SBR
Lane Configurations						
Volume (vph)	1100	1330	1074	9	0	1161
Ideal Flow (vphpl)	1900	1900	1900	1900	1900	1900
Total Lost time (s)	6.0	4.0	6.0	6.0		4.0
Lane Util. Factor	0.94	0.95	0.95	1.00		1.00
Frt	1.00	1.00	1.00	0.85		0.86
Flt Protected	0.95	1.00	1.00	1.00		1.00
Satd. Flow (prot)	4990	3539	3539	1583		1611
Flt Permitted	0.95	1.00	1.00	1.00		1.00
Satd. Flow (perm)	4990	3539	3539	1583		1611
Peak-hour factor, PHF	0.95	0.95	0.95	0.95	0.95	0.95
Adj. Flow (vph)	1158	1400	1131	9	0	1222
RTOR Reduction (vph)	0	0	0	2	0	0
Lane Group Flow (vph)	1158	1400	1131	7	0	1222
Turn Type	Prot			Perm		Free
Protected Phases	1	Free	2			
Permitted Phases				2		Free
Actuated Green, G (s)	16.0	120.0	92.0	92.0		120.0
Effective Green, g (s)	16.0	120.0	92.0	92.0		120.0
Actuated g/C Ratio	0.13	1.00	0.77	0.77		1.00
Clearance Time (s)	6.0		6.0	6.0		
Vehicle Extension (s)	3.0		3.0	3.0		
Lane Grp Cap (vph)	665	3539	2713	1214		1611
v/s Ratio Prot	c0.23	0.40	0.32			
v/s Ratio Perm				0.00		c0.76
v/c Ratio	1.74	0.40	0.42	0.01		0.76
Uniform Delay, d1	52.0	0.0	4.8	3.3		0.0
Progression Factor	1.00	1.00	1.00	1.00		1.00
Incremental Delay, d2	339.9	0.3	0.5	0.0		3.4
Delay (s)	391.9	0.3	5.3	3.3		3.4
Level of Service	F	A	A	A		A
Approach Delay (s)		177.6	5.3		3.4	
Approach LOS		F	A		A	

Intersection Summary			
HCM Average Control Delay	94.4	HCM Level of Service	F
HCM Volume to Capacity ratio	0.90		
Actuated Cycle Length (s)	120.0	Sum of lost time (s)	6.0
Intersection Capacity Utilization	60.6%	ICU Level of Service	B
Analysis Period (min)	15		
c Critical Lane Group			

Movement	EBL	EBT	EBR	WBL	WBT	WBR	NBL	NBT	NBR	SBL	SBT	SBR
Lane Configurations												
Volume (vph)	565	210	58	53	406	72	63	350	47	60	269	598
Ideal Flow (vphpl)	1900	1900	1900	1900	1900	1900	1900	1900	1900	1900	1900	1900
Total Lost time (s)	6.0	6.0	4.0	6.0	6.0		6.0	6.0		6.0	6.0	6.0
Lane Util. Factor	0.97	0.95	1.00	1.00	0.95		1.00	0.95		1.00	0.95	0.88
Frt	1.00	1.00	0.85	1.00	0.98		1.00	0.98		1.00	1.00	0.85
Flt Protected	0.95	1.00	1.00	0.95	1.00		0.95	1.00		0.95	1.00	1.00
Satd. Flow (prot)	3433	3539	1583	1770	3459		1770	3477		1770	3539	2787
Flt Permitted	0.95	1.00	1.00	0.95	1.00		0.95	1.00		0.95	1.00	1.00
Satd. Flow (perm)	3433	3539	1583	1770	3459		1770	3477		1770	3539	2787
Peak-hour factor, PHF	0.95	0.95	0.95	0.95	0.95	0.95	0.95	0.95	0.95	0.95	0.95	0.95
Adj. Flow (vph)	595	221	61	56	427	76	66	368	49	63	283	629
RTOR Reduction (vph)	0	0	0	0	9	0	0	8	0	0	0	383
Lane Group Flow (vph)	595	221	61	56	494	0	66	409	0	63	283	246
Turn Type	Prot		Free	Prot			Split			Split		pt+ov
Protected Phases	1	6		5	2		4	4		8	8	8 1
Permitted Phases			Free									
Actuated Green, G (s)	34.2	76.3	150.0	8.5	50.6		22.8	22.8		18.4	18.4	58.6
Effective Green, g (s)	34.2	76.3	150.0	8.5	50.6		22.8	22.8		18.4	18.4	58.6
Actuated g/C Ratio	0.23	0.51	1.00	0.06	0.34		0.15	0.15		0.12	0.12	0.39
Clearance Time (s)	6.0	6.0		6.0	6.0		6.0	6.0		6.0	6.0	
Vehicle Extension (s)	3.0	3.0		3.0	3.0		3.0	3.0		3.0	3.0	
Lane Grp Cap (vph)	783	1800	1583	100	1167		269	529		217	434	1089
v/s Ratio Prot	c0.17	0.06		0.03	c0.14		0.04	c0.12		0.04	c0.08	0.09
v/s Ratio Perm			0.04									
v/c Ratio	0.76	0.12	0.04	0.56	0.42		0.25	0.77		0.29	0.65	0.23
Uniform Delay, d1	54.1	19.3	0.0	68.9	38.4		56.0	61.1		59.9	62.7	30.5
Progression Factor	1.00	1.00	1.00	1.06	0.70		0.65	0.67		1.00	1.00	1.00
Incremental Delay, d2	4.3	0.1	0.0	6.6	1.1		0.5	6.7		0.7	3.5	0.1
Delay (s)	58.3	19.5	0.0	79.7	27.9		37.1	47.4		60.6	66.2	30.6
Level of Service	E	B	A	E	C		D	D		E	E	C
Approach Delay (s)		44.5			33.1			46.0			42.9	
Approach LOS		D			C			D			D	

Intersection Summary			
HCM Average Control Delay	42.0	HCM Level of Service	D
HCM Volume to Capacity ratio	0.61		
Actuated Cycle Length (s)	150.0	Sum of lost time (s)	24.0
Intersection Capacity Utilization	64.1%	ICU Level of Service	C
Analysis Period (min)	15		
c Critical Lane Group			

Intersection Sign configuration not allowed in HCM analysis.

Movement	EBL	EBT	EBR	WBL	WBT	WBR	NBL	NBT	NBR	SBL	SBT	SBR
Lane Configurations												
Volume (vph)	80	52	145	42	9	42	128	132	31	17	652	296
Ideal Flow (vphpl)	1900	1900	1900	1900	1900	1900	1900	1900	1900	1900	1900	1900
Total Lost time (s)		6.0	6.0	6.0	6.0		6.0	6.0		6.0	6.0	
Lane Util. Factor		1.00	0.88	1.00	1.00		0.97	0.95		1.00	0.95	
Frt		1.00	0.85	1.00	0.88		1.00	0.97		1.00	0.95	
Flt Protected		0.97	1.00	0.95	1.00		0.95	1.00		0.95	1.00	
Satd. Flow (prot)		1808	2787	1770	1631		3433	3437		1770	3373	
Flt Permitted		0.97	1.00	0.67	1.00		0.95	1.00		0.64	1.00	
Satd. Flow (perm)		1808	2787	1245	1631		3433	3437		1198	3373	
Peak-hour factor, PHF	0.95	0.95	0.95	0.95	0.95	0.95	0.95	0.95	0.95	0.95	0.95	0.95
Adj. Flow (vph)	84	55	153	44	9	44	135	139	33	18	686	312
RTOR Reduction (vph)	0	0	136	0	41	0	0	10	0	0	28	0
Lane Group Flow (vph)	0	139	17	44	12	0	135	162	0	18	970	0
Turn Type	Split		Perm	Perm			Prot			Perm		
Protected Phases	4	4			8		5	2			6	
Permitted Phases			4	8						6		
Actuated Green, G (s)		16.8	16.8	10.3	10.3		11.2	104.9		87.7	87.7	
Effective Green, g (s)		16.8	16.8	10.3	10.3		11.2	104.9		87.7	87.7	
Actuated g/C Ratio		0.11	0.11	0.07	0.07		0.07	0.70		0.58	0.58	
Clearance Time (s)		6.0	6.0	6.0	6.0		6.0	6.0		6.0	6.0	
Vehicle Extension (s)		3.0	3.0	3.0	3.0		3.0	3.0		3.0	3.0	
Lane Grp Cap (vph)		202	312	85	112		256	2404		700	1972	
v/s Ratio Prot		c0.08			0.01		c0.04	0.05			c0.29	
v/s Ratio Perm			0.01	c0.04						0.02		
v/c Ratio		0.69	0.05	0.52	0.11		0.53	0.07		0.03	0.49	
Uniform Delay, d1		64.1	59.5	67.5	65.5		66.9	7.1		13.1	18.2	
Progression Factor		0.74	0.43	1.00	1.00		0.93	1.63		0.53	0.52	
Incremental Delay, d2		9.2	0.1	5.2	0.4		1.9	0.1		0.0	0.2	
Delay (s)		56.9	25.5	72.7	66.0		64.1	11.7		6.9	9.6	
Level of Service		E	C	E	E		E	B		A	A	
Approach Delay (s)		40.5			69.0			34.7			9.5	
Approach LOS		D			E			C			A	

Intersection Summary			
HCM Average Control Delay	22.7	HCM Level of Service	C
HCM Volume to Capacity ratio	0.52		
Actuated Cycle Length (s)	150.0	Sum of lost time (s)	24.0
Intersection Capacity Utilization	60.0%	ICU Level of Service	B
Analysis Period (min)	15		
c Critical Lane Group			

Movement	EBL	EBT	EBR	WBL	WBT	WBR	NBL	NBT	NBR	SBL	SBT	SBR
Lane Configurations												
Volume (vph)	114	826	312	35	501	48	388	302	12	35	339	24
Ideal Flow (vphpl)	1900	1900	1900	1900	1900	1900	1900	1900	1900	1900	1900	1900
Total Lost time (s)	6.0	6.0	6.0	6.0	6.0		6.0	6.0		6.0	6.0	6.0
Lane Util. Factor	1.00	0.95	1.00	1.00	0.95		0.97	0.95		1.00	1.00	1.00
Frt	1.00	1.00	0.85	1.00	0.99		1.00	0.99		1.00	1.00	0.85
Flt Protected	0.95	1.00	1.00	0.95	1.00		0.95	1.00		0.95	1.00	1.00
Satd. Flow (prot)	1770	3539	1583	1770	3492		3433	3518		1770	1863	1583
Flt Permitted	0.28	1.00	1.00	0.21	1.00		0.95	1.00		0.95	1.00	1.00
Satd. Flow (perm)	517	3539	1583	390	3492		3433	3518		1770	1863	1583
Peak-hour factor, PHF	0.95	0.95	0.95	0.95	0.95	0.95	0.95	0.95	0.95	0.95	0.95	0.95
Adj. Flow (vph)	120	869	328	37	527	51	408	318	13	37	357	25
RTOR Reduction (vph)	0	0	234	0	10	0	0	3	0	0	0	19
Lane Group Flow (vph)	120	869	94	37	568	0	408	328	0	37	357	6
Turn Type	pm+pt		Perm	pm+pt			Prot			Prot		Perm
Protected Phases	7	4		3	8		5	2		1	6	
Permitted Phases	4		4	8								6
Actuated Green, G (s)	26.3	21.5	21.5	21.5	19.1		10.5	24.1		3.0	16.6	16.6
Effective Green, g (s)	26.3	21.5	21.5	21.5	19.1		10.5	24.1		3.0	16.6	16.6
Actuated g/C Ratio	0.35	0.29	0.29	0.29	0.25		0.14	0.32		0.04	0.22	0.22
Clearance Time (s)	6.0	6.0	6.0	6.0	6.0		6.0	6.0		6.0	6.0	6.0
Vehicle Extension (s)	3.0	3.0	3.0	3.0	3.0		3.0	3.0		3.0	3.0	3.0
Lane Grp Cap (vph)	261	1015	454	156	889		481	1130		71	412	350
v/s Ratio Prot	c0.03	c0.25		0.01	0.16		c0.12	0.09		0.02	c0.19	
v/s Ratio Perm	0.13		0.06	0.06								0.00
v/c Ratio	0.46	0.86	0.21	0.24	0.64		0.85	0.29		0.52	0.87	0.02
Uniform Delay, d1	17.4	25.3	20.3	20.2	24.9		31.5	19.0		35.3	28.1	22.8
Progression Factor	1.00	1.00	1.00	1.60	1.63		1.44	1.26		0.79	1.59	1.20
Incremental Delay, d2	1.3	7.2	0.2	0.7	1.4		12.7	0.6		6.1	19.4	0.1
Delay (s)	18.7	32.5	20.5	32.9	42.0		57.9	24.7		33.9	64.3	27.5
Level of Service	B	C	C	C	D		E	C		C	E	C
Approach Delay (s)		28.3			41.4			43.0			59.4	
Approach LOS		C			D			D			E	

Intersection Summary			
HCM Average Control Delay	38.6	HCM Level of Service	D
HCM Volume to Capacity ratio	0.77		
Actuated Cycle Length (s)	75.0	Sum of lost time (s)	18.0
Intersection Capacity Utilization	75.1%	ICU Level of Service	D
Analysis Period (min)	15		
c Critical Lane Group			

Movement	EBL	EBT	EBR	WBL	WBT	WBR	NBL	NBT	NBR	SBL	SBT	SBR
Lane Configurations												
Volume (vph)	10	561	263	267	360	237	208	57	528	213	544	27
Ideal Flow (vphpl)	1900	1900	1900	1900	1900	1900	1900	1900	1900	1900	1900	1900
Lane Width	11	11	11	11	11	11	11	11	11	11	11	11
Total Lost time (s)	6.0	6.0		6.0	6.0	6.0	6.0	6.0		6.0	6.0	
Lane Util. Factor	1.00	0.95		1.00	0.95	0.88	1.00	1.00		0.97	1.00	
Frt	1.00	0.95		1.00	1.00	0.85	1.00	0.86		1.00	0.99	
Flt Protected	0.95	1.00		0.95	1.00	1.00	0.95	1.00		0.95	1.00	
Satd. Flow (prot)	1711	3257		1711	3421	2694	1711	1557		3319	1788	
Flt Permitted	0.53	1.00		0.10	1.00	1.00	0.95	1.00		0.95	1.00	
Satd. Flow (perm)	949	3257		171	3421	2694	1711	1557		3319	1788	
Peak-hour factor, PHF	0.95	0.95	0.95	0.95	0.95	0.95	0.95	0.95	0.95	0.95	0.95	0.95
Adj. Flow (vph)	11	591	277	281	379	249	219	60	556	224	573	28
RTOR Reduction (vph)	0	37	0	0	0	0	0	222	0	0	1	0
Lane Group Flow (vph)	11	831	0	281	379	249	219	394	0	224	600	0
Turn Type	pm+pt			pm+pt		pt+ov	Split			Split		
Protected Phases	1	6		5	2	2 8	4	4		8	8	
Permitted Phases	6			2								
Actuated Green, G (s)	38.7	36.0		58.0	49.3	92.3	31.0	31.0		43.0	43.0	
Effective Green, g (s)	38.7	36.0		58.0	49.3	92.3	31.0	31.0		43.0	43.0	
Actuated g/C Ratio	0.26	0.24		0.39	0.33	0.62	0.21	0.21		0.29	0.29	
Clearance Time (s)	6.0	6.0		6.0	6.0		6.0	6.0		6.0	6.0	
Vehicle Extension (s)	3.0	3.0		3.0	3.0		3.0	3.0		3.0	3.0	
Lane Grp Cap (vph)	259	782		230	1124	1658	354	322		951	513	
v/s Ratio Prot	0.00	0.26		c0.13	0.11	0.09	0.13	c0.25		0.07	c0.34	
v/s Ratio Perm	0.01			c0.34								
v/c Ratio	0.04	1.06		1.22	0.34	0.15	0.62	1.22		0.24	1.17	
Uniform Delay, d1	41.6	57.0		45.8	38.0	12.2	54.1	59.5		40.9	53.5	
Progression Factor	0.56	0.64		0.54	0.65	0.24	0.99	1.45		0.63	0.70	
Incremental Delay, d2	0.0	42.1		128.8	0.7	0.0	3.1	124.6		0.1	93.9	
Delay (s)	23.2	78.6		153.7	25.5	3.0	56.9	211.1		26.0	131.1	
Level of Service	C	E		F	C	A	E	F		C	F	
Approach Delay (s)		77.9			59.0			170.6			102.6	
Approach LOS		E			E			F			F	

Intersection Summary			
HCM Average Control Delay	101.3	HCM Level of Service	F
HCM Volume to Capacity ratio	1.18		
Actuated Cycle Length (s)	150.0	Sum of lost time (s)	18.0
Intersection Capacity Utilization	100.5%	ICU Level of Service	G
Analysis Period (min)	15		

c Critical Lane Group

Movement	EBL	EBT	EBR	WBL	WBT	WBR	NBL	NBT	NBR	SBL	SBT	SBR
Lane Configurations												
Volume (vph)	170	969	40	100	1238	157	50	7	50	233	3	89
Ideal Flow (vphpl)	1900	1900	1900	1900	1900	1900	1900	1900	1900	1900	1900	1900
Total Lost time (s)	6.0	6.0		6.0	6.0	6.0	6.0	6.0		6.0	6.0	
Lane Util. Factor	1.00	0.95		1.00	0.95	1.00	1.00	1.00		0.95	0.95	
Frt	1.00	0.99		1.00	1.00	0.85	1.00	0.87		1.00	0.92	
Flt Protected	0.95	1.00		0.95	1.00	1.00	0.95	1.00		0.95	0.98	
Satd. Flow (prot)	1770	3518		1770	3539	1583	1770	1616		1681	1586	
Flt Permitted	0.06	1.00		0.26	1.00	1.00	0.95	1.00		0.95	0.98	
Satd. Flow (perm)	108	3518		490	3539	1583	1770	1616		1681	1586	
Peak-hour factor, PHF	0.95	0.95	0.95	0.95	0.95	0.95	0.95	0.95	0.95	0.95	0.95	0.95
Adj. Flow (vph)	179	1020	42	105	1303	165	53	7	53	245	3	94
RTOR Reduction (vph)	0	2	0	0	0	67	0	44	0	0	31	0
Lane Group Flow (vph)	179	1060	0	105	1303	98	53	16	0	176	135	0
Turn Type	pm+pt			Perm		Perm	Split			Split		
Protected Phases	7	4			8		2	2		6	6	
Permitted Phases	4			8		8						
Actuated Green, G (s)	84.8	84.8		62.9	62.9	62.9	24.2	24.2		23.0	23.0	
Effective Green, g (s)	84.8	84.8		62.9	62.9	62.9	24.2	24.2		23.0	23.0	
Actuated g/C Ratio	0.57	0.57		0.42	0.42	0.42	0.16	0.16		0.15	0.15	
Clearance Time (s)	6.0	6.0		6.0	6.0	6.0	6.0	6.0		6.0	6.0	
Vehicle Extension (s)	3.0	3.0		3.0	3.0	3.0	3.0	3.0		3.0	3.0	
Lane Grp Cap (vph)	237	1989		205	1484	664	286	261		258	243	
v/s Ratio Prot	c0.08	0.30			c0.37		c0.03	0.01		c0.10	0.08	
v/s Ratio Perm	0.35			0.21		0.06						
v/c Ratio	0.76	0.53		0.51	0.88	0.15	0.19	0.06		0.68	0.55	
Uniform Delay, d1	42.9	20.3		32.2	40.0	27.0	54.4	53.3		60.0	58.8	
Progression Factor	1.00	0.57		0.97	0.99	0.80	1.00	1.00		1.00	1.00	
Incremental Delay, d2	12.3	0.3		2.2	6.2	0.1	1.4	0.4		13.7	8.8	
Delay (s)	55.3	11.8		33.4	45.8	21.6	55.8	53.7		73.7	67.6	
Level of Service	E	B		C	D	C	E	D		E	E	
Approach Delay (s)		18.1			42.4			54.7			70.7	
Approach LOS		B			D			D			E	

Intersection Summary			
HCM Average Control Delay	36.6	HCM Level of Service	D
HCM Volume to Capacity ratio	0.70		
Actuated Cycle Length (s)	150.0	Sum of lost time (s)	24.0
Intersection Capacity Utilization	74.6%	ICU Level of Service	D
Analysis Period (min)	15		
c Critical Lane Group			

Movement	WBL	WBR	NBT	NBR	SBL	SBT
Lane Configurations						
Volume (vph)	244	101	66	272	147	14
Ideal Flow (vphpl)	1900	1900	1900	1900	1900	1900
Total Lost time (s)	6.0	6.0	6.0	6.0	6.0	6.0
Lane Util. Factor	1.00	1.00	1.00	1.00	1.00	1.00
Frt	1.00	0.85	1.00	0.85	1.00	1.00
Flt Protected	0.95	1.00	1.00	1.00	0.95	1.00
Satd. Flow (prot)	1770	1583	1863	1583	1770	1863
Flt Permitted	0.95	1.00	1.00	1.00	0.71	1.00
Satd. Flow (perm)	1770	1583	1863	1583	1326	1863
Peak-hour factor, PHF	0.95	0.95	0.95	0.95	0.95	0.95
Adj. Flow (vph)	257	106	69	286	155	15
RTOR Reduction (vph)	0	83	0	108	0	0
Lane Group Flow (vph)	257	23	69	178	155	15
Turn Type		Perm		Perm	Perm	
Protected Phases	8		2			6
Permitted Phases		8		2	6	
Actuated Green, G (s)	16.3	16.3	46.7	46.7	46.7	46.7
Effective Green, g (s)	16.3	16.3	46.7	46.7	46.7	46.7
Actuated g/C Ratio	0.22	0.22	0.62	0.62	0.62	0.62
Clearance Time (s)	6.0	6.0	6.0	6.0	6.0	6.0
Vehicle Extension (s)	3.0	3.0	3.0	3.0	3.0	3.0
Lane Grp Cap (vph)	385	344	1160	986	826	1160
v/s Ratio Prot	c0.15		0.04			0.01
v/s Ratio Perm		0.01		0.11	c0.12	
v/c Ratio	0.67	0.07	0.06	0.18	0.19	0.01
Uniform Delay, d1	26.9	23.3	5.5	6.0	6.0	5.4
Progression Factor	0.79	1.31	0.70	0.77	1.00	1.00
Incremental Delay, d2	3.2	0.1	0.1	0.4	0.5	0.0
Delay (s)	24.4	30.5	4.0	5.0	6.5	5.4
Level of Service	C	C	A	A	A	A
Approach Delay (s)	26.2		4.8			6.4
Approach LOS	C		A			A

Intersection Summary			
HCM Average Control Delay	13.9	HCM Level of Service	B
HCM Volume to Capacity ratio	0.31		
Actuated Cycle Length (s)	75.0	Sum of lost time (s)	12.0
Intersection Capacity Utilization	38.3%	ICU Level of Service	A
Analysis Period (min)	15		
c Critical Lane Group			

Movement	EBL	EBT	EBR	WBL	WBT	WBR	NBL	NBT	NBR	SBL	SBT	SBR
Lane Configurations												
Volume (vph)	140	227	30	0	48	81	19	418	0	76	750	281
Ideal Flow (vphpl)	1900	1900	1900	1900	1900	1900	1900	1900	1900	1900	1900	1900
Total Lost time (s)	6.0	6.0	6.0		6.0	6.0		6.0		6.0	6.0	
Lane Util. Factor	1.00	0.95	1.00		0.95	1.00		0.95		0.91	0.91	
Frt	1.00	1.00	0.85		1.00	0.85		1.00		1.00	0.96	
Flt Protected	0.95	1.00	1.00		1.00	1.00		1.00		0.95	1.00	
Satd. Flow (prot)	1770	3539	1583		3539	1583		3532		1610	3251	
Flt Permitted	0.46	1.00	1.00		1.00	1.00		1.00		0.95	1.00	
Satd. Flow (perm)	853	3539	1583		3539	1583		3532		1610	3251	
Peak-hour factor, PHF	0.95	0.95	0.95	0.95	0.95	0.95	0.95	0.95	0.95	0.95	0.95	0.95
Adj. Flow (vph)	147	239	32	0	51	85	20	440	0	80	789	296
RTOR Reduction (vph)	0	0	26	0	0	79	0	0	0	0	23	0
Lane Group Flow (vph)	147	239	6	0	51	6	0	460	0	72	1070	0
Turn Type	pm+pt		Perm			Perm	Split			Split		
Protected Phases	7	4			8		2	2		6	6	
Permitted Phases	4		4			8						
Actuated Green, G (s)	29.1	29.1	29.1		10.4	10.4		37.9		65.0	65.0	
Effective Green, g (s)	29.1	29.1	29.1		10.4	10.4		37.9		65.0	65.0	
Actuated g/C Ratio	0.19	0.19	0.19		0.07	0.07		0.25		0.43	0.43	
Clearance Time (s)	6.0	6.0	6.0		6.0	6.0		6.0		6.0	6.0	
Vehicle Extension (s)	3.0	3.0	3.0		3.0	3.0		3.0		3.0	3.0	
Lane Grp Cap (vph)	243	687	307		245	110		892		698	1409	
v/s Ratio Prot	c0.05	0.07			0.01			c0.13		0.04	c0.33	
v/s Ratio Perm	c0.07		0.00			0.00						
v/c Ratio	0.60	0.35	0.02		0.21	0.05		0.52		0.10	0.76	
Uniform Delay, d1	53.3	52.2	48.9		65.9	65.2		48.2		25.2	35.9	
Progression Factor	0.87	0.87	0.86		0.73	0.68		0.80		0.77	0.79	
Incremental Delay, d2	4.1	0.3	0.0		0.4	0.2		1.6		0.3	3.5	
Delay (s)	50.5	45.9	42.2		48.6	44.4		40.3		19.7	32.0	
Level of Service	D	D	D		D	D		D		B	C	
Approach Delay (s)		47.2			46.0			40.3			31.2	
Approach LOS		D			D			D			C	

Intersection Summary			
HCM Average Control Delay	37.1	HCM Level of Service	D
HCM Volume to Capacity ratio	0.65		
Actuated Cycle Length (s)	150.0	Sum of lost time (s)	18.0
Intersection Capacity Utilization	63.1%	ICU Level of Service	B
Analysis Period (min)	15		
c Critical Lane Group			

Movement	EBL	EBT	EBR	WBL	WBT	WBR	NBL	NBT	NBR	SBL	SBT	SBR
Lane Configurations												
Volume (vph)	12	261	166	72	204	12	116	0	72	1	1	19
Ideal Flow (vphpl)	1900	1900	1900	1900	1900	1900	1900	1900	1900	1900	1900	1900
Total Lost time (s)	6.0	6.0		6.0	6.0		6.0	6.0			6.0	
Lane Util. Factor	1.00	0.95		1.00	0.95		1.00	1.00			1.00	
Frt	1.00	0.94		1.00	0.99		1.00	0.85			0.88	
Flt Protected	0.95	1.00		0.95	1.00		0.95	1.00			1.00	
Satd. Flow (prot)	1770	3333		1770	3509		1770	1583			1630	
Flt Permitted	0.61	1.00		0.15	1.00		0.74	1.00			1.00	
Satd. Flow (perm)	1135	3333		273	3509		1384	1583			1628	
Peak-hour factor, PHF	0.95	0.95	0.95	0.95	0.95	0.95	0.95	0.95	0.95	0.95	0.95	0.95
Adj. Flow (vph)	13	275	175	76	215	13	122	0	76	1	1	20
RTOR Reduction (vph)	0	93	0	0	5	0	0	26	0	0	7	0
Lane Group Flow (vph)	13	357	0	76	223	0	122	50	0	0	15	0
Turn Type	Perm			pm+pt			Perm			Perm		
Protected Phases		4		3	8			2			6	
Permitted Phases	4			8			2			6		
Actuated Green, G (s)	21.7	21.7		38.4	38.4		99.6	99.6			99.6	
Effective Green, g (s)	21.7	21.7		38.4	38.4		99.6	99.6			99.6	
Actuated g/C Ratio	0.14	0.14		0.26	0.26		0.66	0.66			0.66	
Clearance Time (s)	6.0	6.0		6.0	6.0		6.0	6.0			6.0	
Vehicle Extension (s)	3.0	3.0		3.0	3.0		3.0	3.0			3.0	
Lane Grp Cap (vph)	164	482		177	898		919	1051			1081	
v/s Ratio Prot		c0.11		c0.03	0.06			0.03				
v/s Ratio Perm	0.01			0.08			c0.09				0.01	
v/c Ratio	0.08	0.74		0.43	0.25		0.13	0.05			0.01	
Uniform Delay, d1	55.5	61.4		44.8	44.3		9.3	8.7			8.5	
Progression Factor	0.27	0.27		1.00	1.00		1.00	1.00			1.00	
Incremental Delay, d2	0.2	6.0		1.7	0.1		0.3	0.1			0.0	
Delay (s)	15.3	22.3		46.4	44.5		9.6	8.8			8.6	
Level of Service	B	C		D	D		A	A			A	
Approach Delay (s)		22.1			45.0			9.3			8.6	
Approach LOS		C			D			A			A	

Intersection Summary			
HCM Average Control Delay	26.3	HCM Level of Service	C
HCM Volume to Capacity ratio	0.26		
Actuated Cycle Length (s)	150.0	Sum of lost time (s)	18.0
Intersection Capacity Utilization	44.6%	ICU Level of Service	A
Analysis Period (min)	15		
c Critical Lane Group			

Movement	EBL	EBT	EBR	WBL	WBT	WBR	NBL	NBT	NBR	SBL	SBT	SBR
Lane Configurations												
Volume (vph)	5	487	177	413	401	52	190	609	330	156	713	10
Ideal Flow (vphpl)	1900	1900	1900	1900	1900	1900	1900	1900	1900	1900	1900	1900
Total Lost time (s)	6.0	6.0	6.0	6.0	6.0		6.0	6.0	6.0	6.0	6.0	
Lane Util. Factor	1.00	0.95	1.00	0.97	0.95		0.97	0.95	1.00	1.00	0.95	
Frt	1.00	1.00	0.85	1.00	0.98		1.00	1.00	0.85	1.00	1.00	
Flt Protected	0.95	1.00	1.00	0.95	1.00		0.95	1.00	1.00	0.95	1.00	
Satd. Flow (prot)	1770	3539	1583	3433	3478		3433	3539	1583	1770	3532	
Flt Permitted	0.95	1.00	1.00	0.95	1.00		0.95	1.00	1.00	0.95	1.00	
Satd. Flow (perm)	1770	3539	1583	3433	3478		3433	3539	1583	1770	3532	
Peak-hour factor, PHF	0.95	0.95	0.95	0.95	0.95	0.95	0.95	0.95	0.95	0.95	0.95	0.95
Adj. Flow (vph)	5	513	186	435	422	55	200	641	347	164	751	11
RTOR Reduction (vph)	0	0	81	0	7	0	0	0	273	0	1	0
Lane Group Flow (vph)	5	513	105	435	470	0	200	641	74	164	761	0
Turn Type	Prot		Perm	Prot			Split		Perm	Split		
Protected Phases	7	4		3	8		1	1		2	2	
Permitted Phases			4						1			
Actuated Green, G (s)	1.4	30.4	30.4	22.5	51.5		32.1	32.1	32.1	41.0	41.0	
Effective Green, g (s)	1.4	30.4	30.4	22.5	51.5		32.1	32.1	32.1	41.0	41.0	
Actuated g/C Ratio	0.01	0.20	0.20	0.15	0.34		0.21	0.21	0.21	0.27	0.27	
Clearance Time (s)	6.0	6.0	6.0	6.0	6.0		6.0	6.0	6.0	6.0	6.0	
Vehicle Extension (s)	3.0	3.0	3.0	3.0	3.0		3.0	3.0	3.0	3.0	3.0	
Lane Grp Cap (vph)	17	717	321	515	1194		735	757	339	484	965	
v/s Ratio Prot	0.00	c0.14		c0.13	0.14		0.06	c0.18		0.09	c0.22	
v/s Ratio Perm			0.07						0.05			
v/c Ratio	0.29	0.72	0.33	0.84	0.39		0.27	0.85	0.22	0.34	0.79	
Uniform Delay, d1	73.8	55.8	51.1	62.0	37.4		49.2	56.6	48.6	43.6	50.5	
Progression Factor	1.08	0.99	1.07	0.76	0.91		0.53	0.57	1.06	0.71	0.75	
Incremental Delay, d2	7.6	2.7	0.5	11.0	0.2		0.2	6.8	0.2	1.7	5.9	
Delay (s)	87.4	58.1	54.9	58.0	34.2		26.1	39.3	51.9	32.8	43.6	
Level of Service	F	E	D	E	C		C	D	D	C	D	
Approach Delay (s)		57.5			45.5			40.8			41.7	
Approach LOS		E			D			D			D	

Intersection Summary			
HCM Average Control Delay	45.3	HCM Level of Service	D
HCM Volume to Capacity ratio	0.80		
Actuated Cycle Length (s)	150.0	Sum of lost time (s)	24.0
Intersection Capacity Utilization	70.7%	ICU Level of Service	C
Analysis Period (min)	15		
c Critical Lane Group			

Movement	EBL	EBT	EBR	WBL	WBT	WBR	NBL	NBT	NBR	SBL	SBT	SBR
Lane Configurations												
Volume (vph)	158	497	426	30	378	59	397	34	89	103	23	166
Ideal Flow (vphpl)	1900	1900	1900	1900	1900	1900	1900	1900	1900	1900	1900	1900
Total Lost time (s)	6.0	6.0	6.0	6.0	6.0	6.0	6.0	6.0	6.0	6.0	6.0	
Lane Util. Factor	1.00	0.95	1.00	1.00	0.95	1.00	0.95	0.95	1.00	1.00	1.00	
Frt	1.00	1.00	0.85	1.00	1.00	0.85	1.00	1.00	0.85	1.00	0.87	
Flt Protected	0.95	1.00	1.00	0.95	1.00	1.00	0.95	0.96	1.00	0.95	1.00	
Satd. Flow (prot)	1770	3539	1583	1770	3539	1583	1681	1698	1583	1770	1617	
Flt Permitted	0.50	1.00	1.00	0.39	1.00	1.00	0.95	0.46	1.00	0.95	1.00	
Satd. Flow (perm)	927	3539	1583	725	3539	1583	1681	820	1583	1770	1617	
Peak-hour factor, PHF	0.95	0.95	0.95	0.95	0.95	0.95	0.95	0.95	0.95	0.95	0.95	0.95
Adj. Flow (vph)	166	523	448	32	398	62	418	36	94	108	24	175
RTOR Reduction (vph)	0	0	312	0	0	43	0	0	61	0	129	0
Lane Group Flow (vph)	166	523	136	32	398	19	226	228	33	108	70	0
Turn Type	Perm		Perm	Perm		Perm	Prot		Perm	Prot		
Protected Phases		4			8		5	2		1	6	
Permitted Phases	4		4	8		8			2			
Actuated Green, G (s)	22.8	22.8	22.8	22.8	22.8	22.8	14.3	40.2	26.6	7.6	19.9	
Effective Green, g (s)	22.8	22.8	22.8	22.8	22.8	22.8	14.3	40.2	26.6	7.6	19.9	
Actuated g/C Ratio	0.30	0.30	0.30	0.30	0.30	0.30	0.19	0.54	0.35	0.10	0.27	
Clearance Time (s)	6.0	6.0	6.0	6.0	6.0	6.0	6.0	6.0	6.0	6.0	6.0	
Vehicle Extension (s)	3.0	3.0	3.0	3.0	3.0	3.0	3.0	3.0	3.0	3.0	3.0	
Lane Grp Cap (vph)	282	1076	481	220	1076	481	321	607	561	179	429	
v/s Ratio Prot		0.15			0.11		c0.13	0.07		0.06	0.04	
v/s Ratio Perm	c0.18		0.09	0.04		0.01		c0.13	0.02			
v/c Ratio	0.59	0.49	0.28	0.15	0.37	0.04	0.70	0.38	0.06	0.60	0.16	
Uniform Delay, d1	22.1	21.3	19.9	19.0	20.5	18.4	28.4	10.1	16.0	32.3	21.2	
Progression Factor	0.74	0.73	2.04	1.13	1.27	2.26	0.99	0.99	0.82	1.00	1.00	
Incremental Delay, d2	7.2	1.3	1.2	1.2	0.9	0.1	6.9	0.4	0.2	5.6	0.8	
Delay (s)	23.7	16.8	41.7	22.7	26.8	41.7	35.1	10.4	13.2	37.9	22.0	
Level of Service	C	B	D	C	C	D	D	B	B	D	C	
Approach Delay (s)		27.6			28.5			21.1			27.6	
Approach LOS		C			C			C			C	

Intersection Summary			
HCM Average Control Delay	26.3	HCM Level of Service	C
HCM Volume to Capacity ratio	0.51		
Actuated Cycle Length (s)	75.0	Sum of lost time (s)	12.0
Intersection Capacity Utilization	62.5%	ICU Level of Service	B
Analysis Period (min)	15		
c Critical Lane Group			

Movement	EBL	EBR	NBL	NBT	SBT	SBR
Lane Configurations						
Volume (veh/h)	100	100	21	287	287	55
Sign Control	Stop			Free	Free	
Grade	0%			0%	0%	
Peak Hour Factor	0.95	0.95	0.95	0.95	0.95	0.95
Hourly flow rate (vph)	105	105	22	302	302	58
Pedestrians						
Lane Width (ft)						
Walking Speed (ft/s)						
Percent Blockage						
Right turn flare (veh)						
Median type				None	None	
Median storage veh)						
Upstream signal (ft)					1305	
pX, platoon unblocked						
vC, conflicting volume	648	302	360			
vC1, stage 1 conf vol						
vC2, stage 2 conf vol						
vCu, unblocked vol	648	302	360			
tC, single (s)	6.4	6.2	4.1			
tC, 2 stage (s)						
tF (s)	3.5	3.3	2.2			
p0 queue free %	75	86	98			
cM capacity (veh/h)	427	738	1199			

Direction, Lane #	EB 1	EB 2	NB 1	NB 2	SB 1	SB 2
Volume Total	105	105	22	302	302	58
Volume Left	105	0	22	0	0	0
Volume Right	0	105	0	0	0	58
cSH	427	738	1199	1700	1700	1700
Volume to Capacity	0.25	0.14	0.02	0.18	0.18	0.03
Queue Length 95th (ft)	24	12	1	0	0	0
Control Delay (s)	16.2	10.7	8.1	0.0	0.0	0.0
Lane LOS	C	B	A			
Approach Delay (s)	13.4		0.5		0.0	
Approach LOS	B					

Intersection Summary			
Average Delay	3.4		
Intersection Capacity Utilization	29.7%	ICU Level of Service	A
Analysis Period (min)	15		

Movement	EBL	EBT	EBR	WBL	WBT	WBR	NBL	NBT	NBR	SBL	SBT	SBR
Lane Configurations												
Volume (vph)	72	87	132	569	90	134	92	1123	469	178	1085	57
Ideal Flow (vphpl)	1900	1900	1900	1900	1900	1900	1900	1900	1900	1900	1900	1900
Total Lost time (s)		6.0		6.0	6.0		6.0	6.0	6.0	6.0	6.0	
Lane Util. Factor		0.95		0.97	1.00		1.00	0.95	1.00	1.00	0.91	
Frt		0.93		1.00	0.91		1.00	1.00	0.85	1.00	0.99	
Flt Protected		0.99		0.95	1.00		0.95	1.00	1.00	0.95	1.00	
Satd. Flow (prot)		3259		3433	1696		1770	3539	1583	1770	5047	
Flt Permitted		0.99		0.95	1.00		0.18	1.00	1.00	0.10	1.00	
Satd. Flow (perm)		3259		3433	1696		331	3539	1583	192	5047	
Peak-hour factor, PHF	0.95	0.95	0.95	0.95	0.95	0.95	0.95	0.95	0.95	0.95	0.95	0.95
Adj. Flow (vph)	76	92	139	599	95	141	97	1182	494	187	1142	60
RTOR Reduction (vph)	0	103	0	0	36	0	0	0	191	0	4	0
Lane Group Flow (vph)	0	204	0	599	200	0	97	1182	303	187	1198	0
Turn Type	Split			Split			pm+pt		Perm	pm+pt		
Protected Phases	4	4		8	8		5	2		1	6	
Permitted Phases							2		2	6		
Actuated Green, G (s)		13.7		30.3	30.3		77.0	68.7	68.7	87.0	73.7	
Effective Green, g (s)		13.7		30.3	30.3		77.0	68.7	68.7	87.0	73.7	
Actuated g/C Ratio		0.09		0.20	0.20		0.51	0.46	0.46	0.58	0.49	
Clearance Time (s)		6.0		6.0	6.0		6.0	6.0	6.0	6.0	6.0	
Vehicle Extension (s)		3.0		3.0	3.0		3.0	3.0	3.0	3.0	3.0	
Lane Grp Cap (vph)		298		693	343		250	1621	725	251	2480	
v/s Ratio Prot		c0.06		c0.17	0.12		0.02	0.33		c0.07	0.24	
v/s Ratio Perm							0.18		0.19	c0.37		
v/c Ratio		0.69		0.86	0.58		0.39	0.73	0.42	0.75	0.48	
Uniform Delay, d1		66.1		57.9	54.1		19.6	33.1	27.2	24.9	25.4	
Progression Factor		1.00		0.71	0.62		0.71	0.54	0.41	1.15	0.41	
Incremental Delay, d2		6.4		9.4	2.1		0.9	2.5	1.5	8.3	0.5	
Delay (s)		72.5		50.5	35.5		14.9	20.5	12.6	36.9	10.8	
Level of Service		E		D	D		B	C	B	D	B	
Approach Delay (s)		72.5			46.2			18.0			14.3	
Approach LOS		E			D			B			B	

Intersection Summary			
HCM Average Control Delay	26.2	HCM Level of Service	C
HCM Volume to Capacity ratio	0.78		
Actuated Cycle Length (s)	150.0	Sum of lost time (s)	24.0
Intersection Capacity Utilization	85.9%	ICU Level of Service	E
Analysis Period (min)	15		
c Critical Lane Group			

Movement	EBL	EBT	EBR	WBL	WBT	WBR	NBL	NBT	NBR	SBL	SBT	SBR
Lane Configurations												
Volume (vph)	96	533	145	6	557	204	136	142	9	203	180	183
Ideal Flow (vphpl)	1900	1900	1900	1900	1900	1900	1900	1900	1900	1900	1900	1900
Total Lost time (s)	6.0	6.0		6.0	6.0		6.0	6.0		6.0	6.0	
Lane Util. Factor	1.00	0.95		1.00	0.95		1.00	0.95		1.00	0.95	
Frt	1.00	0.97		1.00	0.96		1.00	0.99		1.00	0.92	
Flt Protected	0.95	1.00		0.95	1.00		0.95	1.00		0.95	1.00	
Satd. Flow (prot)	1770	3425		1770	3397		1770	3509		1770	3271	
Flt Permitted	0.13	1.00		0.31	1.00		0.95	1.00		0.95	1.00	
Satd. Flow (perm)	250	3425		575	3397		1770	3509		1770	3271	
Peak-hour factor, PHF	0.95	0.95	0.95	0.95	0.95	0.95	0.95	0.95	0.95	0.95	0.95	0.95
Adj. Flow (vph)	101	561	153	6	586	215	143	149	9	214	189	193
RTOR Reduction (vph)	0	17	0	0	27	0	0	2	0	0	130	0
Lane Group Flow (vph)	101	697	0	6	774	0	143	156	0	214	252	0
Turn Type	pm+pt			pm+pt			Prot			Prot		
Protected Phases	7	4		3	8		5	2		1	6	
Permitted Phases	4			8								
Actuated Green, G (s)	63.3	56.0		47.1	45.8		40.5	45.3		23.4	28.2	
Effective Green, g (s)	63.3	56.0		47.1	45.8		40.5	45.3		23.4	28.2	
Actuated g/C Ratio	0.42	0.37		0.31	0.31		0.27	0.30		0.16	0.19	
Clearance Time (s)	6.0	6.0		6.0	6.0		6.0	6.0		6.0	6.0	
Vehicle Extension (s)	3.0	3.0		3.0	3.0		3.0	3.0		3.0	3.0	
Lane Grp Cap (vph)	222	1279		191	1037		478	1060		276	615	
v/s Ratio Prot	c0.03	c0.20		0.00	c0.23		c0.08	0.04		c0.12	c0.08	
v/s Ratio Perm	0.16			0.01								
v/c Ratio	0.45	0.55		0.03	0.75		0.30	0.15		0.78	0.41	
Uniform Delay, d1	30.6	37.0		35.7	46.9		43.5	38.2		60.8	53.6	
Progression Factor	0.65	0.68		0.64	0.57		0.80	1.15		1.02	0.94	
Incremental Delay, d2	1.2	0.4		0.1	2.8		1.5	0.3		12.8	0.4	
Delay (s)	21.1	25.7		23.0	29.5		36.5	44.1		75.0	51.0	
Level of Service	C	C		C	C		D	D		E	D	
Approach Delay (s)		25.2			29.4			40.5			59.6	
Approach LOS		C			C			D			E	

Intersection Summary			
HCM Average Control Delay	36.5	HCM Level of Service	D
HCM Volume to Capacity ratio	0.62		
Actuated Cycle Length (s)	150.0	Sum of lost time (s)	30.0
Intersection Capacity Utilization	65.6%	ICU Level of Service	C
Analysis Period (min)	15		
c Critical Lane Group			

Movement	EBL	EBT	EBR	WBL	WBT	WBR	NBL	NBT	NBR	SBL	SBT	SBR
Lane Configurations												
Volume (vph)	108	901	50	100	886	136	50	100	100	82	50	144
Ideal Flow (vphpl)	1900	1900	1900	1900	1900	1900	1900	1900	1900	1900	1900	1900
Total Lost time (s)	6.0	6.0		6.0	6.0		6.0	6.0		6.0	6.0	
Lane Util. Factor	1.00	0.95		1.00	0.95		1.00	1.00		1.00	1.00	
Frt	1.00	0.99		1.00	0.98		1.00	0.93		1.00	0.89	
Flt Protected	0.95	1.00		0.95	1.00		0.95	1.00		0.95	1.00	
Satd. Flow (prot)	1593	3160		1593	3122		1593	1551		1593	1490	
Flt Permitted	0.95	1.00		0.95	1.00		0.95	1.00		0.95	1.00	
Satd. Flow (perm)	1593	3160		1593	3122		1593	1551		1593	1490	
Peak-hour factor, PHF	0.95	0.95	0.95	0.95	0.95	0.95	0.95	0.95	0.95	0.95	0.95	0.95
Adj. Flow (vph)	114	948	53	105	933	143	53	105	105	86	53	152
RTOR Reduction (vph)	0	3	0	0	8	0	0	24	0	0	66	0
Lane Group Flow (vph)	114	998	0	105	1068	0	53	186	0	86	139	0
Turn Type	Prot			Prot			Prot			Prot		
Protected Phases	5	2		1	6		3	8		7	4	
Permitted Phases												
Actuated Green, G (s)	18.0	67.3		14.5	63.8		8.2	31.7		12.5	36.0	
Effective Green, g (s)	18.0	67.3		14.5	63.8		8.2	31.7		12.5	36.0	
Actuated g/C Ratio	0.12	0.45		0.10	0.43		0.05	0.21		0.08	0.24	
Clearance Time (s)	6.0	6.0		6.0	6.0		6.0	6.0		6.0	6.0	
Vehicle Extension (s)	3.0	3.0		3.0	3.0		3.0	3.0		3.0	3.0	
Lane Grp Cap (vph)	191	1418		154	1328		87	328		133	358	
v/s Ratio Prot	c0.07	c0.32		0.07	c0.34		0.03	c0.12		c0.05	c0.09	
v/s Ratio Perm												
v/c Ratio	0.60	0.70		0.68	0.80		0.61	0.57		0.65	0.39	
Uniform Delay, d1	62.6	33.3		65.5	37.6		69.3	53.0		66.6	47.8	
Progression Factor	0.78	0.83		1.14	0.75		1.00	1.00		0.96	1.04	
Incremental Delay, d2	12.0	2.7		10.3	4.6		11.5	2.3		10.3	3.1	
Delay (s)	61.0	30.4		85.1	33.0		80.8	55.3		74.3	53.0	
Level of Service	E	C		F	C		F	E		E	D	
Approach Delay (s)		33.5			37.6			60.4			59.3	
Approach LOS		C			D			E			E	

Intersection Summary			
HCM Average Control Delay	40.3	HCM Level of Service	D
HCM Volume to Capacity ratio	0.78		
Actuated Cycle Length (s)	150.0	Sum of lost time (s)	36.0
Intersection Capacity Utilization	76.4%	ICU Level of Service	D
Analysis Period (min)	15		
c Critical Lane Group			

Movement	EBL	EBT	EBR	WBL	WBT	WBR	NBL	NBT	NBR	SBL	SBT	SBR
Lane Configurations												
Volume (vph)	7	0	10	111	0	19	9	1694	173	28	1698	10
Ideal Flow (vphpl)	1900	1900	1900	1900	1900	1900	1900	1900	1900	1900	1900	1900
Total Lost time (s)		6.0		6.0		6.0	6.0	6.0		6.0	6.0	
Lane Util. Factor		1.00		1.00		1.00	1.00	0.91		1.00	0.91	
Frt		0.92		1.00		0.85	1.00	0.99		1.00	1.00	
Flt Protected		0.98		0.95		1.00	0.95	1.00		0.95	1.00	
Satd. Flow (prot)		1676		1770		1583	1770	5015		1770	5081	
Flt Permitted		0.98		0.95		1.00	0.10	1.00		0.08	1.00	
Satd. Flow (perm)		1676		1770		1583	185	5015		148	5081	
Peak-hour factor, PHF	0.95	0.95	0.95	0.95	0.95	0.95	0.95	0.95	0.95	0.95	0.95	0.95
Adj. Flow (vph)	7	0	11	117	0	20	9	1783	182	29	1787	11
RTOR Reduction (vph)	0	10	0	0	0	18	0	6	0	0	0	0
Lane Group Flow (vph)	0	8	0	117	0	2	9	1959	0	29	1798	0
Turn Type	Split			custom		custom	Perm			Perm		
Protected Phases	4	4		8				2			6	
Permitted Phases				8		8	2			6		
Actuated Green, G (s)		7.6		15.0		15.0	109.4	109.4		109.4	109.4	
Effective Green, g (s)		7.6		15.0		15.0	109.4	109.4		109.4	109.4	
Actuated g/C Ratio		0.05		0.10		0.10	0.73	0.73		0.73	0.73	
Clearance Time (s)		6.0		6.0		6.0	6.0	6.0		6.0	6.0	
Vehicle Extension (s)		3.0		3.0		3.0	3.0	3.0		3.0	3.0	
Lane Grp Cap (vph)		85		177		158	135	3658		108	3706	
v/s Ratio Prot		c0.00		c0.07				c0.39			0.35	
v/s Ratio Perm						0.00	0.05			0.20		
v/c Ratio		0.09		0.66		0.01	0.07	0.54		0.27	0.49	
Uniform Delay, d1		67.9		65.0		60.8	5.8	9.0		6.8	8.5	
Progression Factor		1.00		1.00		1.45	0.60	0.51		0.66	0.69	
Incremental Delay, d2		0.5		5.5		0.0	0.7	0.4		4.8	0.4	
Delay (s)		68.4		70.3		88.4	4.2	5.0		9.3	6.2	
Level of Service		E		E		F	A	A		A	A	
Approach Delay (s)		68.4			73.0			5.0			6.3	
Approach LOS		E			E			A			A	

Intersection Summary			
HCM Average Control Delay	8.2	HCM Level of Service	A
HCM Volume to Capacity ratio	0.52		
Actuated Cycle Length (s)	150.0	Sum of lost time (s)	18.0
Intersection Capacity Utilization	58.2%	ICU Level of Service	B
Analysis Period (min)	15		
c Critical Lane Group			

Movement	EBL	EBT	EBR	WBL	WBT	WBR	NBL	NBT	NBR	SBL	SBT	SBR
Lane Configurations												
Volume (vph)	283	219	101	468	228	60	229	1572	469	67	1562	258
Ideal Flow (vphpl)	1900	1900	1900	1900	1900	1900	1900	1900	1900	1900	1900	1900
Total Lost time (s)	6.0	6.0		6.0	6.0	6.0	6.0	6.0	6.0	6.0	6.0	
Lane Util. Factor	0.97	0.95		0.97	0.95	1.00	1.00	0.91	1.00	1.00	0.91	
Frt	1.00	0.95		1.00	1.00	0.85	1.00	1.00	0.85	1.00	0.98	
Flt Protected	0.95	1.00		0.95	1.00	1.00	0.95	1.00	1.00	0.95	1.00	
Satd. Flow (prot)	3433	3372		3433	3539	1583	1770	5085	1583	1770	4977	
Flt Permitted	0.95	1.00		0.95	1.00	1.00	0.06	1.00	1.00	0.10	1.00	
Satd. Flow (perm)	3433	3372		3433	3539	1583	102	5085	1583	182	4977	
Peak-hour factor, PHF	0.95	0.95	0.95	0.95	0.95	0.95	0.95	0.95	0.95	0.95	0.95	0.95
Adj. Flow (vph)	298	231	106	493	240	63	241	1655	494	71	1644	272
RTOR Reduction (vph)	0	36	0	0	0	53	0	0	209	0	14	0
Lane Group Flow (vph)	298	301	0	493	240	10	241	1655	285	71	1902	0
Turn Type	Prot			Prot		Perm	pm+pt		Perm	pm+pt		
Protected Phases	7	4		3	8		5	2		1	6	
Permitted Phases						8	2		2	6		
Actuated Green, G (s)	17.6	16.4		24.2	23.0	23.0	91.4	78.0	78.0	74.1	66.7	
Effective Green, g (s)	17.6	16.4		24.2	23.0	23.0	91.4	78.0	78.0	74.1	66.7	
Actuated g/C Ratio	0.12	0.11		0.16	0.15	0.15	0.61	0.52	0.52	0.49	0.44	
Clearance Time (s)	6.0	6.0		6.0	6.0	6.0	6.0	6.0	6.0	6.0	6.0	
Vehicle Extension (s)	3.0	3.0		3.0	3.0	3.0	3.0	3.0	3.0	3.0	3.0	
Lane Grp Cap (vph)	403	369		554	543	243	270	2644	823	168	2213	
v/s Ratio Prot	0.09	c0.09		c0.14	0.07		c0.11	0.33		0.02	0.38	
v/s Ratio Perm						0.01	c0.43		0.18	0.19		
v/c Ratio	0.74	0.82		0.89	0.44	0.04	0.89	0.63	0.35	0.42	0.86	
Uniform Delay, d1	64.0	65.3		61.6	57.7	54.1	48.7	25.6	21.1	21.7	37.4	
Progression Factor	1.00	1.00		0.76	0.98	1.08	1.25	0.67	0.17	0.99	0.83	
Incremental Delay, d2	7.0	13.1		14.1	0.5	0.1	26.6	1.0	1.0	1.6	4.2	
Delay (s)	70.9	78.4		61.2	56.8	58.2	87.3	18.1	4.7	23.1	35.2	
Level of Service	E	E		E	E	E	F	B	A	C	D	
Approach Delay (s)		74.9			59.6			22.3			34.7	
Approach LOS		E			E			C			C	

Intersection Summary			
HCM Average Control Delay	37.4	HCM Level of Service	D
HCM Volume to Capacity ratio	0.86		
Actuated Cycle Length (s)	150.0	Sum of lost time (s)	18.0
Intersection Capacity Utilization	91.3%	ICU Level of Service	F
Analysis Period (min)	15		
c Critical Lane Group			

Movement	EBL	EBT	EBR	WBL	WBT	WBR	NBL	NBT	NBR	SBL	SBT	SBR
Lane Configurations												
Volume (vph)	0	0	0	165	2	205	255	2100	0	0	1720	516
Ideal Flow (vphpl)	1900	1900	1900	1900	1900	1900	1900	1900	1900	1900	1900	1900
Total Lost time (s)				6.0	6.0	6.0	6.0	6.0			6.0	6.0
Lane Util. Factor				0.95	0.95	1.00	0.97	0.86			0.81	1.00
Frt				1.00	1.00	0.85	1.00	1.00			1.00	0.85
Flt Protected				0.95	0.95	1.00	0.95	1.00			1.00	1.00
Satd. Flow (prot)				1681	1687	1583	3433	6408			7544	1583
Flt Permitted				0.95	0.95	1.00	0.95	1.00			1.00	1.00
Satd. Flow (perm)				1681	1687	1583	3433	6408			7544	1583
Peak-hour factor, PHF	0.95	0.95	0.95	0.95	0.95	0.95	0.95	0.95	0.95	0.95	0.95	0.95
Adj. Flow (vph)	0	0	0	174	2	216	268	2211	0	0	1811	543
RTOR Reduction (vph)	0	0	0	0	0	8	0	0	0	0	0	217
Lane Group Flow (vph)	0	0	0	89	87	208	268	2211	0	0	1811	326
Turn Type				Perm		Perm	Prot					Perm
Protected Phases					8		5	2			6	
Permitted Phases				8		8						6
Actuated Green, G (s)				25.0	25.0	25.0	17.0	113.0			90.0	90.0
Effective Green, g (s)				25.0	25.0	25.0	17.0	113.0			90.0	90.0
Actuated g/C Ratio				0.17	0.17	0.17	0.11	0.75			0.60	0.60
Clearance Time (s)				6.0	6.0	6.0	6.0	6.0			6.0	6.0
Vehicle Extension (s)				3.0	3.0	3.0	3.0	3.0			3.0	3.0
Lane Grp Cap (vph)				280	281	264	389	4827			4526	950
v/s Ratio Prot							c0.08	c0.35			0.24	
v/s Ratio Perm				0.05	0.05	c0.13						0.21
v/c Ratio				0.32	0.31	0.79	0.69	0.46			0.40	0.34
Uniform Delay, d1				55.0	54.9	59.9	64.0	7.0			15.8	15.1
Progression Factor				1.00	1.00	1.00	0.80	0.59			0.26	0.46
Incremental Delay, d2				0.7	0.6	14.3	4.7	0.3			0.1	0.5
Delay (s)				55.7	55.5	74.2	56.0	4.4			4.2	7.4
Level of Service				E	E	E	E	A			A	A
Approach Delay (s)		0.0			65.9			9.9			5.0	
Approach LOS		A			E			A			A	

Intersection Summary			
HCM Average Control Delay	11.9	HCM Level of Service	B
HCM Volume to Capacity ratio	0.53		
Actuated Cycle Length (s)	150.0	Sum of lost time (s)	12.0
Intersection Capacity Utilization	58.8%	ICU Level of Service	B
Analysis Period (min)	15		
c Critical Lane Group			

Movement	EBL	EBT	EBR	WBL	WBT	WBR	NBL	NBT	NBR	SBL	SBT	SBR
Lane Configurations												
Volume (vph)	332	0	166	0	0	0	0	2008	228	142	1767	0
Ideal Flow (vphpl)	1900	1900	1900	1900	1900	1900	1900	1900	1900	1900	1900	1900
Total Lost time (s)	6.0		6.0					6.0		6.0	6.0	
Lane Util. Factor	0.97		0.88					0.76		0.97	0.91	
Frt	1.00		0.85					0.98		1.00	1.00	
Flt Protected	0.95		1.00					1.00		0.95	1.00	
Satd. Flow (prot)	3433		2787					8364		3433	5085	
Flt Permitted	0.95		1.00					1.00		0.95	1.00	
Satd. Flow (perm)	3433		2787					8364		3433	5085	
Peak-hour factor, PHF	0.95	0.95	0.95	0.95	0.95	0.95	0.95	0.95	0.95	0.95	0.95	0.95
Adj. Flow (vph)	349	0	175	0	0	0	0	2114	240	149	1860	0
RTOR Reduction (vph)	0	0	40	0	0	0	0	9	0	0	0	0
Lane Group Flow (vph)	349	0	135	0	0	0	0	2345	0	149	1860	0
Turn Type	custom		custom							Prot		
Protected Phases								2		1	6	
Permitted Phases	4		4									
Actuated Green, G (s)	20.9		20.9					99.3		11.8	117.1	
Effective Green, g (s)	20.9		20.9					99.3		11.8	117.1	
Actuated g/C Ratio	0.14		0.14					0.66		0.08	0.78	
Clearance Time (s)	6.0		6.0					6.0		6.0	6.0	
Vehicle Extension (s)	3.0		3.0					3.0		3.0	3.0	
Lane Grp Cap (vph)	478		388					5537		270	3970	
v/s Ratio Prot								0.28		0.04	c0.37	
v/s Ratio Perm	c0.10		0.05									
v/c Ratio	0.73		0.35					0.42		0.55	0.47	
Uniform Delay, d1	61.8		58.4					11.9		66.6	5.7	
Progression Factor	1.00		1.00					1.00		0.86	0.99	
Incremental Delay, d2	5.7		0.5					0.2		2.3	0.4	
Delay (s)	67.5		58.9					12.1		59.4	6.0	
Level of Service	E		E					B		E	A	
Approach Delay (s)		64.6			0.0			12.1			10.0	
Approach LOS		E			A			B			A	

Intersection Summary			
HCM Average Control Delay	16.9	HCM Level of Service	B
HCM Volume to Capacity ratio	0.51		
Actuated Cycle Length (s)	150.0	Sum of lost time (s)	12.0
Intersection Capacity Utilization	58.8%	ICU Level of Service	B
Analysis Period (min)	15		
c Critical Lane Group			

Movement	WBL	WBR	NBT	NBR	SBL	SBT
Lane Configurations						
Volume (vph)	25	50	759	6	50	1148
Ideal Flow (vphpl)	1900	1900	1900	1900	1900	1900
Total Lost time (s)	6.0		6.0			6.0
Lane Util. Factor	1.00		0.95			0.95
Frt	0.91		1.00			1.00
Flt Protected	0.98		1.00			1.00
Satd. Flow (prot)	1667		3535			3532
Flt Permitted	0.98		1.00			0.86
Satd. Flow (perm)	1667		3535			3040
Peak-hour factor, PHF	0.95	0.95	0.95	0.95	0.95	0.95
Adj. Flow (vph)	26	53	799	6	53	1208
RTOR Reduction (vph)	49	0	0	0	0	0
Lane Group Flow (vph)	30	0	805	0	0	1261
Turn Type					pm+pt	
Protected Phases	8		2		1	6
Permitted Phases					6	
Actuated Green, G (s)	10.2		127.8			127.8
Effective Green, g (s)	10.2		127.8			127.8
Actuated g/C Ratio	0.07		0.85			0.85
Clearance Time (s)	6.0		6.0			6.0
Vehicle Extension (s)	3.0		3.0			3.0
Lane Grp Cap (vph)	113		3012			2590
v/s Ratio Prot	c0.02		0.23			
v/s Ratio Perm						c0.41
v/c Ratio	0.26		0.27			0.49
Uniform Delay, d1	66.3		2.1			2.8
Progression Factor	1.00		0.25			0.12
Incremental Delay, d2	1.2		0.2			0.0
Delay (s)	67.6		0.7			0.4
Level of Service	E		A			A
Approach Delay (s)	67.6		0.7			0.4
Approach LOS	E		A			A

Intersection Summary			
HCM Average Control Delay	3.0	HCM Level of Service	A
HCM Volume to Capacity ratio	0.47		
Actuated Cycle Length (s)	150.0	Sum of lost time (s)	12.0
Intersection Capacity Utilization	73.8%	ICU Level of Service	D
Analysis Period (min)	15		
c Critical Lane Group			

Movement	EBL	EBT	EBR	WBL	WBT	WBR	NBL	NBT	NBR	SBL	SBT	SBR
Lane Configurations												
Volume (vph)	174	50	59	50	50	50	53	2626	21	50	2348	172
Ideal Flow (vphpl)	1900	1900	1900	1900	1900	1900	1900	1900	1900	1900	1900	1900
Total Lost time (s)		6.0	6.0		6.0		6.0	6.0		6.0	6.0	
Lane Util. Factor		1.00	1.00		1.00		1.00	0.86		1.00	0.86	
Frt		1.00	0.85		0.95		1.00	1.00		1.00	0.99	
Flt Protected		0.96	1.00		0.98		0.95	1.00		0.95	1.00	
Satd. Flow (prot)		1793	1583		1750		1770	6400		1770	6342	
Flt Permitted		0.61	1.00		0.62		0.95	1.00		0.95	1.00	
Satd. Flow (perm)		1142	1583		1107		1770	6400		1770	6342	
Peak-hour factor, PHF	0.95	0.95	0.95	0.95	0.95	0.95	0.95	0.95	0.95	0.95	0.95	0.95
Adj. Flow (vph)	183	53	62	53	53	53	56	2764	22	53	2472	181
RTOR Reduction (vph)	0	0	47	0	13	0	0	0	0	0	6	0
Lane Group Flow (vph)	0	236	15	0	146	0	56	2786	0	53	2647	0
Turn Type	Perm		Perm	Perm			Prot			Prot		
Protected Phases		4			8		5	2		1	6	
Permitted Phases	4		4	8								
Actuated Green, G (s)		35.8	35.8		35.8		8.1	88.3		7.9	88.1	
Effective Green, g (s)		35.8	35.8		35.8		8.1	88.3		7.9	88.1	
Actuated g/C Ratio		0.24	0.24		0.24		0.05	0.59		0.05	0.59	
Clearance Time (s)		6.0	6.0		6.0		6.0	6.0		6.0	6.0	
Vehicle Extension (s)		3.0	3.0		3.0		3.0	3.0		3.0	3.0	
Lane Grp Cap (vph)		273	378		264		96	3767		93	3725	
v/s Ratio Prot							c0.03	c0.44		0.03	0.42	
v/s Ratio Perm		c0.21	0.01		0.13							
v/c Ratio		0.86	0.04		0.55		0.58	0.74		0.57	0.71	
Uniform Delay, d1		54.8	43.9		50.1		69.3	22.5		69.4	21.9	
Progression Factor		1.00	1.00		1.00		1.26	0.44		0.97	0.97	
Incremental Delay, d2		23.5	0.0		2.5		5.7	0.9		2.4	0.4	
Delay (s)		78.3	43.9		52.6		93.1	10.6		69.5	21.7	
Level of Service		E	D		D		F	B		E	C	
Approach Delay (s)		71.2			52.6			12.3			22.6	
Approach LOS		E			D			B			C	

Intersection Summary			
HCM Average Control Delay	20.9	HCM Level of Service	C
HCM Volume to Capacity ratio	0.73		
Actuated Cycle Length (s)	150.0	Sum of lost time (s)	12.0
Intersection Capacity Utilization	73.0%	ICU Level of Service	C
Analysis Period (min)	15		
c Critical Lane Group			

Movement	WBL	WBR	NBT	NBR	SBL	SBT
Lane Configurations						
Volume (veh/h)	0	109	1066	157	0	1328
Sign Control	Stop		Free			Free
Grade	0%		0%			0%
Peak Hour Factor	0.95	0.95	0.95	0.95	0.95	0.95
Hourly flow rate (vph)	0	115	1122	165	0	1398
Pedestrians						
Lane Width (ft)						
Walking Speed (ft/s)						
Percent Blockage						
Right turn flare (veh)						
Median type			None			None
Median storage veh)						
Upstream signal (ft)			1039			442
pX, platoon unblocked	0.90	0.82			0.82	
vC, conflicting volume	1671	457			1287	
vC1, stage 1 conf vol						
vC2, stage 2 conf vol						
vCu, unblocked vol	119	0			584	
tC, single (s)	6.8	6.9			4.1	
tC, 2 stage (s)						
tF (s)	3.5	3.3			2.2	
p0 queue free %	100	87			100	
cM capacity (veh/h)	781	890			809	

Direction, Lane #	WB 1	NB 1	NB 2	NB 3	SB 1	SB 2	SB 3
Volume Total	115	449	449	390	466	466	466
Volume Left	0	0	0	0	0	0	0
Volume Right	115	0	0	165	0	0	0
cSH	890	1700	1700	1700	1700	1700	1700
Volume to Capacity	0.13	0.26	0.26	0.23	0.27	0.27	0.27
Queue Length 95th (ft)	11	0	0	0	0	0	0
Control Delay (s)	9.6	0.0	0.0	0.0	0.0	0.0	0.0
Lane LOS	A						
Approach Delay (s)	9.6	0.0			0.0		
Approach LOS	A						

Intersection Summary			
Average Delay	0.4		
Intersection Capacity Utilization	37.5%	ICU Level of Service	A
Analysis Period (min)	15		

Movement	EBL	EBT	EBR	WBL	WBT	WBR	NBL	NBT	NBR	SBL	SBT	SBR
Lane Configurations												
Volume (vph)	10	45	97	38	21	58	6	2440	35	63	2445	149
Ideal Flow (vphpl)	1900	1900	1900	1900	1900	1900	1900	1900	1900	1900	1900	1900
Total Lost time (s)	6.0	6.0		6.0	6.0		6.0	6.0		6.0	6.0	
Lane Util. Factor	1.00	1.00		1.00	1.00		1.00	0.91		1.00	0.91	
Frt	1.00	0.90		1.00	0.89		1.00	1.00		1.00	0.99	
Flt Protected	0.95	1.00		0.95	1.00		0.95	1.00		0.95	1.00	
Satd. Flow (prot)	1770	1671		1770	1657		1770	5074		1770	5041	
Flt Permitted	0.95	1.00		0.95	1.00		0.95	1.00		0.95	1.00	
Satd. Flow (perm)	1770	1671		1770	1657		1770	5074		1770	5041	
Peak-hour factor, PHF	0.95	0.95	0.95	0.95	0.95	0.95	0.95	0.95	0.95	0.95	0.95	0.95
Adj. Flow (vph)	11	47	102	40	22	61	6	2568	37	66	2574	157
RTOR Reduction (vph)	0	53	0	0	57	0	0	1	0	0	4	0
Lane Group Flow (vph)	11	96	0	40	26	0	6	2604	0	66	2727	0
Turn Type	Split			Split			Prot			Prot		
Protected Phases	4	4		8	8		5	2		1	6	
Permitted Phases												
Actuated Green, G (s)	12.7	12.7		10.7	10.7		0.8	93.7		8.9	101.8	
Effective Green, g (s)	12.7	12.7		10.7	10.7		0.8	93.7		8.9	101.8	
Actuated g/C Ratio	0.08	0.08		0.07	0.07		0.01	0.62		0.06	0.68	
Clearance Time (s)	6.0	6.0		6.0	6.0		6.0	6.0		6.0	6.0	
Vehicle Extension (s)	3.0	3.0		3.0	3.0		3.0	3.0		3.0	3.0	
Lane Grp Cap (vph)	150	141		126	118		9	3170		105	3421	
v/s Ratio Prot	0.01	c0.06		c0.02	0.02		0.00	c0.51		c0.04	c0.54	
v/s Ratio Perm												
v/c Ratio	0.07	0.68		0.32	0.22		0.67	0.82		0.63	0.80	
Uniform Delay, d1	63.2	66.7		66.2	65.7		74.5	21.7		68.9	16.9	
Progression Factor	1.07	1.13		1.00	1.00		1.11	0.64		1.21	0.47	
Incremental Delay, d2	0.2	12.7		1.5	1.0		74.3	1.5		4.3	0.8	
Delay (s)	68.2	87.8		67.6	66.7		157.2	15.3		88.0	8.6	
Level of Service	E	F		E	E		F	B		F	A	
Approach Delay (s)		86.4			67.0			15.6			10.5	
Approach LOS		F			E			B			B	

Intersection Summary			
HCM Average Control Delay	16.2	HCM Level of Service	B
HCM Volume to Capacity ratio	0.80		
Actuated Cycle Length (s)	150.0	Sum of lost time (s)	30.0
Intersection Capacity Utilization	79.0%	ICU Level of Service	D
Analysis Period (min)	15		
c Critical Lane Group			

Movement	EBL	EBT	EBR	WBL	WBT	WBR	NBL	NBT	NBR	SBL	SBT	SBR
Lane Configurations												
Volume (veh/h)	32	84	4	4	17	8	7	87	4	6	27	80
Sign Control		Free			Free			Stop			Stop	
Grade		0%			0%			0%			0%	
Peak Hour Factor	0.95	0.95	0.95	0.95	0.95	0.95	0.95	0.95	0.95	0.95	0.95	0.95
Hourly flow rate (vph)	34	88	4	4	18	8	7	92	4	6	28	84
Pedestrians												
Lane Width (ft)												
Walking Speed (ft/s)												
Percent Blockage												
Right turn flare (veh)												
Median type		None			None							
Median storage veh)												
Upstream signal (ft)		1018										
pX, platoon unblocked												
vC, conflicting volume	26			93			283	193	91	236	191	22
vC1, stage 1 conf vol												
vC2, stage 2 conf vol												
vCu, unblocked vol	26			93			283	193	91	236	191	22
tC, single (s)	4.1			4.1			7.1	6.5	6.2	7.1	6.5	6.2
tC, 2 stage (s)												
tF (s)	2.2			2.2			3.5	4.0	3.3	3.5	4.0	3.3
p0 queue free %	98			100			99	87	100	99	96	92
cM capacity (veh/h)	1588			1502			586	686	967	630	687	1055

Direction, Lane #	EB 1	EB 2	WB 1	WB 2	NB 1	NB 2	SB 1
Volume Total	34	93	4	26	7	96	119
Volume Left	34	0	4	0	7	0	6
Volume Right	0	4	0	8	0	4	84
cSH	1588	1700	1502	1700	586	695	907
Volume to Capacity	0.02	0.05	0.00	0.02	0.01	0.14	0.13
Queue Length 95th (ft)	2	0	0	0	1	12	11
Control Delay (s)	7.3	0.0	7.4	0.0	11.2	11.0	9.6
Lane LOS	A		A		B	B	A
Approach Delay (s)	2.0		1.0		11.0		9.6
Approach LOS					B		A

Intersection Summary			
Average Delay	6.7		
Intersection Capacity Utilization	26.9%	ICU Level of Service	A
Analysis Period (min)	15		

Movement	EBL	EBT	EBR	WBL	WBT	WBR	NBL	NBT	NBR	SBL	SBT	SBR
Lane Configurations												
Volume (vph)	50	819	50	50	918	52	50	8	7	19	11	30
Ideal Flow (vphpl)	1900	1900	1900	1900	1900	1900	1900	1900	1900	1900	1900	1900
Total Lost time (s)	6.0	6.0	6.0	6.0	6.0			6.0	6.0	6.0	6.0	
Lane Util. Factor	1.00	0.95	1.00	1.00	0.95			1.00	1.00	1.00	1.00	
Frt	1.00	1.00	0.85	1.00	0.99			1.00	0.85	1.00	0.89	
Flt Protected	0.95	1.00	1.00	0.95	1.00			0.96	1.00	0.95	1.00	
Satd. Flow (prot)	1770	3539	1583	1770	3511			1785	1583	1770	1660	
Flt Permitted	0.28	1.00	1.00	0.17	1.00			0.77	1.00	0.72	1.00	
Satd. Flow (perm)	523	3539	1583	315	3511			1432	1583	1336	1660	
Peak-hour factor, PHF	0.95	0.95	0.95	0.95	0.95	0.95	0.95	0.95	0.95	0.95	0.95	0.95
Adj. Flow (vph)	53	862	53	53	966	55	53	8	7	20	12	32
RTOR Reduction (vph)	0	0	34	0	7	0	0	0	5	0	21	0
Lane Group Flow (vph)	53	862	19	53	1015	0	0	61	2	20	23	0
Turn Type	Perm		Perm	pm+pt			Perm		Perm	Perm		
Protected Phases		4		3	8			2			6	
Permitted Phases	4		4	8			2		2	6		
Actuated Green, G (s)	27.2	27.2	27.2	37.5	37.5			25.5	25.5	25.5	25.5	
Effective Green, g (s)	27.2	27.2	27.2	37.5	37.5			25.5	25.5	25.5	25.5	
Actuated g/C Ratio	0.36	0.36	0.36	0.50	0.50			0.34	0.34	0.34	0.34	
Clearance Time (s)	6.0	6.0	6.0	6.0	6.0			6.0	6.0	6.0	6.0	
Vehicle Extension (s)	3.0	3.0	3.0	3.0	3.0			3.0	3.0	3.0	3.0	
Lane Grp Cap (vph)	190	1283	574	241	1756			487	538	454	564	
v/s Ratio Prot		c0.24		0.01	c0.29						0.01	
v/s Ratio Perm	0.10		0.01	0.10				c0.04	0.00	0.01		
v/c Ratio	0.28	0.67	0.03	0.22	0.58			0.13	0.00	0.04	0.04	
Uniform Delay, d1	16.9	20.1	15.4	11.6	13.2			17.1	16.4	16.6	16.6	
Progression Factor	0.89	0.93	1.41	1.40	1.93			1.00	1.00	0.99	0.97	
Incremental Delay, d2	0.3	0.6	0.0	0.3	0.3			0.5	0.0	0.2	0.1	
Delay (s)	15.5	19.2	21.8	16.5	25.8			17.6	16.4	16.5	16.2	
Level of Service	B	B	C	B	C			B	B	B	B	
Approach Delay (s)		19.1			25.4			17.5			16.3	
Approach LOS		B			C			B			B	

Intersection Summary			
HCM Average Control Delay	22.1	HCM Level of Service	C
HCM Volume to Capacity ratio	0.46		
Actuated Cycle Length (s)	75.0	Sum of lost time (s)	18.0
Intersection Capacity Utilization	55.2%	ICU Level of Service	B
Analysis Period (min)	15		
c Critical Lane Group			

Movement	EBL	EBT	EBR	WBL	WBT	WBR	NBL	NBT	NBR	SBL	SBT	SBR
Lane Configurations												
Volume (vph)	150	11	155	14	5	100	125	3177	100	100	3117	149
Ideal Flow (vphpl)	1900	1900	1900	1900	1900	1900	1900	1900	1900	1900	1900	1900
Total Lost time (s)		6.0		6.0	6.0	6.0	6.0	6.0	6.0	6.0	6.0	6.0
Lane Util. Factor		0.95		1.00	1.00	1.00	1.00	0.91	1.00	1.00	0.91	1.00
Frt		0.93		1.00	1.00	0.85	1.00	1.00	0.85	1.00	1.00	0.85
Flt Protected		0.98		0.95	1.00	1.00	0.95	1.00	1.00	0.95	1.00	1.00
Satd. Flow (prot)		3203		1770	1863	1583	1770	5085	1583	1770	5085	1583
Flt Permitted		0.82		0.22	1.00	1.00	0.04	1.00	1.00	0.04	1.00	1.00
Satd. Flow (perm)		2689		411	1863	1583	76	5085	1583	77	5085	1583
Peak-hour factor, PHF	0.95	0.95	0.95	0.95	0.95	0.95	0.95	0.95	0.95	0.95	0.95	0.95
Adj. Flow (vph)	158	12	163	15	5	105	132	3344	105	105	3281	157
RTOR Reduction (vph)	0	71	0	0	0	44	0	0	24	0	0	37
Lane Group Flow (vph)	0	262	0	15	5	61	132	3344	81	105	3281	120
Turn Type	Perm			pm+pt		Perm	pm+pt		Perm	pm+pt		Perm
Protected Phases		4		3	8		5	2		1	6	
Permitted Phases	4			8		8	2		2	6		6
Actuated Green, G (s)		17.8		25.4	25.4	25.4	108.8	98.6	98.6	104.4	96.4	96.4
Effective Green, g (s)		17.8		25.4	25.4	25.4	108.8	98.6	98.6	104.4	96.4	96.4
Actuated g/C Ratio		0.12		0.17	0.17	0.17	0.73	0.66	0.66	0.70	0.64	0.64
Clearance Time (s)		6.0		6.0	6.0	6.0	6.0	6.0	6.0	6.0	6.0	6.0
Vehicle Extension (s)		3.0		3.0	3.0	3.0	3.0	3.0	3.0	3.0	3.0	3.0
Lane Grp Cap (vph)		319		84	315	268	170	3343	1041	144	3268	1017
v/s Ratio Prot				0.00	0.00		c0.05	c0.66		0.04	0.65	
v/s Ratio Perm		c0.10		0.03		c0.04	0.51		0.05	0.47		0.08
v/c Ratio		0.82		0.18	0.02	0.23	0.78	1.00	0.08	0.73	1.00	0.12
Uniform Delay, d1		64.6		52.9	51.9	53.8	51.5	25.7	9.3	71.5	26.8	10.4
Progression Factor		0.97		1.00	1.00	1.00	1.31	0.69	0.80	1.27	0.81	0.54
Incremental Delay, d2		14.2		1.0	0.0	0.4	15.9	13.9	0.1	11.0	13.4	0.1
Delay (s)		77.1		53.9	51.9	54.3	83.6	31.6	7.6	101.5	35.2	5.7
Level of Service		E		D	D	D	F	C	A	F	D	A
Approach Delay (s)		77.1			54.1			32.9			35.8	
Approach LOS		E			D			C			D	

Intersection Summary			
HCM Average Control Delay	36.5	HCM Level of Service	D
HCM Volume to Capacity ratio	0.93		
Actuated Cycle Length (s)	150.0	Sum of lost time (s)	18.0
Intersection Capacity Utilization	97.1%	ICU Level of Service	F
Analysis Period (min)	15		
c Critical Lane Group			

Movement	NBL	NBT	NBR2	SBL	SBT	SBR2	NEL	NER2	SWL	SWR2
Lane Configurations										
Volume (vph)	252	107	291	76	328	103	125	367	422	81
Ideal Flow (vphpl)	1900	1900	1900	1900	1900	1900	1900	1900	1900	1900
Total Lost time (s)	6.0	6.0	6.0	6.0	6.0	6.0	6.0	6.0	6.0	6.0
Lane Util. Factor	0.97	0.95	1.00	0.97	0.95	1.00	0.97	1.00	0.97	1.00
Frt	1.00	1.00	0.85	1.00	1.00	0.85	1.00	0.85	1.00	0.85
Flt Protected	0.95	1.00	1.00	0.95	1.00	1.00	0.95	1.00	0.95	1.00
Satd. Flow (prot)	3433	3539	1583	3433	3539	1583	3433	1583	3433	1583
Flt Permitted	0.95	1.00	1.00	0.95	1.00	1.00	0.95	1.00	0.95	1.00
Satd. Flow (perm)	3433	3539	1583	3433	3539	1583	3433	1583	3433	1583
Peak-hour factor, PHF	0.95	0.95	0.95	0.95	0.95	0.95	0.95	0.95	0.95	0.95
Adj. Flow (vph)	265	113	306	80	345	108	132	386	444	85
RTOR Reduction (vph)	0	0	204	0	0	72	0	257	0	57
Lane Group Flow (vph)	265	113	102	80	345	36	132	129	444	28
Turn Type	Prot		Perm	Prot		Perm	Prot	custom	Prot	custom
Protected Phases	5	2		1	6		4		8	
Permitted Phases			2			6		2		6
Actuated Green, G (s)	16.0	25.0	25.0	16.0	25.0	25.0	16.0	25.0	16.0	25.0
Effective Green, g (s)	16.0	25.0	25.0	16.0	25.0	25.0	16.0	25.0	16.0	25.0
Actuated g/C Ratio	0.21	0.33	0.33	0.21	0.33	0.33	0.21	0.33	0.21	0.33
Clearance Time (s)	6.0	6.0	6.0	6.0	6.0	6.0	6.0	6.0	6.0	6.0
Vehicle Extension (s)	3.0	3.0	3.0	3.0	3.0	3.0	3.0	3.0	3.0	3.0
Lane Grp Cap (vph)	732	1180	528	732	1180	528	732	528	732	528
v/s Ratio Prot	c0.08	0.03		0.02	c0.10		0.04		c0.13	
v/s Ratio Perm			0.06			0.02		0.08		0.02
v/c Ratio	0.36	0.10	0.19	0.11	0.29	0.07	0.18	0.24	0.61	0.05
Uniform Delay, d1	25.1	17.2	17.8	23.8	18.5	17.1	24.1	18.1	26.7	17.0
Progression Factor	1.07	0.80	2.98	1.00	1.00	1.00	1.12	7.19	1.00	1.00
Incremental Delay, d2	1.2	0.1	0.7	0.3	0.6	0.2	0.5	0.9	3.7	0.2
Delay (s)	28.1	13.9	53.9	24.1	19.1	17.3	27.6	131.4	30.4	17.2
Level of Service	C	B	D	C	B	B	C	F	C	B
Approach Delay (s)		37.3			19.5					
Approach LOS		D			B					

Intersection Summary			
HCM Average Control Delay	46.5	HCM Level of Service	D
HCM Volume to Capacity ratio	0.40		
Actuated Cycle Length (s)	75.0	Sum of lost time (s)	18.0
Intersection Capacity Utilization	57.2%	ICU Level of Service	B
Analysis Period (min)	15		
c Critical Lane Group			