CABIN BRANCH SWM RETROFITS: TASK ORDER 16

COLLINGWOOD HOA - ASSET 10824

GOSHEN ESTATES, BLOCK V, PARCEL A

90% FINAL DESIGN

May 15, 2015

GENERAL NOTES

1. THE CONTRACTOR WILL IMMEDIATELY INFORM THE COUNTY OF ANY DISCREPANCIES FOUND BETWEEN THE PROJECT PLANS AND CONTRACT SPECIFICATIONS.
2. FOR CONSTRUCTION, ALL HORIZONTAL CONTROL SHALL BE NAD 83/91 AND VERTICAL CONTROL NAVD 88.
3. TYPES OF STORM DRAIN STRUCTURES REFER TO THE 'DESIGN STANDARDS' OF MONTGOMERY COUNTY DEPARTMENT OF TRANSPORTATION, UNLESS OTHERWISE NOTED.
4. INFORMATION CONCERNING UNDERGROUND UTILITIES WAS OBTAINED FROM AVAILABLE RECORDS, THE CONTRACTOR MUST DETERMINE THE EXACT LOCATION AND ELEVATIONS OF THE LINES BY DIGGING TEST PITS BY HAND AT ALL UTILITY CROSSINGS WELL IN ADVANCE OF TRENCHING. IF CLEARANCES ARE LESS THAN SHOWN ON THIS PLAN OR SIX INCHES, WHICHEVER IS LESS, THE CONTRACTOR SHALL CONTACT THE COUNTY.
5. REPAIRS TO UTILITIES OR PROPERTY DAMAGED AS A RESULT OF THE CONTRACTOR'S NEGLIGENCE OR METHOD OF OPERATION MUST BE MADE AT THE CONTRACTOR'S EXPENSE BEFORE PROCEEDING WITH CONSTRUCTION.
6. CALL "MISS UTILITY" AT 1-800-257-7777 FOURTY-EIGHT (48) HOURS PRIOR TO BEGINNING EXCAVATION TO DETERMINE THE EXACT LOCATION OF EXISTING UTILITIES.
7. CLEARING TO BE LIMITED TO THE "LIMIT OF DISTURBANCE" AS SHOWN ON THE PLANS.
8. ALL GRADING SHALL BE DONE IN SUCH A MANNER AS TO PROVIDE POSITIVE DRAINAGE.
9. DISTURBED AREAS ADJACENT TO ESTABLISHED LAWNS SHALL BE SODDED. OTHER DISTURBED AREAS SHALL BE SEEDED AND MULCHED.
10. THE CONTRACTOR SHALL OBTAIN A ROADSIDE TREE PERMIT FOR ANY MAINTENANCE, TREATMENT, PLANTING, REMOVAL OR ROOT CUTTING ON TREES WITHIN THE PUBLIC RIGHT-OF-WAY BEFORE STARTING A JOB. PERMIT REQUIREMENTS MAY BE OBTAINED FROM THE DEPARTMENT OF NATURAL RESOURCES – MARYLAND FOREST, PARK AND WILDLIFE SERVICE WHOSE TELEPHONE NUMBER IS (301) 854-6060.
11. CONTACT THE WASHINGTON SUBURBAN SANITARY COMMISSION SYSTEM MAINTENANCE ENGINEER BEFORE EXCAVATING BENEATH OR IN THE VICINITY OF EXISTING WATER OR SEWER LINES. BACKFILL TO BE DONE UNDER THE SUPERVISION OF W.S.S.C. CALL 301-699-4420.
12. CONTACT WASHINGTON GAS DISPATCH OFFICER AT (703) 750-4831 BEFORE EXCAVATING BENEATH OR IN THE VICINITY OF EXISTING GAS MAIN AND SERVICE LATERALS.
13. PRIOR TO VEGETATIVE STABILIZATION, ALL DISTURBED AREAS MUST BE TOPSOILED PER THE MONTGOMERY COUNTY "STANDARDS AND SPECIFICATIONS FOR TOPSOIL".

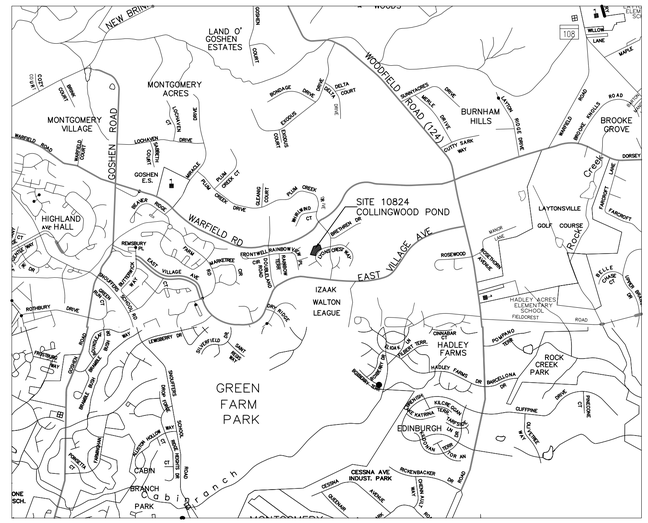

VICINITY MAP
1" = 2,000'

SHEET INDEX	
SHEET NO	DESCRIPTION
1	COVER SHEET
2	SWM AND ESC PLAN
3 – 4	SWM DETAILS
5 – 6	E&S NOTES AND DETAILS
7	BORING LOGS
8	LANDSCAPE PLAN

OWNER'S/DEVELOPER'S CERTIFICATION

I/We hereby certify that all clearing, grading, construction, and or development will be done pursuant to this plan and that any responsible personnel involved in the construction project will have a Certificate of Attendance at a Department of Natural Resources approved training program for the control of sediment and erosion before beginning the project.

Signature _____ Date _____

Printed Name and Title _____

DESIGN CERTIFICATION

I hereby certify that this plan has been prepared in accordance with the "2011 Maryland Standards and Specification for Soil Erosion and Sediment Control," Montgomery County Department of Permitting Services Executive Regulations 5-90, 7-02AM and 36-90, and Montgomery County Department of Public Works and Transportation "Storm Drain Design Criteria" dated August 1988.

Design Engineer Signature _____ Date _____

Printed Name _____ Registration Number _____

CERTIFICATION OF THE QUANTITIES

I hereby certify that the estimated total amount of excavation and fill as shown on these plans has been computed to 18 cubic yards of excavation, 0 cubic yards of fill and the total area to be disturbed as shown on these plans has been determined to be 10,634 square feet.

Signature _____ Date _____

Printed Name and Title _____ Registration Number _____

RELATED REQUIRED PERMITS

TO BE COMPLETED BY THE CONSULTATN AND PLACED ON THE FIRST SHEET OF THE SEDIMENT CONTROL/STORMWATER MANAGEMENT PLAN SET FOR ALL PROJECTS

IT IS THE RESPONSIBILITY OF PERMITTEE/OWNER OF THIS SITE TO OBTAIN ALL REQUIRED PERMITS PRIOR TO ISSUANCE OF THE APPROVED SEDIMENT CONTROL PERMIT:

TYPE OF PERMIT	REQ'D	NOT REQ'D	PERMIT NO.	EXPIRATION DATE	WORK RESTRICTION DATES
M.C.D.P.S. FLOODPLAIN DISTRICT		X			
WATERWAYS/WETLAND(S)					
a. CORPS OF ENGINEERS		X			
b. M.D.E.		X			
c. M.D.E. WATER QUALITY CERTIFICATION		X			
M.D.E. DAM SAFETY		X			
DNR ROADSIDE TREE CARE PERMIT	X			APPROVAL DATE	
DPS ROADSIDE TREE PROTECTION PLAN	X			APPROVAL DATE	
N.P.D.E.S. NOTICE OF INTENT		X			DATE FILED
OTHERS (PLEASE LIST):					
MNCPPC		X			
WSSC		X			
M.C.D.P.S. R.O.W.	X				

MONTGOMERY COUNTY PLANNING DEPARTMENT
THE MARYLAND-NATIONAL CAPITAL PARK AND PLANNING COMMISSION

February 27, 2013

Mr. Craig Carson
Montgomery County
Department of Environmental Protection
255 Rockville Pike, Suite 120
Rockville, MD 20850

Re: Forest Conservation Exemption Request
Property Name: Task #16; SWM Pond Retrofit, Collingwood HOA
Plan Number: 42013123E

Dear Mr. Carson:

Based on the review by staff of the Montgomery County Planning Department, the Forest Conservation Exemption Request submitted on February 20, 2013 for the plan identified above, is confirmed. The project site is exempt from Article II of the Montgomery County Code, Chapter 22A (Forest Conservation Law), Section 22A-5(t) because the site is a modification to an existing developed property: (1) the modification will not remove more than 5,000 square feet of forest, (2) does not affect any forest in a stream buffer or located on property in a special protection area which must submit a water quality plan and (3) the modification does not require approval of a new subdivision plan.

Any changes from the approved exemption request may constitute grounds to rescind or amend any approval actions taken and to take appropriate enforcement actions. If there are any subsequent modifications planned to the approved plan, a separate amendment must be submitted to M-NCPPC for review and approval prior to those activities occurring.

If you have any questions regarding these actions please feel free to contact me at 301-495-4712 or douglas.johnsen@montgomeryplanning.org.

Sincerely,

Doug Johnsen, RLA
MNCPPC
DARC Division

Cc: 42013123E
Eleanor T. Wilson (Century Engineering)

8787 Georgia Avenue, Silver Spring, Maryland 20910
Development Application and Regulatory Coordination Division: 301.495.4550 Fax: 301.495.1306
www.MontgomeryPlanning.org

28270.16

RECEIVED
OCT 31 2012
Century Engineering Inc.

MONTGOMERY COUNTY MARYLAND
DEPARTMENT OF PERMITTING SERVICES

Isiah Leggett
County Executive

Diane R. Schwartz Jones
Director

October 24, 2012

Mr. Robert Hurwitz
Century Engineering
10710 Gilroy Road
Hunt Valley, MD 21031

Re: Stormwater Management CONCEPT Request
for Collingwood Pond Retrofit # 16
Preliminary Plan #: N/A
SM File #: 246391
Tract Size/Zone: 1/R-200
Total Concept Area: 1ac
Parcel(s): N/A
Parcel(s): N/A
Watershed: Seneca Creek

Dear Mr. Hurwitz:

Based on a review by the Department of Permitting Services (DPS) Review Staff, the stormwater management concept for the above mentioned site is acceptable. The stormwater management concept consists of retrofitting an existing stormwater management structure to achieve what the Montgomery County Department of Environmental Protection (MCDEP) believes will be an additional environmental benefit. The project is not associated with new development, therefore it is not subject to minimum stormwater management treatment criteria. DPS will not review it for conformance with any such standards. Safe conveyance through the facility must be demonstrated.

The following **items and conditions** will need to be addressed during or prior to the detailed sediment control/stormwater management plan stage:

1. Prior to permanent vegetative stabilization, all disturbed areas must be topsoiled per the latest Montgomery County Standards and Specifications for topsoiling.
2. A detailed review of the conveyance computations will occur at the time of detailed plan review.
3. An engineered sediment control plan must be submitted for this project.
4. The proposed modifications will require the pond to meet the criteria of MD-378 including the required 2ft of freeboard above the proposed 100yr water surface elevation.
5. A report on the condition of the existing barrel pipe will be required. Any required repairs will be submitted as part of the detailed plan set.

This list may not be all-inclusive and may change based on available information at the time.

Payment of a stormwater management contribution in accordance with Section 2 of the Stormwater Management Regulation 4-90 is not required.

255 Rockville Pike, 2nd Floor • Rockville, Maryland 20850 • 240-777-6300 • 240-777-6256 TTY
www.montgomerycountymd.gov

311 240-773-3556 TTY

This letter must appear on the sediment control/stormwater management plan at its initial submittal. The concept approval is based on all stormwater management structures being located outside of the Public Utility Easement, the Public Improvement Easement, and the Public Right of Way unless specifically approved on the concept plan. Any divergence from the information provided to this office, or additional information received during the development process, or a change in an applicable Executive Regulation may constitute grounds to rescind or amend any approval actions taken, and to revaluate the site for additional or amended stormwater management requirements. If there are subsequent additions or modifications to the development, a separate concept request shall be required.

If you have any questions regarding these actions, please feel free to contact Thomas Weadon at 240-777-6309.

Sincerely,

Richard R. Brush, Manager
Water Resources Section
Division of Land Development Services

RRB: tw CN 246391

cc: SM File # 246391

ESD Acres: N/A
STRUCT Acres: N/A
WAIVED Acres: N/A

MONTGOMERY COUNTY DEPARTMENT OF PERMITTING SERVICES APPROVED FOR:		NOTE: MCDPS APPROVAL DOES NOT NEGATE THE NEED OF A MCDPS ACCESS PERMIT
STORMWATER MANAGEMENT: SWM RETROFIT	SEDIMENT CONTROL TECHNICAL REQUIREMENTS:	ADMINISTRATIVE REQUIREMENTS:
REVIEWED DATE	REVIEWED DATE	REVIEWED DATE
APPROVED DATE	APPROVED DATE	SEDIMENT CONTROL PERMIT NO.
246391 S.M.FILE NO.		MCDPS APPROVAL OF THIS PLAN WILL EXPIRE TWO YEARS FROM THE DATE OF APPROVAL IF THE PROJECT HAS NOT STARTED.

DPS APPROVAL OF A SEDIMENT CONTROL OR STORMWATER MANAGEMENT PLAN IS FOR DEMONSTRATED COMPLIANCE WITH MINIMUM ENVIRONMENTAL RUNOFF TREATMENT STANDARDS AND DOES NOT CREATE OR IMPLY ANY RIGHT TO DIVERT OR CONCENTRATE RUNOFF ONTO ANY ADJACENT PROPERTY WITHOUT THAT PROPERTY WITHOUT THAT PROPERTY OWNER'S PERMISSION. IT DOES NOT RELIEVE THE DESIGN ENGINEER OR OTHER RESPONSIBLE PERSON OF PROFESSIONAL LIABILITY OR ETHICAL RESPONSIBILITY FOR THE ADEQUACY OF THE DRAINAGE DESIGN AS IT AFFECTS UPHILL OR DOWNHILL PROPERTIES.

OWNER CONTACT:

Department of Environmental Protection
Montgomery County Maryland

MR. CRAIG CARSON
MONTGOMERY COUNTY DEPARTMENT OF ENVIRONMENTAL PROTECTION
255 ROCKVILLE PIKE
SUITE 120
ROCKVILLE, MD 20850
(240) 777-7713

CENTURY ENGINEERING
CONSULTING ENGINEERS – PLANNER
10710 GILROY ROAD
HUNT VALLEY, MD 21031

Biohabitats, Inc.
The Stables Building
2081 Clipper Park Road Baltimore MD 21211
tel: 410.554.0156 fax: 410.554.0168
www.biohabitats.com

MISS UTILITY

CALL "MISS UTILITY" AT 1-800-257-7777, 48 HOURS PRIOR TO THE START OF WORK. THE EXCAVATOR MUST NOTIFY ALL PUBLIC UTILITY COMPANIES WITH UNDERGROUND FACILITIES LOCATED BY THE UTILITY COMPANIES PRIOR TO COMMENCING EXCAVATION. THE EXCAVATOR IS RESPONSIBLE FOR COMPLIANCE WITH REQUIRMENTS OF CHAPTER 36A OF THE MONTGOMERY COUNTY CODE.

DATE	ISSUES/REVISIONS

GOSHEN BRANCH SWM RETROFIT
TASK ORDER 16
90% (FINAL) DESIGN

POTOMAC (10TH) ELECTION DISTRICT
MONTGOMERY COUNTY, MARYLAND

COLLINGWOOD COVER SHEET

PROJECT NO.: 28270.16	SCALE: SEE PLAN
DATE: 5/15/2015	BY: RT CHECK: TT
SEAL:	DWG. NO.:

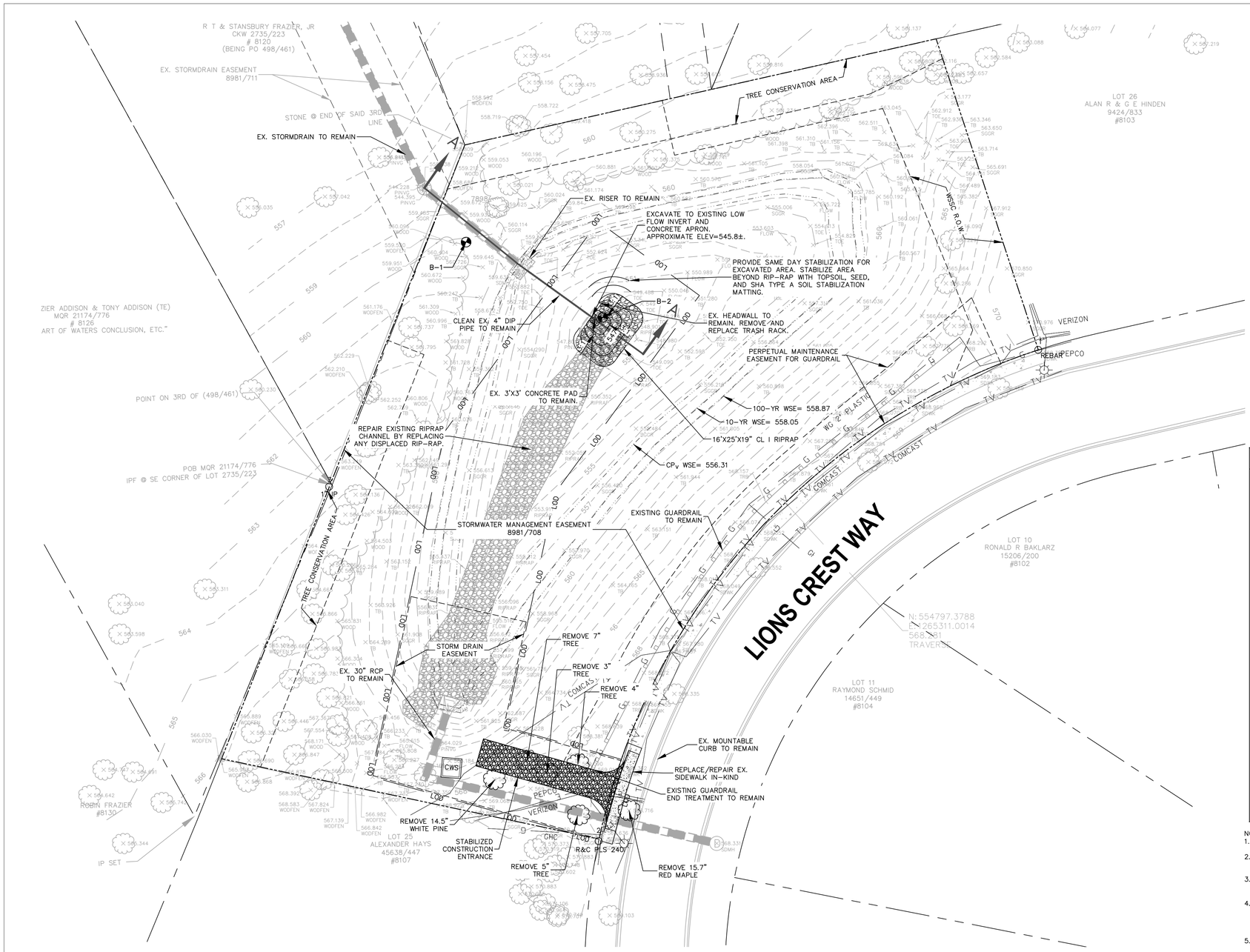

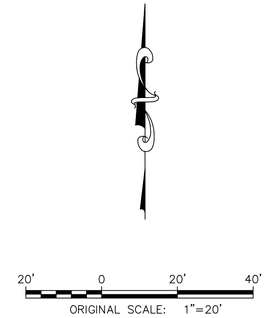

LEGEND

- EX. RIPRAP
- EXISTING TREE TO BE REMOVED
- EXISTING TREE TO BE REMAIN
- PROPERTY BOUNDARY
- 561 — PROPOSED CONTOUR
- 561 — EXISTING CONTOUR
- EASEMENT BOUNDARY
- BORING LOCATION
- PROPOSED STORMDRAIN PIPE
- EXISTING STORMDRAIN PIPE
- EXISTING GUARDRAIL TO BE REMOVED/REPLACED
- EXISTING GUARDRAIL TO REMAIN
- PROPOSED WATER SURFACE

NOTES:
1. TREES SPECIFIED TO BE REMOVED MUST BE REMOVED BY REMOVING ROOT STRUCTURE 2' MINIMUM BELOW EXISTING GRADE.
2. ALL DISTURBANCES IN THE COUNTY ROW MUST BE RESTORED TO EXISTING CONDITIONS UPON COMPLETION OF CONSTRUCTION. FEATURES WHICH MAY NEED TO BE RESTORED INCLUDE CURBING, LANDSCAPING, SIDEWALK, PAVING, AND OTHER FEATURES.
3. PEDESTRIAN TRAFFIC MUST BE PROVIDED FOR TEMPORARY SIDEWALK CLOSURE IN ACCORDANCE WITH THE COUNTY'S STANDARD "PEDESTRIAN CONTROL FOR TEMPORARY SIDEWALK CLOSURE".
4. SAME DAY STABILIZATION MUST BE PROVIDED FOR ALL DISTURBED AREAS. IF SAME DAY STABILIZATION CANNOT BE ACHIEVED, DISTURBED AREAS MUST DRAIN TO A MDE APPROVED SEDIMENT TRAPPING DEVICE. DISTURBED AREAS MUST BE PROTECTED TO PREVENT ANY SEDIMENT FROM ENTERING STORMDRAIN SYSTEM. ANY SEDIMENT WHICH MAY ENTER STORMDRAIN SYSTEM MUST BE REMOVED IMMEDIATELY.
5. SEE LANDSCAPE PLAN FOR LIMITS AND TYPE OF SEEDING. ALL SEEDING TO BE STABILIZED WITH SHA TYPE A SOIL STABILIZATION MATTING.

SURVEY CONTROL

COORDINATES AND ELEVATIONS ARE REFERRED TO THE MARYLAND COORDINATE SYSTEM (NAD 83/91 & NAVD88) VIA GPS AND TIED TO THE FOLLOWING SHA CONTROL:
GHN-1 N 543207.933 E 1257836.941 ELEV.=403.53
GHN-2 N 543572.372 E 1256402.980 ELEV.=390.41
WO-01 N 543565.033 E 1266962.846 ELEV.=539.23
WO-09 N 556766.568 E 1268878.125 ELEV.=558.94

TRAVERSE POINTS			
DESCRIPTION	NORTHING	EASTING	ELEVATION
PK NAIL	554510.4980	1265282.8020	569.656
REBAR & CAP	554798.4884	1265313.5320	568.281

MONTGOMERY COUNTY DEPARTMENT OF PERMITTING SERVICES APPROVED FOR:

NOTE: MCDPS APPROVAL DOES NOT NEGATE THE NEED OF A MCDPS ACCESS PERMIT

STORMWATER MANAGEMENT: SWM RETROFIT	SEDIMENT CONTROL TECHNICAL REQUIREMENTS:	ADMINISTRATIVE REQUIREMENTS:
REVIEWED DATE	REVIEWED DATE	REVIEWED DATE
APPROVED DATE	APPROVED DATE	SEDIMENT CONTROL PERMIT NO.
246391 S.M.FILE NO.		MCDPS APPROVAL OF THIS PLAN WILL EXPIRE TWO YEARS FROM THE DATE OF APPROVAL IF THE PROJECT HAS NOT STARTED.

DPS APPROVAL OF A SEDIMENT CONTROL OR STORMWATER MANAGEMENT PLAN IS FOR DEMONSTRATED COMPLIANCE WITH MINIMUM ENVIRONMENTAL RUNOFF TREATMENT STANDARDS AND DOES NOT CREATE OR IMPLY ANY RIGHT TO DIVERT OR CONCENTRATE RUNOFF ONTO ANY ADJACENT PROPERTY WITHOUT THAT PROPERTY WITHOUT THAT PROPERTY OWNER'S PERMISSION. IT DOES NOT RELIEVE THE DESIGN ENGINEER OR OTHER RESPONSIBLE PERSON OF PROFESSIONAL LIABILITY OR ETHICAL RESPONSIBILITY FOR THE ADEQUACY OF THE DRAINAGE DESIGN AS IT AFFECTS UPHILL OR DOWNHILL PROPERTIES.

OWNER CONTACT:

Department of Environmental Protection
Montgomery County Maryland

MR. CRAIG CARSON
MONTGOMERY COUNTY DEPARTMENT OF ENVIRONMENTAL PROTECTION
255 ROCKVILLE PIKE
SUITE 120
ROCKVILLE, MD 20850
(240) 777-7713

CENTURY ENGINEERING
CONSULTING ENGINEERS – PLANNER
10710 GILROY ROAD
HUNT VALLEY, MD 21031

Biohabitats, Inc.
The Stables Building
2081 Clipper Park Road Baltimore MD 21211
tel: 410.554.0156 fax: 410.554.0168
www.biohabitats.com

MISS UTILITY

CALL "MISS UTILITY" AT 1-800-257-7777, 48 HOURS PRIOR TO THE START OF WORK. THE EXCAVATOR MUST NOTIFY ALL PUBLIC UTILITY COMPANIES WITH UNDERGROUND FACILITIES LOCATED BY THE UTILITY COMPANIES PRIOR TO COMMENCING EXCAVATION. THE EXCAVATOR IS RESPONSIBLE FOR COMPLIANCE WITH REQUIRMENTS OF CHAPTER 36A OF THE MONTGOMERY COUNTY CODE.

DATE	ISSUES/REVISIONS

GOSHEN BRANCH SWM RETROFIT

TASK ORDER 16

90% (FINAL) DESIGN

POTOMAC (10TH) ELECTION DISTRICT
MONTGOMERY COUNTY, MARYLAND

COLLINGWOOD

STORMWATER MANAGEMENT PLAN

PROJECT NO.: 28270.16	SCALE: 1" =20'
DATE: 5/15/2015	BY: RT / CHECK: TT
SEAL:	DWG. NO.:

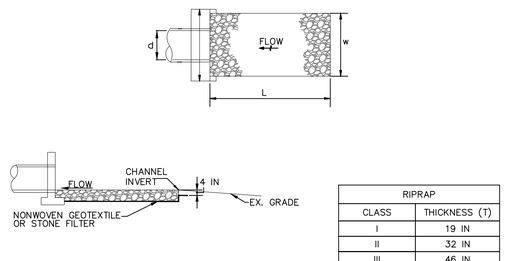

RIPRAP	
CLASS	THICKNESS (T)
I	19 IN
II	32 IN
III	46 IN

CONSTRUCTION SPECIFICATIONS

1. RIPRAP AND STONE MUST CONFORM TO THE SPECIFIED CLASS.
2. USE NONWOVEN GEOTEXTILE AS SPECIFIED IN SECTION H-I MATERIALS, AND PROTECT FROM PUNCTURING, CUTTING, OR TEARING. REPAIR ANY DAMAGE OTHER THAN AN OCCASIONAL SMALL HOLE BY PLACING ANOTHER PIECE OF GEOTEXTILE OVER THE DAMAGED PART OR BY COMPLETELY REPLACING THE GEOTEXTILE. PROVIDE A MINIMUM OF ONE FOOT OVERLAP FOR ALL REPAIRS AND FOR JOINING TWO PIECES OF GEOTEXTILE TOGETHER.
3. EXTEND GEOTEXTILE AT LEAST 6 INCHES BEYOND EDGES OF RIPRAP AND EMBED AT LEAST 4 INCHES AT SIDES OF RIPRAP.
4. PLACE RIPRAP IN A MANNER TO PREVENT DAMAGE TO THE STONE FILTER BLANKET OR GEOTEXTILE. HAND PLACE TO THE EXTENT NECESSARY.

RIP-RAP APRON DETAIL

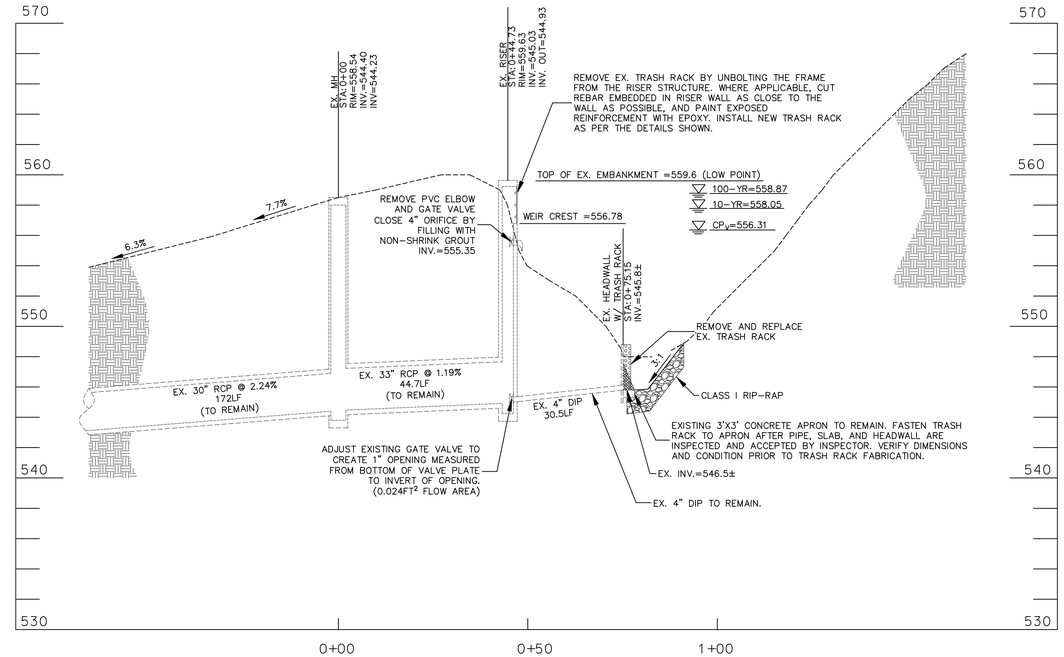

SECTION A-A
PRINCIPAL SPILLWAY
1"=20' HORZ.
1"=5' VERT.

NOTE: EXCAVATE TO EXPOSE EXISTING TRASH RACK, TOP OF CONCRETE SLAB, AND 4" OPENING IN HEADWALL. CONSTRUCTION INSPECTOR TO PROVIDE VISUAL INSPECTION OF PIPE, SLAB, AND HEADWALL. ANY ITEMS IN POOR CONDITION TO BE REPLACED PER THE CONSTRUCTION INSPECTOR. ALL ITEMS TO BE INSPECTED AND REPLACED IF NECESSARY PRIOR TO PLACEMENT OF TRASH RACK.

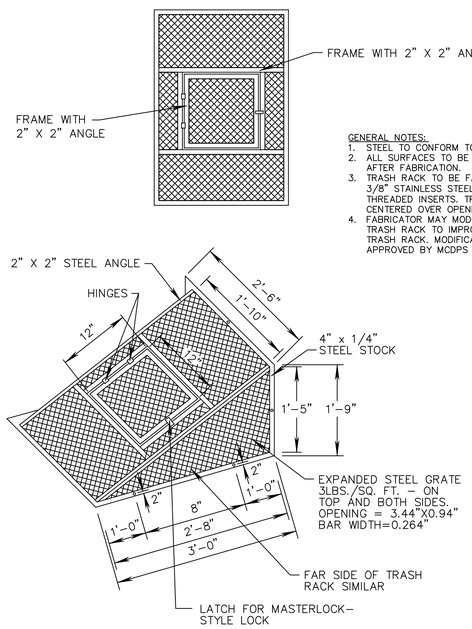

GENERAL NOTES:
1. STEEL TO CONFORM TO A-36.
2. ALL SURFACES TO BE HOT-DIPPED GALVANIZED AFTER FABRICATION.
3. TRASH RACK TO BE FASTENED TO WALL WITH 3/8" STAINLESS STEEL ANCHOR BOLTS AND THREADED INSERTS. TRASH RACK TO BE CENTERED OVER OPENING.
4. FABRICATOR MAY MODIFY COMPONENTS OF TRASH RACK TO IMPROVE CONTRACTIBILITY OF TRASH RACK. MODIFICATIONS MUST BE APPROVED BY MCDPS PRIOR TO FABRICATION.

LOW FLOW TRASH RACK DETAIL
N.T.S.

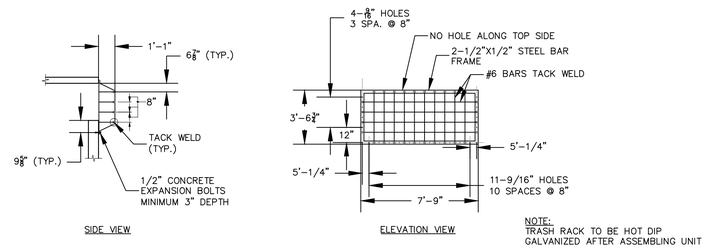

NOTE:
TRASH RACK TO BE HOT DIP GALVANIZED AFTER ASSEMBLING UNIT

HIGH FLOW TRASH RACK DETAIL
1"=5'

MONTGOMERY COUNTY DEPARTMENT OF PERMITTING SERVICES APPROVED FOR:		NOTE: MCDPS APPROVAL DOES NOT NEGATE THE NEED OF A MCDPS ACCESS PERMIT
STORMWATER MANAGEMENT: SWM RETROFIT	SEDIMENT CONTROL TECHNICAL REQUIREMENTS:	ADMINISTRATIVE REQUIREMENTS:
REVIEWED DATE	REVIEWED DATE	REVIEWED DATE
APPROVED DATE	APPROVED DATE	SEDIMENT CONTROL PERMIT NO.
246391 S.M.FILE NO.		MCDPS APPROVAL OF THIS PLAN WILL EXPIRE TWO YEARS FROM THE DATE OF APPROVAL IF THE PROJECT HAS NOT STARTED.

DPS APPROVAL OF A SEDIMENT CONTROL OR STORMWATER MANAGEMENT PLAN IS FOR DEMONSTRATED COMPLIANCE WITH MINIMUM ENVIRONMENTAL RUNOFF TREATMENT STANDARDS AND DOES NOT CREATE OR IMPLY ANY RIGHT TO DIVERT OR CONCENTRATE RUNOFF ONTO ANY ADJACENT PROPERTY WITHOUT THAT PROPERTY WITHOUT THAT PROPERTY OWNER'S PERMISSION. IT DOES NOT RELIEVE THE DESIGN ENGINEER OR OTHER RESPONSIBLE PERSON OF PROFESSIONAL LIABILITY OR ETHICAL RESPONSIBILITY FOR THE ADEQUACY OF THE DRAINAGE DESIGN AS IT AFFECTS UPHILL OR DOWNHILL PROPERTIES.

OWNER CONTACT:

Department of Environmental Protection
Montgomery County Maryland

MR. CRAIG CARSON
MONTGOMERY COUNTY DEPARTMENT OF ENVIRONMENTAL PROTECTION
255 ROCKVILLE PIKE
SUITE 120
ROCKVILLE, MD 20850
(240) 777-7713

CENTURY ENGINEERING
CONSULTING ENGINEERS – PLANNER
10710 GILROY ROAD
HUNT VALLEY, MD 21031

Biohabitats, Inc.
The Stables Building
2081 Clipper Park Road Baltimore MD 21211
tel: 410.554.0156 fax: 410.554.0168
www.biohabitats.com

MISS UTILITY

CALL "MISS UTILITY" AT 1-800-257-7777, 48 HOURS PRIOR TO THE START OF WORK. THE EXCAVATOR MUST NOTIFY ALL PUBLIC UTILITY COMPANIES WITH UNDERGROUND FACILITIES LOCATED BY THE UTILITY COMPANIES PRIOR TO COMMENCING EXCAVATION. THE EXCAVATOR IS RESPONSIBLE FOR COMPLIANCE WITH REQUIRMENTS OF CHAPTER 36A OF THE MONTGOMERY COUNTY CODE.

DATE	ISSUES/REVISIONS

GOSHEN BRANCH SWM RETROFIT

TASK ORDER 16

90% (FINAL) DESIGN

POTOMAC (10TH) ELECTION DISTRICT
MONTGOMERY COUNTY, MARYLAND

COLLINGWOOD
STORMWATER MANAGEMENT PROFILES

PROJECT NO.: 28270.16	SCALE: 1" =20'
DATE: 5/15/2015	BY: RT / CHECK: TT
SEAL:	DWG. NO.:

DPS POND SPECIFICATIONS

These specifications are appropriate to all ponds within the scope of the Standard for practice MD–378. All references to ASTM, MSHA, and AASHTO specifications apply to the most recent version.

A. Construction Inspection by Designated Engineer

The construction of the pond and embankment shall be under the supervision of a Registered Professional Engineer. The engineer must submit written certification that the pond and embankment have been built in accordance with the approved plans to the Department of Permitting Services (DPS) along with a record drawing, soil compaction tests, concrete tests, and other required construction documentation. This should be done immediately following the completion of the project, unless otherwise designated on the plans. The engineer shall have the responsibility and authority to make minor changes in the plans in order to compensate for unusual soil conditions encountered during construction as long as changes do not adversely affect the integrity of the dam. Major changes to the design, which may result from site conditions encountered during construction, must be reviewed and approved by the Design Engineer, DPS, and the Montgomery Soil Conservation District prior to initiation of construction.

B. Site Preparation

Areas designated for borrow areas, embankment, and structural works shall be cleared, grubbed, and stripped of topsoil. All trees, vegetation, roots, and other objectionable material shall be removed. Channel banks and sharp breaks shall be sloped to no steeper than 1:1. All trees shall be cleared and grubbed within 15 feet of the toe of the embankment.

Areas to be covered by the reservoir will be cleared of all trees, brush, logs, fences, rubbish, and other objectionable material unless otherwise designated on the plans. Trees, brush, and stumps shall be cut approximately level with the ground surface. For dry stormwater management ponds, a minimum of a 25–foot radius around the inlet structure shall be cleared.

All cleared and grubbed material shall be disposed of outside and below the limits of the dam and reservoir as directed by the owner or his representative. A sufficient quantity of topsoil will be stockpiled in a suitable location for use on the embankment and other designated areas.

C. Earth Fill

Material – The fill material shall be taken from approved designated borrow areas. It shall be free of roots, stumps, wood, rubbish, stones greater than 4 inches, frozen or other objectionable materials. Fill material for the center of the embankment, and cut off trench shall conform to Unified Soil Classification GC, SC, CH, or CL and must have at least 30% passing the #200 sieve. Consideration may be given to the use of other materials in the embankment if designed by a geotechnical engineer. Such special designs must have construction supervised by a geotechnical engineer. Materials used in the outer shell of the embankment must have the pability to support vegetation of the quality required to prevent erosion of the embankment.
Placement – Areas on which fill is to be placed shall be scarified prior to placement of fill. Fill materials shall be placed in maximum 8 inch thick (before compaction) layers which are to be continuous over the entire length of the fill. The most permeable borrow material shall be placed in the downstream portion of the embankment. The principal spillway must be installed concurrently with fill placement and not excavated into the embankment.

Compaction – The movement of the hauling and spreading equipment over the fill shall be controlled so that the entire surface of each lift shall be traversed by not less than one tread track of the equipment or compaction shall be achieved by a minimum of four complete passes of a sheepsfoot, rubber tired or vibratory roller. Fill material shall contain sufficient moisture such that the required degree of compaction will be obtained with the equipment used. The fill material shall contain sufficient moisture so that if formed into a ball, it will not crumble; yet, not be so wet that water can be squeezed out.

The density of each lift shall not be less than 95% of maximum dry density with a moisture content within ±2% of the optimum. Each layer of fill shall be compacted as necessary to obtain that density, and is to be certified by the Engineer at the time of construction. All compaction is to be determined by AASHTO Method T–99 (Standard Proctor).

Cut Off Trench – The cutoff trench shall be excavated into impervious material along or parallel to the centerline of the embankment as shown on the plans. The bottom width of the trench shall be governed by the equipment used for excavation with the minimum width being four feet. The depth shall be at least four feet below existing grade or as shown on the plans. The side slopes of the trench shall be one to one or flatter. The backfill shall be compacted with construction equipment, rollers, or hand tampers to assure maximum density and minimum permeability.

Embankment Core

The core shall be parallel to the centerline of the embankment as shown on the plans. The top width of the core shall be minimum of four feet. The height shall extend up to at least the 10–year water elevation or as shown on the plans. The side slopes shall be 1 to 1 or flatter. The core shall be compacted with construction equipment, rollers, or hand tampers to assure maximum density and minimum permeability. In addition, the core shall be placed concurrently with the outer shall of the embankment.

D. Structure Backfill

Backfill adjacent to pipes or structures shall be of the type and quality conforming to that specified for the adjoining fill material. The fill shall be placed in horizontal layers not to exceed four inches in thickness and compacted by hand tampers or other manually directed compaction equipment. The material must fill completely all spaces under and adjacent to the pipe. At no time during the backfilling operation shall driven equipment be allowed to operate closer than four feet, measured horizontally, to any part of a structure. Under no circumstances shall equipment be driven over any part of a concrete structure or pipe, unless there is a compacted fill of 24 inches or greater over the structure or pipe.

Structure backfill may be flowable fill meeting the requirements of Maryland Department of Transportation, State Highway Administration Standard Specifications for Construction and Materials, Section 313 as modified. The mixture shall have a 100–200 psi; 28 day unconfined compressive strength. The flowable fill shall have a minimum pH of 4.0 and a minimum resistivity of 2,000 ohm–cm. Material shall be placed such that a minimum of six inches (measured perpendicular to the outside of the pipe) of flowable fill shall be under (bedding), over and, on the sides of the pipe. It only needs to extend up to the spring line for rigid conduits. Average slump of the fill shall be 7 inches to assure flowability of the material. Adequate measures shall be taken (sand bags, etc.) to prevent floating the pipe. When using flowable fill, all metal pipe shall be bituminous coated. Any adjoining soil fill shall be placed in horizontal layers not to exceed four inches in thickness and compacted by hand tampers or other manually directed compaction equipment. The material shall completely fill all voids adjacent to the flowable fill zone. At no time during the back filling operation shall driven equipment be allowed to operate closer than four feet, measured horizontally, to any part of a structure. Under no circumstances shall equipment be driven over any part of a structure or pipe unless there is a compacted fill of 24 inches or greater over the structure or pipe. Backfill material outside the structural backfill (flowable fill) zone shall be of the type and quality conforming to that specified for the core of the embankment or other embankment materials.

E. Pipe Conduits

All pipes shall be circular in cross section.

Corrugated Metal Pipe – All of the following criteria shall apply for corrugated metal pipe:

1. Materials – (Polymer Coated Steel Pipe) – Steel pipes with polymeric coatings shall have a minimum coating thickness of 0.01 inch (10 mil) on both sides of the pipe. This pipe and its appurtenances shall conform to the requirements of AASHTO Specification M–245 & M–246 with watertight coupling bands or flanges.

   Materials – (aluminum Coated Steel Pipe) – This pipe and its appurtenances shall conform to the requirements of AASHTO specification M–274 with watertight coupling bands or flanges. Aluminum Coated Steel Pipe, when used with flowable fill or when soil and/or water conditions warrant the need for increased durability, shall be fully bituminous coated per requirements of AASHTO Specification M–190 Type A. Any aluminum coating damaged or otherwise removed shall be replaced with cold applied bituminous coating compound. Aluminum surfaces that are to be in contact with concrete shall be painted with one coat of zinc chromate primer or two coats of asphalt.

   Materials – (aluminum Pipe) – This pipe and its appurtenances shall confirm to the requirements of AASHTO Specification M–196 or M–211 with watertight coupling bands or flanges. Aluminum Pipe, when used with flowable fill or when soil and/or water conditions warrant for increased durability, shall be fully bituminous coated per requirements of AASHTO Specification M–190 Type A. Aluminum surfaces that are to be in contact with concrete shall be painted with one coat of zinc chromate primer or two coats of asphalt. Hot dip galvanized bolts may be used for connections. The pH of the surrounding soils shall be between 4 and 9.

2. Coupling bands, anti–seep collars, end sections, etc., must be composed of the same material as the pipe. Metals must be insulated from dissimilar materials with use of rubber or plastic insulating materials at least 24 mils in thickness.

   Connections – All connections with pipes must be completely watertight. The drain pipe or barrel connections to the riser shall be welded all around when the pipe and riser are metal. Anti–seep collars shall be connected to the pipe in such a manner as to be completely watertight. Dimple bands are not considered to be watertight.

   All connections shall use a rubber or neoprene gasket when joining pipe sections. The end of each pipe shall be re–rolled an adequate number of corrugations to accommodate the band width. Pipe ends must be matched and numbered by the manufacturer. The following type connections are acceptable for pipes less than 24 inches in diameter; flanges on both ends of the pipe with a circular 3/8 inch closed cell neoprene gasket, pre– punched to the flange bolt circle, sandwiched between adjacent flanges; a 12–inch wide standard lap type band with 12–inch wide by 3/8 inch thick, closed cell circular neoprene gasket; and a 12–inch wide hugger type band with o–ring gaskets having a minimum diameter of ½–inch greater than the corrugation depth. Pipes 24 inches in diameter and larger shall be connected by a 24–inch long annular corrugated band using a minimum of 4 (four) rods and lugs, 2 on each connecting pipe end, per current DPS band detail. A 24–inch wide by 3/8–inch thick closed cell circular neoprene gasket will be installed with 12 inches on the end of each pipe. Flanged joints with 3/8–inch closed cell gaskets the full width of the flange is also acceptable.

   Helically corrugated pipe shall have either continuously welded seams or have lock seams with internal caulking or a neoprene bead.

3. Bedding – The pipe shall be firmly and uniformly bedded throughout its entire length. Where rock or soft, spongy or other unstable soil is encountered, all such material shall be removed and replaced with suitable earth compacted to provide adequate support.

4. Backfilling shall conform to "Structure Backfill."

5. Other details (anti–seep collars, valves, etc.) shall be as shown on the drawings.

Reinforced Concrete Pipe – All of the following criteria shall apply for reinforced concrete pipe:

1. Materials – RCP shall have bell and spigot joints with rubber gaskets and shall meet ASTM Designation C–361. Pipes must be labeled in full accordance with ASTM C–361, including the ASTM C–361 designation on the inside of each section of pipe, and all pipes must be clearly marked by the manufacturer prior to delivery to the job site. Pipes with multiple designations will be rejected.
2. Bedding – Reinforced concrete pipe conduits shall be laid in a concrete bedding/cradle for their entire length. This bedding/cradle shall consist of high slump concrete placed under the pipe and up the sides of the pipe at least 50% of its outside diameter with a minimum thickness of 6–inches. Where a concrete cradle is not needed for structural reasons, flowable fill may be used as described in the "Structure Backfill" section of this standard. Gravel bedding is not permitted.
3. Laying pipe – Bell and spigot pipe shall be placed with the bell end upstream. Joints shall be made in accordance with recommendations of the manufacturer of the material. After the joints are sealed for the entire line, the bedding shall be placed so that all spaces under the pipe are filled. Care shall be exercised to prevent any deviation from the original line and grade of the pipe. The first joint must be located within four feet from the riser.
4. Backfilling shall conform to "Structure Backfill."
5. Other details (anti–seep collars, valves, etc.) shall be as shown on the drawings.

Plastic Pipe – The following criteria shall apply for plastic pipe:

1. Materials – PVC pipe shall be PVC–1120 or PVC–1220 conforming to ASTM D–1785 or ASTM D–2241. Corrugated High Density Polyethylene (HDPE) pipe, couplings and fittings shall conform to the following: 4 – 10 inch pipe shall meet the requirement of AASHTO M252 Type S, and 12 through 24 inch shall meet the requirements of AASHTO M294 Type S.
2. Joints and connections to anti–seep collars shall be completely watertight.
3. Bedding – The pipe shall be firmly and uniformly bedded throughout its entire length.
4. Where rock or soft, spongy or other unstable soil is encountered, all such material shall be removed and replaced with suitable earth compacted to provide adequate support.
5. Backfilling shall conform to "Structure Backfill."
6. Other details (anti–seep collars, valves, etc.) shall be as shown on the drawings.

F. Drainage Diaphragms

When a drainage diaphragm is used, a registered professional engineer will supervise the design and construction inspection.

G. Concrete

Concrete design shall meet the requirements of ACI 350, Environmental Engineering Concrete Structures, with freezing and thawing exposures. Concrete shall be a type II or IIA cement, with a 28 day compressive strength of 4500 psi for cast in place and 5000 psi for pre–cast structures. Concrete shall also meet the requirements of Maryland Department of Transportation, State Highway Administration Standard Specifications for Construction and Materials, Section 420, Mix No. 6.

H. Rock Rip–rap

Rock rip–rap shall meet the requirements of Maryland Department of Transportation, State Highway Administration Standard Specification for Construction and Materials, Section 311. Geotextile shall be placed under all rip–rap and shall meet the requirements of Maryland Department of Transportation, State Highway Administration Standard Specifications for Construction and Materials, Section 921.09, Class C.

I. Care of Water during Construction

All work on permanent structures shall be carried out in areas free from water. The Contractor shall construct and maintain all temporary dikes, levees, cofferdams, drainage channels, and stream diversions necessary to protect the areas to be occupied by the permanent works. The contractor shall also furnish, install, operate, and maintain all necessary pumping and other equipment required for removal of water from the various parts of the work and for maintaining the excavations, foundation, and other parts of the work free from water as required or directed by the engineer for constructing each part of the work. After having served their purpose, all temporary protective works shall be removed or leveled, and graded to the extent required to prevent obstruction in any degree whatsoever of the flow of water to the spillway or outlet works, and so as not to interfere in any way with the operation or maintenance of the structure. Stream diversions shall be maintained until the full flow can be passed through the permanent works. The removal of water from the required excavation and the foundation shall be accomplished in a manner and to the extent that will maintain stability of the excavated slopes and bottom of required excavations and will allow satisfactory performance of all construction operations. During the placing and compacting of material in required excavations the water level at the locations being refilled shall be maintained below the bottom of the excavation at such locations which may require draining the water to sumps from which the water shall be pumped.

J. Stabilization

All borrow areas shall be graded to provide proper drainage and left in a sightly condition. All exposed surfaces of the embankment, spillway, spoil and borrow areas, and berms shall be stabilized by seeding, liming, fertilizing and mulching in accordance with the Maryland Soil Conservation Service Standards and Specifications for Critical Area Planting (MD–342) or as shown on the accompanying drawings.

K. Erosion and Sediment Control

Construction operations will be carried out in such a manner that erosion will be controlled and water and air pollution minimized. State and local laws concerning pollution abatement will be followed. Construction plans shall detail erosion and sediment control measures to be employed during the construction process.

MONTGOMERY COUNTY DEPARTMENT OF PERMITTING SERVICES APPROVED FOR:		NOTE: MCDPS APPROVAL DOES NOT NEGATE THE NEED OF A MCDPS ACCESS PERMIT
STORMWATER MANAGEMENT: SWM RETROFIT	SEDIMENT CONTROL TECHNICAL REQUIREMENTS:	ADMINISTRATIVE REQUIREMENTS:
REVIEWED DATE	REVIEWED DATE	REVIEWED DATE
APPROVED DATE	APPROVED DATE	SEDIMENT CONTROL PERMIT NO.
246391 S.M.FILE NO.		MCDPS APPROVAL OF THIS PLAN WILL EXPIRE TWO YEARS FROM THE DATE OF APPROVAL IF THE PROJECT HAS NOT STARTED.

DPS APPROVAL OF A SEDIMENT CONTROL OR STORMWATER MANAGEMENT PLAN IS FOR DEMONSTRATED COMPLIANCE WITH MINIMUM ENVIRONMENTAL RUNOFF TREATMENT STANDARDS AND DOES NOT CREATE OR IMPLY ANY RIGHT TO DIVERT OR CONCENTRATE RUNOFF ONTO ANY ADJACENT PROPERTY WITHOUT THAT PROPERTY WITHOUT THAT PROPERTY OWNER'S PERMISSION. IT DOES NOT RELIEVE THE DESIGN ENGINEER OR OTHER RESPONSIBLE PERSON OF PROFESSIONAL LIABILITY OR ETHICAL RESPONSIBILITY FOR THE ADEQUACY OF THE DRAINAGE DESIGN AS IT AFFECTS UPHILL OR DOWNHILL PROPERTIES.

OWNER CONTACT:

Department of Environmental Protection
Montgomery County Maryland

MR. CRAIG CARSON
MONTGOMERY COUNTY DEPARTMENT OF ENVIRONMENTAL PROTECTION
255 ROCKVILLE PIKE
SUITE 120
ROCKVILLE, MD 20850
(240) 777-7713

CENTURY ENGINEERING
CONSULTING ENGINEERS – PLANNER
10710 GILROY ROAD
HUNT VALLEY, MD 21031

Biohabitats, Inc.
The Stables Building
2081 Clipper Park Road Baltimore MD 21211
tel: 410.554.0156 fax: 410.554.0168
www.biohabitats.com

MISS UTILITY

CALL "MISS UTILITY" AT 1-800-257-7777, 48 HOURS PRIOR TO THE START OF WORK. THE EXCAVATOR MUST NOTIFY ALL PUBLIC UTILITY COMPANIES WITH UNDERGROUND FACILITIES LOCATED BY THE UTILITY COMPANIES PRIOR TO COMMENCING EXCAVATION. THE EXCAVATOR IS RESPONSIBLE FOR COMPLIANCE WITH REQUIRMENTS OF CHAPTER 36A OF THE MONTGOMERY COUNTY CODE.

DATE	ISSUES/REVISIONS

GOSHEN BRANCH SWM RETROFIT
TASK ORDER 16
90% (FINAL) DESIGN

POTOMAC (10TH) ELECTION DISTRICT
MONTGOMERY COUNTY, MARYLAND

COLLINGWOOD
STORMWATER MANAGEMENT DETAILS

PROJECT NO.: 28270.16	SCALE: 1" =20'
DATE: 5/15/2015	BY: RT / CHECK: TT
SEAL:	DWG. NO.:

MONTGOMERY COUNTY DEPARTMENT OF PERMITTING SERVICES STANDARD EROSION AND SEDIMENT CONTROL NOTES

1. THE PERMITTEE SHALL NOTIFY THE DEPARTMENT OF PERMITTING SERVICES (DPS) FORTY-EIGHT (48) HOURS BEFORE COMMENCING ANY LAND DISTURBING ACTIVITY AND, UNLESS WAIVED BY THE DEPARTMENT, SHALL BE REQUIRED TO HOLD A PRE-CONSTRUCTION MEETING BETWEEN THEM OR THEIR REPRESENTATIVE, THEIR ENGINEER AND AN AUTHORIZED REPRESENTATIVE OF THE DEPARTMENT.
2. THE PERMITTEE MUST OBTAIN INSPECTION AND APPROVAL BY DPS AT THE FOLLOWING POINTS:
   - A. AT THE REQUIRED PRE-CONSTRUCTION MEETING.
   - B. FOLLOWING INSTALLATION OF SEDIMENT CONTROL MEASURES AND PRIOR TO ANY OTHER LAND DISTURBING ACTIVITY.
   - C. DURING THE INSTALLATION OF A SEDIMENT BASIN OR STORMWATER MANAGEMENT STRUCTURE AT THE REQUIRED INSPECTION POINTS (SEE INSPECTION CHECKLIST ON PLAN). NOTIFICATION PRIOR TO COMMENCING CONSTRUCTION IS MANDATORY.
   - D. PRIOR TO REMOVAL OR MODIFICATION OF ANY SEDIMENT CONTROL STRUCTURE(S).
   - E. PRIOR TO FINAL ACCEPTANCE.
3. THE PERMITTEE SHALL CONSTRUCT ALL EROSION AND SEDIMENT CONTROL MEASURES PER THE APPROVED PLAN AND CONSTRUCTION SEQUENCE, SHALL HAVE THEM INSPECTED AND APPROVED BY THE DEPARTMENT PRIOR TO BEGINNING ANY OTHER LAND DISTURBANCES, SHALL ENSURE THAT ALL RUNOFF FROM DISTURBED AREAS IS DIRECTED TO THE SEDIMENT CONTROL DEVICES, AND SHALL NOT REMOVE ANY EROSION OR SEDIMENT CONTROL MEASURE. WITHOUT PRIOR PERMISSION FROM THE DEPARTMENT.
4. THE PERMITTEE SHALL PROTECT ALL POINTS OF CONSTRUCTION INGRESS AND EGRESS TO PREVENT THE DEPOSITION OF MATERIALS ONTO TRAVERSED PUBLIC THOROUGHFARE(S). ALL MATERIALS DEPOSITED ONTO PUBLIC THOROUGHFARE(S) SHALL BE REMOVED IMMEDIATELY.
5. THE PERMITTEE SHALL INSPECT PERIODICALLY AND MAINTAIN CONTINUOUSLY IN EFFECTIVE OPERATING CONDITION, ALL EROSION AND SEDIMENT CONTROL MEASURES UNTIL SUCH TIMES AS THEY ARE REMOVED WITH PRIOR PERMISSION FROM THE DEPARTMENT. THE PERMITTEE IS RESPONSIBLE FOR IMMEDIATELY REPAIRING OR REPLACING ANY SEDIMENT CONTROL MEASURES WHICH HAVE BEEN DAMAGED OR REMOVED BY THE PERMITTEE OR ANY OTHER PERSON.
6. FOLLOWING INITIAL SOIL DISTURBANCE OR RE-DISTURBANCE, PERMANENT OR TEMPORARY STABILIZATION MUST BE COMPLETED WITHIN:
   - A. THREE (3) CALENDAR DAYS AS TO THE SURFACE OF ALL PERIMETER DIKES, SWALES, DITCHES, PERMIMETER SLOPES AND ALL SLOPES STEEPER THAN 3 HORIZONTAL TO 1 VERTICAL (3:1); AND
   - B. SEVEN (7) CALENDAR DAYS AS TO ALL OTHER DISTURBED OR GRADED AREAS ON THE PROJECT SITE NOT UNDER ACTIVE GRADING.

   ALL AREAS DISTURBED OUTSIDE THE PERIMETER SEDIMENT CONTROL SYSTEM MUST BE MINIMIZED AND STABILIZED IMMEDIATELY. MAINTENANCE MUST BE PERFORMED AS NECESARY TO ENSURE CONTINUED STABILIZATION.
7. THE PERMITTEE SHALL APPLY SOD, SEED, AND ANCHORED STRAW MULCH, OR OTHER APPROVED STABILIZATION MEASURES TO ALL DISTURBED AREAS WITHIN SEVEN (7) CALENDAR DAYS AFTER STRIPPING AND GRADING ACTIVITIES HAVE CEASED ON THAT AREA. MAINTENANCE SHALL BE PERFORMED AS NECESSARY TO ENSURE CONTINUED STABILIZATION. ACTIVE CONSTRUCTION AREAS, SUCH AS BORROW OR STOCKPILE AREAS, ROADWAY IMPROVEMENTS, AND AREAS WITHIN FIFTY (50) FEET OF A BUILDING UNDER CONSTRUCTION MAY BE EXEMPT FROM THIS REQUIREMENT, PROVIDED THAT EROSION AND SEDIMENT CONTROL MEASURES ARE INSTALLED AND MAINTAINED TO PROTECT THOSE AREAS.
8. PRIOR TO REMOVAL OF SEDIMENT CONTROL MEASURES, THE PERMITTEE SHALL STABILIZE ALL CONTRIBUTORY DISTURBED AREAS WITH REQUIRED SOIL AMENDMENTS AND TOPSOIL, USING SOD OR AN APPROVED PERMANENT SEED MIXTURE AND AN APPROVED ANCHORED MULCH. WOOD FIBER MULCH MAY ONLY BE USED IN SEEDING SEASON WHEN THE SLOPE DOES NOT EXCEED 10% AND GRADING HAS BEEN DONE TO PROMOTE SHEET FLOW DRAINAGE. AREAS BROUGHT TO FINISHED GRADE DURING THE SEEDING SEASON SHALL BE PERMANENTLY STABILIZED WITHIN SEVEN (7) CALENDAR DAYS OF ESTABLISHMENT. WHEN PROPERTY IS BROUGHT TO FINISHED GRADE DURING THE MONTHS OF NOVEMBER THROUGH FEBRUARY, AND PERMANENT STABILIZATION IS FOUND TO BE IMPRACTICAL, AN APPROVED TEMPORARY SEED AND STRAW ANCHORED MULCH SHALL BE APPLIED TO DISTURBED AREAS. THE FINAL PERMANENT STABILIZATION OF SUCH PROPERTY SHALL BE COMPLETED PRIOR TO THE FOLLOWING APRIL 15.
9. THE SITE PERMIT, WORK, MATERIALS, APPROVED SC/SM PLANS, AND TEST REPORTS SHALL BE AVAILABLE AT THE SITE FOR INSPECTION BY DULY AUTHORIZED OFFICIALS OF MONTGOMERY COUNTY.
10. SURFACE DRAINAGE FLOWS OVER UNSTABILIZED CUT AND FILL SLOPES SHALL BE CONTROLLED BY EITHER PREVENTING DRAINAGE FLOWS FROM TRAVERSING THE SLOPES OR BY INSTALLING MECHANICAL DEVICES TO LOWER THE WATER DOWN SLOPE WITHOUT CAUSING EROSION. DIKES SHALL BE INSTALLED AND MAINTAINED AT THE TOP OF CUT OR FILL SLOPES UNTIL THE SLOPE AND DRAINAGE AREA TO IT ARE FULLY STABILIZED, AT WHICH TIME THEY MUST BE REMOVED AND FINAL GRADING DONE TO PROMOTE SHEET FLOW DRAINAGE. MECHANICAL DEVICES MUST BE PROVIDED AT POINTS OF CONCENTRATED FLOW WHERE EROSION IS LIKELY TO OCCUR.
11. PERMANENT SWALES OR OTHER POINTS OF CONCENTRATED WATER FLOW SHALL BE STABILIZED WITHIN 7 CALENDAR DAYS OF ESTABLISHMENT WITH SOD OR SEED WITH AN APPROVED EROSION CONTROL MATTING OR BY OTHER APPROVED STABILIZATION MEASURES.
12. SEDIMENT CONTROL DEVICES SHALL BE REMOVED, WITH PERMISSION OF THE DEPARTMENT, WITHIN THIRTY (30) CALENDAR DAYS FOLLOWING ESTABLISHMENT OF PERMANENT STABILIZATION IN ALL CONTRIBUTORY DRAINAGE AREAS. STORMWATER MANAGEMENT STRUCTURES USED TEMPORARILY FOR SEDIMENT CONTROL SHALL BE CONVERTED TO THE PERMANENT CONFIGURATION WITHIN THIS TIME PERIOD AS WELL.
13. NO PERMANENT CUT OR FILL SLOPE WITH A GRADIENT STEEPER THAN 3:1 WILL BE PERMITTED IN LAWN MAINTENANCE AREAS OR ON RESIDENTIAL LOTS. A SLOPE GRADIENT OF UP TO 2:1 WILL BE PERMITTED IN NON-MAINTENANCE AREAS PROVIDED THAT THOSE AREAS ARE INDICATED ON THE EROSION AND SEDIMENT CONTROL PLAN WITH A LOW-MAINTENANCE GROUND COVER SPECIFIED FOR PERMANENT STABILIZATION. SLOPE GRADIENT STEEPER THAN 2:1 WILL NOT BE PERMITTED WITH VEGETATIVE STABILIZATION.
14. THE PERMITTEE SHALL INSTALL A SPLASH BLOCK AT THE BOTTOM OF EACH DOWNSPOUT UNLESS THE DOWNSPOUT IS CONNECTED BY A DRAIN LINE TO AN ACCEPTABLE OUTLET.
15. FOR FINISHED GRADING, THE PERMITTEE SHALL PROVIDE ADEQUATE GRADIENTS SO AS TO PREVENT WATER FROM STANDING ON THE SURFACE OF LAWNS MORE THAN TWENTY-FOUR (24) HOURS AFTER THE END OF A RAINFALL, EXCEPT IN DESIGNATED DRAINAGE COURSES AND SWALE FLOW AREAS, WHICH MAY DRAIN AS LONG AS FORTY-EIGHT (48) HOURS AFTER THE END OF A RAINFALL.
16. SEDIMENT TRAPS OR BASINS ARE NOT PERMITTED WITHIN 20 FEET OF A BUILDING WHICH IS EXISTING OR UNDER CONSTRUCTION. NO BUILDING MAY BE CONSTRUCTED WITHIN 20 FEET OF A SEDIMENT TRAP OR BASIN.
17. ALL INLETS IN NON-SUMP AREAS SHALL HAVE ASPHALT BERMS INSTALLED AT THE TIME OF BASE PAVING ESTABLISHMENT.
18. THE SEDIMENT CONTROL INSPECTOR HAS THE OPTION OF REQUIRING ADDITIONAL SEDIMENT CONTROL MEASURES, AS DEEMED NECESSARY.
19. ALL TRAP ELEVATIONS ARE RELATIVE TO THE OUTLET ELEVATION, WHICH MUST BE ON EXISTING UNDISTURBED GROUND.
20. VEGETATIVE STABILIZATION SHALL BE PERFORMED IN ACCORDANCE WITH THE STANDARDS AND SPECIFICATIONS FOR SOIL EROSION AND SEDIMENT CONTROL.
21. SEDIMENT TRAP(S)/ BASIN(S) SHALL BE CLEANED OUT AND RESTORED TO THE ORIGINAL DIMENSIONS WHEN SEDIMENT HAS ACCUMULATED TO THE POINT OF ONE-HALF (1/2) THE WET STORAGE DEPT OF TH ETRAP/BASIN (1/4 THE WET STORAGE DEPTH FOR ST-III) OR WHEN REQUIRED BY THE SEDIMENT CONTROL INSPECTOR.
22. SEDIMENT REMOVED FROM TRAPS SHALL BE PLACED AND STABILIZED IN APPROVED AREAS, BUT NOT WITHIN A FLOODPLAIN.
23. ALL SEDIMENT BASINS AND TRAPS MUST BE SURROUNDED WITH A WELDED WIRE SAFETY FENCE. THE FENCE MUST BE AT LEAST 42 INCHES HIGH, HAVE POSTS SPACED NO FARTHER APART THAN 8 FEET, HAVE MESH OPENINGS NO GREATER THE TWO INCHES IN WIDTH AND FOUR INCHES IN HEIGHT, WITH A MINIMUM OF 14 GAUGE WIRE. SAFETY FENCE MUST BE MAINTAINED IN GOOD CONDITION AT ALL TIMES.
24. NO EXCAVATION IN THE AREAS OF EXISTING UTILITIES IS PERMITTED UNLESS THEIR LOCATION HAS BEEN DETERMINED. CALL "MISS UTILITY" AT 1-800-257-7777, 48 HOURS PRIOR TO THE START OF WORK.
25. OFF-SITE SPOIL OR BORROW AREAS MUST HAVE PRIOR APPROVAL BY DPS.
26. SEDIMENT TRAP/BASIN DEWATERING FOR CLEANOUT OR REPAIR MAY ONLY BE DONE WITH THE DPS INSPECTOR'S PERMISSION. THE INSPECTOR MUST APPROVE THE DEWATERING METHOD FOR EACH APPLICATION. THE FOLLOWING METHODS MAY BE CONSIDERED:
    - A. PUMP DISCHARGE MAY BE DIRECTED TO ANOTHER ON-SITE SEDIMENT TRAP OR BASIN, PROVIDED IT IS OF SUFFICIENT VOLUME AND THE PUMP INTAKE IS FLOATED TO PREVENT AGITATION OR SUCTION OF DEPOSITED SEDIMENTS; OR
    - B. THE PUMP INTAKE MAY UTILIZE A REMOVABLE PUMPING STATION AND MUST DISCHARGE INTO AN UNDISTURBED AREA THROUGH A NON-EROSIVE OUTLET; OR
    - C. THE PUMP INTAKE MAY BE FLOATED AND DISCHARGE INTO A DIRT BAG (12 OZ. NON-WOVEN FABRIC), OR APPROVED EQUIVALENT, LOCATED IN AN UNDISTURBED BUFFER AREA.

    REMEMBER: DEWATERING OPERATION AND METHOD MUST HAVE PRIOR APPROVAL BY THE DPS INSPECTOR.
27. THE PERMITTEE MUST NOTIFY THE DEPARTMENT OF ALL UTILITY CONSTRUCTION ACTIVITIES WITHIN THE PERMITTED LIMITS **OF DISTURBANCE PRIOR TO THE COMMENCEMENT OF THOSE ACTIVITIES.**
28. TOPSOIL MUST BE APPLIED TO ALL PERVIOUS AREAS WITHIN THE LIMITS OF DISTURBANCE PRIOR TO PERMANENT STABILIZATION IN ACCORDANCE WITH MDE "STANDARDS AND SPECIFICATIONS FOR SOIL PREPARATION, TOPSOILING, AND SOIL AMENDMENTS".

SEQUENCE OF CONSTRUCTION

SEQUENCE:

1. **PRIOR TO CLEARING TREES, INSTALLING SEDIMENT CONTROL MEASURES, OR GRADING, A PRE-CONSTRUCTION MEETING MUST BE CONDUCTED ON-SITE WITH PLANNING DEPARTMENT, PLANS ENFORCEMENT INSPECTOR (301) 495-4521 (48 HOURS NOTICE), M-NCPPC, OWNERS REPRESENTATIVE, AND THE SITE ENGINEER.**
2. **THE LIMITS OF DISTURBANCE MUST BE FIELD MARKED PRIOR TO CLEARING OF TREES, INSTALLATION OF SEDIMENT CONTROL MEASURES, CONSTRUCTION, OR OTHER LAND DISTURBING ACTIVITIES.**
3. **REMOVE TREES AS SPECIFIED ON THE PLAN AND INSTALL STABILIZED CONSTRUCTION ENTRANCE. SILT FENCE IS TO BE ADDED AS NEEDED PER THE DPS INSPECTOR AS SITE WORK PROGRESSES.**
4. **EXCAVATE AREA UPSTREAM UP BURIED HEADWALL AS INDICATED ON PLAN TO EXPOSE EXISTING TRASH RACK, EXISTING CONCRETE PAD WHICH SUPPORTS TRASH RACK, AND INLET TO 4" D.I.P. REMOVE EXISTING LOW FLOW TRASH RACK. INSPECT HEADWALL, 4" D.I.P. AND CONCRETE PAD. ANY ITEMS IN POOR CONDITION MUST BE REPLACED. PROVIDE SAME DAY STABILIZATION FOR ENTIRE EXCAVATED AREA. INSTALL CONCRETE WASHOUT AREA IF NEW CONCRETE IS NECESSARY.**
5. **WITH APPROVAL OF CONSTRUCTION INSPECTOR, INSTALL NEW TRASH RACK.**
6. **REMOVE AND REPLACE HIGH FLOW TRASH RACK PER PLAN.**
7. **ADJUST EXISTING GATE VALVE LOCATED INSIDE OF EXISTING RISER PER PLAN.**
8. **INSTALL LANDSCAPING PER LANDSCAPE PLAN. PROVIDE SAME DAY STABILIZATION FOR ENTIRE DISTURBED AREA USING WITH TYPE A SOIL STABILIZATION MATTING.**
9. **CLEAN LOW FLOW PIPE. AND REMOVE ANY SEDIMENT FROM RISER OR DOWNSTREAM STORMDRAIN.**
9. **AFTER OBTAINING WRITTEN APPROVAL FROM MCDPS INSPECTOR REMOVE STABILIZED CONSTRUCTION ENTRANCE. STABILIZE THE CONSTRUCTION ENTRANCE AND ANY OTHER REMAINING DISTURBED AREAS WITH TOPSOIL, SEED PER LANDSCAPE PLAN, AND TYPE A STABILIZATION MATTING.**
10. **REPAIR/REPLACE EXISTING SIDEWALK IN-KIND. PROVIDE CONCRETE WASHOUT IF NEW CONCRETE IS NECESSARY. PROVIDE SAME DAY STABILIZATION.**
11. **REMOVE CONCRETE WASHOUT FACILITY WHEN ALL CONCRETE CONSTRUCTION IS COMPLETE, STABILIZE AREA WITH TOPSOIL, SEED, AND MULCH.**

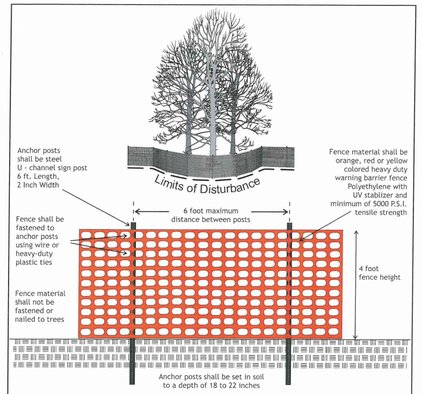

Unless trees are already protected by means of sediment and erosion control devices such as super silt fence, tree protection fencing shall be installed along the approved limits of disturbance before any clearing, grading or construction activities begin; and, shall be maintained throughout all active phases of construction. If for any reason DPS determines that polyethylene barrier fence is not providing effective protection, other forms of tree protection such as 14-gauge welded wire or chain link fencing may be required as a replacement

	MONTGOMERY COUNTY DEPARTMENT OF PERMITTING SERVICES	TREE PROTECTION FENCING DETAIL	DATE: 6 /14
			SCALE: NONE

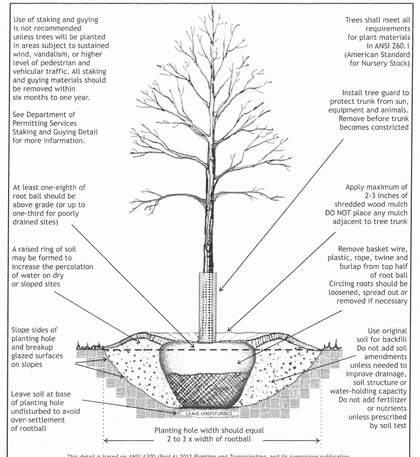

This detail is based on *ANSI A300 (Part 6) 2012 Planting and Transplanting*, and its companion publication, *Best Management Practices: Tree Planting*, copyright 2005 by the *International Society of Arboriculture*

	MONTGOMERY COUNTY DEPARTMENT OF PERMITTING SERVICES	TREE PLANTING DETAIL FOR BALLED AND BURLAP NURSERY STOCK	DATE: 6 /14
			SCALE: NONE

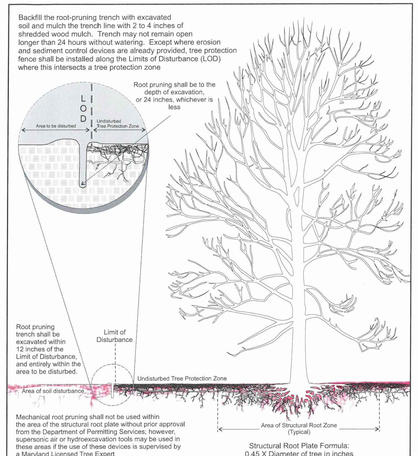

	MONTGOMERY COUNTY DEPARTMENT OF PERMITTING SERVICES	ROOT PRUNING AND STRUCTURAL ROOT PLATE FORMULA DETAIL	DATE: 6 /14
			SCALE: NONE

MONTGOMERY COUNTY DEPARTMENT OF PERMITTING SERVICES APPROVED FOR:		NOTE: MCDPS APPROVAL DOES NOT NEGATE THE NEED OF A MCDPS ACCESS PERMIT
STORMWATER MANAGEMENT: SWM RETROFIT	SEDIMENT CONTROL TECHNICAL REQUIREMENTS:	ADMINISTRATIVE REQUIREMENTS:
REVIEWED DATE	REVIEWED DATE	REVIEWED DATE
APPROVED DATE	APPROVED DATE	SEDIMENT CONTROL PERMIT NO.
246391 S.M.FILE NO.		MCDPS APPROVAL OF THIS PLAN WILL EXPIRE TWO YEARS FROM THE DATE OF APPROVAL IF THE PROJECT HAS NOT STARTED.

DPS APPROVAL OF A SEDIMENT CONTROL OR STORMWATER MANAGEMENT PLAN IS FOR DEMONSTRATED COMPLIANCE WITH MINIMUM ENVIRONMENTAL RUNOFF TREATMENT STANDARDS AND DOES NOT CREATE OR IMPLY ANY RIGHT TO DIVERT OR CONCENTRATE RUNOFF ONTO ANY ADJACENT PROPERTY WITHOUT THAT PROPERTY WITHOUT THAT PROPERTY OWNER'S PERMISSION. IT DOES NOT RELIEVE THE DESIGN ENGINEER OR OTHER RESPONSIBLE PERSON OF PROFESSIONAL LIABILITY OR ETHICAL RESPONSIBILITY FOR THE ADEQUACY OF THE DRAINAGE DESIGN AS IT AFFECTS UPHILL OR DOWNHILL PROPERTIES.

OWNER CONTACT:

Department of Environmental Protection
Montgomery County Maryland

MR. CRAIG CARSON
MONTGOMERY COUNTY DEPARTMENT OF ENVIRONMENTAL PROTECTION
255 ROCKVILLE PIKE
SUITE 120
ROCKVILLE, MD 20850
(240) 777-7713

CENTURY ENGINEERING
CONSULTING ENGINEERS – PLANNER
10710 GILROY ROAD
HUNT VALLEY, MD 21031

Biohabitats, Inc.
The Stables Building
2081 Clipper Park Road Baltimore MD 21211
tel: 410.554.0156 fax: 410.554.0168
www.biohabitats.com

MISS UTILITY

CALL "MISS UTILITY" AT 1-800-257-7777, 48 HOURS PRIOR TO THE START OF WORK. THE EXCAVATOR MUST NOTIFY ALL PUBLIC UTILITY COMPANIES WITH UNDERGROUND FACILITIES LOCATED BY THE UTILITY COMPANIES PRIOR TO COMMENCING EXCAVATION. THE EXCAVATOR IS RESPONSIBLE FOR COMPLIANCE WITH REQUIRMENTS OF CHAPTER 36A OF THE MONTGOMERY COUNTY CODE.

DATE	ISSUES/REVISIONS

GOSHEN BRANCH SWM RETROFIT

TASK ORDER 16
90% (FINAL) DESIGN

POTOMAC (10TH) ELECTION DISTRICT
MONTGOMERY COUNTY, MARYLAND

COLLINGWOOD ESC NOTES

PROJECT NO.: 28270.16	SCALE: SEE PLAN
DATE: 5/15/2015	BY: RT / CHECK: TT
SEAL:	DWG. NO.:

DETAIL E-1 SILT FENCE

STANDARD SYMBOL —SF—

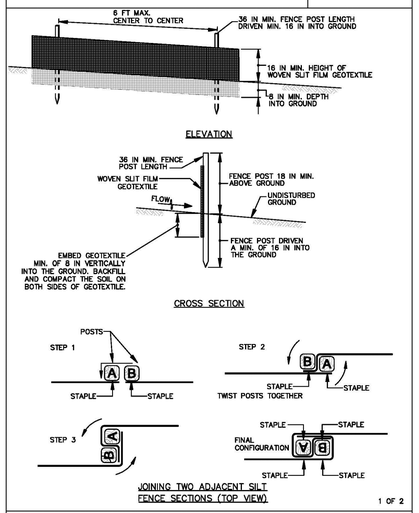

1 OF 2

MARYLAND STANDARDS AND SPECIFICATIONS FOR SOIL EROSION AND SEDIMENT CONTROL

U.S. DEPARTMENT OF AGRICULTURE NATURAL RESOURCES CONSERVATION SERVICE	2011	MARYLAND DEPARTMENT OF ENVIRONMENT WATER MANAGEMENT ADMINISTRATION

DETAIL E-1 SILT FENCE

STANDARD SYMBOL —SF—

CONSTRUCTION SPECIFICATIONS

1. USE WOOD POSTS 1¾ X 1¾ ± 1/16 INCH (MINIMUM) SQUARE CUT OF SOUND QUALITY HARDWOOD. AS AN ALTERNATIVE TO WOODEN POST USE STANDARD "T" OR "U" SECTION STEEL POSTS WEIGHING NOT LESS THAN 1 POUND PER LINEAR FOOT.
2. USE 36 INCH MINIMUM POSTS DRIVEN 16 INCH MINIMUM INTO GROUND NO MORE THAN 6 FEET APART.
3. USE WOVEN SLIT FILM GEOTEXTILE AS SPECIFIED IN SECTION H-1 MATERIALS AND FASTEN GEOTEXTILE SECURELY TO UPSLOPE SIDE OF FENCE POSTS WITH WIRE TIES OR STAPLES AT TOP AND MID-SECTION.
4. PROVIDE MANUFACTURER CERTIFICATION TO THE AUTHORIZED REPRESENTATIVE OF THE INSPECTION/ENFORCEMENT AUTHORITY SHOWING THAT THE GEOTEXTILE USED MEETS THE REQUIREMENTS IN SECTION H-1 MATERIALS.
5. EMBED GEOTEXTILE A MINIMUM OF 8 INCHES VERTICALLY INTO THE GROUND. BACKFILL AND COMPACT THE SOIL ON BOTH SIDES OF FABRIC.
6. WHERE TWO SECTIONS OF GEOTEXTILE ADJOIN: OVERLAP, TWIST, AND STAPLE TO POST IN ACCORDANCE WITH THIS DETAIL.
7. EXTEND BOTH ENDS OF THE SILT FENCE A MINIMUM OF FIVE HORIZONTAL FEET UPSLOPE AT 45 DEGREES TO THE MAIN FENCE ALIGNMENT TO PREVENT RUNOFF FROM GOING AROUND THE ENDS OF THE SILT FENCE.
8. REMOVE ACCUMULATED SEDIMENT AND DEBRIS WHEN BULGES DEVELOP IN SILT FENCE OR WHEN SEDIMENT REACHES 25% OF FENCE HEIGHT. REPLACE GEOTEXTILE IF TORN. IF UNDERMINING OCCURS, REINSTALL FENCE.

2 OF 2

MARYLAND STANDARDS AND SPECIFICATIONS FOR SOIL EROSION AND SEDIMENT CONTROL

U.S. DEPARTMENT OF AGRICULTURE NATURAL RESOURCES CONSERVATION SERVICE	2011	MARYLAND DEPARTMENT OF ENVIRONMENT WATER MANAGEMENT ADMINISTRATION

DETAIL H-6 ONSITE CONCRETE WASHOUT STRUCTURE

STANDARD SYMBOL CWS

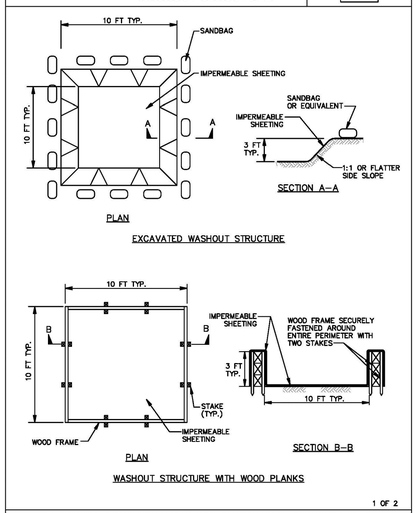

1 OF 2

MARYLAND STANDARDS AND SPECIFICATIONS FOR SOIL EROSION AND SEDIMENT CONTROL

U.S. DEPARTMENT OF AGRICULTURE NATURAL RESOURCES CONSERVATION SERVICE	2011	MARYLAND DEPARTMENT OF ENVIRONMENT WATER MANAGEMENT ADMINISTRATION

DETAIL H-6 ONSITE CONCRETE WASHOUT STRUCTURE

STANDARD SYMBOL CWS

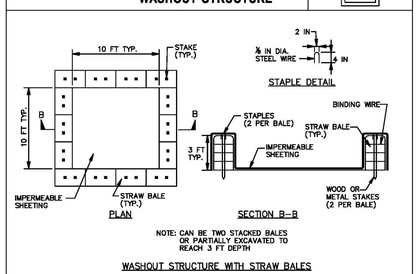

CONSTRUCTION SPECIFICATIONS

1. LOCATE WASHOUT STRUCTURE A MINIMUM OF 50 FEET AWAY FROM OPEN CHANNELS, STORM DRAIN INLETS, SENSITIVE AREAS, WETLANDS, BUFFERS AND WATER COURSES AND AWAY FROM CONSTRUCTION TRAFFIC.
2. SIZE WASHOUT STRUCTURE FOR VOLUME NECESSARY TO CONTAIN WASH WATER AND SOLIDS AND MAINTAIN AT LEAST 4 INCHES OF FREEBOARD. TYPICAL DIMENSIONS ARE 10 FEET X 10 FEET X 3 FEET DEEP.
3. PREPARE SOIL BASE FREE OF ROCKS OR OTHER DEBRIS THAT MAY CAUSE TEARS OR HOLES IN THE LINER. FOR LINER, USE 10 MIL OR THICKER UV RESISTANT, IMPERMEABLE SHEETING, FREE OF HOLES AND TEARS OR OTHER DEFECTS THAT COMPROMISE IMPERMEABILITY OF THE MATERIAL.
4. PROVIDE A SIGN FOR THE WASHOUT IN CLOSE PROXIMITY TO THE FACILITY.
5. KEEP CONCRETE WASHOUT STRUCTURE WATER TIGHT. REPLACE IMPERMEABLE LINER IF DAMAGED (E.G. RIPPED OR PUNCTURED). EMPTY OR REPLACE WASHOUT STRUCTURE THAT IS 75 PERCENT FULL, AND DISPOSE OF ACCUMULATED MATERIAL PROPERLY. DO NOT REUSE PLASTIC LINER. WET-VACUUM STORED LIQUIDS THAT HAVE NOT EVAPORATED AND DISPOSE OF IN AN APPROVED MANNER. PRIOR TO FORECASTED RAINSTORMS, REMOVE LIQUIDS OR COVER STRUCTURE TO PREVENT OVERFLOWS. REMOVE HARDENED SOLIDS, WHOLE OR BROKEN UP, FOR DISPOSAL OR RECYCLING. MAINTAIN RUNOFF DIVERSION AROUND EXCAVATED WASHOUT STRUCTURE UNTIL STRUCTURE IS REMOVED.

2 OF 2

MARYLAND STANDARDS AND SPECIFICATIONS FOR SOIL EROSION AND SEDIMENT CONTROL

U.S. DEPARTMENT OF AGRICULTURE NATURAL RESOURCES CONSERVATION SERVICE	2011	MARYLAND DEPARTMENT OF ENVIRONMENT WATER MANAGEMENT ADMINISTRATION

DETAIL B-1 STABILIZED CONSTRUCTION ENTRANCE

STANDARD SYMBOL SCE

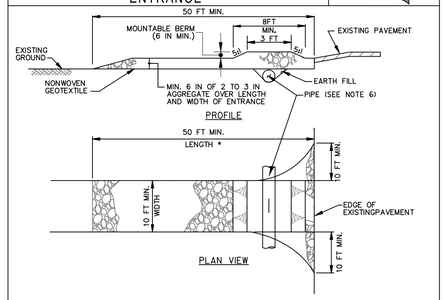

CONSTRUCTION SPECIFICATIONS

1. PLACE STABILIZED CONSTRUCTION ENTRANCE IN ACCORDANCE WITH THE APPROVED PLAN. VEHICLES MUST TRAVEL OVER THE ENTIRE LENGTH OF THE SCE. USE MINIMUM LENGTH OF 50 FEET (*30 FEET FOR SINGLE RESIDENCE LOT). USE MINIMUM WIDTH OF 10 FEET. FLARE SCE 10 FEET MINIMUM AT THE EXISTING ROAD TO PROVIDE A TURNING RADIUS.
2. PIPE ALL SURFACE WATER FLOWING TO OR DIVERTED TOWARD THE SCE UNDER THE ENTRANCE, MAINTAINING POSITIVE DRAINAGE. PROTECT PIPE INSTALLED THROUGH THE SCE WITH A MOUNTABLE BERM WITH 5:1 SLOPES AND A MINIMUM OF 12 INCHES OF STONE OVER THE PIPE. PROVIDE PIPE AS SPECIFIED ON APPROVED PLAN. WHEN THE SCE IS LOCATED AT A HIGH SPOT AND HAS NO DRAINAGE TO CONVEY, A PIPE IS NOT NECESSARY. A MOUNTABLE BERM IS REQUIRED WHEN SCE IS NOT LOCATED AT A HIGH SPOT.
3. PREPARE SUBGRADE AND PLACE NONWOVEN GEOTEXTILE, AS SPECIFIED IN SECTION H-1 MATERIALS.
4. PLACE CRUSHED AGGREGATE (2 TO 3 INCHES IN SIZE) OR EQUIVALENT RECYCLED CONCRETE (WITHOUT REBAR) AT LEAST 6 INCHES DEEP OVER THE LENGTH AND WIDTH OF THE SCE.
5. MAINTAIN ENTRANCE IN A CONDITION THAT MINIMIZES TRACKING OF SEDIMENT. ADD STONE OR MAKE OTHER REPAIRS AS CONDITIONS DEMAND TO MAINTAIN CLEAN SURFACE, MOUNTABLE BERM, AND SPECIFIED DIMENSIONS. IMMEDIATELY REMOVE STONE AND/OR SEDIMENT SPILLED, DROPPED, OR TRACKED ONTO ADJACENT ROADWAY BY VACUUMING, SCRAPING, AND/OR SWEEPING. WASHING ROADWAY TO REMOVE MUD TRACKED ONTO PAVEMENT IS NOT ACCEPTABLE UNLESS WASH WATER IS DIRECTED TO AN APPROVED SEDIMENT CONTROL PRACTICE.

MARYLAND STANDARDS AND SPECIFICATIONS FOR SOIL EROSION AND SEDIMENT CONTROL

U.S. DEPARTMENT OF AGRICULTURE NATURAL RESOURCES CONSERVATION SERVICE	2011	MARYLAND DEPARTMENT OF ENVIRONMENT WATER MANAGEMENT ADMINISTRATION

DETAIL B-4-6-B TEMPORARY SOIL STABILIZATION MATTING SLOPE APPLICATION

STANDARD SYMBOL TSSMS - * lb/ft² (* INCLUDE SHEAR STRESS)

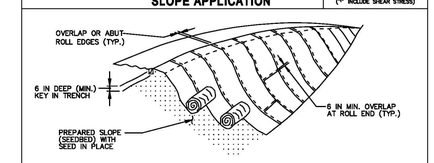

CONSTRUCTION SPECIFICATIONS

1. USE MATTING THAT HAS A DESIGN VALUE FOR SHEAR STRESS EQUAL TO OR HIGHER THAN THE SHEAR STRESS DESIGNATED ON APPROVED PLANS.
2. USE TEMPORARY SOIL STABILIZATION MATTING MADE OF DEGRADABLE (LASTS 6 MONTHS MINIMUM) NATURAL OR MAN-MADE FIBERS (MOSTLY ORGANIC). MAT MUST HAVE UNIFORM THICKNESS AND DISTRIBUTION OF FIBERS THROUGHOUT AND BE SMOLDER RESISTANT. CHEMICALS USED IN THE MAT MUST BE NON-LEACHING AND NON-TOXIC TO VEGETATION AND SEED GERMINATION AND NON-INJURIOUS TO THE SKIN. IF PRESENT, NETTING MUST BE EXTRUDED PLASTIC WITH A MAXIMUM MESH OPENING OF 2x2 INCHES AND SUFFICIENTLY BONDED OR SEWN ON 2 INCH CENTERS ALONG LONGITUDINAL AXIS OF THE MATERIAL TO PREVENT SEPARATION OF THE NET FROM THE PARENT MATERIAL.
3. SECURE MATTING USING STEEL STAPLES, WOOD STAKES, OR BIODEGRADABLE EQUIVALENT. STAPLES MUST BE "U" OR "T" SHAPED STEEL WIRE HAVING A MINIMUM GAUGE OF NO. 11 AND NO. 8 RESPECTIVELY. "U" SHAPED STAPLES MUST AVERAGE 1 TO 1½ INCHES WIDE AND BE A MINIMUM OF 6 INCHES LONG. "T" SHAPED STAPLES MUST HAVE A MINIMUM 8 INCH MAIN LEG, A MINIMUM 1 INCH SECONDARY LEG, AND A MINIMUM 4 INCH HEAD. WOOD STAKES MUST BE ROUGH-SAWN HARDWOOD, 12 TO 24 INCHES IN LENGTH, 1x3 INCH IN CROSS SECTION, AND WEDGE SHAPED AT THE BOTTOM.
4. PERFORM FINAL GRADING, TOPSOIL APPLICATION, SEEDBED PREPARATION, AND PERMANENT SEEDING IN ACCORDANCE WITH SPECIFICATIONS. PLACE MATTING WITHIN 48 HOURS OF COMPLETING SEEDING OPERATIONS UNLESS END OF WORKDAY STABILIZATION IS SPECIFIED ON THE APPROVED EROSION & SEDIMENT CONTROL PLAN.
5. UNROLL MATTING DOWNSLOPE. LAY MAT SMOOTHLY AND FIRMLY UPON THE SEEDED SURFACE. AVOID STRETCHING THE MATTING.
6. OVERLAP OR ABUT ROLL EDGES PER MANUFACTURER RECOMMENDATIONS. OVERLAP ROLL ENDS BY 6 INCHES (MINIMUM), WITH THE UPSLOPE MAT OVERLAPPING ON TOP OF THE DOWNSLOPE MAT.
7. KEY IN THE UPSLOPE END OF MAT 6 INCHES (MINIMUM) BY DIGGING A TRENCH, PLACING THE MATTING ROLL END IN THE TRENCH, STAPLING THE MAT IN PLACE, REPLACING THE EXCAVATED MATERIAL, AND TAMPING TO SECURE THE MAT END IN THE KEY.
8. STAPLE/STAKE MAT IN A STAGGERED PATTERN ON 4 FOOT (MAXIMUM) CENTERS THROUGHOUT AND 2 FOOT (MAXIMUM) CENTERS ALONG SEAMS, JOINTS, AND ROLL ENDS.
9. ESTABLISH AND MAINTAIN VEGETATION SO THAT REQUIREMENTS FOR ADEQUATE VEGETATIVE ESTABLISHMENT ARE CONTINUOUSLY MET IN ACCORDANCE WITH SECTION B-4 VEGETATIVE STABILIZATION.

MARYLAND STANDARDS AND SPECIFICATIONS FOR SOIL EROSION AND SEDIMENT CONTROL

U.S. DEPARTMENT OF AGRICULTURE NATURAL RESOURCES CONSERVATION SERVICE	2011	MARYLAND DEPARTMENT OF ENVIRONMENT WATER MANAGEMENT ADMINISTRATION

MONTGOMERY COUNTY DEPARTMENT OF PERMITTING SERVICES APPROVED FOR:

NOTE: MCDPS APPROVAL DOES NOT NEGATE THE NEED OF A MCDPS ACCESS PERMIT

STORMWATER MANAGEMENT: SWM RETROFIT	SEDIMENT CONTROL TECHNICAL REQUIREMENTS:	ADMINISTRATIVE REQUIREMENTS:
REVIEWED DATE	REVIEWED DATE	REVIEWED DATE
APPROVED DATE	APPROVED DATE	SEDIMENT CONTROL PERMIT NO.
246391 S.M.FILE NO.		MCDPS APPROVAL OF THIS PLAN WILL EXPIRE TWO YEARS FROM THE DATE OF APPROVAL IF THE PROJECT HAS NOT STARTED.

DPS APPROVAL OF A SEDIMENT CONTROL OR STORMWATER MANAGEMENT PLAN IS FOR DEMONSTRATED COMPLIANCE WITH MINIMUM ENVIRONMENTAL RUNOFF TREATMENT STANDARDS AND DOES NOT CREATE OR IMPLY ANY RIGHT TO DIVERT OR CONCENTRATE RUNOFF ONTO ANY ADJACENT PROPERTY WITHOUT THAT PROPERTY WITHOUT THAT PROPERTY OWNER'S PERMISSION. IT DOES NOT RELIEVE THE DESIGN ENGINEER OR OTHER RESPONSIBLE PERSON OF PROFESSIONAL LIABILITY OR ETHICAL RESPONSIBILITY FOR THE ADEQUACY OF THE DRAINAGE DESIGN AS IT AFFECTS UPHILL OR DOWNHILL PROPERTIES.

OWNER CONTACT:

Department of Environmental Protection
Montgomery County Maryland

MR. CRAIG CARSON
MONTGOMERY COUNTY DEPARTMENT OF ENVIRONMENTAL PROTECTION
255 ROCKVILLE PIKE
SUITE 120
ROCKVILLE, MD 20850
(240) 777-7713

CENTURY ENGINEERING
CONSULTING ENGINEERS – PLANNER
10710 GILROY ROAD
HUNT VALLEY, MD 21031

Biohabitats, Inc.
The Stables Building
2081 Clipper Park Road Baltimore MD 21211
tel: 410.554.0156 fax: 410.554.0168
www.biohabitats.com

MISS UTILITY

CALL "MISS UTILITY" AT 1-800-257-7777, 48 HOURS PRIOR TO THE START OF WORK. THE EXCAVATOR MUST NOTIFY ALL PUBLIC UTILITY COMPANIES WITH UNDERGROUND FACILITIES LOCATED BY THE UTILITY COMPANIES PRIOR TO COMMENCING EXCAVATION. THE EXCAVATOR IS RESPONSIBLE FOR COMPLIANCE WITH REQUIREMENTS OF CHAPTER 36A OF THE MONTGOMERY COUNTY CODE.

DATE	ISSUES/REVISIONS

GOSHEN BRANCH SWM RETROFIT

TASK ORDER 16

90% (FINAL) DESIGN

POTOMAC (10TH) ELECTION DISTRICT
MONTGOMERY COUNTY, MARYLAND

COLLINGWOOD ESC NOTES

PROJECT NO.: 28270.16	SCALE: SEE PLAN
DATE: 5/15/2015	BY: RT / CHECK: TT
SEAL:	DWG. NO.:

Findling,Inc. — BORING LOG

PROJECT: Goshen Branch SWM Retrofit (Pond No. 10824)		PROJECT NO.: 09-1013-16-3	BORING NO.: **B-1**
LOCATION: See Boring Location Plan	BEGUN: 12/17/13	COMPLETED: 12/17/13	HOLE SIZE:	GROUND ELEVATION: 560.0
COORDINATES:	DEPTH WATER ENC.: None	AT END DRILL: Dry	AT 24 HRS:	CAVED DEPTH: 14'
DRILLER: T. Mancuso	WEIGHT OF HAMMER: 140 lbs	HEIGHT OF FALL: 30 in	TYPE OF CORE:	BORING DEPTH (FT): 20
TYPE OF DRILL RIG & METHOD: CME-45, ATV (Track)	DEPTH TO ROCK:	LOGGED BY: J. Yadeta		PAGE NO.: 1

DEPTH (ft)	STRATA ELE./ DEPTH	GRAPHIC LOG	DESCRIPTION	SAMPLE NO.	SAMPLE LENGTH (in)	N-VALUE/ RQD (%)	SAMPLE TYPE AND DIAMETER	SAMPLE RECOVERY (in)	REMARKS:
0	560 / 559.8		Topsoil = 2"						Bag sample taken from: 0'- 5'
	558		Light Brown moist Clayey SILT, trace Roots (ML) FILL	S-1	24	2-2-5-7	DS	15	
			Yellowish Brown moist Sandy SILT, trace Gravel (ML) FILL	S-2	24	4-6-6-4	DS	16	
5	554			S-3	24	6-8-7-10	DS	18	
			Yellowish Brown moist Clayey SILT, trace fine Sand, trace Mica (ML) FILL	S-4	24	3-5-6-7	DS	15	
				S-5	24	6-9-12-11	DS	18	
10	550		Yellowish Brown moist Sandy CLAY, trace fine Sand FILL	S-6	24	5-4-3-5	DS	18	
				S-7	24	10-12-12-15	DS	18	
15	546		Yellowish Brown moist Clayey SILT, trace fine Sand (ML)	S-8	24	3-5-8-10	DS	18	
				S-9	24	4-8-8-13	DS	18	
				S-10	24	8-10-12-18	DS	18	
20	540		Bottom of Boring @ 20'						Boring backfilled with Bentonite upon completion
25									
30									

Findling,Inc. — BORING LOG

PROJECT: Goshen Branch SWM Retrofit (Pond No. 10824)		PROJECT NO.: 09-1013-16-3	BORING NO.: **B-2**
LOCATION: See Boring location plan	BEGUN: 12/16/13	COMPLETED: 12/16/13	HOLE SIZE:	GROUND ELEVATION: 540.0
COORDINATES:	DEPTH WATER ENC.: None	AT END DRILL: Dry	AT 24 HRS:	CAVED DEPTH: 8.5'
DRILLER: T. Moncuso	WEIGHT OF HAMMER: 140 lbs	HEIGHT OF FALL: 30 in	TYPE OF CORE:	BORING DEPTH (FT): 10
TYPE OF DRILL RIG & METHOD: CME-45, ATV (Track)	DEPTH TO ROCK:	LOGGED BY: J. Yadeta		PAGE NO.: 1

DEPTH (ft)	STRATA ELE./ DEPTH	GRAPHIC LOG	DESCRIPTION	SAMPLE NO.	SAMPLE LENGTH (in)	N-VALUE/ RQD (%)	SAMPLE TYPE AND DIAMETER	SAMPLE RECOVERY (in)	REMARKS:
0	540 / 539.8		Topsoil = 2" Brown moist SILT with trace to little Sand (ML) FILL	S-1	18	WOH-3-6-8	DS	12	Bag sample taken from: 0'-5'
				S-2	24	5-5-5-7	DS	18	
5				S-3	24	5-6-8-11	DS	15	
				S-4	24	5-5-7-9	DS	18	
				S-5	24	3-6-8-10	DS	18	
10	530		Bottom of Boring @ 10'						Boring backfilled with Bentonite upon completion.
15									
20									
25									
30									

MONTGOMERY COUNTY DEPARTMENT OF PERMITTING SERVICES APPROVED FOR:

NOTE: MCDPS APPROVAL DOES NOT NEGATE THE NEED OF A MCDPS ACCESS PERMIT

STORMWATER MANAGEMENT: SWM RETROFIT	SEDIMENT CONTROL TECHNICAL REQUIREMENTS:	ADMINISTRATIVE REQUIREMENTS:
REVIEWED DATE	REVIEWED DATE	REVIEWED DATE
APPROVED DATE	APPROVED DATE	SEDIMENT CONTROL PERMIT NO.
246391 S.M.FILE NO.		MCDPS APPROVAL OF THIS PLAN WILL EXPIRE TWO YEARS FROM THE DATE OF APPROVAL IF THE PROJECT HAS NOT STARTED.

DPS APPROVAL OF A SEDIMENT CONTROL OR STORMWATER MANAGEMENT PLAN IS FOR DEMONSTRATED COMPLIANCE WITH MINIMUM ENVIRONMENTAL RUNOFF TREATMENT STANDARDS AND DOES NOT CREATE OR IMPLY ANY RIGHT TO DIVERT OR CONCENTRATE RUNOFF ONTO ANY ADJACENT PROPERTY WITHOUT THAT PROPERTY WITHOUT THAT PROPERTY OWNER'S PERMISSION. IT DOES NOT RELIEVE THE DESIGN ENGINEER OR OTHER RESPONSIBLE PERSON OF PROFESSIONAL LIABILITY OR ETHICAL RESPONSIBILITY FOR THE ADEQUACY OF THE DRAINAGE DESIGN AS IT AFFECTS UPHILL OR DOWNHILL PROPERTIES.

OWNER CONTACT:

MR. CRAIG CARSON
MONTGOMERY COUNTY DEPARTMENT OF ENVIRONMENTAL PROTECTION
255 ROCKVILLE PIKE
SUITE 120
ROCKVILLE, MD 20850
(240) 777-7713

CENTURY ENGINEERING
CONSULTING ENGINEERS – PLANNER
10710 GILROY ROAD
HUNT VALLEY, MD 21031

Biohabitats, Inc.
The Stables Building
2081 Clipper Park Road Baltimore MD 21211
tel: 410.554.0156 fax: 410.554.0168
www.biohabitats.com

MISS UTILITY

CALL "MISS UTILITY" AT 1-800-257-7777, 48 HOURS PRIOR TO THE START OF WORK. THE EXCAVATOR MUST NOTIFY ALL PUBLIC UTILITY COMPANIES WITH UNDERGROUND FACILITIES LOCATED BY THE UTILITY COMPANIES PRIOR TO COMMENCING EXCAVATION. THE EXCAVATOR IS RESPONSIBLE FOR COMPLIANCE WITH REQUIRMENTS OF CHAPTER 36A OF THE MONTGOMERY COUNTY CODE.

DATE	ISSUES/REVISIONS

GOSHEN BRANCH SWM RETROFIT

TASK ORDER 16
90% (FINAL) DESIGN

POTOMAC (10TH) ELECTION DISTRICT
MONTGOMERY COUNTY, MARYLAND

COLLINGWOOD BORING LOGS

PROJECT NO.: 28270.16	SCALE: SEE PLAN
DATE: 5/15/2015	BY: RT / CHECK: TT
SEAL:	DWG. NO.:

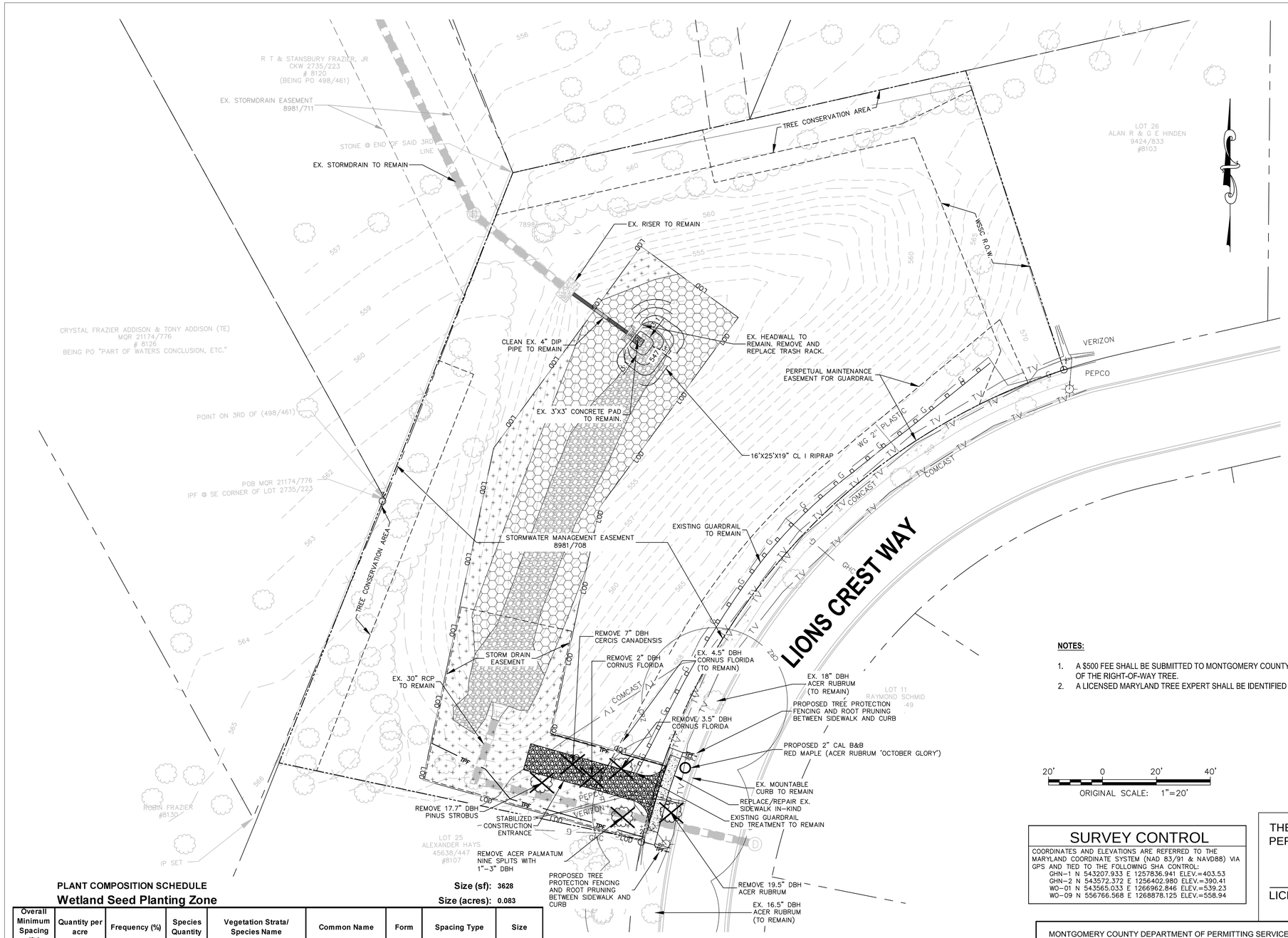

LEGEND

- INTERMITTENTLY FLOODED MEADOW ZONE 3,628 SF / 0.0.083 AC
- TURF GRASS ZONE 4,328 SF / 0.099 AC
- EXISTING TREE TO BE REMOVED
- EXISTING TREE TO REMAIN
- CRZ — CRITICAL ROOT ZONE
- TPF — PROPOSED TREE PROTECTION FENCE
- RP — PROPOSED ROOT PRUNING
- LOD — LIMIT OF DISTURBANCE
- 561 — PROPERTY BOUNDARY
- 561 — PROPOSED CONTOUR
- 561 — EXISTING CONTOUR
- EASEMENT BOUNDARY
- PROPOSED STORMDRAIN PIPE
- EXISTING STORMDRAIN PIPE

NOTES:

1. A $500 FEE SHALL BE SUBMITTED TO MONTGOMERY COUNTY PRIOR TO PERMIT ISSUANCE FOR REMOVAL OF THE RIGHT-OF-WAY TREE.
2. A LICENSED MARYLAND TREE EXPERT SHALL BE IDENTIFIED TO PERFORM THE PROPOSED TREE WORK.

20' 0 20' 40'

ORIGINAL SCALE: 1"=20'

DPS PERMIT NO. XXXXXX

MONTGOMERY COUNTY, MARYLAND DEPARTMENT OF PERMITTING SERVICES
FINAL APPROVAL
DATE: _____
BY: _____

*SUBJECT TO DEDICATION OF RIGHT OF WAY AND EASEMENTS PER COUNTY CODE SECTION 50.

SURVEY CONTROL

COORDINATES AND ELEVATIONS ARE REFERRED TO THE MARYLAND COORDINATE SYSTEM (NAD 83/91 & NAVD88) VIA GPS AND TIED TO THE FOLLOWING SHA CONTROL:

GHN-1 N 543207.933 E 1257836.941 ELEV.=403.53
GHN-2 N 543572.372 E 1256402.980 ELEV.=390.41
WO-01 N 543565.033 E 1266962.846 ELEV.=539.23
WO-09 N 556766.568 E 1268878.125 ELEV.=558.94

THE TREE WORK IN THE RIGHT-OF-WAY WILL BE PERFORMED BY:

_____

LICENSED MARYLAND TREE EXPERT

PLANT COMPOSITION SCHEDULE

Wetland Seed Planting Zone

Size (sf): 3628

Size (acres): 0.083

Overall Minimum Spacing (ft.)	Quantity per acre	Frequency (%)	Species Quantity	Vegetation Strata/ Species Name	Common Name	Form	Spacing Type	Size
HERBACEOUS SEED								
N/A	30	20	0.50	*Panicum rigidulum*	Redtop Panicgrass	SEED	LB of P.L.S. 76 %	N/A
		20	0.50	*Poa palustris*	Fowl Bluegrass			
		20	0.50	*Panicum virgatum*	Switchgrass			
		15	0.40	*Elymus virginicus*	Virginia Wild Rye			
		5	0.10	*Chamaecrista nictitans*	Sensitive Pea			
		5	0.10	*Desmodium canadense*	Showy Ticktrefoil			
		5	0.10	*Heliopsis helianthoides*	Oxeye Sunflower			
		5	0.10	*Agrostis perennans*	Autumn Bentgrass			
		5	0.10	*Scirpus atrovirens*	Green Bulrush			
		100	**2.4**	**TOTAL**				

P.L.S.= Pure Live Seed

PLANT COMPOSITION SCHEDULE

Turfgrass Seed Planting Zone (0.099 AC)

Seed Mix No.	Quantity (lbs)
SHA Turfgrass Seed Mix 920.06.07(a)	20

Total Application Rate of 200 lbs/ac or 4.6 lbs per 1,000 SF

Roadside Tree Replacement Planting

Botanical Name	Common Name	Size	Form	Quantity
Acer rubrum 'October Glory'	Red Maple	2" CAL	B&B	1

MONTGOMERY COUNTY DEPARTMENT OF PERMITTING SERVICES APPROVED FOR:

NOTE: MCDPS APPROVAL DOES NOT NEGATE THE NEED OF A MCDPS ACCESS PERMIT

STORMWATER MANAGEMENT: SWM RETROFIT	SEDIMENT CONTROL TECHNICAL REQUIREMENTS:	ADMINISTRATIVE REQUIREMENTS:
REVIEWED DATE	REVIEWED DATE	REVIEWED DATE
APPROVED DATE	APPROVED DATE	SEDIMENT CONTROL PERMIT NO.
246391 S.M.FILE NO.		MCDPS APPROVAL OF THIS PLAN WILL EXPIRE TWO YEARS FROM THE DATE OF APPROVAL IF THE PROJECT HAS NOT STARTED,

DPS APPROVAL OF A SEDIMENT CONTROL OR STORMWATER MANAGEMENT PLAN IS FOR DEMONSTRATED COMPLIANCE WITH MINIMUM ENVIRONMENTAL RUNOFF TREATMENT STANDARDS AND DOES NOT CREATE OR IMPLY ANY RIGHT TO DIVERT OR CONCENTRATE RUNOFF ONTO ANY ADJACENT PROPERTY WITHOUT THAT PROPERTY WITHOUT THAT PROPERTY OWNER'S PERMISSION. IT DOES NOT RELIEVE THE DESIGN ENGINEER OR OTHER RESPONSIBLE PERSON OF PROFESSIONAL LIABILITY OR ETHICAL RESPONSIBILITY FOR THE ADEQUACY OF THE DRAINAGE DESIGN AS IT AFFECTS UPHILL OR DOWNHILL PROPERTIES.

OWNER CONTACT:

MR. CRAIG CARSON
MONTGOMERY COUNTY DEPARTMENT OF ENVIRONMENTAL PROTECTION
255 ROCKVILLE PIKE
SUITE 120
ROCKVILLE, MD 20850
(240) 777-7713

CENTURY ENGINEERING
ONSULTING ENGINEERS – PLANNER
10710 GILROY ROAD
HUNT VALLEY, MD 21031

Biohabitats, Inc.
The Stables Building
2081 Clipper Park Road Baltimore MD 21211
tel: 410.554.0156 fax: 410.554.0168
www.biohabitats.com

MISS UTILITY

CALL "MISS UTILITY" AT 1-800-257-7777, 48 HOURS PRIOR TO THE START OF WORK. THE EXCAVATOR MUST NOTIFY ALL PUBLIC UTILITY COMPANIES WITH UNDERGROUND FACILITIES LOCATED BY THE UTILITY COMPANIES PRIOR TO COMMENCING EXCAVATION. THE EXCAVATOR IS RESPONSIBLE FOR COMPLIANCE WITH REQUIRMENTS OF CHAPTER 36A OF THE MONTGOMERY COUNTY CODE.

DATE	ISSUES/REVISIONS

GOSHEN BRANCH SWM RETROFIT

TASK ORDER 16

90% (FINAL) DESIGN

POTOMAC (10TH) ELECTION DISTRICT
MONTGOMERY COUNTY, MARYLAND

COLLINGWOOD
LANDSCAPE PLAN

PROJECT NO.: 28270.16 | SCALE: 1" =20'
DATE: 1/29 /2015 | BY: RT | CHECK: TT
SEAL: | DWG. NO.: