GENERAL CONSTRUCTION NOTES FOR WORK ON M-NCPPC PROPERTY:

1. A PRE-CONSTRUCTION MEETING MUST BE HELD PRIOR TO START OF WORK WITH A MINIMUM OF 72 HOURS PRIOR NOTICE. THE M-NCPPC PARK MANAGER, PARK INSPECTOR, AND PARK URBAN FORESTER SHALL BE REPRESENTED AT THE MEETING. PRIOR TO THIS MEETING, THE CONTRACTOR SHALL NOT PERFORM ANY CONSTRUCTION RELATED ACTIVITY AT THE PROJECT SITE, EXCEPT STAKEOUT AND FLAGGING OF THE LOD.

2. LOD IS SHOWN ON THE SITE PLANS. THE LOD SHALL BE ESTABLISHED AT THE PRE-CONSTRUCTION MEETING AND FENCED AS INDICATED IN NOTE #5. M-NCPPC RESERVES THE RIGHT TO ADJUST AND MODIFY THE LIMITS OF DISTURBANCE (LOD) IN THE FIELD ANY TIME DURING CONSTRUCTION TO MINIMIZE IMPACTS OF WORK TO INFRASTRUCTURE AND NATURAL RESOURCES THAT ARE TO REMAIN.

3. NO CLEARING, GRUBBING, OR GRADING SHALL COMMENCE UNTIL THE LOD ARE STAKED IN THE FIELD AND ARE APPROVED BY THE PARK INSPECTOR AS WELL AS ANY OTHER APPLICABLE PERMITTING AGENCIES. AFTER THE LOD IS APPROVED, NO DISTURBANCE WILL BE ALLOWED OUTSIDE OF THE APPROVED LIMITS. ANY ITEMS DISTURBED OUTSIDE OF THE APPROVED LIMITS WILL BE REPLACED AT THE CONTRACTOR'S EXPENSE.

4. CONTRACTOR SHALL BE SOLELY RESPONSIBLE FOR IDENTIFYING THE LOCATION OF ALL EXISTING UTILITIES PRIOR TO START OF THE CONSTRUCTION RELATED WORK AND SHALL COORDINATE THE WORK WITH PARK INSPECTOR. THE CONTRACTOR SHALL MAINTAIN PROPER CLEARANCES BETWEEN ALL EXISTING AND PROPOSED UTILITIES AT ALL TIMES AS REQUIRED BY THE UTILITY COMPANIES. ANY COST ASSOCIATED WITH THE REPAIR OR REPLACEMENT OF UTILITIES DAMAGED BY THE CONTRACTOR SHALL BE THE SOLE RESPONSIBILITY OF THE CONTRACTOR. ANY DAMAGE MADE TO THE UTILITY SHALL BE DOCUMENTED IMMEDIATELY, REPORTED TO THE PARK INSPECTOR, AND REPAIRED ON AN EMERGENCY BASIS PER THE LATEST SPECIFICATIONS OF THE CONCERNED UTILITY AND COMPLETED WORK SHALL BE APPROVED BY THE CONCERNED UTILITY.

5. THE ENTIRE LOD SHALL BE FENCED AS DIRECTED BY THE PARK INSPECTOR. WHERE SILT FENCE, SUPER SILT FENCE, OR TREE PROTECTION FENCE IS NOT REQUIRED, ORANGE BLAZE SAFETY FENCE MAY BE USED.

6. ALL WORK SHALL BE PERFORMED IN ACCORDANCE WITH LATEST APPLICABLE CODES, STANDARDS, AND SPECIFICATIONS OF M-NCPPC, MONTGOMERY COUNTY, MARYLAND, STATE, AND FEDERAL REQUIREMENTS.

7. EROSION AND SEDIMENT CONTROL DEVICES SHALL MEET CURRENT MONTGOMERY COUNTY DEPARTMENT OF PERMITTING SERVICES STANDARDS AND DIRECTIVES. THESE SHALL BE APPROVED BY APPLICABLE PERMITTING AUTHORITIES PRIOR TO THE START OF CONSTRUCTION.

8. BEFORE START OF CONSTRUCTION, ON-SITE REPRESENTATIVE OF THE CONTRACTOR SHALL HAVE A CERTIFICATE OF ATTENDANCE AT THE DEPARTMENT OF NATURAL RESOURCES APPROVED TRAINING PROGRAM FOR THE CONTROL OF SEDIMENT AND EROSION.

9. CONTRACTOR SHALL BE RESPONSIBLE FOR MAINTAINING SAFE FACILITY ACCESS THROUGHOUT CONSTRUCTION AND PROVIDE ANY APPROPRIATE DETOURS, TEMPORARY FACILITIES, AND SIGNAGE AS REQUESTED BY THE PARK MANAGER.

10. SLIGO CREEK TRAIL IS NOT TO BE CLOSED AT ANY TIME. TEMPORARY DETOURS MUST BE PROVIDED IN COORDINATION WITH PARK INSPECTOR AND PARK MANAGER.

11. WHERE DISTURBED FOR PIPE PLACEMENT, SLIGO CREEK TRAIL IS TO BE FULLY RESTORED TO PARK INSPECTOR SATISFACTION.

12. ALL EXISTING CONDITIONS TO REMAIN SHALL BE VERIFIED, PHOTOGRAPHED, AND DOCUMENTED PRIOR TO CONSTRUCTION. IF THEY ARE DIFFERENT THE PARK INSPECTOR SHALL BE NOTIFIED BEFORE PROCEEDING WITH THE WORK. SITE RESTORATION AND REPAIR/REPLACEMENT OF DAMAGED INFRASTRUCTURE SHALL BE IN ACCORDANCE WITH M-NCPPC DETAILS, STANDARDS, AND SPECIFICATIONS AT THE DIRECTION OF THE PARK INSPECTOR AT NO COST TO M-NCPPC. SITE RESTORATION IS TO BE ACHIEVED TO THE SATISFACTION OF THE PARK INSPECTOR PRIOR TO DEMOBILIZATION.

13. PRIOR TO VEGETATIVE STABILIZATION, ALL DISTURBED AREAS MUST BE TOPSOILED PER THE MONTGOMERY COUNTY STANDARDS AND SPECIFICATIONS FOR TOPSOIL. IF ONSITE MATERIALS DO NOT MEET THE REQUIREMENTS OF TOPSOIL, COORDINATE WITH M-NCPPC REGARDING TILLING-IN OF CERTIFIED COMPOST TO ONSITE SOILS IN ORDER TO MEET SPECIFICATIONS.

14. STAGING AREAS, STORAGE AREAS AND ACCESS ROUTES SHALL BE DETERMINED IN FIELD AND APPROVED BY THE PARK INSPECTOR TO MINIMIZE IMPACTS.

15. EQUIPMENT RESTRICTIONS (E.G. 8 P.S.I. OR LESS) MAY BE REQUIRED BY M-NCPPC IN SENSITIVE AREAS.

16. THE CONTRACTOR SHALL COORDINATE WITH MONTGOMERY COUNTY DEPARTMENT OF PERMITTING SERVICES INSPECTOR AND/OR PARK INSPECTOR ON THE USE OF TRENCHLESS SILT FENCES AND/OR DAILY STABILIZATION TO AVOID CUTTING THROUGH MATURE TREES. WHERE TRENCHING IS REQUIRED, ROOT PRUNE PRIOR TO EXCAVATION FOR TRENCH AT THE DIRECTION OF THE PARK URBAN FORESTER.

17. SPECIAL PROTECTION MEASURES SHALL BE PROVIDED AS DIRECTED IN THE FIELD DURING CONSTRUCTION BY PARK INSPECTOR OR PARK URBAN FORESTER. THESE MAY INCLUDE, BUT NOT BE LIMITED TO, ROOT PRUNING, 12-INCH THICK MULCH LAYER ACCESS BEDDING, HARDWOOD MATS, ADDITIONAL TREE PROTECTION FENCING, TREE PLANKING, AND ADDITIONAL SEDIMENT CONTROLS.

18. TREE PROTECTION FENCING SHOULD BE 14-GAUGE WELDED WIRE TYPE (WITH METAL STAKES AT 10 FEET O.C.) AND MUST BE MAINTAINED THROUGHOUT CONSTRUCTION. TREE SAVE AREA SIGNAGE SHOULD BE POSTED EVERY 30 FEET ALONG FENCING. TREE PROTECTION FENCE SHOULD BE INSTALLED BY THE CONTRACTOR AND INSPECTED BY THE M-NCPPC PARK URBAN FORESTER PRIOR TO THE START OF CONSTRUCTION.

19. M-NCPPC MAY INSPECT CONDITION OF TREES THROUGHOUT CONSTRUCTION AND REQUIRE REPAIR, REMOVAL, AND/OR REPLACEMENT OF ANY DAMAGED TREES AT NO COST TO M-NCPPC.

20. TREES TO BE REMOVED ARE INDICATED WITH AN "X". NO OTHER TREES OF ANY SIZE SHALL BE DAMAGED OR REMOVED DURING CONSTRUCTION UNLESS APPROVED BY PARK URBAN FORESTER.

21. ALL PLANTING SUBSTITUTIONS MUST BE APPROVED BY PARK URBAN FORESTER. PLANT MATERIALS AND LOCATIONS SHOULD BE INSPECTED BY PARK URBAN FORESTER PRIOR TO INSTALLATION.

22. CONTRACTOR SHALL PROVIDE 4-FOOT HIGH (1-FOOT MINIMUM DIAMETER) 14-GAUGE WELDED WIRE DEER PROTECTION CAGES WITH MINIMUM OF ONE SUPPORT STAKE (OR TO CURRENT M-NCPPC SPECIFICATIONS) FOR ALL LANDSCAPE AND REFORESTATION TREES AND SHRUBS TO PREVENT DAMAGE BY DEER. TUBEX SHALL NOT BE USED AS A SUBSTITUTE.

23. NOTES AND DETAILS SHOWN ON THE DRAWINGS ARE TYPICAL UNLESS OTHERWISE SHOWN OR NOTED.

24. THIS SITE IS LOCATED IN THE NORTHWEST BRANCH WATERSHED OF MONTGOMERY COUNTY. RUNOFF FROM THIS SITE DRAINS INTO SLIGO CREEK.

25. THE CONTRACTOR SHALL DEVELOP A TRAIL DETOUR TO SAFELY CONVEY PEDESTRIAN TRAFFIC ON THE SLIGO CREEK TRAIL DURING CONSTRUCTION ACTIVITIES ASSOCIATED WITH THIS PROJECT. IT IS EXPECTED THAT THIS DETOUR WILL LAST NO MORE THAN ½ A WORKDAY AT EACH CROSSING LOCATION. THE TRAIL DETOUR SHALL BE APPROVED BY PARK INSPECTOR. THE TRAIL DETOUR SHALL BE MAINTAINED BY THE CONTRACTOR.

26. THE CONTRACTOR SHALL BE RESPONSIBLE FOR ANY DAMAGE TO THE ASPHALT TRAIL WHILE PERFORMING WORK ASSOCIATED WITH THIS PERMIT. ANY DAMAGE TO THE ASPHALT TRAIL SHALL BE REPAIRED BY THE CONTRACTOR TO THE SATISFACTION OF PARKS.

SEQUENCE OF CONTRUCTION:
CONTRACTOR TO PROVIDE TEMPORARY STAGING AREAS NEAR INDIVIDUAL FACILITY SITES, STABILIZED WITH MULCH. THESE STAGING AREAS ARE NOT TO BE CONSIDERED PART OF THE LIMITS OF DISTURBANCE AND NOT COUNTED AGAINST THE MAXIMUM 5,000 SF DISTURBED AREA REQUIREMENT OF THE PERMIT. STAGING AREAS ARE TO BE REMOVED AND RESTORED TO ORIGINAL CONDITION UPON COMPLETION OF WORK AT A FACILITY UNLESS THEY WILL BE USED AS A STAGING AREA FOR ANOTHER FACILITY.

1. PRIOR TO CLEARING OF TREES, INSTALLING SEDIMENT CONTROL MEASURES, OR GRADING, A PRE-CONSTRUCTION MEETING MUST BE CONDUCTED ON SITE WITH THE OWNER'S REPRESENTATIVE, THE CONTRACTOR, AND THE SITE ENGINEER.
2. THE PROJECT IS A MOVING PROJECT INVOLVING MULTIPLE FACILITIES. NO MORE THAN 5,000 SF SHALL BE DISTURBED AT ANY ONE TIME. CONSTRUCTION OF EACH LID FACILITY WILL FOLLOW A BASIC SEQUENCE OUTLINED BELOW:
   A. THE LIMITS OF DISTURBANCE MUST BE FIELD-MARKED PRIOR TO CLEARING OF TREES, INSTALLATION OF SEDIMENT CONTROL MEASURES, CONSTRUCTION, OR OTHER LAND DISTURBING ACTIVITIES.
   B. REVIEW ACCOMMODATIONS TO KEEP A NEW SWM OFFLINE TO THE GREATEST EXTENT PRACTICAL UNTIL IT IS READY TO RECEIVE STORM FLOWS.
   C. INSTALL MAINTENANCE OF TRAFFIC MEASURES.
   D. DEMOLISH AND REMOVE EXISTING INFRASTRUCTURE AS NOTED ON THE PLAN.
   E. IF FACILITY REQUIRES NEW STORM DRAIN INLET STRUCTURE TO BE INSTALLED OR REPLACED:
      I. EXCAVATE AND REMOVE EXISTING INLET STRUCTURE. TAKE CARE NOT TO DAMAGE EXISTING STORM DRAIN PIPE.
      II. INSTALL NEW STORM DRAIN INLET STRUCTURE AND ALL APPURTENANCES.
   F. IF FACILITY REQUIRES THAT NEW CURB AND GUTTER BE INSTALLED, INSTALL NEW CURB AND GUTTER. PROVIDE SAND BAG DIVERSIONS IN ANY CURB OPENINGS TO FACILITY TO PREVENT GUTTER FLOWS FROM ENTERING THE WORK AREA.
   G. COMPLETE EXCAVATION OF THE FACILITIES AND HAUL OFF EXCESS MATERIAL.
   H. INSTALL UNDER DRAINS (IF REQUIRED BY PLAN) AND FACILITY MEDIA (IF REQUIRED BY PLAN). COMPLETE SOIL AMENDMENTS (IF REQUIRED BY PLAN).
   I. FINAL GRADE FACILITY.
   J. INSTALL PLANTINGS AND OTHER LANDSCAPING.
   K. PERMANENTLY STABILIZE ENTIRE DISTURBED AREA.

CONSTRUCTION NOTES.
1. THE UNDERGROUND UTILITY INFORMATION WAS OBTAINED FROM A/I DATA. THE TEST PITS LOCATIONS WERE BASED ON INITIAL DESIGN LAYOUT WHICH MIGHT NOT MATCH WHERE THE UTILITY CROSSINGS ARE AT THE FINAL DESIGN. SOME ASSUMPTIONS WERE MADE AT THE DESIGN. PRIOR TO BEGINNING CONSTRUCTION, THE CONTRACTOR SHALL VERIFY AND FIELD LOCATE EXACT LOCATION AND ELEVATION OF ALL EXISTING UTILITIES AT UTILITY CROSSINGS. THE CONTRACTOR SHALL HAND DIG AROUND UTILITIES LOCATED IN THE VICINITY OF THE PROPOSED EXCAVATION.

2. CONTRACTOR SHALL PROVIDE ONE FOOT MIN. VERTICAL CLEARANCE BETWEEN THE TOP OF UTILITY AND BOTTOM OF SWM FACILITY. SEE MSHA-UD3 FOR TYPICAL UTILITY CROSSING DETAIL. ADJUST DEPTH OF SWM FACILITY TO MAINTAIN 12" MIN. VERTICAL CLEARANCE IF NECESSARY AT CONSTRUCTION.

3. UNLESS SPECIFIED ON THE PLAN WITH SWALE INVERT AND BOTTOM ELEVATION, THE LONGITUDINAL SLOPE OF SWALE SHOULD MATCH ROAD SLOPE.

4. CONTRACTOR SHALL PROVIDE MINIMUM COVER FOR EXISTING UTILITIES.

5. CONTRACTOR TO PROVIDE 12" MIN. VERTICAL CLEARANCE BETWEEN STORM DRAIN AND UTILITIES. SPECIAL CROSSING TREATMENT METHODS LIKE ENCASEMENT AND/OR SPECIAL BEDDING SHALL BE FOLLOWED.

6. SPOT SHOWN AT INLET AND OUTLET MEAN INVERTS OF INLET OR OUTLET. SPOTS SHOWN IN EACH FACILITY CELL ARE SWALE INVERTS (FACILITY TOPS).

7. SWM#5 WAS DESIGNED BASED ON ASSUMPTION OF 3" GAS ABANDONED. CONTRACTOR SHALL VERIFY THE ASSUMPTION PRIOR TO PROCEEDING WITH CONSTRUCTION OF SWM #5. IF 3" GAS IS STILL ACTIVE, CONTRACTOR SHALL PERFORM SHALLOW EXCAVATION.

LEGEND

EXISTING CONTOUR
PROPOSED CONTOUR
PROPOSED SPOT ELEVATION
EX. SEWER
EX. WATER
EX. WATER STRUCTURE
EX. TELEPHONE
EX. GAS LINE
PROPERTY /RW LINE
RAIN STORE
STONE TRENCH
SW-330 A INLET
SB1 SOIL BORING
PROPOSED STORM DRAIN
REMOVE EX. IMPERVIOUS, SEED & MULCH
SHALLOW EXCAVATION TO AVOID CONFLICT WITH UTILITY
PLANTING MEIA BOUNDARY STORMWATER FACILITY
REPLACE PEDESTRIAN RAMP /SIDEWALK /SIDEWALK
B26 TEST PIT
PROPOSED STORM DRAIN STRUCTURE
L.P. H.P. LOW POINT, HIGH POINT
PROPOSED CURB
EX. TREE TO REMAIN
TREE REMOVAL

Dennis Avenue Phase 5 LID Design Summary Sheet

SWM #	Drainage	Impervious	Treatment Required by ESD			Type of	Proposed **		Note
	Area (ac)	Area (ac)	WQv (CF)	PE (in)*	ESDV (CF)*	SWM	ESDV (CF)	PE (in)	
2	0.30	0.03	218	1.00	152	8' X 4' Filterra	218	1.00	with 8' x 4' stone trench
2A	0.39	0.22	790	1.80	1,421	12" X 4' Filterra	790	1.00	with 12' x 4' stone trench
5	2.35	0.54	2,191	1.20	2,629	Curb bumpout bioswale	1120	0.51	with 96 units rainstore
6	0.93	0.21	842	1.20	1,010	Stone trench with rainstore	535	0.64	with 110 units rainstore
16	0.70	0.29	1,074	1.80	1,934	Curb bumpout bioswales	1701	1.6	4.0' media and stone
21	0.60	0.41	1,448	1.80	2,607	Curb bumpout bioswales	1363	0.94	4.0' media and stone
27	2.54	0.92	3,467	1.6	5,547	Step-bioretention	5712	1.65	4.25' media and stone with underdrain
28	1.82	0.55	2,127	1.20	2,553	Step-bioretention	3,045	1.43	3.1'-3.5' media and stone with underdrain
TOTAL	9.63	3.17	12157	1.47	17853		14484	1.19	

* Requirement for Environmental Site Design (ESD) to get water quality, channel protection and recharge volume
** The volume = ponding volume + storage within planting media & stone assuming 40% void .
SWM 16 = SWM 16A + SWM16B
SWM 21 = SWM 21A+SWM21B

TRAFFIC CONTROL TABLE

SWM #	STANDARD TCP #	SWM #	STANDARD TCP #
2	102.01	2A	102.01
5	105.07	6	102.01
16A	105.07	16B	105.07
21A	105.07	21B	105.07
27	101.02 & 102.01	28	101.02 & 102.01

THE MARYLAND-NATIONAL CAPITAL PARK AND PLANNING COMMISSION, DEPARTMENT OF PARK AND PLANNING

M-NCPPC PERMIT NO. 2012.32
M-NCPPC PARK FACILITY CODE P60
REVIEWED BY ____
APPROVED BY ____
CHIEF, CONSTRUCTION SECTION
DATE APPROVED ____
M-NCPPC PERMIT SHEET # ____ OF ____

THIS IS NOT A PERMIT TO BEGIN CONSTRUCTION

This approval is for technical review only. For permit For permit information, contact Jay Childs, Construction Supervisor at (301)495-2574.

Gannett Fleming
GPI GREENMAN-PEDERSEN, INC.

MONTGOMERY COUNTY
DEPARTMENT OF TRANSPORTATION
ROCKVILLE, MARYLAND
Accepted
Chief, Maintenance Division Date

MONTGOMERY COUNTY
DEPARTMENT OF TRANSPORTATION
GAITHERSBURG, MARYLAND
Reviewed
Chief, Transportation Planning and Design Section Date

ROW LID RETROFIT DENNIS AVENUE

PHASE 1 & 2 REVISED

KEY MAP SHEET

SCALE : AS SHOWN
PS00

Designed by: ZK Drawn by: ZK/KK Checked by: WRP

Project No. : 2008037.00 Task 112 SHEET 1 of 10

FILE: N:\2008\2008037\2008037.00\2008037.00 Tsk 120 Dennis Avenue Phase 5 & 6\DGN\pHD-key map_DENNIS_AVEph5.dgn
DATE: Monday, February 25, 2013 AT 03:34 PM
...\pHD-key map_DENNIS_AVEph5.dgn 2/25/2013 3:34:04 PM

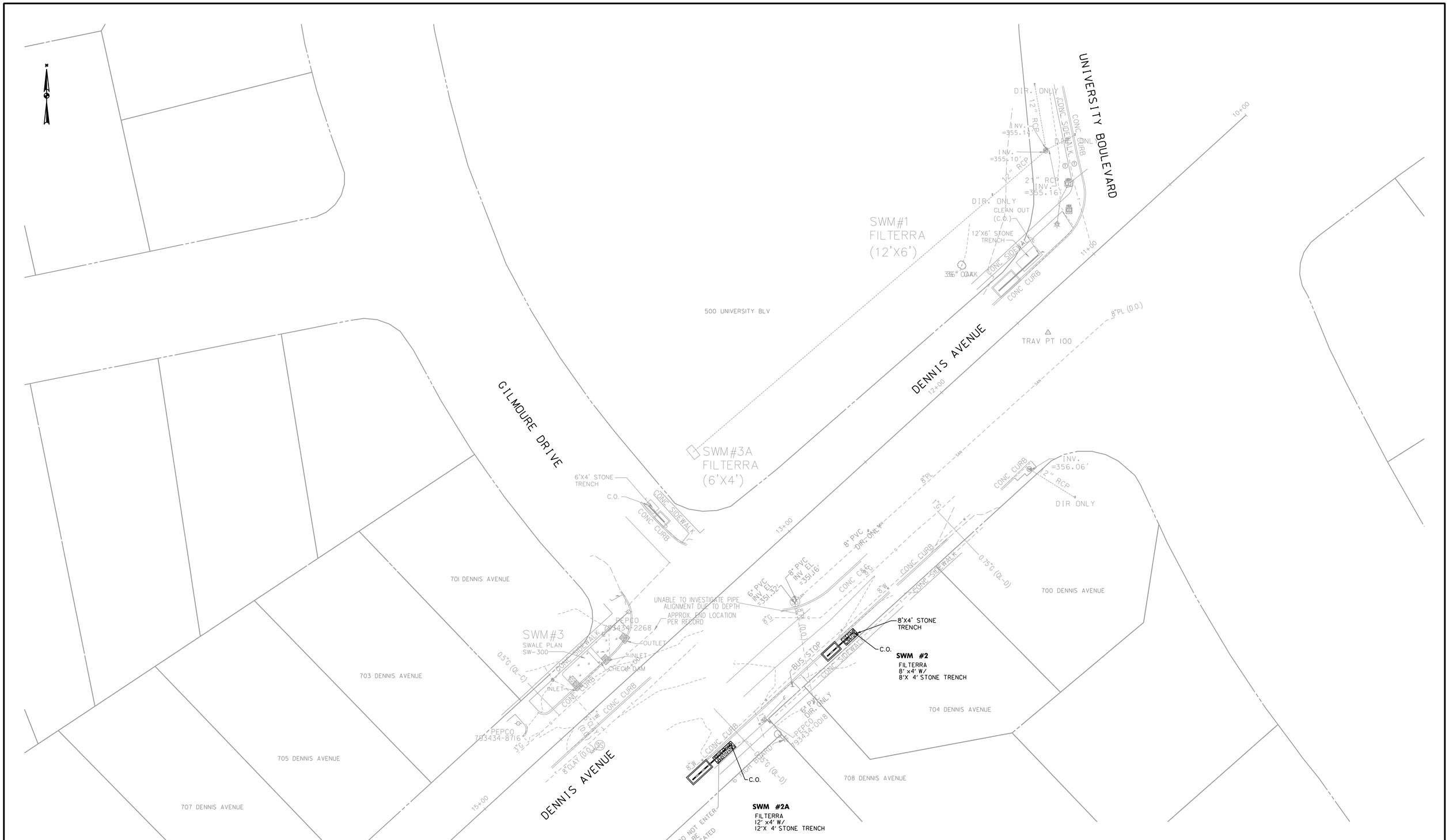

Gannett Fleming

GPI Greenman-Pedersen, Inc.

MONTGOMERY COUNTY DEPARTMENT OF TRANSPORTATION ROCKVILLE, MARYLAND	MONTGOMERY COUNTY DEPARTMENT OF TRANSPORTATION GAITHERSBURG, MARYLAND	ROW LID RETROFIT DENNIS AVENUE
Accepted	Reviewed	PHASE 1 & 2 REVISED
Chief, Maintenance Division — Date	Chief, Transportation Planning and Design Section — Date	PLAN SHEET 2
		SCALE : AS SHOWN
	Designed by: ZK Drawn by: ZK/KK Checked by: WRP	Project No. : 2008037.00 Task 112 SHEET 2 of 10

FILE: N:\2008\2008037\2008037.00\2008037.00 Tsk 120 Dennis Avenue Phase 5 & 6\DGN\pHD-0001_DENNIS_AVEph5.dgn
DATE: Monday, February 25, 2013 AT 03:36 PM
...\DGN\pHD-0001_DENNIS_AVEph5.dgn 2/25/2013 3:36:14 PM

715 DENNIS AVENUE

717 DENNIS AVENUE

722 DENNIS AVENUE

724 DENNIS AVENUE

726 DENNIS AVENUE

728 DENNIS AVENUE

730 DENNIS AVENUE

734 DENNIS AVENUE

736 DENNIS AVENUE

738 DENNIS AVENUE

740 DENNIS AVENUE

10203 PROCTER STREET

10201 PROCTER STREET

801 DENNIS AVENUE

CALUMET DRIVE

DENNIS AVENUE

PROCTER STREET

SHALLOW EXCAVATION
SWALE INV. = 356.6
MIN. BOTTOM OF FACILITY = 354.8

SHALLOW EXCAVATION
SWALE INV. = 356.1
MIN. BOTTOM OF FACILITY = 354.3

MH (FULL OF DEBRIS) DIR. ONLY

SHALLOW EXCAVATION
SWALE INV. = 355.6
MIN. BOTTOM OF FACILITY = 354.1

SWM #4

A-5 INLET MC-501.01 WITH
W =3.0' MIN
TOP = 358.45 (UPPER
END), 356.25 (LOWER END)
PROVIDE 36" (W) X 3"(H)
OPENING ON THE SIDE, INV.
355.86

SAW CUT EXISTING PIPE.
CONTRACTOR TO FIELD
LOCATE INLET AND
PROVIDE WATERTIGHT
CONNECTION TO EX. 15"
RCP

REMOVE
CONC. INLET

CHECK DAM
& INLET

24" OAK DIR. ONLY

15" RCP

INV.=352.65'

6" PVC
IN. 352.8

SWM #7

CHECK DAM

BUS STOP
TO BE RELOCATED

INLET

CHECK DAM

6" PVC UNDERDRAIN

NEW LOCATION FOR
BUS STOP (TO BE
FIELD LOCATED)

4' HIGH CHAIN LINK

INV.
=347.32'

INV.
=347.09'

3"G (POSSIBLY
ABANDONED)

INV.
=347.52

INV. =353.46

INV. =354.53'

INV. =353.54

LOCATION PER
RECORD

TRAV PT 1022

PROVIDE WATERTIGHT
CONNECTION TO EX. INLET

6" PVC UNDERDRAIN
OBSERVATION WELL

15" RCP
INV.=354.01'

110 UNIT RAINSTORE
(11 UNIT L X 2 UNIT W X 5 UNIT D)

10' L PERF. FEEDER PIPE (10" PVC)
W/ END CAP

MODIFIED SW-330A
2.5' WIDE

MODIFIED "D" INLET
WITH TRASH RACK

SWM #6

7' W X 36' L STONE
TRECH WITH 110 UNIT
RAINSTORE

APPROX. END
LOCATION PER
RECORD

NEW CROSS WALK
THROUGH MEDIAN
(TO BE FIELD
LOCATED)

NEW LOCATION FOR
BUS STOP
(TO BE FIELD
LOCATED)

NO PARKING

DIR. ONLY

3"G (POSSIBLY
ABANDONED)

INLET SW-323

REMOVE AND REPLACE
CONCRETE SIDEWALK

SW-330A

96 RAINSTORE UNITS
(8 UNIT LX 3 UNIT W X 4 UNIT D)

SWM #5

MODIFIED CURB BUMP OUT BIOSWALE (SEE DT03)
WITH 96 UNITS RAINSTORE
DEPTH OF FACILITY = 3.25' EXCEPT WHERE INDICATED

OUTLET SW-323

SHALLOW EXCAVATION.
MAX. 2.5' MEDIA AND STONE

BUS STOP

18+00

19+00

20+00

21+00

22+00

23+00

24+00

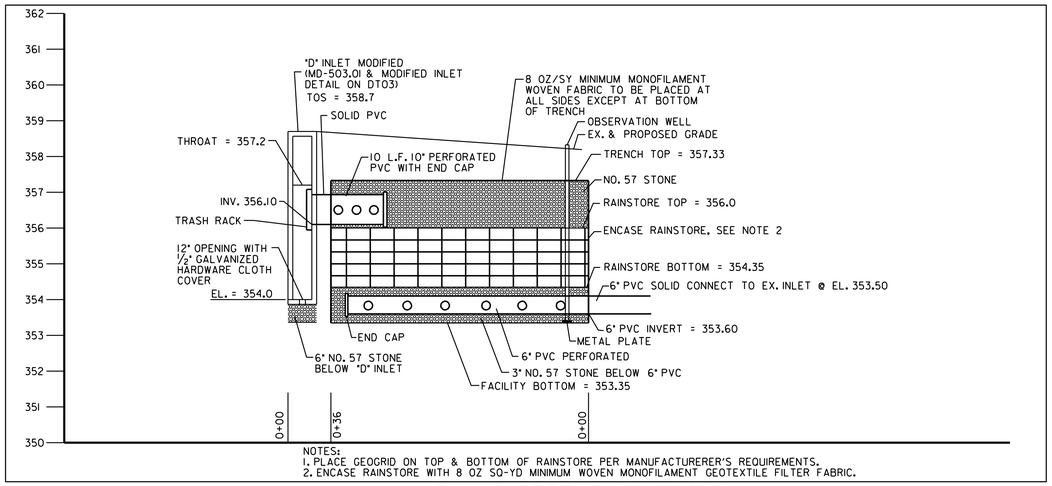

NOTES:
1. PLACE GEOGRID ON TOP & BOTTOM OF RAINSTORE PER MANUFACTURERER'S REQUIREMENTS.
2. ENCASE RAINSTORE WITH 8 OZ SO-YD MINIMUM WOVEN MONOFILAMENT GEOTEXTILE FILTER FABRIC.

SWM#6 PROFILE HORIZ. SCALE: 1"=10' VERT. SCALE: 1"=2'

20' 0 20' 40'
SCALE: 1" = 20'

Gannett Fleming

GPI GREENMAN-PEDERSEN, INC.

MONTGOMERY COUNTY DEPARTMENT OF TRANSPORTATION ROCKVILLE, MARYLAND	MONTGOMERY COUNTY DEPARTMENT OF TRANSPORTATION GAITHERSBURG, MARYLAND	ROW LID RETROFIT DENNIS AVENUE
Accepted	Reviewed	PHASE 1 & 2 REVISED
Chief, Maintenance Division — Date	Chief, Transportation Planning and Design Section — Date	PLAN SHEET 3
		SCALE : AS SHOWN
Designed by: ZK Drawn by: ZK/KK Checked by: WRP		Project No. : 2008037.00 Task 112 SHEET 3 of 10

FILE: N:\2008\2008037\2008037.00\2008037.00 Tsk 120 Dennis Avenue Phase 5 & 6\DGN\pHD-0002_DENNIS_AVEph5.dgn
DATE: Monday, February 25, 2013 AT 03:37 PM
...\DGN\pHD-0002_DENNIS_AVEph5.dgn 2/25/2013 3:37:37 PM

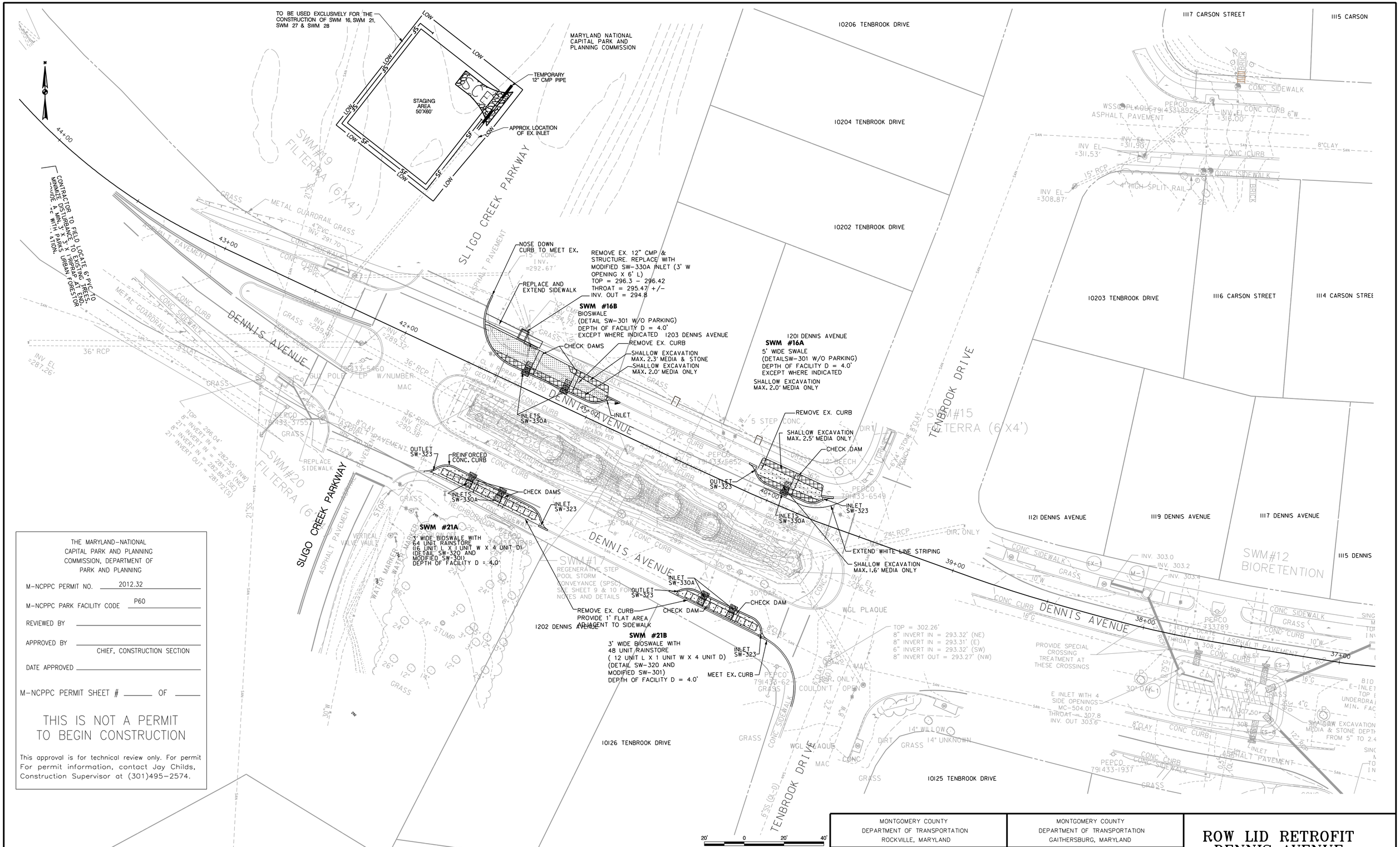

THE MARYLAND-NATIONAL CAPITAL PARK AND PLANNING COMMISSION, DEPARTMENT OF PARK AND PLANNING

M-NCPPC PERMIT NO. 2012.32

M-NCPPC PARK FACILITY CODE P60

REVIEWED BY _____

APPROVED BY _____
CHIEF, CONSTRUCTION SECTION

DATE APPROVED _____

M-NCPPC PERMIT SHEET # _____ OF _____

THIS IS NOT A PERMIT TO BEGIN CONSTRUCTION

This approval is for technical review only. For permit For permit information, contact Jay Childs, Construction Supervisor at (301)495-2574.

Gannett Fleming

GPI GREENMAN-PEDERSEN, INC.

MONTGOMERY COUNTY DEPARTMENT OF TRANSPORTATION ROCKVILLE, MARYLAND	MONTGOMERY COUNTY DEPARTMENT OF TRANSPORTATION GAITHERSBURG, MARYLAND
Accepted	Reviewed
Chief, Maintenance Division — Date	Chief, Transportation Planning and Design Section — Date

Designed by: ZK Drawn by: ZK/KK Checked by: WRP

ROW LID RETROFIT DENNIS AVENUE

PHASE 1 & 2 REVISED

PLAN SHEET 4

SCALE : AS SHOWN

Project No. : 2008037.00 Task 112 SHEET 4 of 10

FILE: N:\2008\2008037\2008037.00\2008037.00 Tsk 120 Dennis Avenue Phase 5 & 6\DGN\pHD-0003_DENNIS_AVEph5.dgn
DATE: Monday, February 25, 2013 AT 03:42 PM
...\DGN\pHD-0003_DENNIS_AVEph5.dgn 2/25/2013 3:42:22 PM

SEQUENCE OF CONSTRUCTION FOR SWM#27

PHASE	STA	OFFSET(FT)	AREA (SF)
1	45+62 TO 47+16	49	4607
2	47+16 TO 48+08	57	4990
3	48+08 TO 49+06	64	2468

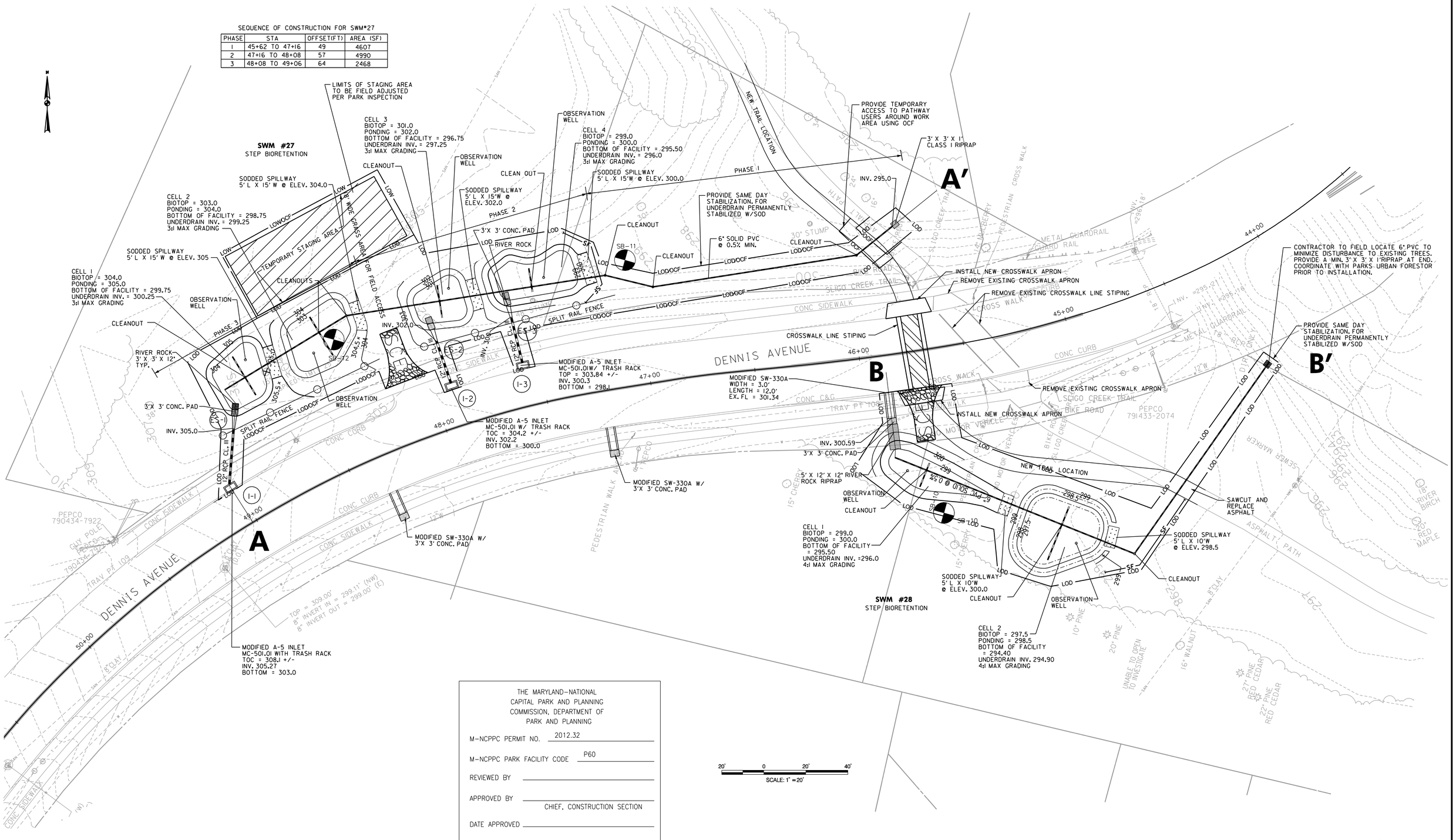

THE MARYLAND-NATIONAL CAPITAL PARK AND PLANNING COMMISSION, DEPARTMENT OF PARK AND PLANNING

M-NCPPC PERMIT NO. 2012.32

M-NCPPC PARK FACILITY CODE P60

REVIEWED BY _____

APPROVED BY _____
CHIEF, CONSTRUCTION SECTION

DATE APPROVED _____

M-NCPPC PERMIT SHEET # _____ OF _____

THIS IS NOT A PERMIT TO BEGIN CONSTRUCTION

This approval is for technical review only. For permit For permit information, contact Jay Childs, Construction Supervisor at (301)495-2574.

Gannett Fleming

GPI GREENMAN-PEDERSEN, INC.

MONTGOMERY COUNTY
DEPARTMENT OF TRANSPORTATION
ROCKVILLE, MARYLAND

Accepted

Chief, Maintenance Division — Date

MONTGOMERY COUNTY
DEPARTMENT OF TRANSPORTATION
GAITHERSBURG, MARYLAND

Reviewed

Chief, Transportation Planning and Design Section — Date

Designed by: ZK Drawn by: ZK/KK Checked by: WRP

ROW LID RETROFIT DENNIS AVENUE

PHASE 1 & 2 REVISED

PLAN SHEET 5

SCALE : AS SHOWN

Project No. : 2008037.00 Task 112 SHEET 5 of 10

FILE: N:\2008\2008037\2008037.00\2008037.00 Tsk 120 Dennis Avenue Phase 5 & 6\DGN\pHD-0004_DENNIS_AVEph5.dgn
DATE: Tuesday, February 26, 2013 AT 11:49 AM
...\DGN\pHD-0004_DENNIS_AVEph5.dgn 2/26/2013 11:49:41 AM

LANDSCAPING:

GRASSES SHALL BE PLANTED AS SHOWN ON THE PLANS

SWITCHGRASS (PANICUM VIRGATUM)
DEER TONGUE (DICHANTHELIUM CLANDESTIUM)
VIRGINIA WILD RYE (ELYMUS VIRGINICUS)

SELECTED SLOPE AREAS:

BLUESTEM (ADROPOGON VIRGINICUS)

GRASSES PLANTED IN GROUPS

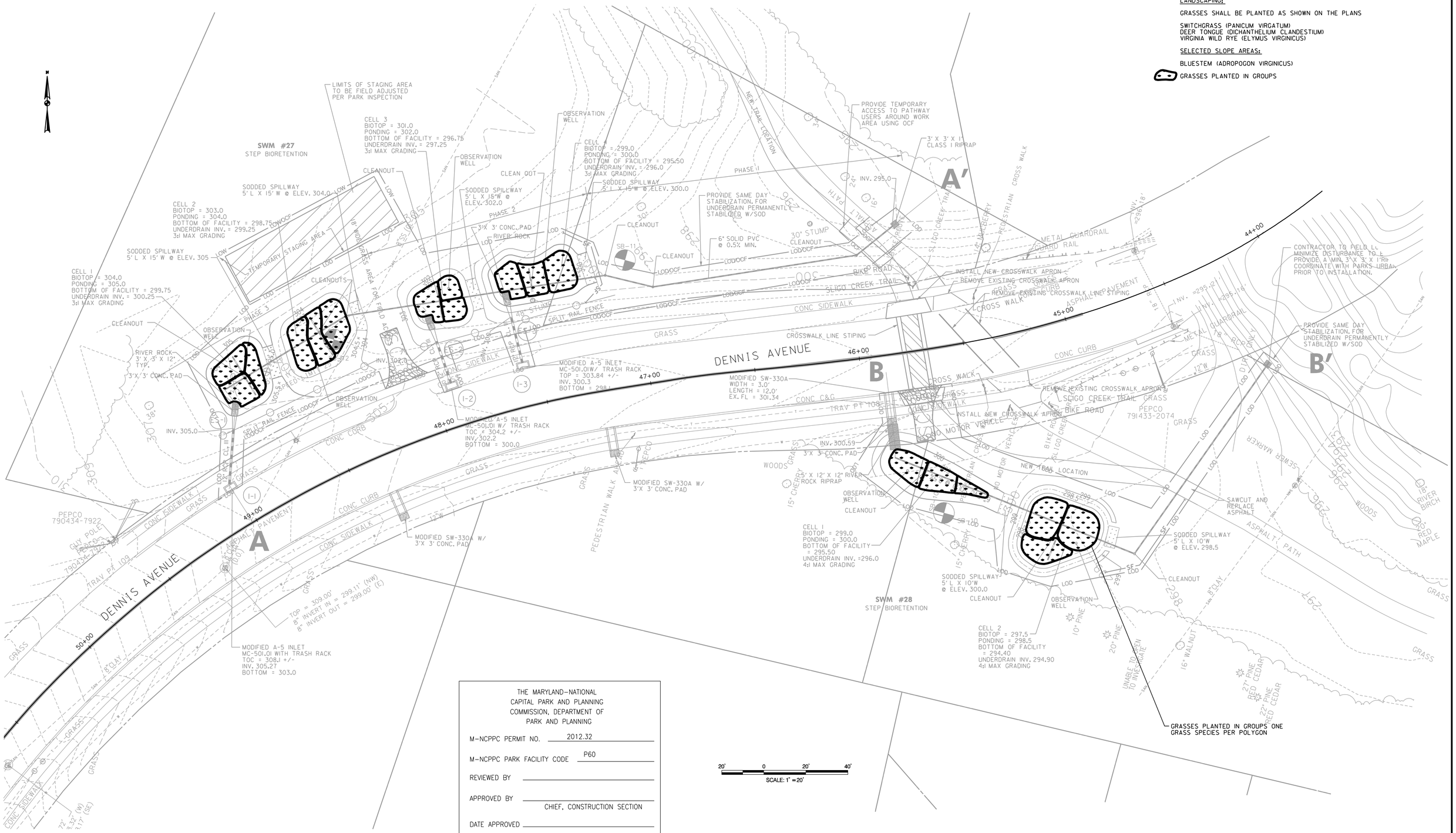

THE MARYLAND-NATIONAL CAPITAL PARK AND PLANNING COMMISSION, DEPARTMENT OF PARK AND PLANNING

M-NCPPC PERMIT NO. 2012.32

M-NCPPC PARK FACILITY CODE P60

REVIEWED BY _____

APPROVED BY _____
CHIEF, CONSTRUCTION SECTION

DATE APPROVED _____

M-NCPPC PERMIT SHEET # _____ OF _____

THIS IS NOT A PERMIT TO BEGIN CONSTRUCTION

This approval is for technical review only. For permit For permit information, contact Jay Childs, Construction Supervisor at (301)495-2574.

Gannett Fleming

GPI GREENMAN-PEDERSEN, INC.

MONTGOMERY COUNTY DEPARTMENT OF TRANSPORTATION ROCKVILLE, MARYLAND	MONTGOMERY COUNTY DEPARTMENT OF TRANSPORTATION GAITHERSBURG, MARYLAND	ROW LID RETROFIT DENNIS AVENUE
Accepted	Reviewed	PHASE 1 & 2 REVISED
Chief, Maintenance Division — Date	Chief, Transportation Planning and Design Section — Date	LANDSCAPE PLAN
		SCALE : AS SHOWN

Designed by: ZK Drawn by: ZK/KK Checked by: WRP

Project No. : 2008037.00 Task 112 SHEET 6 of 10

FILE: N:\2008\2008037\2008037.00\2008037.00 Tsk 120 Dennis Avenue Phase 5 & 6\DGN\pLD-0004_DENNIS_AVEph5.dgn
DATE: Monday, February 25, 2013 AT 03:45 PM
...\DGN\pLD-0004_DENNIS_AVEph5.dgn 2/25/2013 3:45:23 PM

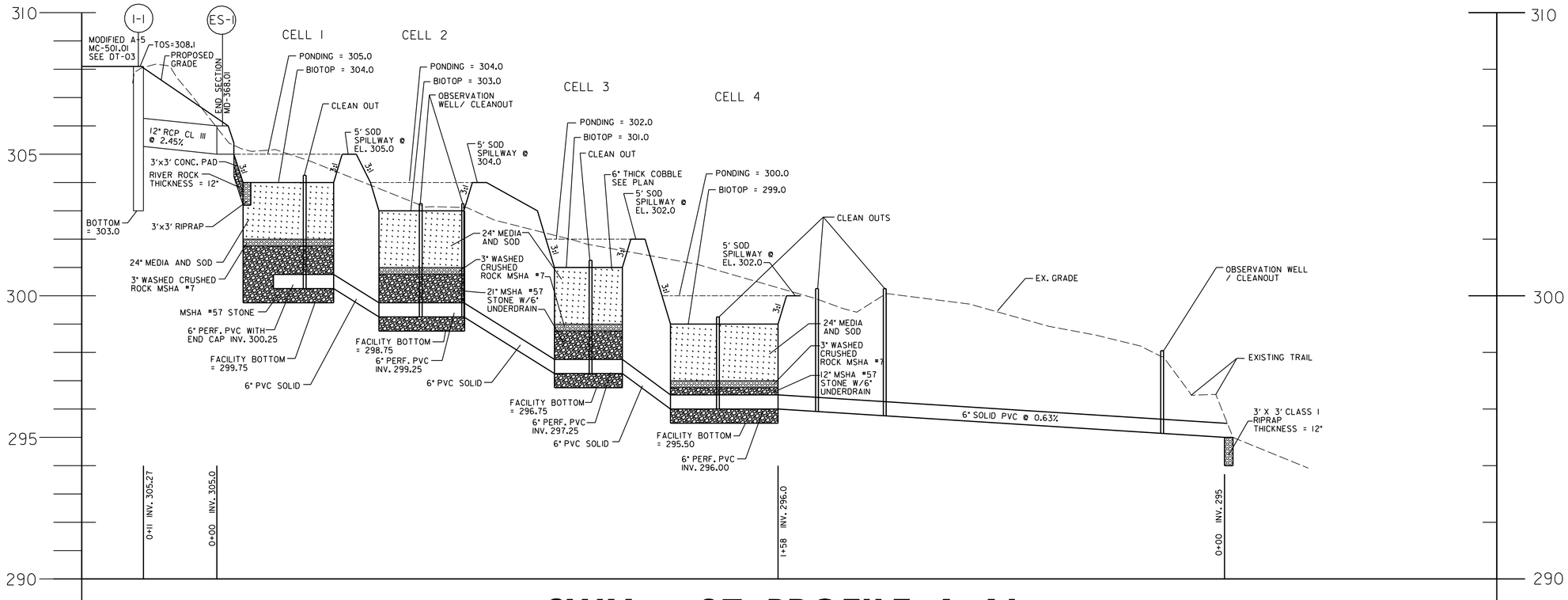

SWM #27 PROFILE A–A'

1" =20' HORIZONTAL
1" =2' VERTICAL

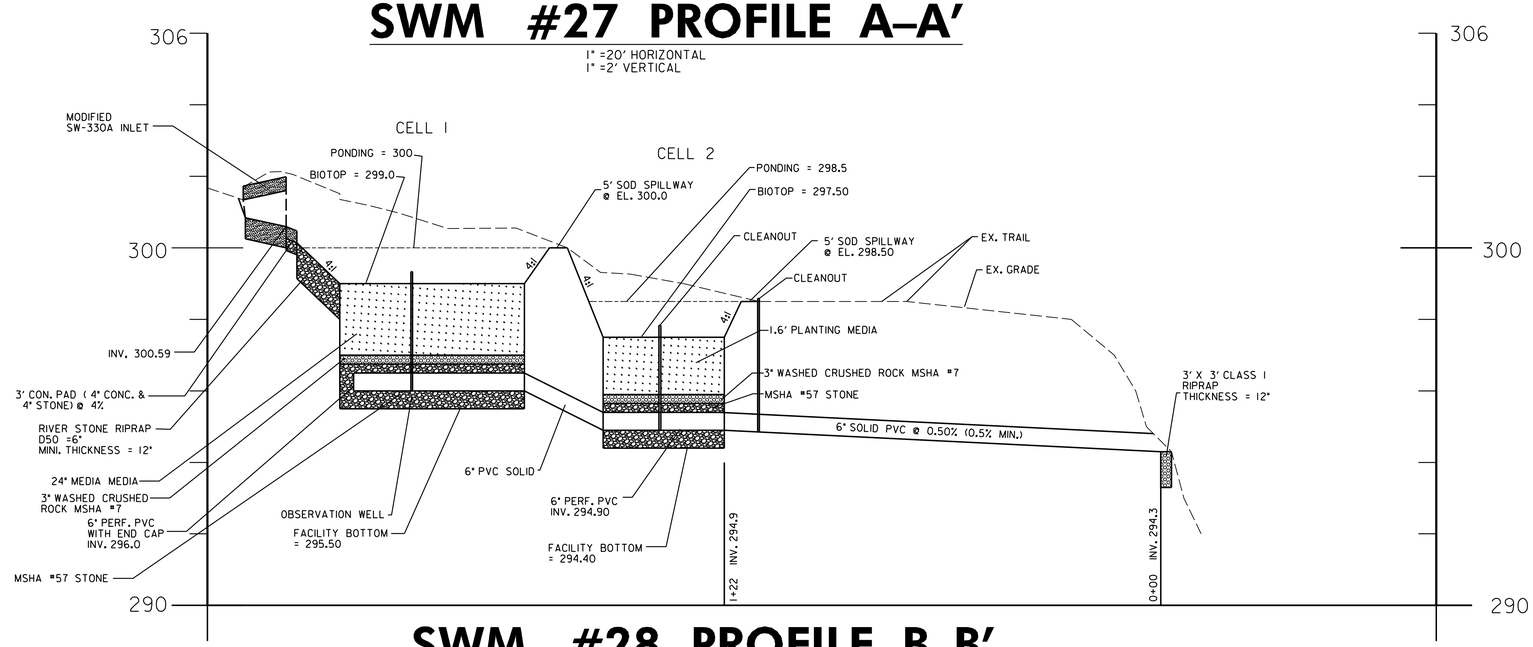

SWM #28 PROFILE B–B'

1" =20' HORIZONTAL
1" =2' VERTICAL

NOTE: 1. OBSERVATION WELLS SHALL HAVE METAL PLATES INSTALLED AT THE BOTTOM;
2. THE OBSERVATION WELL AND CLEANOUT SCREW CAPS FOR SWM #27 AND #28 SHALL BE THE PANELLA BRASS CAPS.

THE MARYLAND–NATIONAL CAPITAL PARK AND PLANNING COMMISSION, DEPARTMENT OF PARK AND PLANNING

M–NCPPC PERMIT NO. 2012.32

M–NCPPC PARK FACILITY CODE P60

REVIEWED BY

APPROVED BY
CHIEF, CONSTRUCTION SECTION

DATE APPROVED

M–NCPPC PERMIT SHEET # ____ OF ____

THIS IS NOT A PERMIT TO BEGIN CONSTRUCTION

This approval is for technical review only. For permit For permit information, contact Jay Childs, Construction Supervisor at (301)495–2574.

Gannett Fleming
GPI Greenman-Pedersen, Inc.

MONTGOMERY COUNTY
DEPARTMENT OF TRANSPORTATION
ROCKVILLE, MARYLAND

Accepted

Chief, Maintenance Division — Date

MONTGOMERY COUNTY
DEPARTMENT OF TRANSPORTATION
GAITHERSBURG, MARYLAND

Reviewed

Chief, Transportation Planning and Design Section — Date

Designed by: ZK Drawn by: ZK/KK Checked by: WRP

ROW LID RETROFIT DENNIS AVENUE

PHASE 1 & 2 REVISED

PROFILE

SCALE : AS SHOWN

Project No. : 2008037.00 Task 112 SHEET 7 of 10

FILE: N:\2008\2008037\2008037.00\2008037.00 Tsk 120 Dennis Avenue Phase 5 & 6\DGN\pHD-0005_profile.dgn
DATE: Monday, February 25, 2013 AT 03:46 PM
...\DGN\pHD-0005_profile.dgn 2/25/2013 3:46:15 PM

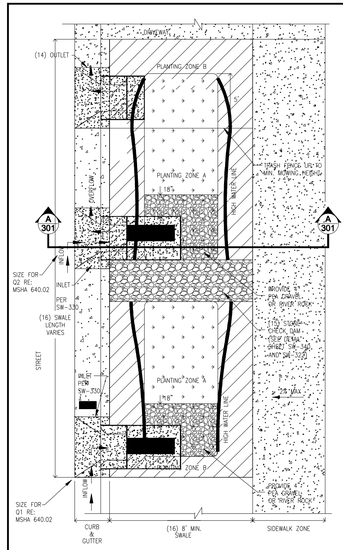

PLAN

FOR SECTIONS REFER TO SW-301

NOTES:

1. Width of swale: eight (8) feet (min.) from inside face of curbs. Depth of swale: six (6) inches (min.) from inlet at gutter pan elevation to bottom of swale (see SW-301).
2. Longitudinal slope of swale should match road grade. Assume typical cross slope of the road to be 2-6% with a cross slope of the gutter pan to be 9.3%.
3. Special requirements may be necessary on steep slopes and for facilities designed NV.
4. Include beginning and ending station elevations for each facility. Provide the top and bottom elevation at each station called out for each facility. Include elevations of inlet and outlet.
5. Sidewalk elevation must be set above inlet and outlet elevations to allow overflow to drain to street rather than sidewalk.
6. See details SW-330, 331, and 332 for details.
7. Check dams required: See Sheet SW-340 for detail.
8. See MCDPS Biofiltraton Facility Specifications for Planting Media specifications.
9. Special requirements for water lines, meters, and fire hydrants: See sheet SW-302 and MSHA UD-3 for details.
10. Depending on conditions, utility lines may need to be sleeved.
11. Use standard MC-100.01 with gutter thickened to 12" for curb and gutter.
12. Install washed pea gravel or river rock to transition from splash pad to topsoil.
13. IMPORTANT: Utility conflicts and existing conditions can create major design variables. Locate existing utilities prior to beginning design.
14. Add concrete pad if swale bed is ≥ 2in below the gutter elevation.
15. See plan for location of check dams.
16. See plan for dimension of swale.

- DRAWING NOT TO SCALE -

RIGHT - OF - WAY SWM RETROFIT TYPICAL DETAILS — DRAFT 11-30-2009

Swale Plan
(With Check Dams)

NUMBER **SW-300**

REVISED May 30, 2012

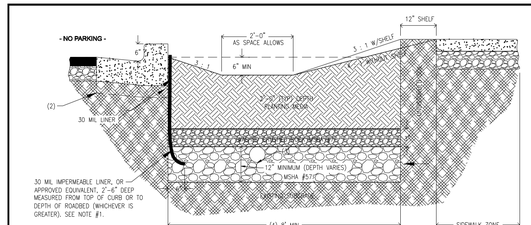

SECTION A-A
SWALE WITHOUT PARKING

NOTES:

1. Liner required when face of new curb is < 2ft from adjacent water line or on secondary collectors and higher street classifications. Liner may be required on local streets with transit routes, higher traffic volumes, or when facility is adjacent to travel lane, at the discretion of the Engineer.
2. Per DOT requirements, either leave existing curb in place or replace curb and gutter per MC-100.01 with 12" thick gutter pan.
3. Per plan, provide either 6" dia. Sch 40 PVC underdrain or a 6" deep gravel drain layer (MSHA #57).
4. See plan for dimensions.

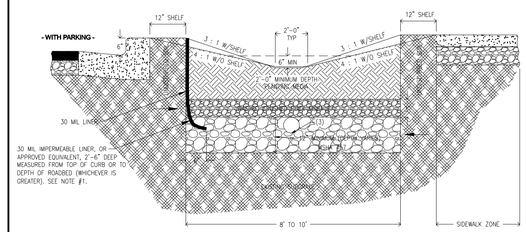

SECTION A-A
SWALE WITH PARKING

FOR PLAN VIEW REFER TO SW-300

- DRAWING NOT TO SCALE -

RIGHT - OF - WAY SWM RETROFIT TYPICAL DETAILS — DRAFT 11-30-2009

Swale Sections
With and without Parking

NUMBER **SW-301**

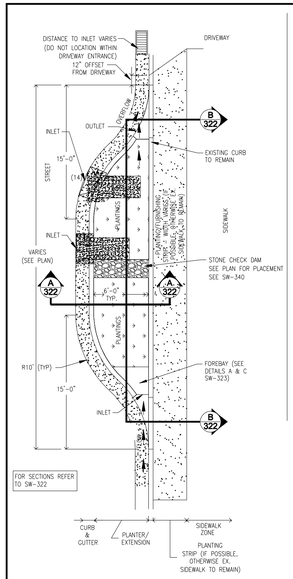

CURB EXTENSION PLAN

NOTES:

1. Width of curb extension to be six (6) feet typical from inside face of curbs. Depth of curb extension to be six (6) inches (min.) from inlet at gutter pan to bottom of facility.
2. Longitudinal slope of planter should match road grade with a preference toward 0% longitudinal (3% maximum). NM cross slope of soil within planter to be 0 %.
3. Check dams required to make up grade: See Sheet SW-340 for detail.
4. Special requirements may be necessary on steep slopes and for facilities designed to include discharge.
5. Include beginning and ending station elevations for each facility. Provide the top and bottom elevation at each station called out for each facility. Include elevations of inlets and outlets.
6. Sidewalk elevation must be set above inlet and outlet elevations to allow overflow to drain to street rather than sidewalk.
7. See Sheet SW-323 for inlet/outlet details.
8. See MCDPS Biofiltraton Facility Specifications for Planting Media specifications.
9. Special requirements for water lines, meters, and fire hydrants: See site plan, SW-302, SW-324 or MSHA-UD3 for details.
10. Depending on conditions, utility lines may need to be sleeved.
11. Use standard MC-100.01 with gutter thickened to 12".
12. Where feasible, width of facility may extend into existing planting strip (remove the existing curb in this case).
13. IMPORTANT: Utility conflicts and existing conditions can create major design variables. Locate existing utilities prior to beginning design.
14. If slope and length allow, add an inlet per SW-330 near downstream end with at least 2" drop available between gutter and swale elevations.

- DRAWING NOT TO SCALE -

RIGHT - OF - WAY SWM RETROFIT TYPICAL DETAILS — DRAFT 11-30-2009

Curb Extension
In-Street Plan

NUMBER **SW-320**

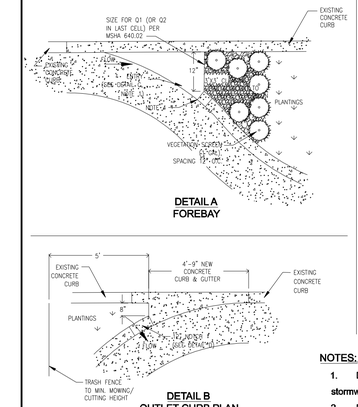

NOTES:

1. Detail A: Concrete cleaning pad for use with all stormwater curb extensions.
2. Detail C: To prevent ponding, position inlet closer to existing curb if the street cross-slope is >2%. Additional inlets can be added if necessary (preferably immediately downstream of each check dam to minimize potential backflow). Additional inlets are not recommended for streets sloped <1%.
3. Details B, C & D: For use on tertiary streets only.
4. Inlet may be modified to maximize flow entry to stormwater facility.

- DRAWING NOT TO SCALE -

RIGHT - OF - WAY SWM RETROFIT TYPICAL DETAILS — DRAFT 11-30-2009

Curb Extension
Inlet / Outlet Details

NUMBER **SW-323**

REVISED May 30, 2012

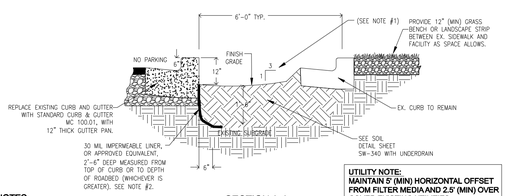

UTILITY NOTE:
MAINTAIN 5' (MIN) HORIZONTAL OFFSET FROM FILTER MEDIA AND 2.5' (MIN) OVER COVER EXISTING UTILITIES.

NOTES:

1. If stormwater curb extension is constructed next to an existing sidewalk, soil elevation must be brought to top of curb and slope away from curb at a 1 foot bench and 3:1 slope as per SW-301.
2. Liner required when face of new curb is less than 2 feet from adjacent water line or on neighborhood collectors and higher street classifications. Liner may be required on local streets with transit routes, higher traffic volumes, or when facility is adjacent to travel lane, at the discretion of the Engineer.

SECTION A-A
CURB EXTENSION SECTION

3. Internal Storage Excavation Note - Excavate internal storage (IS) to 2-inches below bottom IS grade shown on plans. Scarify the ground by horizontally dragging the bucket teeth across the bottom, add 3-inches of mulch and mix the mulch and loose soil over the IS bottom either by rototilling or raking with the excavator bucket (using horizontal motions only). Unless specifically called for on the plans, never place filter fabric on the ground beneath the IS.

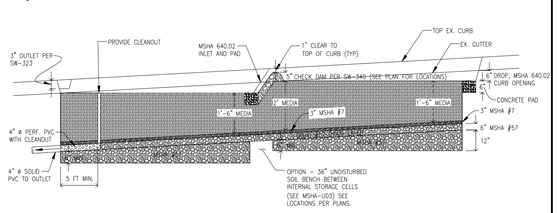

SECTION B-B
TYPICAL PROFILE (WITH CHECK DAMS)

- DRAWING NOT TO SCALE -

RIGHT - OF - WAY SWM RETROFIT TYPICAL DETAILS — DRAFT 11-30-2009

Curb Extension Section and Profile
(With Check Dams)

NUMBER **SW-322**

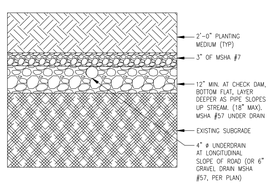

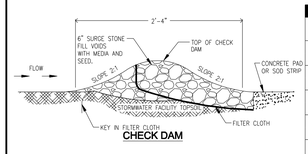

CHECK DAM

Facility Length	Longitudinal Street Slope	# of Check Dams *	Additional Inlets **
30	<=1%	0	None
	>1%	1	None
31 - 50	<=1%	1	None
	>1%	2	1
51 - 70	<=1%	2	1
	>1%	3	2
71-90	<=1%	3	2
	>1%	4	3
91 +	<=1%	4	3
	>1%	5	4

TABLE 1

CHECK DAM NOTES:

1. Check Dams to be evenly spaced to accommodate 0.5ft deep ponding in each cell along the swale.
2. Additional inlets to be placed directly downstream of check dams. All inlets must have 3ft x 3ft concrete cleaning pad. Make adjustments in downstream cell to accommodate Q2 and Trash collection
3. Top of Check Dam to be 1" below gutter elevation at inlet (at curb line) but not greater than 2" below top of curb.

- DRAWING NOT TO SCALE -

RIGHT - OF - WAY SWM RETROFIT TYPICAL DETAILS — DRAFT 11-30-2009

Growing Medium Profile and Check Dam

NUMBER **SW-340**

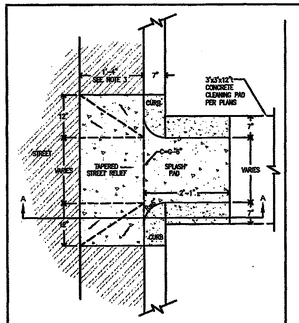

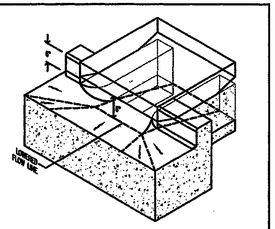

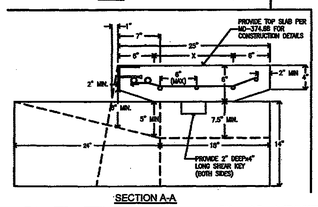

SECTION A-A

NOTES:

1. Concrete splash pad necessary where water enters and/or exits facility.
2. For stormwater facilities, install washed pea gravel or river rock to transition from splash pad to topsoil.
3. Reference standard MC-100.01.

* Typically will use MSHA 640.02 sized for Q1 (upstream Cells) and Q2 (last cell with trash fence)

DIMENSION 'X'	
SITE COORDINATION	X (in.)
FACILITY ON CURB, NO PARKING	6"
GRADED FACILITY ON CURB, PARKING	13"
PLANTER FACILITY ON CURB, PARKING	18"

RIGHT - OF - WAY SWM RETROFIT TYPICAL DETAILS

Concrete Inlet, Type SW with Top Slab
For Tertiary Roads

SW-330A

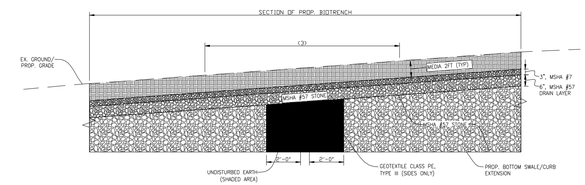

TYPICAL UTILITY CROSSING TREATMENT

NOTES:

1. PRIOR TO BEGINNING CONSTRUCTION, THE CONTRACTOR SHALL FIELD LOCATE ALL EXISTING UTILITIES AND SHALL HAND DIG AROUND UTILITIES LOCATED IN THE VICINITY OF THE PROPOSED EXCAVATION. CONTACT MISS UTILITY 48 HOURS PRIOR TO DIGGING TO HAVE UTILITIES LOCATED.
2. WHEN THE CONTRACTOR ENCOUNTERS AN EXISTING UTILITY WITH LESS THAN 12" OF VERTICAL CLEARANCE BETWEEN THE TOP OF UTILITY AND THE BOTTOM OF BIOTRENCH, THE TYPICAL UTILITY CROSSING TREATMENT SHALL BE FOLLOWED.
3. WHEN THE VERTICAL CLEARANCE BETWEEN THE TOP OF UTILITY AND THE BOTTOM OF THE NO.57 DRAIN LAYER (SHOWN AS DIMENSION A) IS LESS THAN 12", ADJUST MEDIA DEPTH AND CHANNEL SLOPE TO OBTAIN THE REQUIRED COVER DEPTH.
4. UNDISTURBED EARTH AREA SURROUNDING EXISTING UTILITY SHALL EXTEND ACROSS ENTIRE TRENCH WIDTH.

MONTGOMERY COUNTY DEPARTMENT OF ENVIRONMENTAL PROTECTION ROCKVILLE, MARYLAND	MONTGOMERY COUNTY DEPARTMENT OF TRANSPORTATION GAITHERSBURG, MARYLAND	ROW LID RETROFIT DENNIS AVENUE PHASE 1 & 2 REVISED
Accepted	Reviewed	MAP JN 32, PARCEL N060, N047 & N048
Chief, Maintenance Division — Date	Chief, Transportation Planning and Design Section — Date	DETAIL SHEET DT01
		SCALE : AS SHOWN

Designed by: Z.K. Drawn by: Z.K. Checked by: W.R.P. Project No. : 2008037.00 TASK 120 SHEET 8 of 10

...\DGN\pDT-00Dennis5.dwg 2/25/2013 3:48:18 PM

Rainstore3 Unit Dimensions

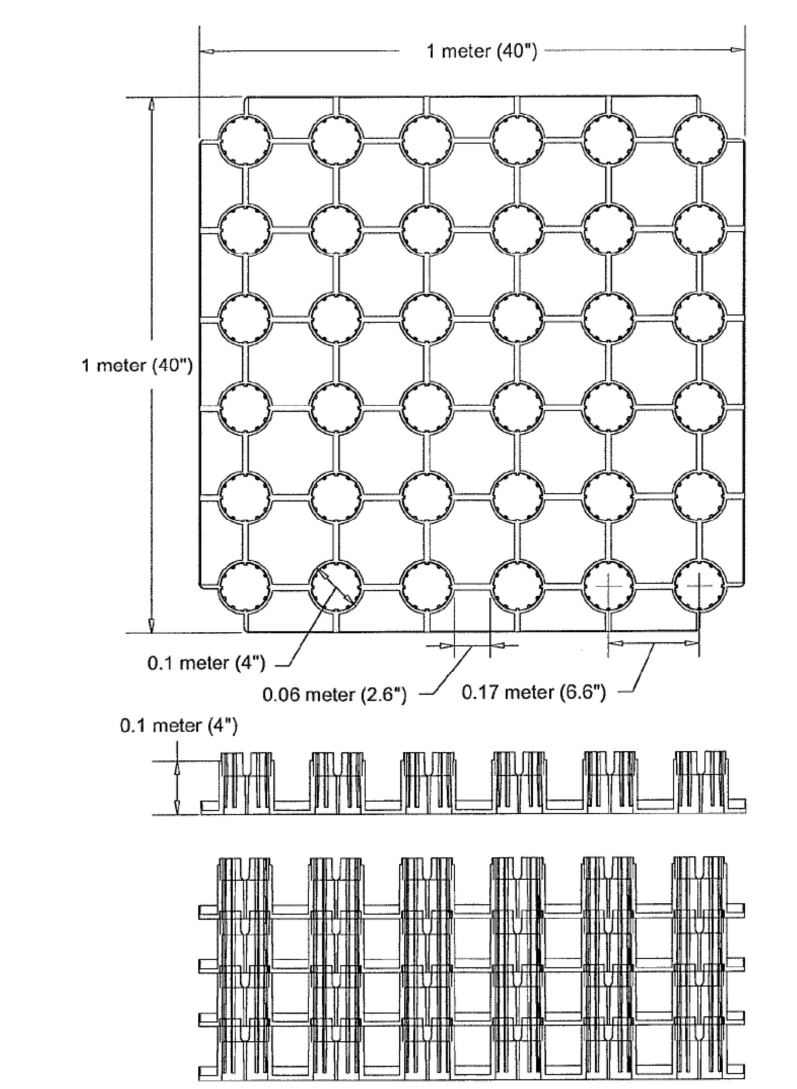

Rainstore3 Unit Detail

Single Rainstore3 injection molded unit geometry and dimensions

NOT TO SCALE

Invisible Structures, Inc.
RS3detail.dwg

1600 Jackson St. Suite 310
Golden, Colorado 80401

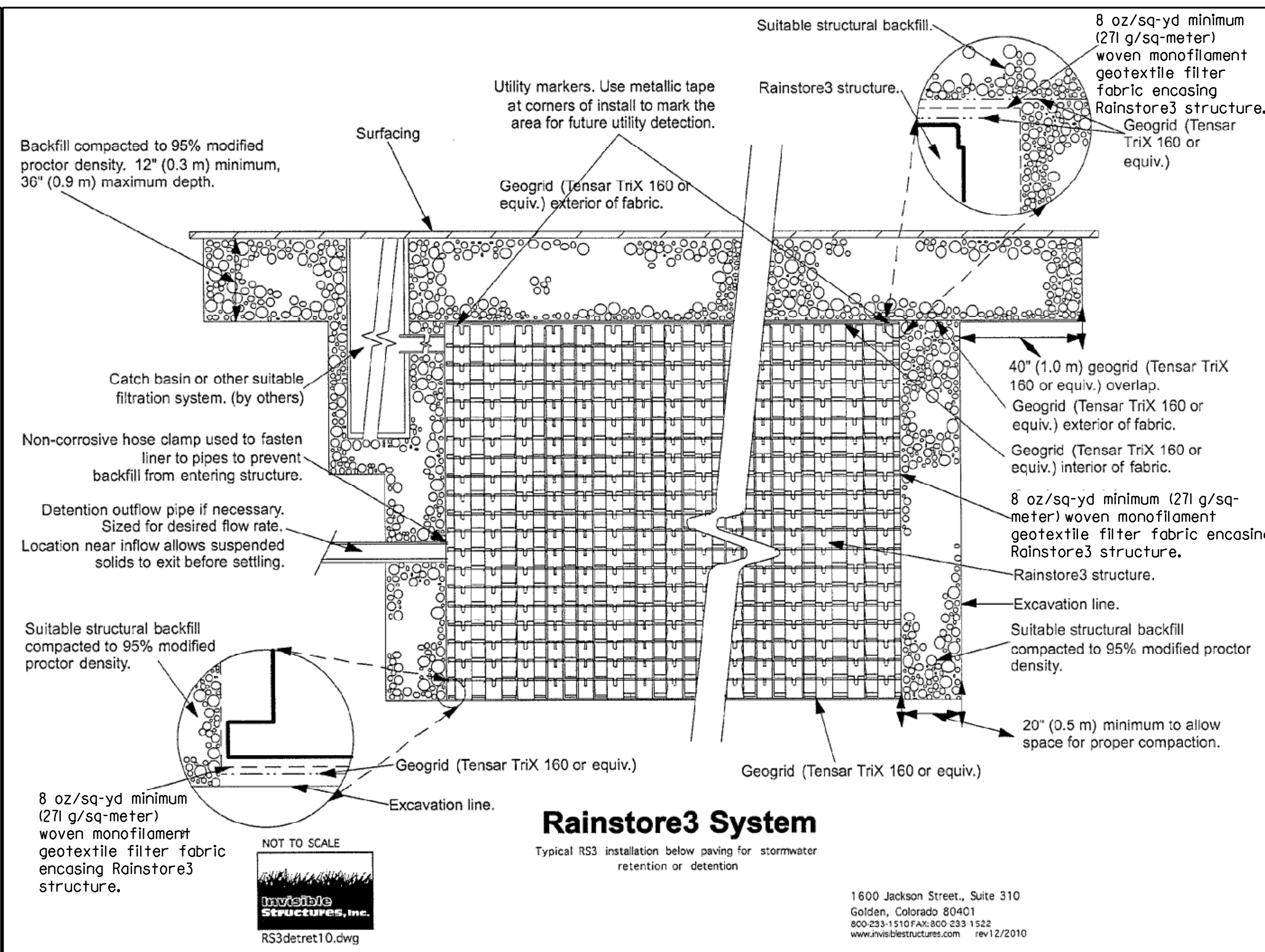

Rainstore3 System

Typical RS3 installation below paving for stormwater retention or detention

NOT TO SCALE

RS3detret10.dwg

1600 Jackson Street, Suite 310
Golden, Colorado 80401

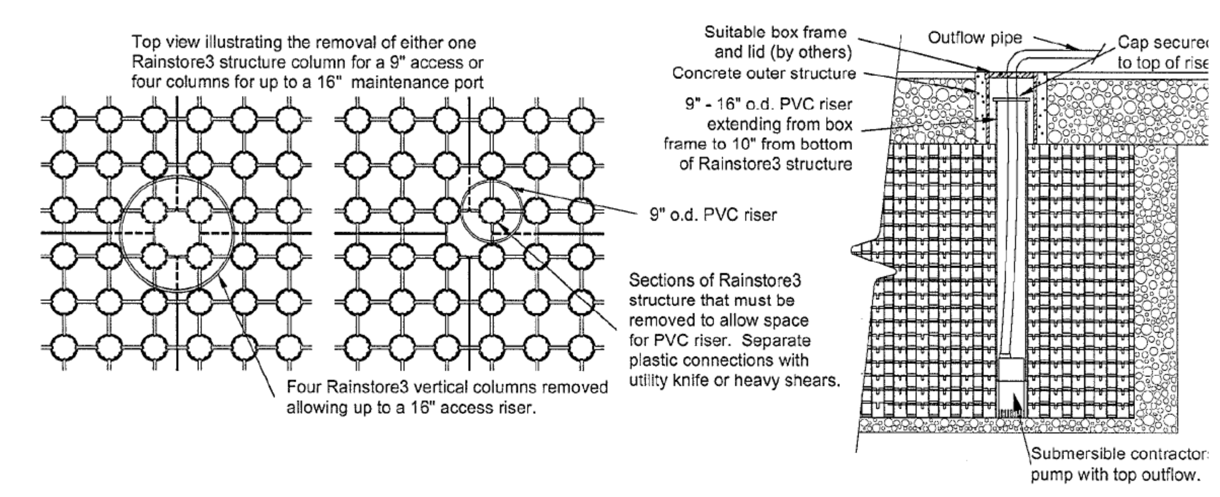

RS3 Maintenance Port

Method for providing inspection and cleanout access

NOT TO SCALE

Invisible Structures, Inc.
RS3maintenport.dwg

1600 Jackson Street, Suite 310
Golden, Colorado 80401

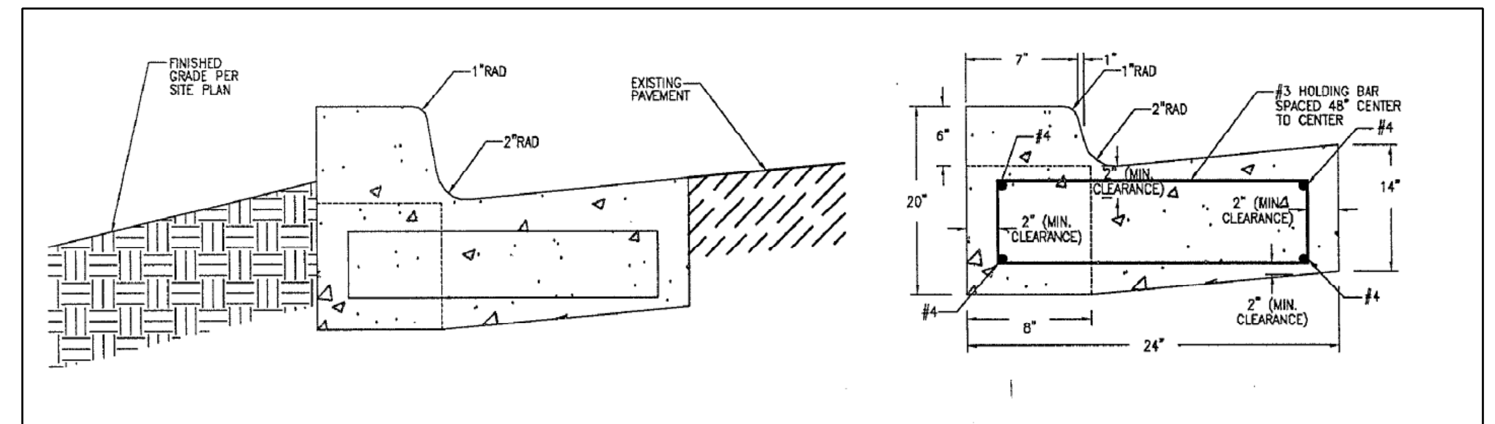

NOT TO SCALE

GENERAL NOTES

1. REFER TO MONTGOMERY COUNTY DEPARTMENT OF TRANSPORTATION SPECIFICATIONS FOR MATERIALS, METHODS OF CONSTRUCTION AND EXPANSION JOINT LOCATIONS.
2. THIS STANDARD SHALL BE USED ON PRIMARY RESIDENTIAL, ARTERIAL AND BUSINESS DISTRICT ROADS AS WELL AS CURB RETURNS AND INLET THROATS.
3. WHENEVER STANDARD MC-101.01 CURB IS USED IN CONJUNCTION WITH THIS STANDARD, A TEN FOOT TRANSITION SHALL BE PROVIDED FROM THE STANDARD MC-100.01 TO STANDARD MC-101.01 FOR CURB RETURNS AND CURB SECTIONS WHICH INCLUDES INLETS.
4. THE STANDARD DISTANCE BETWEEN JOINTS SHALL BE TEN FEET (MAXIMUM AND MINIMUM DISTANCES SHALL BE THIRTEEN FEET AND FIVE FEET RESPECTIVELY).
5. EXPANSION JOINT MATERIAL SHALL BE 1/2 INCH PREFORMED CORK, TRIMMED AND SEALED WITH NON-STAINING TWO-COMPONENT POLYSULFIDE OR POLYURETHANE ELASTOMERIC TYPE SEALANT COMPLYING WITH FS TT-S-00227.
6. MEET EXISTING CURB AND GUTTER IN-LINE AND ON-GRADE.

REINFORCED CONCRETE CURB DETAIL

NTS

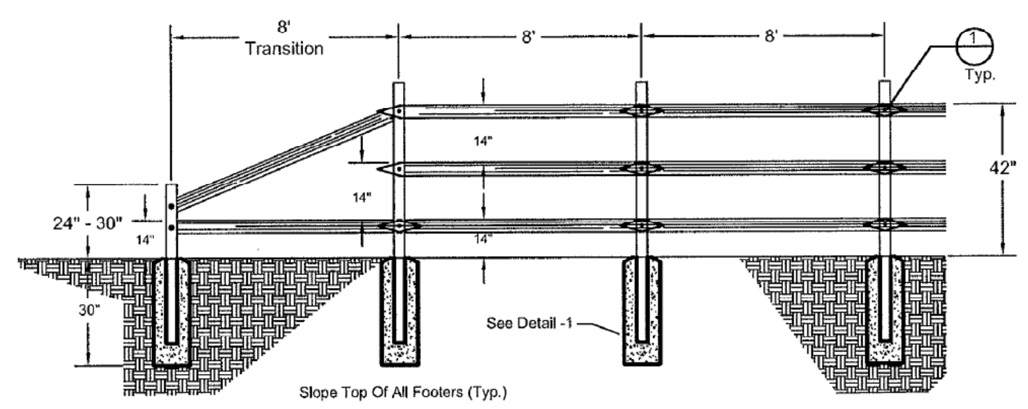

Front Elevation - Typical Fence Transition

Scale: None

Note: 1) All Fencing To Be Installed On Down-Hill Side Of Trail.

2) Field Adjust All Fence Transitions And Offsets As Necessary And As Directed.

3) Contractor Shall Supply Shop Drawing Of Proposed Fence Transition For Review And Approval.

4) See Plan for location

SPLIT RAIL FENCE DETAIL

NTS

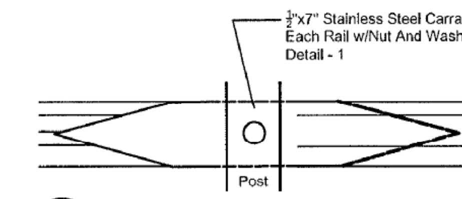

1 Typical Rail Anchor @ Post

Note: 1) Rails Shall Fit Snug Prior To Pre-Drilling (Typ.)

2) Pre-Drill Bolt Holes At Each Anchoring Location.

3) All Attachment Nuts To Be Placed On Lake Side Of Fence And Apply Washers On Both Sides.

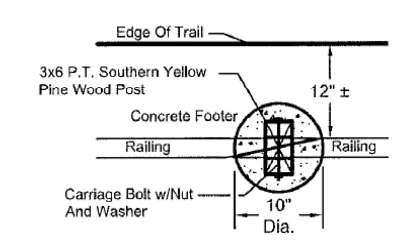

Detail - 1

Scale: None

Note: 10" Dia. x 30" Deep, Conc. Ftg. MSHA Mix #3 (Bid Alternate - Dry Pack Footer In Lieu Of MSHA Mix #3 Footer)

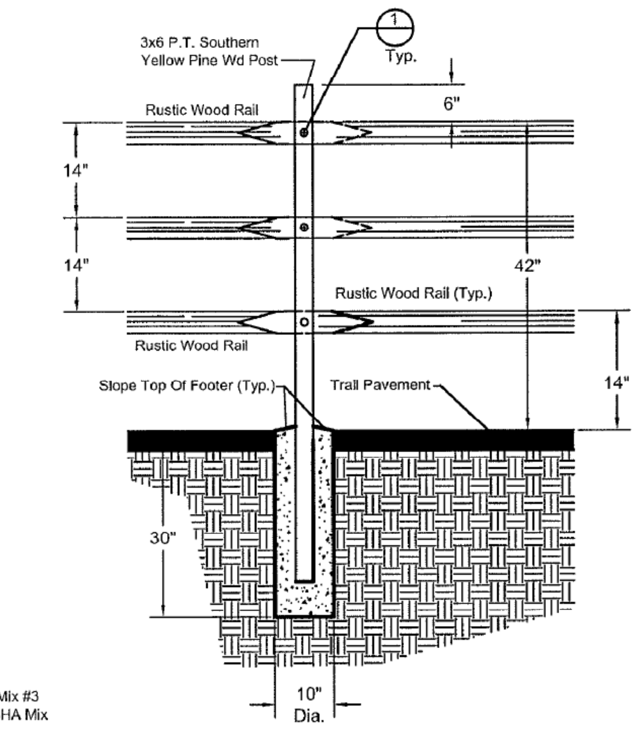

2 Typical Section At Post

Scale: None

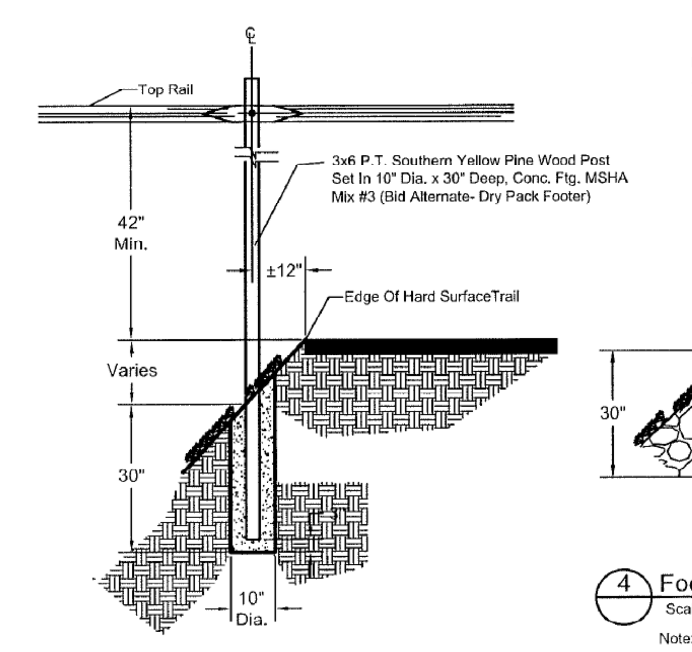

3 Typical Footing Detail On Slope

Scale: None

Note: 1) Contractor Shall Jack-Hammer 10" Dia. Hole In Rock, As Necessary For Post Installation.

2) Contractor Shall Remove All Debris From Site And Restore All Disturbed Areas Upon Completion Of Fence Installation.

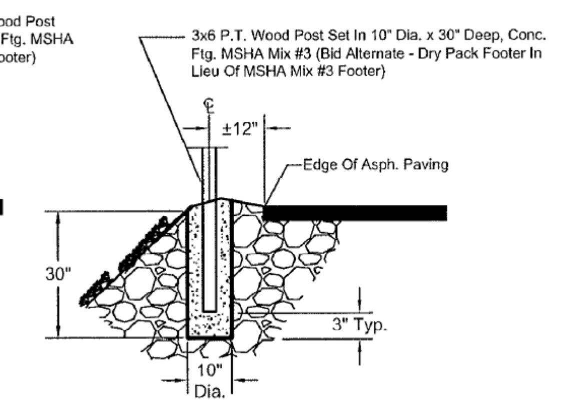

4 Footing Detail In Rock

Scale: None

Note:

1) Contractor Shall Jack-Hammer 10" Dia. Hole In Rock, As Necessary For Post Installation.

2) Contractor Shall Remove All Debris From Site And Restore All Disturbed Areas Upon Completion Of Fence Installation.

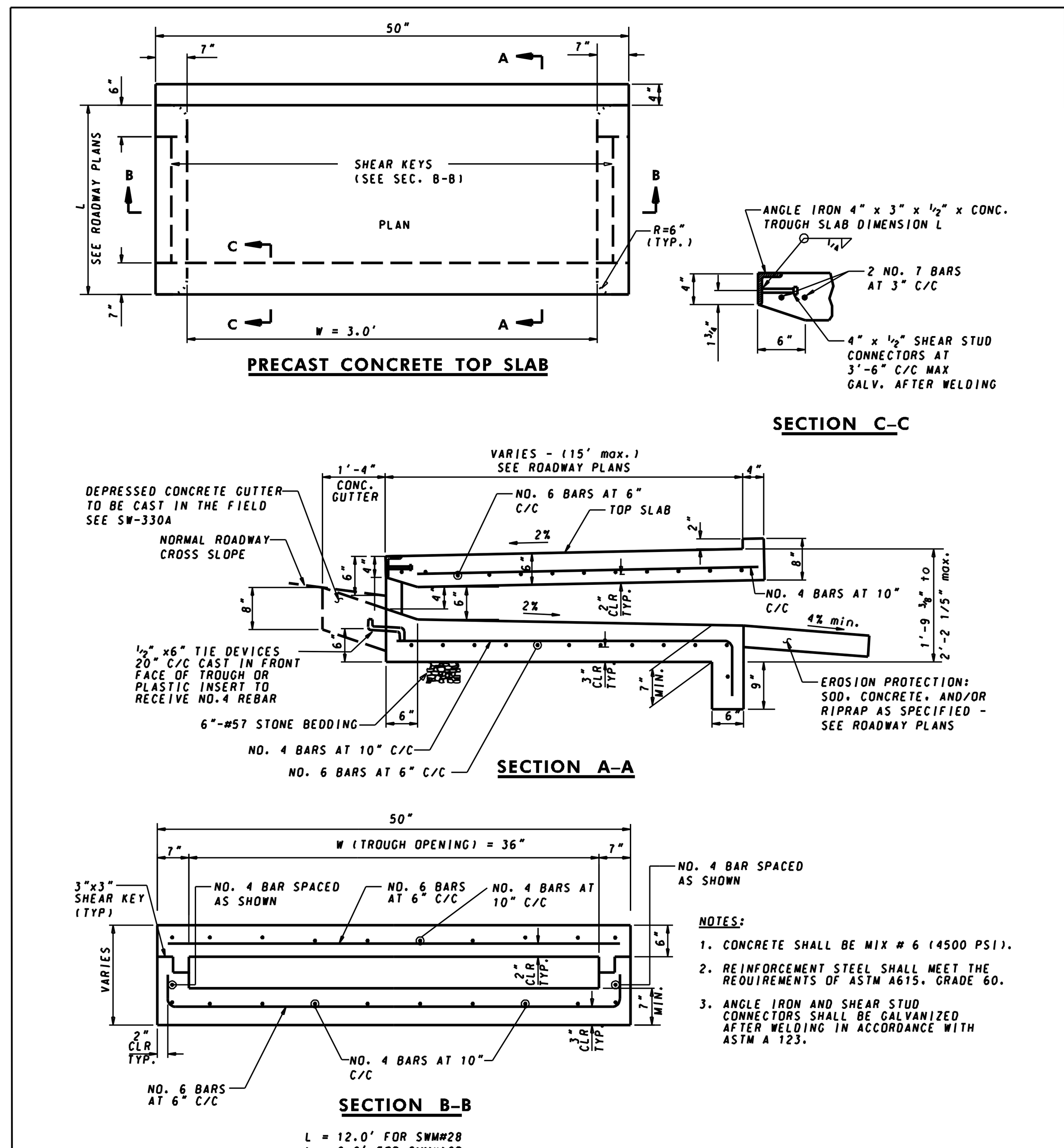

PRECAST CONCRETE TOP SLAB — SECTION C-C — SECTION A-A — SECTION B-B

L = 12.0' FOR SWM#28
L = 6.0' FOR SWM#16B

NOTES:
1. CONCRETE SHALL BE MIX # 6 (4500 PSI).
2. REINFORCEMENT STEEL SHALL MEET THE REQUIREMENTS OF ASTM A615, GRADE 60.
3. ANGLE IRON AND SHEAR STUD CONNECTORS SHALL BE GALVANIZED AFTER WELDING IN ACCORDANCE WITH ASTM A 123.

SPECIFICATION 305

Maryland Department of Transportation
STATE HIGHWAY ADMINISTRATION
STANDARDS FOR HIGHWAYS AND INCIDENTAL STRUCTURES

MODIFIED SW-330A INLET FOR SWM #28 & SWM # 16B

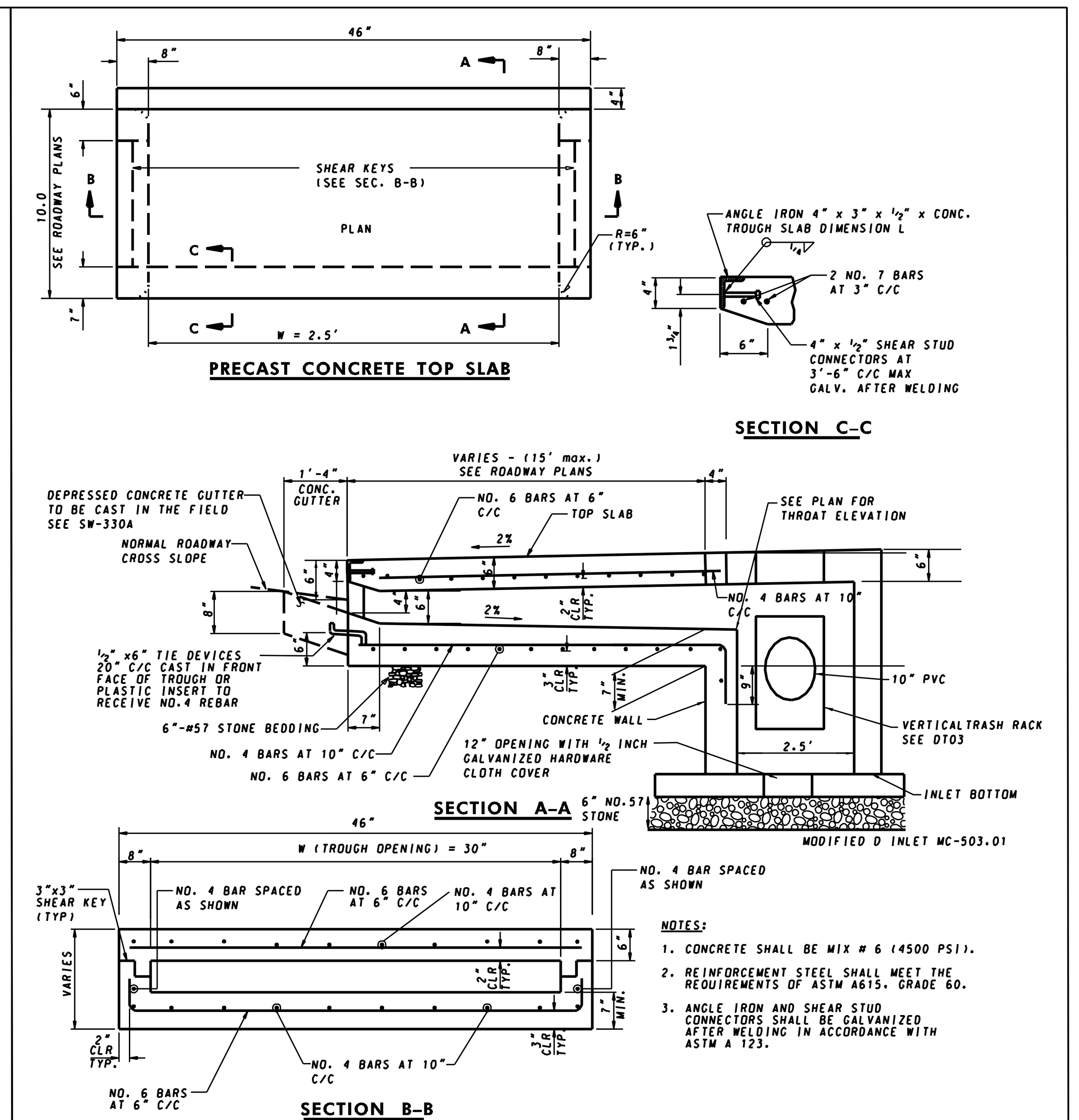

PRECAST CONCRETE TOP SLAB — SECTION C-C — SECTION A-A — SECTION B-B

NOTES:
1. CONCRETE SHALL BE MIX # 6 (4500 PSI).
2. REINFORCEMENT STEEL SHALL MEET THE REQUIREMENTS OF ASTM A615, GRADE 60.
3. ANGLE IRON AND SHEAR STUD CONNECTORS SHALL BE GALVANIZED AFTER WELDING IN ACCORDANCE WITH ASTM A 123.

SPECIFICATION 305

Maryland Department of Transportation
STATE HIGHWAY ADMINISTRATION
STANDARDS FOR HIGHWAYS AND INCIDENTAL STRUCTURES

MODIFIED SW-330A CONCRETE INLET FOR SWM #6

THE MARYLAND-NATIONAL CAPITAL PARK AND PLANNING COMMISSION, DEPARTMENT OF PARK AND PLANNING

M-NCPPC PERMIT NO. 2012.32

M-NCPPC PARK FACILITY CODE P60

REVIEWED BY

APPROVED BY
CHIEF, CONSTRUCTION SECTION

DATE APPROVED

M-NCPPC PERMIT SHEET # ____ OF ____

THIS IS NOT A PERMIT TO BEGIN CONSTRUCTION

This approval is for technical review only. For permit For permit information, contact Jay Childs, Construction Supervisor at (301)495-2574.

MONTGOMERY COUNTY DEPARTMENT OF TRANSPORTATION ROCKVILLE, MARYLAND

Accepted

Chief, Maintenance Division — Date

MONTGOMERY COUNTY DEPARTMENT OF TRANSPORTATION GAITHERSBURG, MARYLAND

Reviewed

Chief, Transportation Planning and Design Section — Date

Gannett Fleming

GPI Greenman-Pedersen, Inc.

ROW LID RETROFIT DENNIS AVENUE

PHASE 1 & 2 REVISED

DETAIL SHEET

SCALE : AS SHOWN — DT02

Designed by: ZK — Drawn by: ZK/KK — Checked by: WRP

Project No. : 2008037.00 Task 112 — SHEET 9 of 10

FILE: N:\2008\2008037\2008037.00\2008037.00 Tsk 120 Dennis Avenue Phase 5 & 6\DGN\pDT-0001_DENNIS_AVEph5.dgn
DATE: Monday, February 25, 2013 AT 04:41 PM

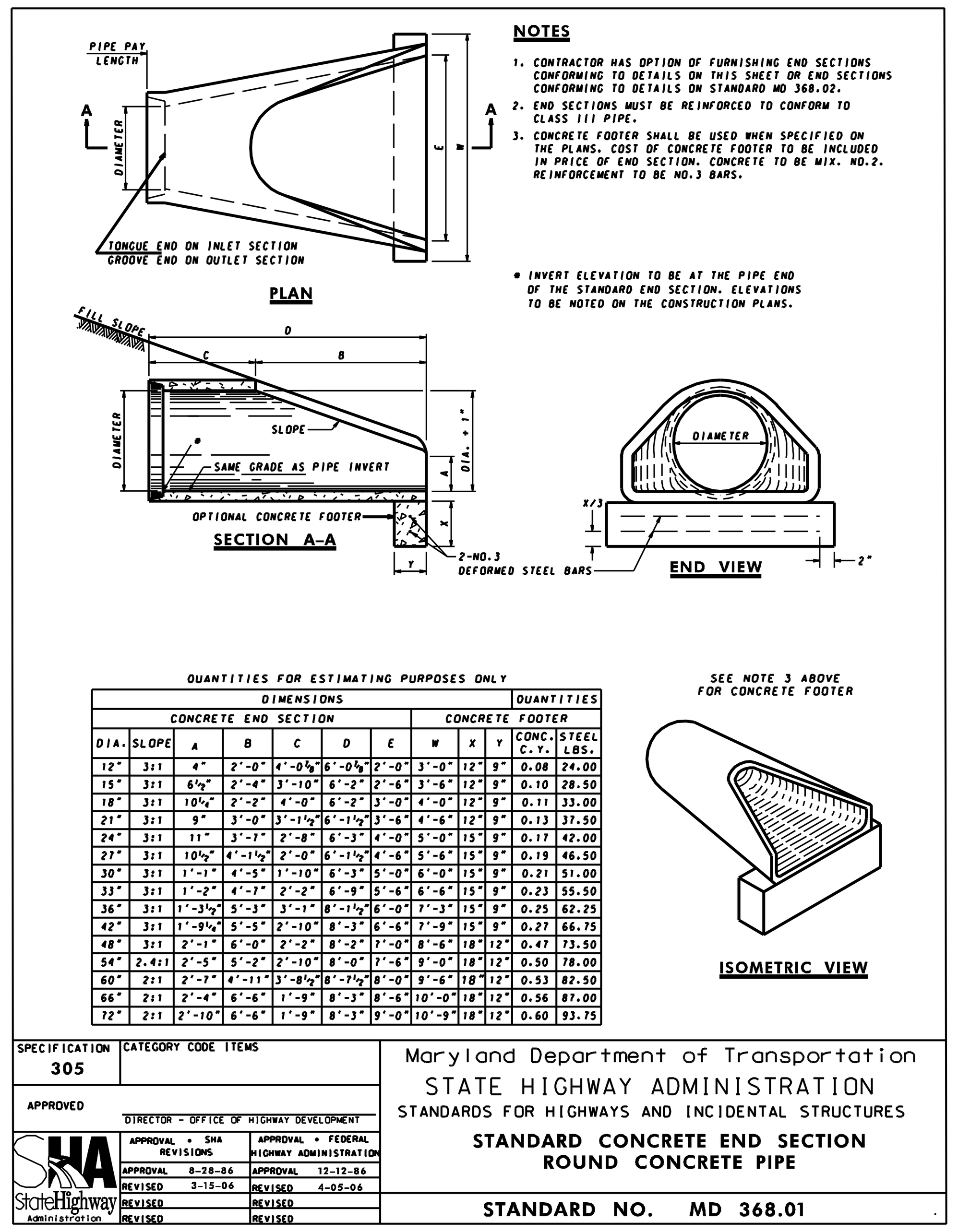

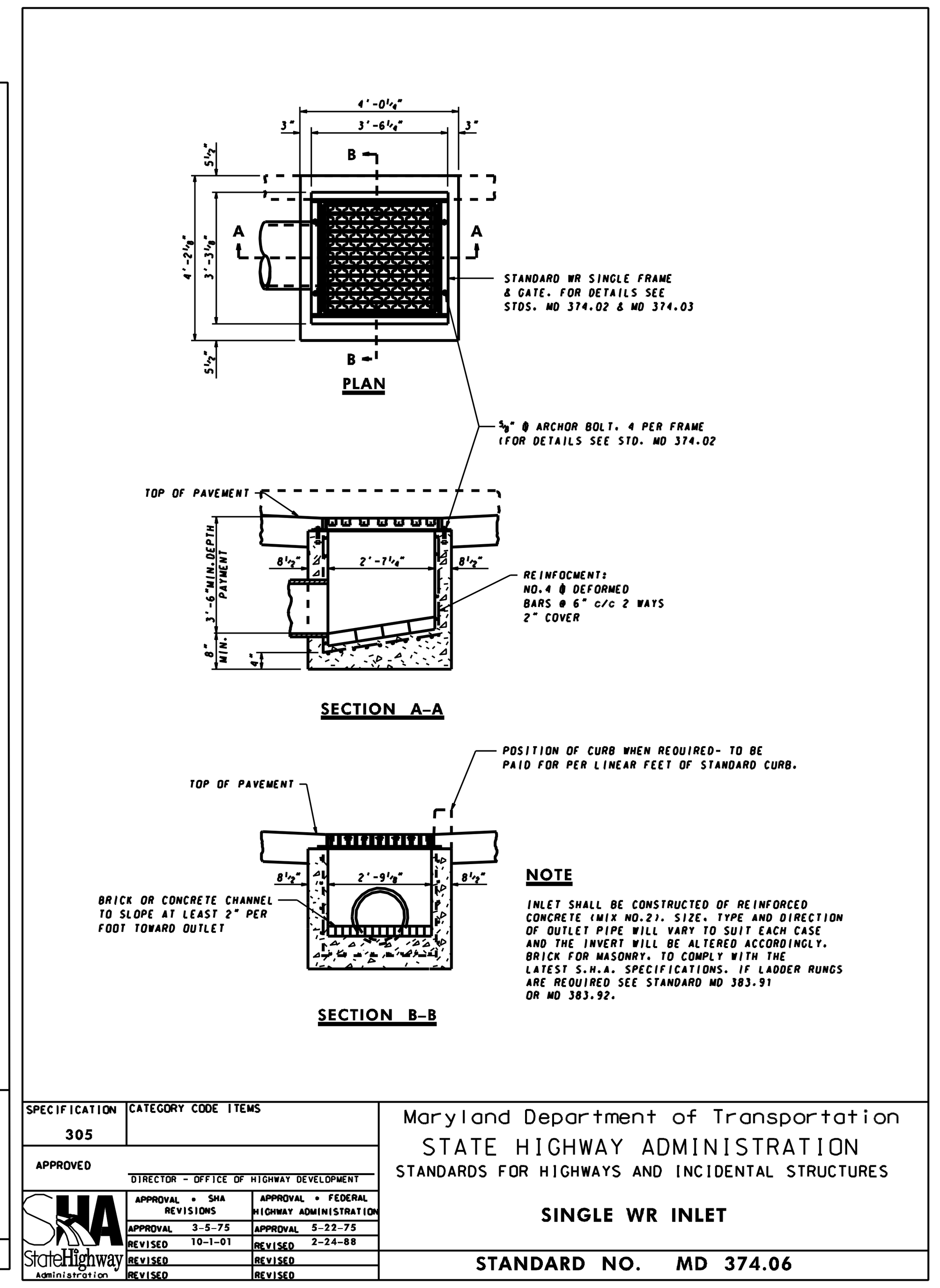

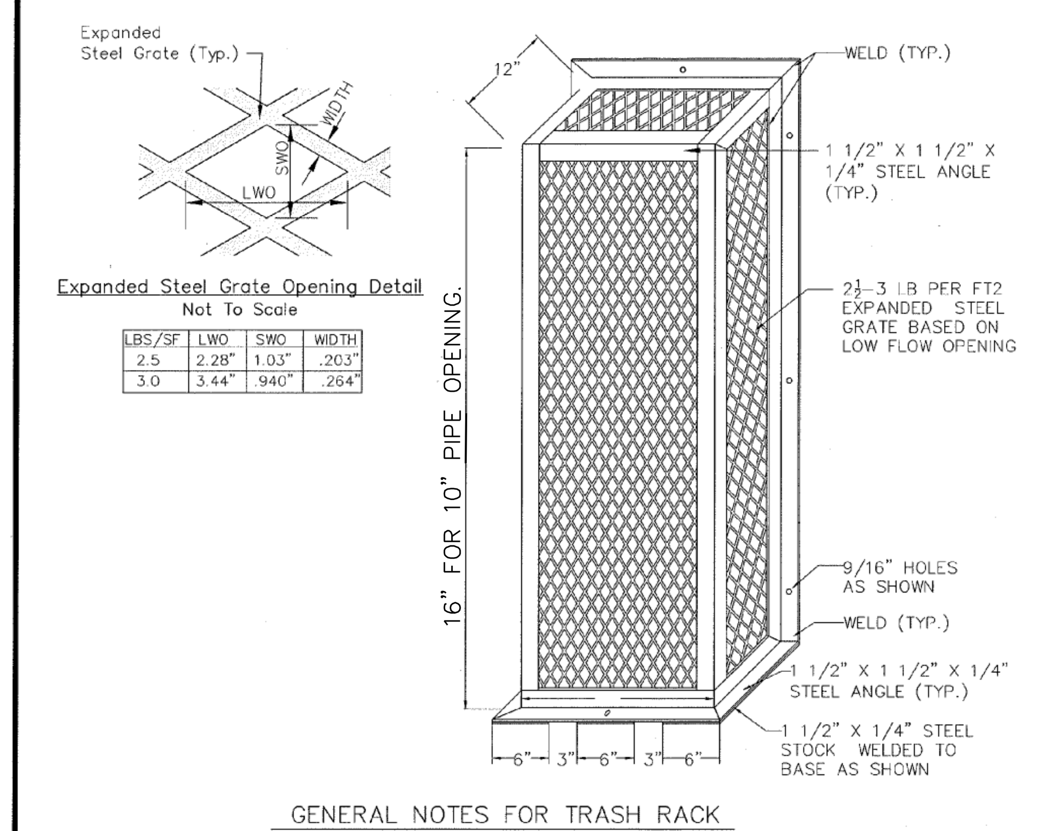

LBS/SF	LWD	SWD	WIDTH
2.5	2.28"	1.03"	.203"
3.0	3.44"	.940"	.264"

GENERAL NOTES FOR TRASH RACK

1. STEEL TO CONFORM TO ASTM A-36
2. ALL SURFACES OF TRASH RACK(S) MUST BE HOT DIPPED GALVANIZED AFTER FABRICATION
3. TRASH RACK(S) TO BE FASTENED TO WALL WITH 1/2" MASONRY ANCHORS. TRASH RACK(S) TO BE REMOVABLE.
4. TRASH RACK(S) TO BE CENTERED HORIZONTALLY OVER THE OPENING.
5. FABRICATOR MAY MODIFY COMPONENTS OF TRASH RACK FRAME TO IMPROVE CONSTRUCTABILITY OF TRASH RACK. MODIFICATIONS MUST BE APPROVED BY MCDPS PRIOR TO FABRICATION
6. WRAP & FASTEN 8 OZ/SQ-YD MINIMUM (271 G/SQ-METER) WOVEN MONOFILAMENT GEOTEXTILE FILTER FABRIC

MONTGOMERY COUNTY DEPARTMENT OF PERMITTING SERVICES WATER RESOURCES	VERTICAL REMOVABLE LOW FLOW ORIFICE TRASH RACK DETAIL	DATE: 02/04
		SCALE: NONE

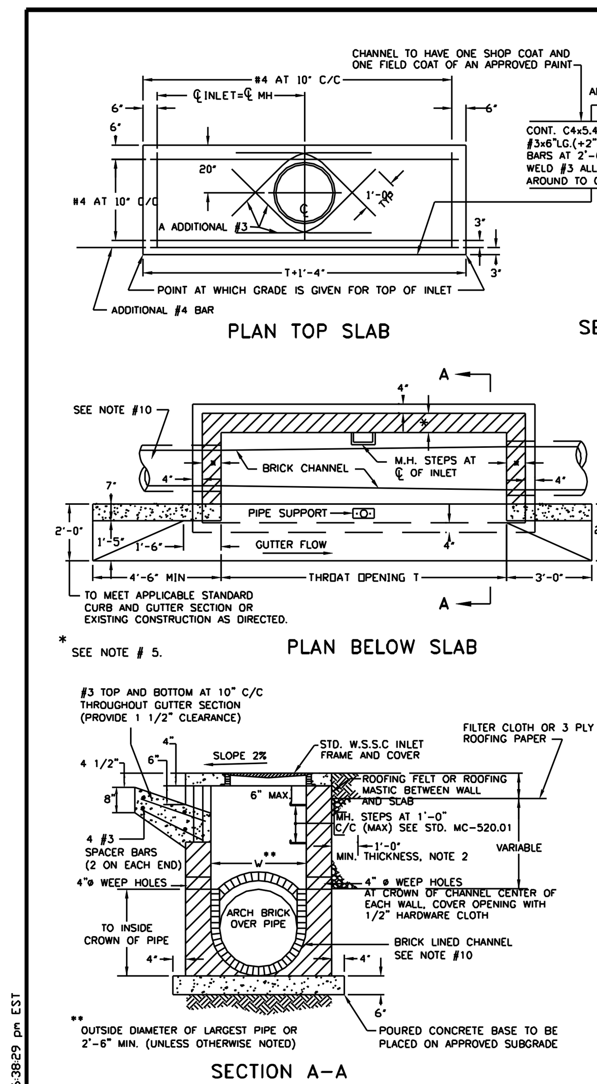

GENERAL NOTES

1. USE SOLID MASONRY (BRICK OR CONCRETE BLOCK) OR POURED CONCRETE FOR WALLS.
2. INSTALL FOUNDATION DRAINAGE MATERIAL AROUND STRUCTURE FROM BOTTOM OF WEEP HOLES TO WITHIN 8" OF SURFACE.
3. MORTAR SHALL CONFORM TO ASTM SPECIFICATION C 270 TYPE M.
4. REFER TO MARYLAND STATE HIGHWAY ADMINISTRATION FOR MATERIALS AND METHODS OF CONSTRUCTION.
5. WALL THICKNESS WILL BE THE FOLLOWING: 8" THICK WALLS FOR THE FIRST 8'-0" OF DEPTH, 12" THICK WALLS BETWEEN 8'-0" AND 12'-0" OF DEPTH, 16" THICK WALLS FOR DEPTH GREATER THAN 12'-0" DEPTH TO BE MEASURED FROM TOP OF CURB TO CROWN OF OUTGOING PIPE.
6. f'_c =3500 PSI AT 28 DAYS.
7. ALL REINFORCING STEEL TO BE ASTM A615, GR 60.
8. FOR PIPES 30" AND LARGER, PROVIDE STEPS IN CHANNELS OR STRUCTURES. SEE STANDARD MC-520.02
9. ON TERMINAL INLETS, THE INLET BOTTOM SHALL BE SLOPED TO OUTLET PIPE WITH SEWER BRICK OR CONCRETE, 9" MIN. FALL.
10. FOR ACTUAL PIPE LOCATIONS, REFER TO STORM DRAIN PLANS AND CONSTRUCT BRICK CHANNEL TO PIPE CONFIGURATIONS BRICK CHANNEL SHALL BE SEWER BRICK ON EDGE AND BUILT TO THE CROWN OF THE PIPE.

DESIGNATION	T THROAT OPENING	NUMBER OF PIPE SUPPORTS
A-5	5'-0"	0
A-10	10'-0"	1
A-15	15'-0"	2
A-20	20'-0"	3

PIPE SUPPORTS TO BE SPACED AT 5'-0" C/C

APPROVED ____ DATE	REVISED	MONTGOMERY COUNTY DEPARTMENT OF TRANSPORTATION
DIRECTOR, DEPT. OF TRANS.		"A" INLET
CHIEF, DIV. OF ENG. SERVICES		STANDARD NO. MC-501.01

P:\STD\MC50101 10-13-95 6:28:29 pm EST

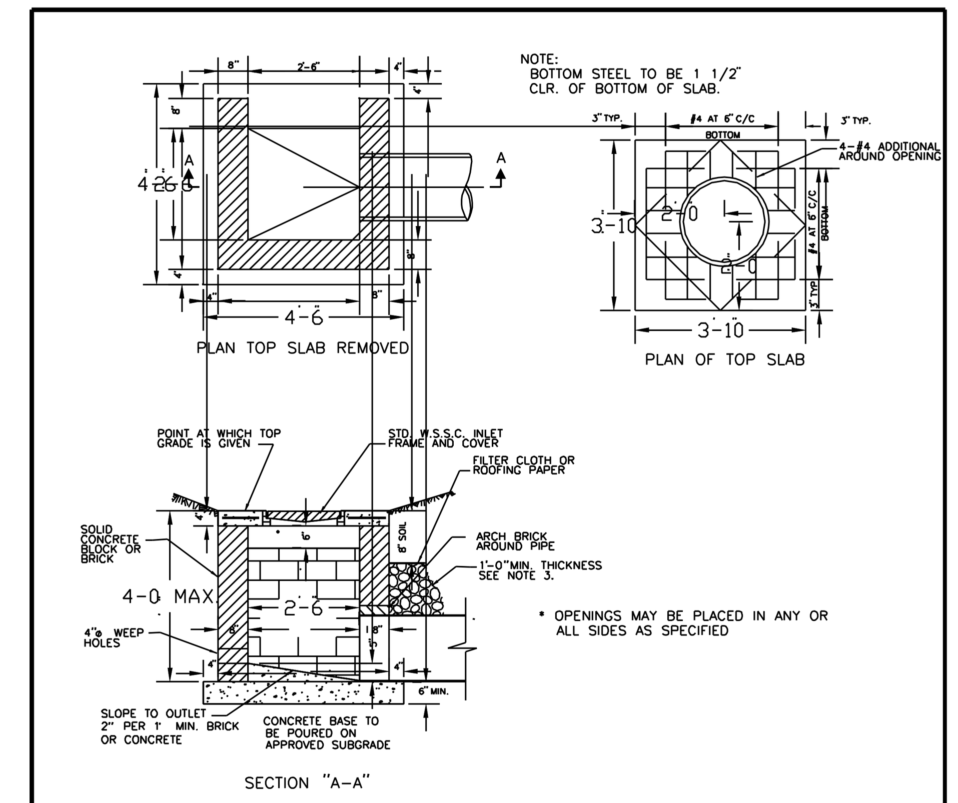

GENERAL NOTES

1. THIS STANDARD TO BE USED AS TERMINAL INLET ONLY.
2. USE SOLID MASONRY (BRICK OR CONCRETE BLOCK) OR POURED CONCRETE FOR WALLS.
3. INSTALL FOUNDATION DRAINAGE MATERIAL AROUND STRUCTURE FROM BOTTOM OF WEEP HOLES TO WITHIN 8" OF SURFACE. MIN. 1' FROM WALL.
4. WEEP HOLES TO BE PLACED IN WALL OPPOSITE OUTLET PIPE 5" ABOVE PIPE INVERT. COVER OPENING WITH 1/2" HARDWARE CLOTH.
5. MORTAR SHALL CONFORM TO ASTM SPECIFICATION C 270 TYPE M.
6. REFER TO MARYLAND STATE HIGHWAY ADMINISTRATION FOR MATERIALS AND METHODS OF CONSTRUCTION.
7. f'c= 3,500 PSI AT 28 DAYS.

APPROVED ____ DATE	REVISED	MONTGOMERY COUNTY DEPARTMENT OF TRANSPORTATION
DIRECTOR, DEPT. OF TRANS.		"D" INLET
CHIEF, DIV. OF ENG. SERVICES		STANDARD NO. MC-503.01

P:\STD\MC50301 8-18-94 8:10:17 am EST

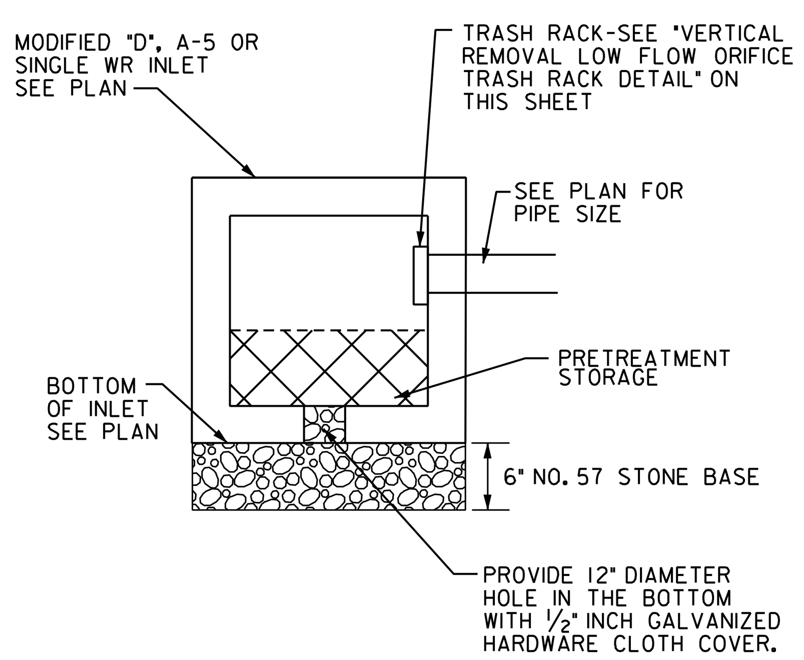

MODIFIED INLET STRUCTURE

*NOTE: SEE SPECIFIC INLET DETAIL FOR MORE INFORMATION

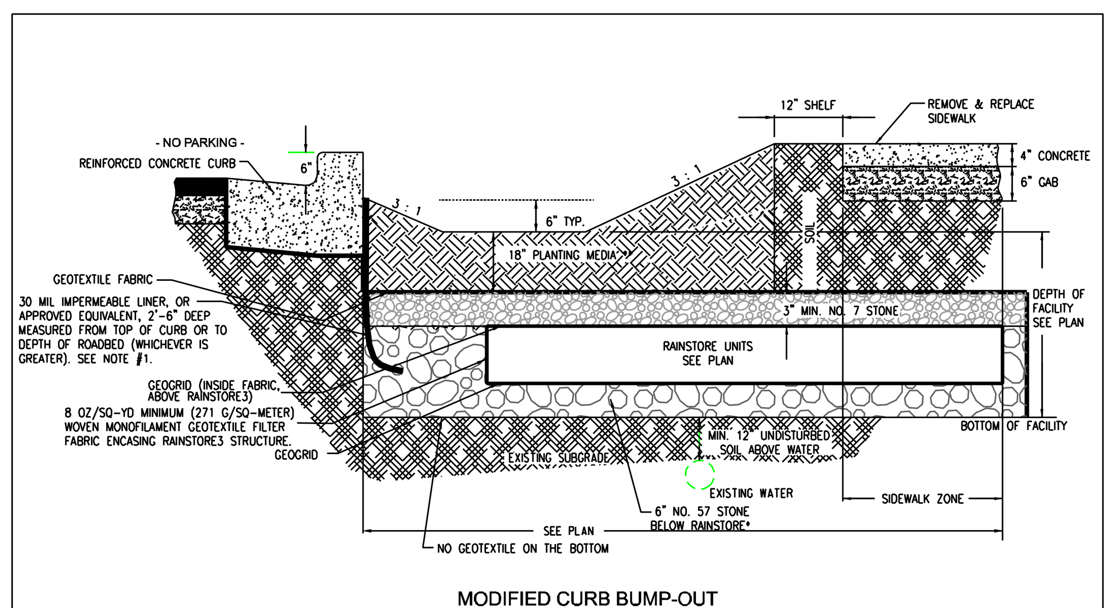

MODIFIED CURB BUMP-OUT
BIOSWALE FOR SWM#5

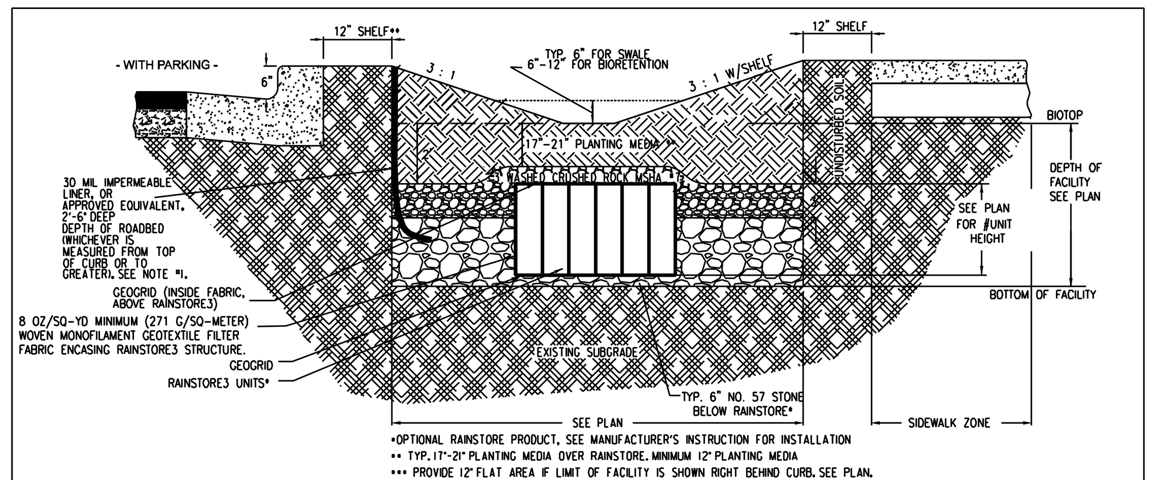

BIORETENTION/BIOSWALE
WITH RAINSTORE

NOTES:

1. Liner required when face of new curb is < 2ft from adjacent water line or on secondary collectors and higher street classifications. Liner may be required on local streets with transit routes, higher traffic volumes, or when facility is adjacent to travel lane, at the discretion of the Engineer.
2. Per DOT requirements, either leave existing curb in place or replace curb and gutter per MC-100.01 with 12" thick gutter pan.
3. Per plan, provide either 6" dia. Sch 40 PVC underdrain or a 6" deep gravel drain layer (MSHA #57).
4. See plan for dimensions.

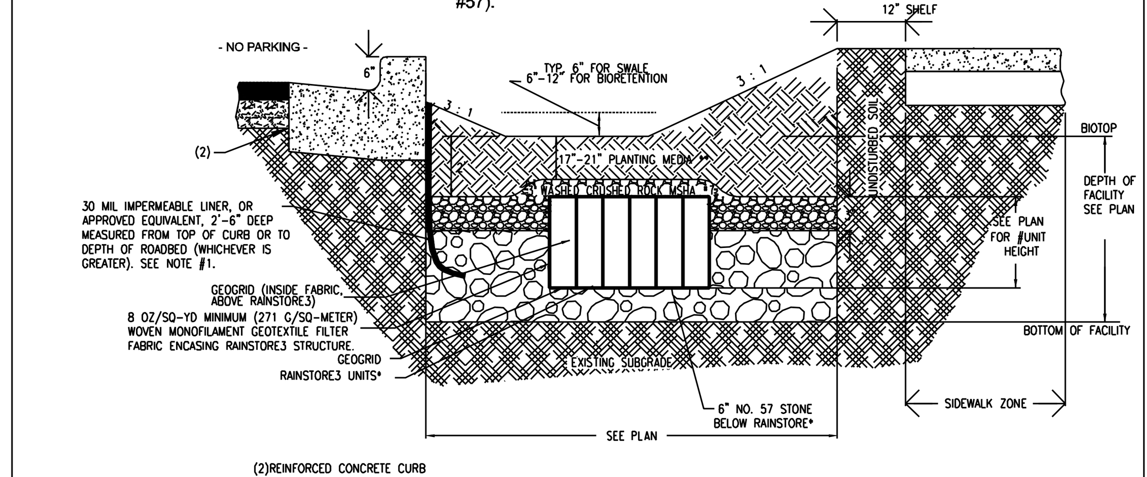

BIORETENTION/BIOSWALE
WITH RAINSTORE

- DRAWING NOT TO SCALE -

FOR PLAN VIEW REFER TO SW-300

RIGHT - OF - WAY SWM RETROFIT TYPICAL DETAILS DRAFT 11-30-2009

Bio-retention/Swale Sections With and without Parking		NUMBER MODIFICATION MODEL

REVISED May 30, 2012

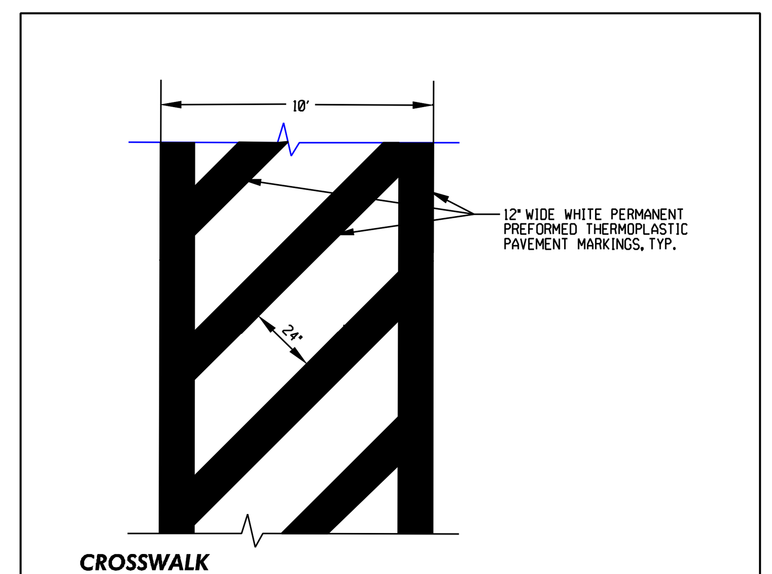

CROSSWALK
NOT TO SCALE

THE MARYLAND-NATIONAL CAPITAL PARK AND PLANNING COMMISSION, DEPARTMENT OF PARK AND PLANNING

M-NCPPC PERMIT NO. 2012.32

M-NCPPC PARK FACILITY CODE P60

REVIEWED BY ____

APPROVED BY ____ CHIEF, CONSTRUCTION SECTION

DATE APPROVED ____

M-NCPPC PERMIT SHEET # ____ OF ____

THIS IS NOT A PERMIT TO BEGIN CONSTRUCTION

This approval is for technical review only. For permit For permit information, contact Jay Childs, Construction Supervisor at (301)495-2574.

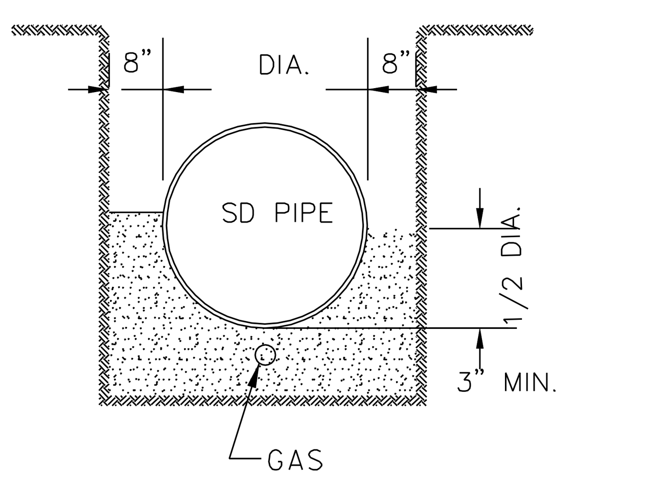

CONCRETE CRADLE DETAIL
NOT TO SCALE

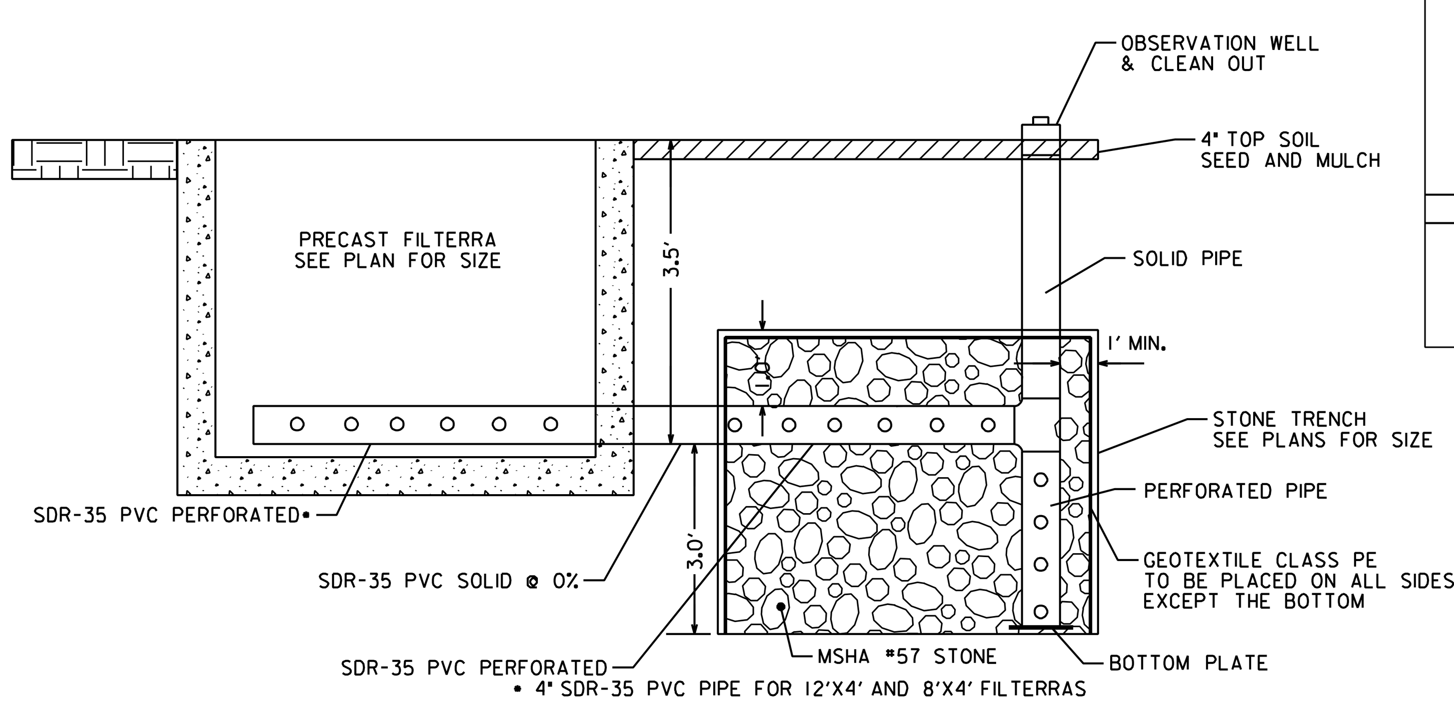

* 4" SDR-35 PVC PIPE FOR 12'X4' AND 8'X4' FILTERRAS SEE MANUFACTURER'S SPECIFICATION FOR FILTERRA.

TYPICAL FILTERRA AND STONE TRENCH PROFILE
NOT TO SCALE

Gannett Fleming

GPI GREENMAN-PEDERSEN, INC.

MONTGOMERY COUNTY DEPARTMENT OF TRANSPORTATION ROCKVILLE, MARYLAND	MONTGOMERY COUNTY DEPARTMENT OF TRANSPORTATION GAITHERSBURG, MARYLAND	ROW LID RETROFIT DENNIS AVENUE
Accepted	Reviewed	PHASE 1 & 2 REVISED DETAIL SHEET
Chief, Maintenance Division ____ Date	Chief, Transportation Planning and Design Section ____ Date	SCALE : AS SHOWN DT03
Designed by: ZK Drawn by: ZK/KK	Checked by: WRP	Project No. : 2008037.00 Task 112 SHEET 10 of 10

FILE: N:\2008\2008037\2008037.00\2008037.00 Tsk 120 Dennis Avenue Phase 5 & 6\DGN\pDT-0002_DENNIS_AVEph5.dgn
DATE: Monday, February 25, 2013 AT 04:35 PM