MONTGOMERY COUNTY DEPARTMENT OF ENVIRONMENTAL PROTECTION

FRANKLIN KNOLLS PHASE 3

LOW IMPACT DEVELOPMENT PROJECT

CONTRACT NO. 8803000101-CD
Task Order 13 - Subtask B

INDEX OF SHEETS

(FULL SET)	MCDPS	
1		TITLE SHEET
2		OVERALL SITE PLAN
2A		CURB REPLACEMENT PLAN
3–5		GEOMETRIC LAYOUT
6–9		STORMWATER MANAGEMENT DETAILS
10–39		PLAN AND PROFILE
40–41		EROSION & SEDIMENT NOTES
42		EROSION & SEDIMENT CONTROL PLAN
43		LANDSCAPE PLAN

THE LOCATION OF THE UNDERGROUND AND SURFACE UTILITIES SHOWN ON THE PLANS ARE FOR INFORMATION AND GUIDANCE ONLY. NO GUARANTEE IS MADE AS TO THE ACCURACY OF SAID LOCATIONS. CONTRACTOR SHALL CONTACT "MISS UTILITY" AT 1-800-257-777, 48 HOURS PRIOR TO EXCAVATION FOR MARKING AND LOCATION OF UTILITIES.

CONVENTIONAL SYMBOLS
EXISTING CONSTRUCTION

- 100 YEAR FLOODPLAIN
- RIGHT OF WAY LINE
- PROPERTY LINE
- CONCRETE CURB AND GUTTER
- EDGE OF WOODED AREAS
- TREE (FREE STANDING)
- SIGN
- FIRE HYDRANT
- LIGHT POLE
- UTILITY POLE
- STORM DRAIN (SD)
- SANITARY (SS) — 8" SAN — (SS)
- WATER — W — 24"W
- GAS — G —
- ELECTRICAL HAND BOX - SIGNALS — H.B.
- ELECTRIC (UNDERGROUND) — (E)

PROPOSED CONSTRUCTION

- ℄ CONSTRUCTION — 101 +50 102
- CURB & GUTTER
- TRAVERSE POINT
- SIDEWALK
- PAVEMENT REMOVAL
- APPROXIMATE LIMITS OF CUT AND/OR FILL — C — F
- LIMIT OF DISTURBANCE — LOD
- STORM DRAIN PIPE
- TEST PIT — TP-2
- TEMPORARY CONSTRUCTION EASEMENT — TCE — TCE — TCE
- PERPETUAL EASEMENT — PE — PE — PE

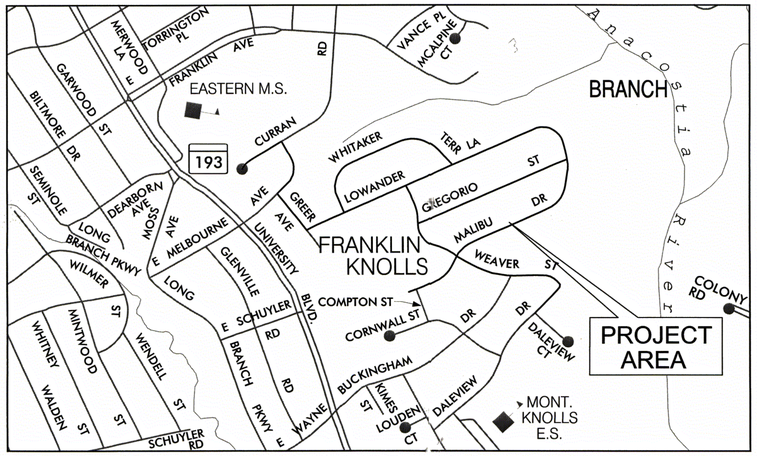

VICINITY MAP
SCALE : 1"= 500'

GENERAL NOTES

1. THE CONTRACTOR WILL IMMEDIATELY INFORM THE COUNTY OF ANY DISCREPANCIES FOUND BETWEEN THE PROJECT PLANS AND CONTRACT SPECIFICATIONS.
2. FOR CONSTRUCTION, ALL HORIZONTAL SHALL BE BASED ON NAD 83/91, NAVD 88 DATUM.
3. TYPES OF STORM DRAIN STRUCTURES REFER TO THE "DESIGN STANDARDS" OF MONTGOMERY COUNTY DEPARTMENT OF TRANSPORTATION, UNLESS OTHERWISE NOTED.
4. WHEN THE DROP ON THE MAIN LINE THROUGH A STORM DRAIN STRUCTURE CAN BE ACCOMMODATED BY AN INVERT SLOPE OF 1.5:1 OR FLATTER, A ROUNDED CHANNEL LINED WITH SEWER BRICK ON EDGE SHALL BE BUILT TO THE CROWN OF THE PIPES. WHEN THE INVERT SLOPES WOULD BE GREATER THAN 1.5:1 A SPECIAL INVERT SHALL BE CONSTRUCTED AS NOTED.
5. ALL STORM DRAIN PIPE SHALL BE INSTALLED WITH CLASS "C" BEDDING UNLESS OTHERWISE SPECIFIED.
6. THE CONTRACTOR SHALL MAKE FIELD ADJUSTMENTS TO STORM DRAIN STRUCTURES, WHEN NECESSARY, TO MEET EXISTING CONDITIONS, AS APPROVED BY MONTGOMERY COUNTY DEPARTMENT OF PERMITTING SERVICES RIGHT OF WAY INSPECTOR.
7. INFORMATION CONCERNING UNDERGROUND UTILITIES WAS OBTAINED FROM AVAILABLE RECORDS, BUT THE CONTRACTOR MUST DETERMINE THE EXACT LOCATIONS AND ELEVATIONS OF THE LINES BY DIGGING TEST PITS BY HAND AT ALL UTILITY CROSSINGS, WELL IN ADVANCE OF TRENCHING. IF CLEARANCES ARE LESS THAN SHOWN OR TWELVE (12) INCHES, WHICHEVER IS LESS, THE CONTRACTOR SHALL CONTACT THE COUNTY.
8. REPAIRS TO UTILITIES OR PROPERTY DAMAGE AS A RESULT OF THE CONTRACTOR'S NEGLIGENCE OR METHOD OF OPERATION MUST BE MADE AT THE CONTRACTOR'S EXPENSE BEFORE PROCEEDING WITH CONSTRUCTION.
9. CALL "MISS UTILITY" AT 1-800-257-7777 FORTY-EIGHT (48) HOURS PRIOR TO BEGINNING EXCAVATION TO DETERMINE THE EXACT LOCATION OF EXISTING UTILITIES.
10. CLEARING IS TO BE LIMITED TO THE "LIMIT OF DISTURBANCE" AS SHOWN ON THE PLANS.
11. ALL GRADING SHALL BE DONE IN SUCH A MANNER AS TO PROVIDE POSITIVE DRAINAGE.
12. DISTURBED AREAS ADJACENT TO ESTABLISHED LAWNS SHALL BE SODDED. OTHER DISTURBED AREAS SHALL BE SEEDED AND MULCHED.
13. THE CONTRACTOR SHALL UTILIZE THE MCDOT'S BLANKET ROADSIDE TREE PERMIT #2013-0557 FOR ANY MAINTENANCE, TREATMENT, PLANTING, REMOVAL, OR ROOT PRUNING ON TREES WITHIN THE PUBLIC RIGHT OF WAY. PERMIT REQUIREMENTS MAY BE OBTAINED FROM THE MCDOT ARBORIST AT (240) 777-7653.
14. CONTACT THE WASHINGTON SUBURBAN SANITARY COMMISSION SYSTEM MAINTENANCE ENGINEER BEFORE EXCAVATING BENEATH OR IN THE VICINITY OF EXISTING WATER OR SEWER LINES. BACKFILL TO BE DONE UNDER SUPERVISION OF W.S.S.C. CALL 301-699-4420. W.S.S.C. UTILITY CONTRACT NUMBERS WITHIN THE PROJECT LIMITS: 55779 & 582829 (SANITARY) AND 55778 & 582828 (WATER).
15. CONTACT WASHINGTON GAS DISPATCH OFFICER AT (703)750-4831 BEFORE EXCAVATING BENEATH OR IN THE VICINITY OF EXISTING GAS MAIN AND SERVICE LATERALS.
16. CONTRACTOR SHALL COORDINATE WITH THE MONTGOMERY COUNTY DEPARTMENT OF PERMITTING SERVICES (DPS) RIGHT OF WAY INSPECTOR AND SEDIMENT CONTROL INSPECTOR PRIOR TO COMMENCING ANY LAND DISTURBING ACTIVITIES.
17. CONTRACTOR SHALL PROVIDE STANDARD TRAFFIC CONTROL IN ACCORDANCE WITH MCDOT FOR ALL CONSTRUCTION ACTIVITIES. UNLESS NOTED OTHERWISE, TRAFFIC CONTROL SHALL BE IN ACCORDANCE WITH MCDOT TCP STANDARD 101.01, 101.02, OR 102.01.
18. CONTRACTOR SHALL CONSTRUCT PROPOSED IMPROVEMENTS IN COMPLIANCE WITH CURRENT ADA GUIDELINES.

ENGINEER'S CERTIFICATION

I HEREBY CERTIFY THAT THESE DOCUMENTS WERE PREPARED OR APPROVED BY ME, AND THAT I AM A DULY LICENSED PROFESSIONAL ENGINEER UNDER THE LAWS OF THE STATE OF MARYLAND, LICENSE NO. 31204, EXPIRATION DATE: JAN. 13, 2017.

06-02-15
DATE

Kimi Schmidt
KIMI C SCHMIDT, P.E.
P.E. # 31204

STATE OF MARYLAND · KIMI C. SCHMIDT · No. 31204 · PROFESSIONAL ENGINEER

DESIGN CERTIFICATION

I HEREBY CERTIFY THAT THESE DOCUMENTS WERE PREPARED OR APPROVED BY ME IN ACCORDANCE WITH MONTGOMERY COUNTY DEPARTMENT OF TRANSPORTATION "STORM DRAIN DESIGN CRITERIA" AND THAT I AM A DULY LICENSED PROFESSIONAL ENGINEER UNDER THE LAWS OF THE STATE OF MARYLAND LICENSE NO. 31204, EXPIRATION DATE: JANUARY 13, 2017.

I FURTHER CERTIFY THAT THE TOTAL AMOUNTS OF EXCAVATION AND FILL AS SHOWN ON THESE PLANS HAVE BEEN COMPUTED TO BE 981 CUBIC YARDS OF EXCAVATION AND 1 CUBIC YARDS OF FILL AND THAT THE TOTAL AREA TO BE DISTURBED AS SHOWN ON THESE PLANS HAS BEEN DETERMINED TO BE A MAXIMUM OF 33,980 SQUARE FEET OR 0.78 ACRES.

06-02-15
DATE

Kimi Schmidt
KIMI C SCHMIDT, P.E.
P.E. # 31204

STATE OF MARYLAND · KIMI C. SCHMIDT · No. 31204 · PROFESSIONAL ENGINEER

06-02-15
DATE

Katharine Kyle Mundy
KATHARINE KYLE MUNDY, R.L.A.
R.L.A. # 3565

BOARD OF EXAMINERS OF LANDSCAPE ARCHITECTS · 3565 · KATHARINE KYLE MUNDY · STATE OF MARYLAND

CONTRACTOR SHALL TAKE SPECIAL PRECAUTIONS TO PREVENT DAMAGE TO THE NEWLY INSTALLED PAVEMENT, CURB AND SIDEWALK BY MCDOT. CONTRACTOR IS RESPONSIBLE FOR THE DEMOLITION AND REMOVAL OF ALL DEMOLISHED ITEMS NECESSARY FOR THE CONSTRUCTION OF THEIR WORK. REPLACEMENT OF ANY DAMAGED ITEMS SHALL BE THE RESPONSIBILITY OF THE CONTRACTOR FOR NO ADDITIONAL COMPENSATION.

CONTRACTOR SHALL COORDINATE WITH THE COUNTY ARBORIST TO MINIMIZE IMPACTS TO EXISTING TREES AND TO DETERMINE THE LIMITS OF ROOT PRUNING OR TREE REMOVAL AS NECESSARY. ALL IMPACTED TREES SHALL BE DOCUMENTED FOR CURRENT HEALTH PRIOR TO CONSTRUCTION.

PROPOSED SECTIONS OF CURB AND GUTTER SHOWN ON THIS PLAN SET SHOULD BE CONSTRUCTED AT A CONSTANT SLOPE AND MATCH THE EXISTING CURB ELEVATIONS AT THE TIE-IN POINTS UNLESS OTHERWISE NOTED. STATION LIMITS ARE APPROXIMATE AND MAY BE MODIFIED DURING CONSTRUCTION.

OWNER/CONTACT/ADDRESS:

DEPARTMENT OF ENVIRONMENTAL PROTECTION
255 ROCKVILLE PIKE, STE 120
ROCKVILLE MD 20850-4166
(240) 777-7713 CRAIG CARSON

J-B DPS PERMIT NO. 312907 CLM

MONTGOMERY COUNTY, MARYLAND
DEPARTMENT OF PERMITTING SERVICES
FINAL APPROVAL
DATE 6/3/2015
BY Atty Paysbuni

•DPS ROW APPROVALS APPLICABLE TO SHEETS 1, 2, 2A, 6-39, 41, X, &43.

McCORMICK TAYLOR
509 South Exeter Street
4th Floor
Baltimore, Maryland 21202
(410) 662-7400

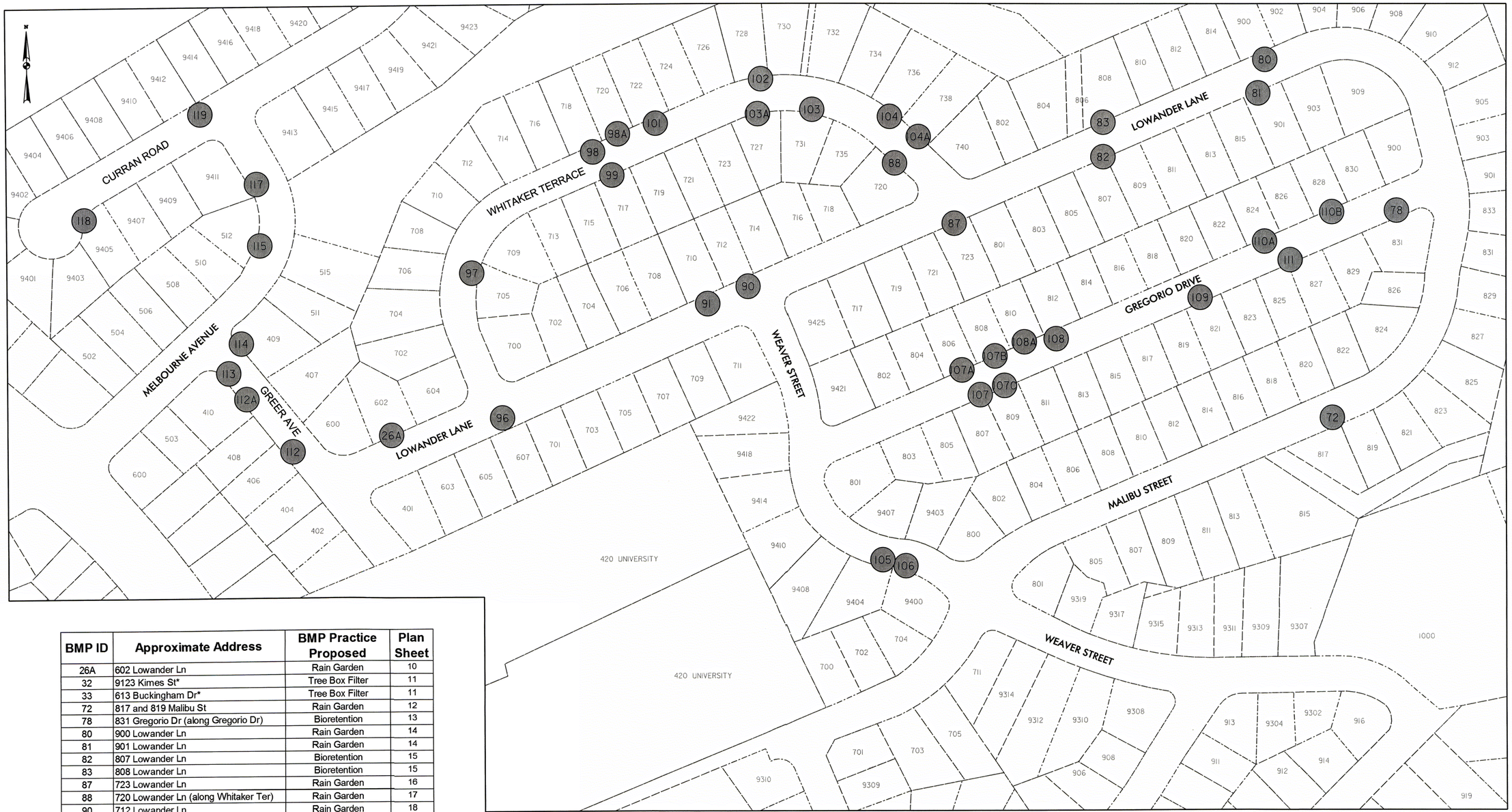

BMP ID	Approximate Address	BMP Practice Proposed	Plan Sheet
26A	602 Lowander Ln	Rain Garden	10
32	9123 Kimes St*	Tree Box Filter	11
33	613 Buckingham Dr*	Tree Box Filter	11
72	817 and 819 Malibu St	Rain Garden	12
78	831 Gregorio Dr (along Gregorio Dr)	Bioretention	13
80	900 Lowander Ln	Rain Garden	14
81	901 Lowander Ln	Rain Garden	14
82	807 Lowander Ln	Bioretention	15
83	808 Lowander Ln	Bioretention	15
87	723 Lowander Ln	Rain Garden	16
88	720 Lowander Ln (along Whitaker Ter)	Rain Garden	17
90	712 Lowander Ln	Rain Garden	18
91	710 Lowander Ln	Rain Garden	18
96	607 Lowander Ln	Rain Garden	19
97	705 Whitaker Ter	Rain Garden	20
98/98A	718 and 720 Whitaker Ter	Rain Garden	21
99	717 Whitaker Ter	Rain Garden	22
101	722 Whitaker Ter	Rain Garden	23
102	728 and 730 Whitaker Ter	Rain Garden	24
103/103A	731 and 727 Whitaker Ter	Rain Garden	25
104/104A	736 and 738 Whitaker Ter	Rain Garden	26
105	9404 Weaver St	Rain Garden	27
106	9400 Weaver St (along Weaver St)	Rain Garden	27
107/107C	809 and 807 Gregorio Dr	Rain Garden	28
107A/B	806 and 808 Gregorio Dr	Rain Garden	29
108/108A	812 and 810 Gregorio Dr	Rain Garden	30
109	821 Gregorio Dr	Rain Garden	31
110A/B	824 and 828 Gregorio Dr	Rain Garden	32
111	825 and 827 Gregorio Dr	Rain Garden	33

*SEE INSET AT BOTTOM RIGHT OF THIS SHEET FOR STREET LOCATION

BMP ID	Approximate Address	BMP Practice Proposed	Plan Sheet
112	406 Greer Ave	Rain Garden	34
112A	408 Greer Ave	Rain Garden	34
113	410 Greer Ave (along Greer Ave)	Bioretention	35
114	409 Greer Ave (along Greer Ave)	Rain Garden	35
115	510 and 512 Melboune Ave	Rain Garden	36
117	9411 Curran Rd (along Melbourne Ave)	Rain Garden	37
118	9405 Curran Rd	Rain Garden	38
119	9412 Curran Rd	Rain Garden	39

PROPOSED LID FACILITY LOCATIONS

80' 0 80' 160'

SCALE: 1"=80'

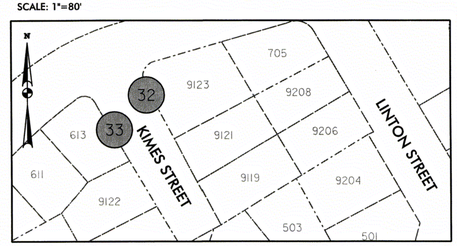

PROPOSED LID FACILITY LOCATIONS

80' 0 80' 160'

SCALE: 1"=80'

McCORMICK TAYLOR
509 South Exeter Street
4th Floor
Baltimore, Maryland 21202
(410) 662-7400

OVERALL SITE PLAN

FRANKLIN KNOLLS-PHASE 3

SLIGO (13th) ELECTION DISTRICT

PARCEL X, SUBDIVISION X, LIBER X FOLIO X

MONTGOMERY COUNTY, MARYLAND

CLIENT: MONTGOMERY COUNTY DEPT OF ENVIRONMENTAL PROTECTION
255 ROCKVILLE PIKE, RM. 120
ROCKVILLE, MD 20850-4166
MR. PAUL BOGLE, P.E.
(240) 777-7757

DESIGN	
DRAFT	WJW
APPROVED	HJD
DATE	JUNE 2015
SCALE	

SHEET 2 OF 43

P:\E-15150133 - Roadway LID - Forest Estates and the Four Corners Area\Design\Engineering\PlanSet\FK P3\pGN-L001_FK3.dgn
PLOTTED: Tuesday, June 02, 2015 AT 10:34 AM

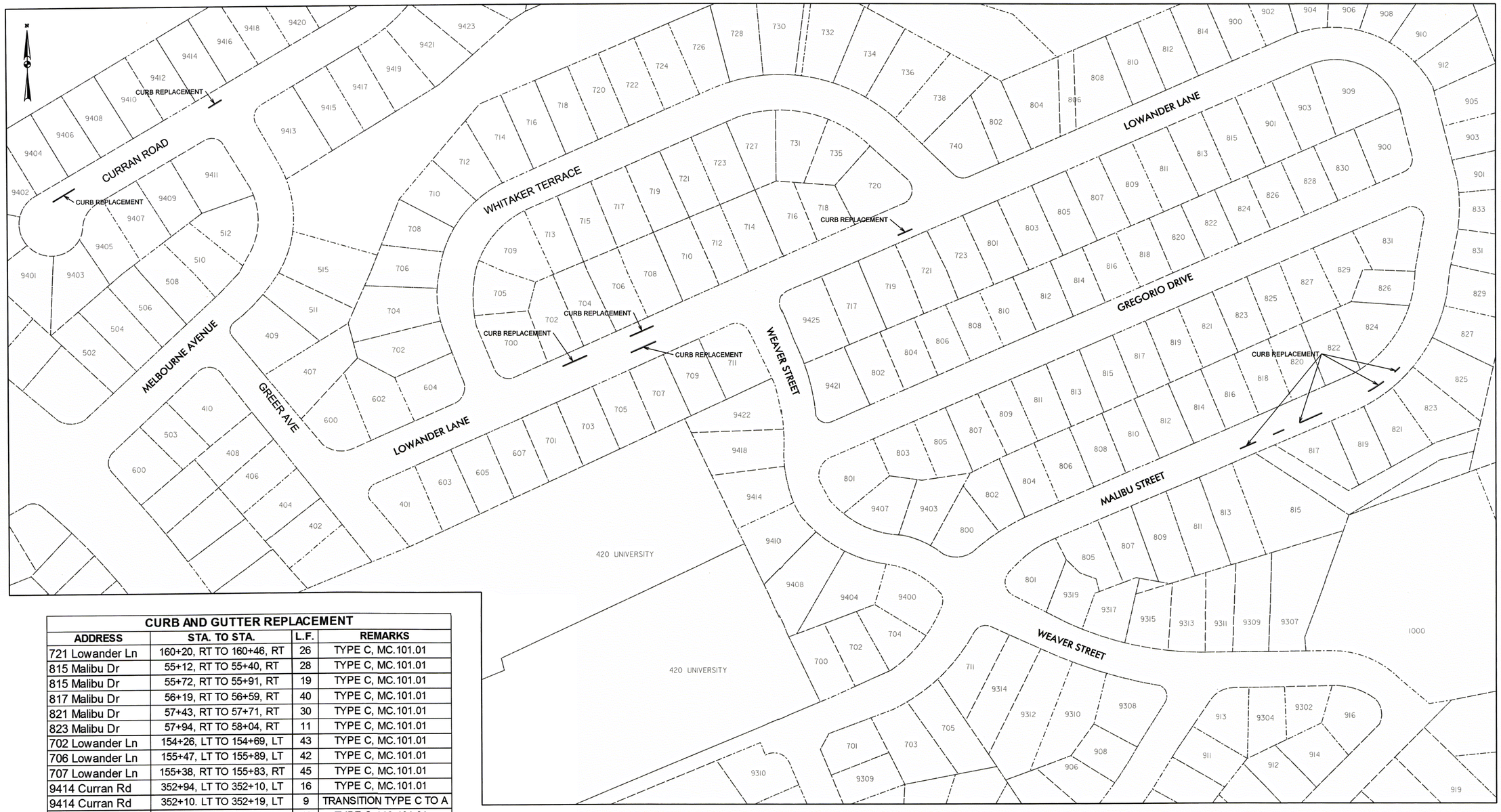

PROPOSED CURB AND GUTTER REPLACEMENT LOCATIONS

80' 0 80' 160'
SCALE: 1"=80'

CURB AND GUTTER REPLACEMENT			
ADDRESS	STA. TO STA.	L.F.	REMARKS
721 Lowander Ln	160+20, RT TO 160+46, RT	26	TYPE C, MC.101.01
815 Malibu Dr	55+12, RT TO 55+40, RT	28	TYPE C, MC.101.01
815 Malibu Dr	55+72, RT TO 55+91, RT	19	TYPE C, MC.101.01
817 Malibu Dr	56+19, RT TO 56+59, RT	40	TYPE C, MC.101.01
821 Malibu Dr	57+43, RT TO 57+71, RT	30	TYPE C, MC.101.01
823 Malibu Dr	57+94, RT TO 58+04, RT	11	TYPE C, MC.101.01
702 Lowander Ln	154+26, LT TO 154+69, LT	43	TYPE C, MC.101.01
706 Lowander Ln	155+47, LT TO 155+89, LT	42	TYPE C, MC.101.01
707 Lowander Ln	155+38, RT TO 155+83, RT	45	TYPE C, MC.101.01
9414 Curran Rd	352+94, LT TO 352+10, LT	16	TYPE C, MC.101.01
9414 Curran Rd	352+10. LT TO 352+19, LT	9	TRANSITION TYPE C TO A
9404 Curran Rd	349+94, LT TO 350+36, LT	42	TYPE C, MC.101.01

McCORMICK TAYLOR
509 South Exeter Street
4th Floor
Baltimore, Maryland 21202
(410) 662-7400

CURB REPLACEMENT PLAN

FRANKLIN KNOLLS-PHASE 3

SLIGO (13th) ELECTION DISTRICT
PARCEL X, SUBDIVISION X, LIBER X FOLIO X
MONTGOMERY COUNTY, MARYLAND

CLIENT: MONTGOMERY COUNTY DEPT OF
ENVIRONMENTAL PROTECTION
255 ROCKVILLE PIKE, RM. 120
ROCKVILLE, MD 20850-4166
MR. PAUL BOGLE, P.E.
(240) 777-7757

DESIGN	WJW
DRAFT	
APPROVED	HJD
DATE	JUNE 2015
SCALE	

SHEET 2A OF 43

FILE: I:\15\15213 - Roadway, LID – Forest Estates and the Four Corners Area\Design\Engineering\PlanSet\FK P3\pDN-L002_FK3.dgn
PLOTTED: Tuesday, June 02, 2015 AT 10:34 AM

BASELINE CONTROL COORDINATES

℄ CONSTRUCTION	POINT NO.	NORTHING	EASTING	STATION	BEARING AHEAD	RADIUS
WEAVER STREET	POB =	489017.4249	1313687.0682	10+00.00	S 63°40'34.7458" E	
	PC =	489014.2615	1313693.4623	10+07.13	S 63°40'34.7458" E	
	PI	489005.4460	1313711.2806	10+27.01	S 77°15'12.5606" E	
	CC =	489163.9441	1313767.5170			167.00'
	PT=	489001.0597	1313730.6705	10+46.71	S 77°15'12.5606" E	
	PC =	488990.5766	1313777.0125	10+94.22	S 77°15'12.5606" E	
	PI	488983.8229	1313806.8678	11+24.83	S 53°43'42.1552" E	
	CC =	488847.1993	1313744.5787			147.00'
	PT=	488965.7138	1313831.5460	11+54.58	S 53°43'42.1552" E	
	PC =	488932.8892	1313876.2776	12+10.06	S 53°43'42.1552" E	
	PI	488925.6149	1313886.1907	12+22.36	S 55°55'46.7647" E	
	CC =	489448.8709	1314254.9106			640.00'
	PT=	488918.7267	1313896.3760	12+34.65	S 55°55'46.7647" E	
	POE =	488904.8164	1313916.9442	12+59.48		
MALIBU STREET	POB =	488927.1185	1313884.2700	50+00.00	N 36°23'53.6591" E	
	PC =	488951.9793	1313902.5977	50+30.89	N 36°23'53.6591" E	
	PI	488999.1122	1313937.3449	50+89.44	N 66°36'03.5569" E	
	CC =	488823.2127	1314077.2636			217.00'
	PT=	489022.3670	1313991.0860	51+45.28	N 66°36'03.5569" E	
	PC =	489250.8356	1314519.0708	57+20.57	N 66°36'03.5569" E	
	PI	489295.4982	1314622.2850	58+33.03	N 10°01'53.5900" E	
	CC =	489442.6477	1314436.0702			209.00'
	PT=	489406.2419	1314641.8750	59+26.92	N 10°01'53.5900" E	
	PC =	489508.2902	1314659.9268	60+30.55	N 10°01'53.5900" E	
	PI	489554.4207	1314668.0870	60+77.40	N 12°59'37.0168" W	
	CC =	489548.3540	1314433.4430			230.00'
	PT=	489600.0678	1314657.5539	61+22.98	N 12°59'37.0168" W	
	POE =	489636.1803	1314649.2209	61+60.04		
GERGORIO DRIVE	POB =	489224.4568	1313788.9954	100+00.00	N 66°33'36.6177" E	
	POE =	489600.9449	1314657.3515	109+46.46		

℄ CONSTRUCTION	POINT NO.	NORTHING	EASTING	STATION	BEARING AHEAD	RADIUS
LOWANDER STREET	POB =	489110.8606	1312828.8800	150+00.00	N 66°24'27.5268" E	
	PC =	489810.3959	1314430.6357	167+47.85	N 66°24'27.5268" E	
	PI	489827.5473	1314469.9080	167+90.70	S 79°33'12.6549" E	
	CC =	489682.0976	1314486.6675			140.00'
	PT=	489819.7771	1314512.0518	168+31.02	S 79°33'12.6549" E	
	POE =	489819.3387	1314514.4296	168+33.44		
WHITAKER TERRACE	POB =	489227.9585	1313097.0040	200+00.00	N 23°09'07.4662" W	
	PC =	489339.6108	1313049.2602	201+21.43	N 23°09'07.4662" W	
	PI	489503.7073	1312979.0908	202+99.90	N 66°21'31.3558" E	
	CC =	489410.3820	1313214.7638			180.00'
	PT=	489575.2753	1313142.5822	204+02.64	N 66°21'31.3558" E	
	PC =	489719.6948	1313472.4972	207+62.78	N 66°21'31.3558" E	
	PI	489787.9363	1313628.3894	209+32.95	S 45°47'23.0423" E	
	CC =	489487.9281	1313573.9526			253.00'
	PT=	489669.2749	1313750.3678	210+62.39	S 45°47'23.0423" E	
	POE =	489561.6288	1313861.0231	212+16.77		
GREER AVENUE	POB =	489360.4435	1312627.3657	250+00.00	S 38°55'03.2027" E	
	POE =	489081.6273	1312852.4831	253+58.35		
MELBOURNE AVENUE	POB =	489334.7144	1312601.5535	300+00.00	N 45°05'31.9730" E	
	PC =	489431.4334	1312698.5844	301+37.00	N 45°05'31.9730" E	
	PI	489512.5704	1312779.9830	302+51.93	N 30°11'48.8495" W	
	CC =	489536.9617	1312593.3952			149.00'
	PT=	489611.9048	1312722.1762	303+32.79	N 30°11'48.8495" W	
	POE =	489723.6749	1312657.1325	304+62.11		
CURRAN ROAD	POB =	489562.9213	1312383.9262	350+00.00	N 59°31'39.3388" E	
	POE =	489743.1044	1312690.1536	353+55.30		

CURVE DATA

							CENTER OF CURVE	
CURVE NO.	DELTA	Dc	R	T	L	E	NORTH	EAST
C-1	13°34'37.8148"	34°18'31.8600"	167.00'	19.88'	39.57'	1.18	489163.9441	1313767.5170
C-2	23°31'30.4054"	38°58'36.1948"	147.00'	30.61'	60.36'	3.15	488847.1993	1313744.5787
C-3	2°12'04.6095"	8°57'08.8760"	640.00'	12.30'	24.59'	0.12	489448.8709	1314254.9106
C-51	30°12'09.8976"	26°24'12.9061"	217.00'	58.56'	114.39'	7.76	488823.2127	1314077.2636
C-52	56°34'09.9669"	27°24'51.2950"	209.00'	112.46'	206.35'	28.34	489442.6477	1314436.0702
C-53	23°01'30.6068"	24°54'40.3506"	230.00'	46.85'	92.43'	4.72	489548.3540	1314433.4430

CURVE DATA

							CENTER OF CURVE	
CURVE NO.	DELTA	Dc	R	T	L	E	NORTH	EAST
C-151	34°02'19.8183"	40°55'32.0044"	140.00'	42.85'	83.17'	6.41	489682.0976	1314486.6675
C-201	89°30'38.8222"	31°49'51.5591"	180.00'	178.47'	281.21'	73.48	489410.3820	1313214.7638
C-202	67°51'05.6018"	22°38'47.5914"	253.00'	170.17'	299.61'	51.91	489487.9281	1313573.9526
C-301	75°17'20.8227"	38°27'12.7560"	149.00'	114.93'	195.79'	39.18	489536.9617	1312593.3952

McCORMICK TAYLOR
509 South Exeter Street
4th Floor
Baltimore, Maryland 21202
(410) 662-7400

GEOMETRIC LAYOUT

FRANKLIN KNOLLS-PHASE 3

SLIGO (13th) ELECTION DISTRICT

PARCEL X, SUBDIVISION X, LIBER X FOLIO X

MONTGOMERY COUNTY, MARYLAND

CLIENT: MONTGOMERY COUNTY DEPT OF ENVIRONMENTAL PROTECTION
255 ROCKVILLE PIKE, RM. 120
ROCKVILLE, MD 20850-4166
MR. PAUL BOGLE, P.E.
(240) 777-7757

DESIGN	KCS
DRAFT	WJW
APPROVED	HJD
DATE	JUNE 2015
SCALE	1"=100'

SHEET 3 OF 43

FILE: I:\5152\13 - Roadway \ LD - Forest Estates and the Four Corners Area\Design\Engineering\PlanSet\FK P3\pGS-P001_FK3.dgn
PLOTTED: Tuesday, June 02, 2015 AT 10:34 AM

TRAVERSE CONTROL COORDINATES

POINT NO.	STATION	OFFSET	ALIGNMENT	NORTHING	EASTING	ELEVATION
ABI00	350+17.49	37.7	CURRAN	489539.2965	1312418.1234	299.18
ABI01	352+84.00	22.88	CURRAN	489687.2241	1312640.3064	290.25
ABI02	302+68.41	22.06	MELBOURNE	489553.1774	1312763.6859	289.03
ABI03	300+65.64	20.42	MELBOURNE	489366.5946	1312662.4552	295.91
ABI04	150+38.44	22.55	LOWANDER	489105.5813	1312873.1315	311.12
ABI05	153+12.19	23.05	LOWANDER	489214.6800	1313124.2032	306.61
ABI16	155+69.15	-19.19	LOWANDER	489356.2343	1313342.7752	302.58
ABI06	157+35.35	20.9	LOWANDER	489386.0095	1313511.1312	296.15
ABI15	204+94.69	-16.55	WHITAKER	489627.3464	1313220.2686	290.52
ABI14	208+97.95	-14.44	WHITAKER	489753.3889	1313606.4069	277.45

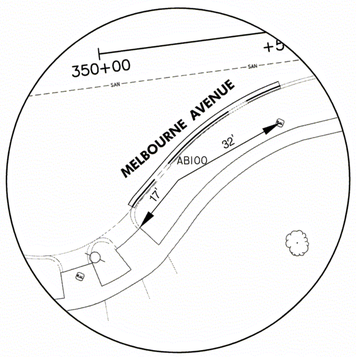

TP ABI00 (STA. 350+17.49, OFFSET 37.7)
NORTHING 489539.2965
EASTING 1312418.1234
ELEVATION 299.18

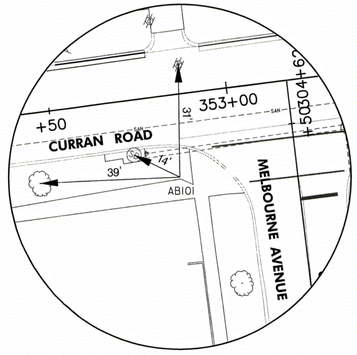

TP ABI01 (STA. 352+84.00, OFFSET 22.88)
NORTHING 489687.2241
EASTING 1312640.3064
ELEVATION 290.25

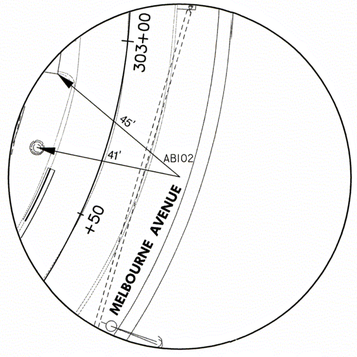

TP ABI02 (STA. 302+68.41, OFFSET 22.06)
NORTHING 489553.1774
EASTING 1312763.6859
ELEVATION 289.03

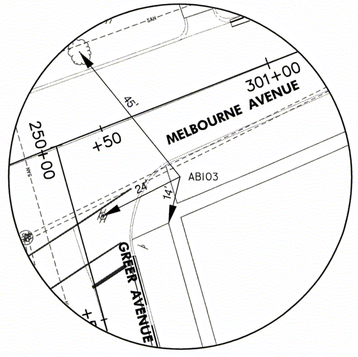

TP ABI03 (STA. 300+65.64, OFFSET 20.42)
NORTHING 489366.5946
EASTING 1312662.4552
ELEVATION 295.91

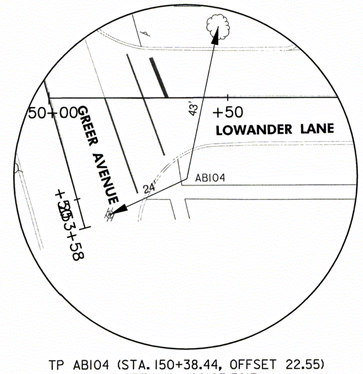

TP ABI04 (STA. 150+38.44, OFFSET 22.55)
NORTHING 489105.5813
EASTING 1312873.1315
ELEVATION 311.12

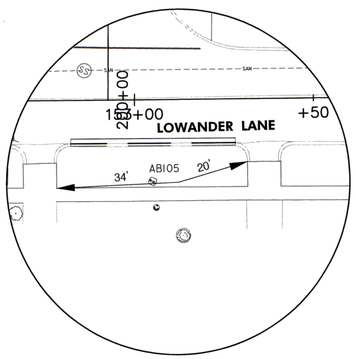

TP ABI05 (STA. 153+12.19, OFFSET 23.05)
NORTHING 489214.6800
EASTING 1313124.2032
ELEVATION 306.61

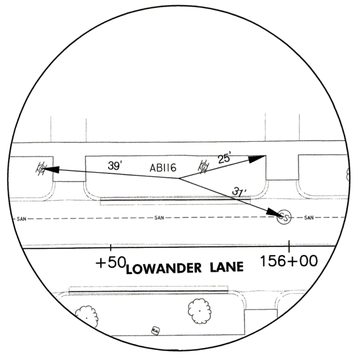

TP ABI16 (STA. 155+69.15, OFFSET -19.19)
NORTHING 489356.2343
EASTING 1313342.7752
ELEVATION 302.58

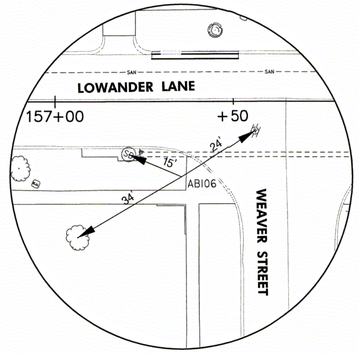

TP ABI06 (STA. 157+35.35, OFFSET 20.9)
NORTHING 489386.0095
EASTING 1313511.1312
ELEVATION 296.15

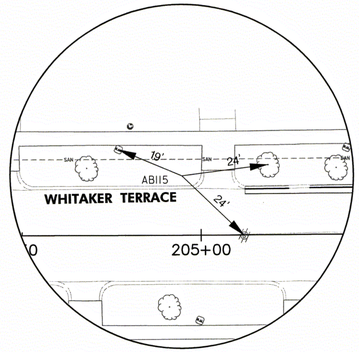

TP ABI15 (STA. 204+94.69, OFFSET -16.55)
NORTHING 489627.3464
EASTING 1313220.2686
ELEVATION 290.52

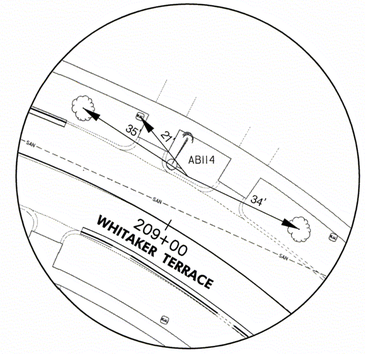

TP ABI14 (STA. 208+97.95, OFFSET -14.44)
NORTHING 489753.3889
EASTING 1313606.4069
ELEVATION 277.45

McCORMICK TAYLOR
509 South Exeter Street
4th Floor
Baltimore, Maryland 21202
(410) 662-7400

GEOMETRIC LAYOUT

FRANKLIN KNOLLS-PHASE 3

SLIGO (13th) ELECTION DISTRICT

PARCEL X, SUBDIVISION X, LIBER X FOLIO X

MONTGOMERY COUNTY, MARYLAND

CLIENT: MONTGOMERY COUNTY DEPT OF
ENVIRONMENTAL PROTECTION
255 ROCKVILLE PIKE, RM. 120
ROCKVILLE, MD 20850-4166
MR. PAUL BOGLE, P.E.
(240) 777-7757

DESIGN	KCS
DRAFT	WJW
APPROVED	HJD
DATE	JUNE 2015
SCALE	1"=100'

SHEET 4 OF 43

FILE: I:\515013 - Roadway LID - Forest Estates and the Four Corners Area\Design\Engineering\PlanSet\FK P3\pG8-P002_FK3.dgn
PLOTTED: Tuesday, June 02, 2015 AT 10:34 AM

TRAVERSE CONTROL COORDINATES

POINT NO.	STATION	OFFSET	ALIGNMENT	NORTHING	EASTING	ELEVATION
ABI07	160+81.60	-20.16	LOWANDER	489562.2253	1313812.0062	270.19
ABII7	163+64.47	11.65	LOWANDER	489646.2791	1314083.9630	259.78
ABI08	167+44.36	22.56	LOWANDER	489788.3237	1314436.4741	264.15
ABI09			LOWANDER	489777.0090	1314609.4346	265.06
ABII3	157+71.06	251.69	LOWANDER	489188.8092	1313636.2238	292.16
ABII9	103+83.75	-11.01	GREGORIO	489387.2114	1314136.6928	268.9
ABII0	60+79.58	-21.67	WEAVER	489556.2788	1314641.6174	262.64
ABIII	57+99.38	16.99	MALIBU	489282.8617	1314595.8843	241.65
ABII8	53+37.70	-8.27	MALIBU	489106.3753	1314164.4007	245.07
ABII2	11+82.63	-14.35	WEAVER	488960.6841	1313862.6562	273.33

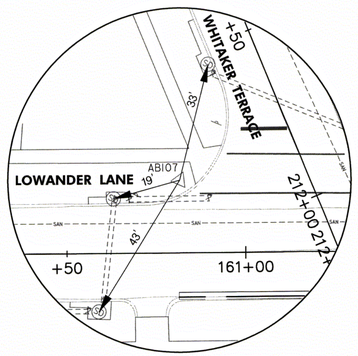

TP ABI07 (STA. 160+81.60, OFFSET -20.16)
NORTHING 489562.2253
EASTING 1313812.0062
ELEVATION 270.19

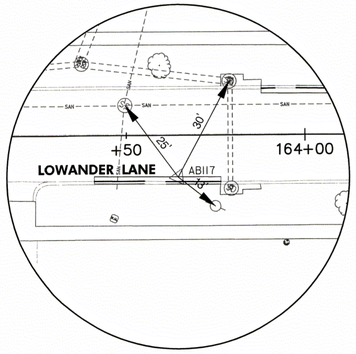

TP ABII7 (STA. 163+64.47, OFFSET 11.65)
NORTHING 489646.2791
EASTING 1314083.963
ELEVATION 259.78

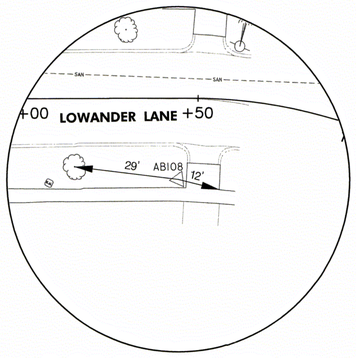

TP ABI08 (STA. 167+44.36, OFFSET 22.56)
NORTHING 489788.3237
EASTING 1314436.4741
ELEVATION 264.15

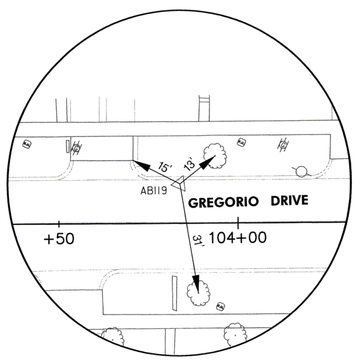

TP ABII9 (STA. 103+83.75, OFFSET -11.01)
NORTHING 489387.2114
EASTING 1314136.6928
ELEVATION 268.9

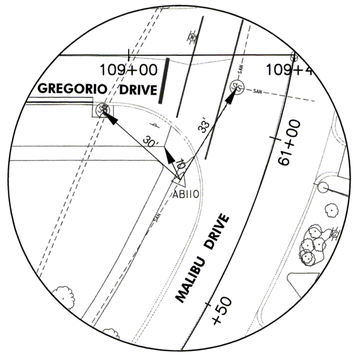

TP ABII0 (STA. 60+79.58, OFFSET -21.67)
NORTHING 489556.2788
EASTING 1314641.6174
ELEVATION 262.64

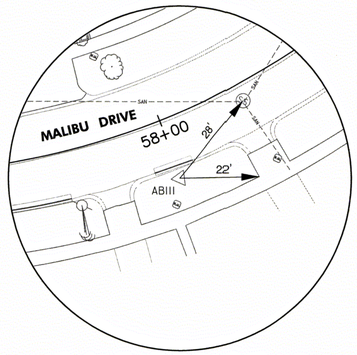

TP ABIII (STA. 57+99.38, OFFSET 16.99)
NORTHING 489282.8617
EASTING 1314595.8843
ELEVATION 241.65

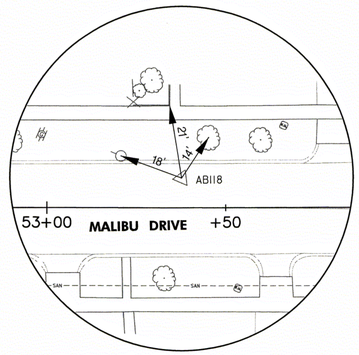

TP ABII8 (STA. 53+37.70, OFFSET -8.27)
NORTHING 489106.3753
EASTING 1314164.4007
ELEVATION 245.07

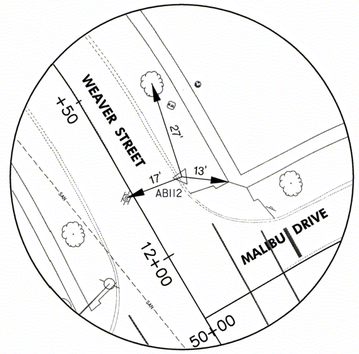

TP ABII2 (STA. 11+82.63, OFFSET -14.35)
NORTHING 488960.6841
EASTING 1313862.656
ELEVATION 273.33

McCORMICK TAYLOR
509 South Exeter Street
4th Floor
Baltimore, Maryland 21202
(410) 662-7400

GEOMETRIC LAYOUT

FRANKLIN KNOLLS-PHASE 3

SLIGO (13th) ELECTION DISTRICT
PARCEL X, SUBDIVISION X, LIBER X FOLIO X
MONTGOMERY COUNTY, MARYLAND

CLIENT: MONTGOMERY COUNTY DEPT OF
ENVIRONMENTAL PROTECTION
255 ROCKVILLE PIKE, RM. 120
ROCKVILLE, MD 20850-4166
MR. PAUL BOGLE, P.E.
(240) 777-7757

DESIGN	KCS
DRAFT	WJW
APPROVED	HJD
DATE	JUNE 2015
SCALE	1"=100'

SHEET 5 OF 43

FILE: I:\5150\13 - Roadway LID - Forest Estates and the Four Corners Area\Design\Engineering\PlanSet\FK P3\pGS-FP03_FK3.dgn
PLOTTED: Tuesday, June 02, 2015 AT 10:34 AM

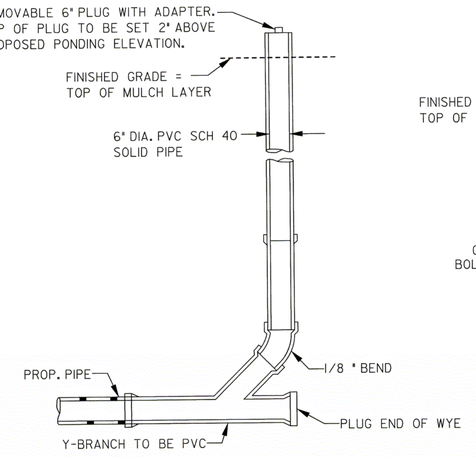

CO X STANDARD CLEANOUT DETAIL

N.T.S.

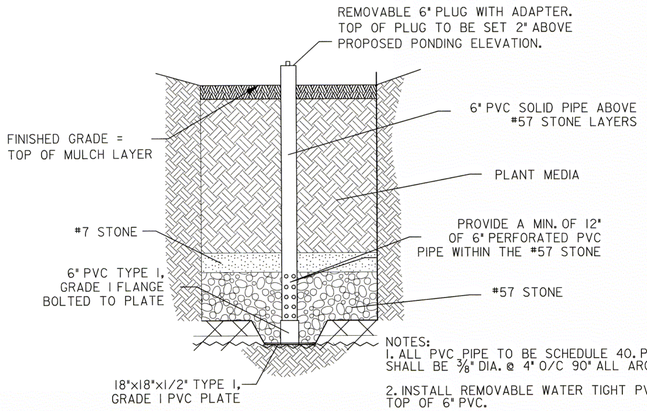

NOTES:
1. ALL PVC PIPE TO BE SCHEDULE 40. PERFORATIONS SHALL BE 3/8" DIA. @ 4" O/C 90° ALL AROUND PIPE.

2. INSTALL REMOVABLE WATER TIGHT PVC PLUG ON TOP OF 6" PVC.

3. BOTTOM EXCAVATION IS TO BE IN NATURAL UNCOMPACTED EARTH.

4. THREE 1" HOLES SHOULD BE DRILLED INTO THE BOTTOM PLATE TO ALLOW WATER TO DRAIN FROM THE OBSERVATION WELL.

5. REFER TO BMP PROFILE FOR SPECIFIC STONE AND PLANTING MEDIA DEPTHS AND ELEVATIONS.

6. PVC PIPE SHALL BE ATTACHED TO THE FLANGE WITH SOLVENT CEMENT PER THE MANUFACTURER'S SPECIFICATIONS.

OW X OBSERVATION WELL DETAIL

N.T.S.

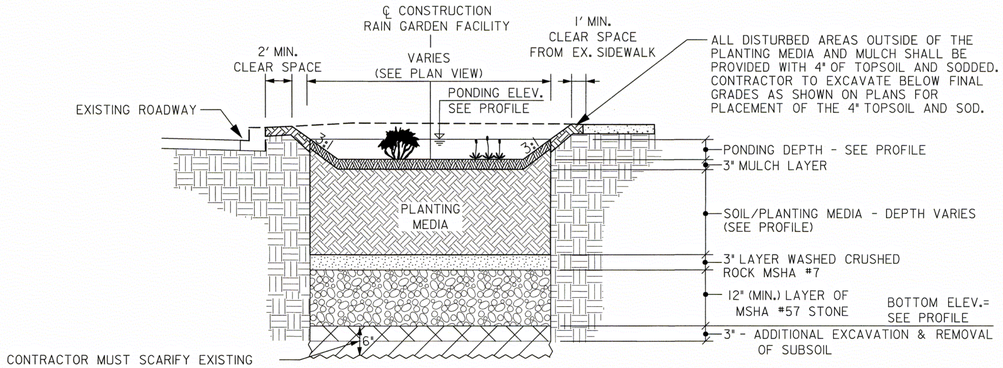

TYPICAL SECTION
RAIN GARDEN DETAIL

NOT TO SCALE

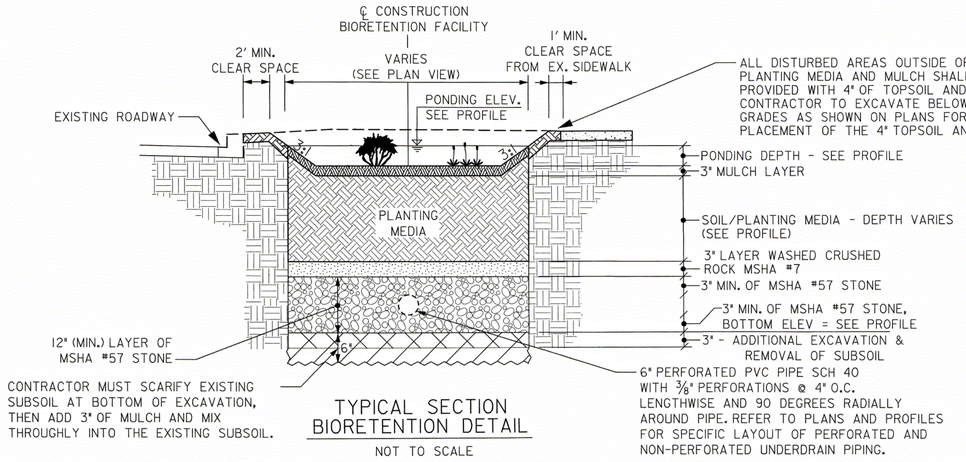

TYPICAL SECTION
BIORETENTION DETAIL

NOT TO SCALE

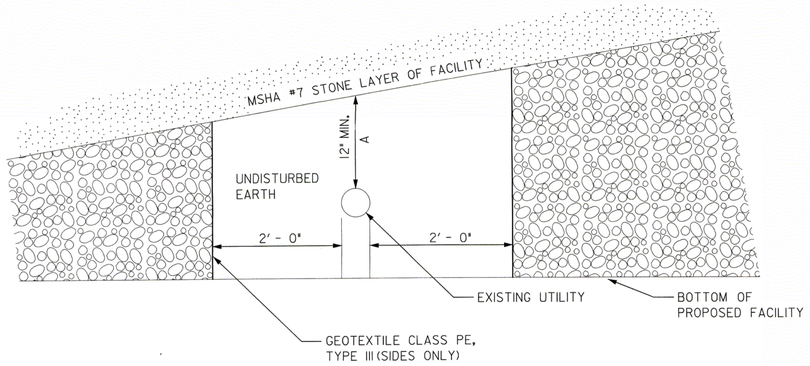

NOTES:
1. PRIOR TO BEGINNING CONSTRUCTION, THE CONTRACTOR SHALL FIELD LOCATE ALL EXISTING UTILITIES AND SHALL HAND DIG AROUND UTILITIES LOCATED IN THE VICINITY OF THE PROPOSED EXCAVATION. CONTACT MISS UTILITY 48 HOURS PRIOR TO DIGGING TO HAVE UTILITIES LOCATED.

2. WHEN THE CONTRACTOR ENCOUNTERS AN EXISTING UTILITY WITH LESS THAN 12" OF VERTICAL CLEARANCE BETWEEN THE TOP OF UTILITY AND THE BOTTOM OF THE FACILITY, THE TYPICAL UTILITY CROSSING TREATMENT SHALL BE FOLLOWED.

3. WHEN THE VERTICAL CLEARANCE BETWEEN THE TOP OF UTILITY AND THE BOTTOM OF THE NO. 57 STONE LAYER (SHOWN AS DIMENSION A) IS LESS THAN 12", ADJUST MEDIA DEPTH AND CHANNEL SLOPE TO OBTAIN THE REQUIRED COVER DEPTH.

4. UNDISTURBED EARTH AREA SURROUNDING EXISTING UTILITY SHALL EXTEND ACROSS THE ENTIRE FACILITY WIDTH.

TYPICAL UTILITY CROSSING DETAIL

NOT TO SCALE

DETAILS REVISED 01/14

McCORMICK TAYLOR
509 South Exeter Street
4th Floor
Baltimore, Maryland 21202
(410) 662-7400

STORMWATER MANAGEMENT DETAILS

FRANKLIN KNOLLS-PHASE 3

SLIGO (13th) ELECTION DISTRICT

PARCEL X, SUBDIVISION X, LIBER X FOLIO X

MONTGOMERY COUNTY, MARYLAND

CLIENT: MONTGOMERY COUNTY DEPT OF ENVIRONMENTAL PROTECTION
255 ROCKVILLE PIKE, RM. 120
ROCKVILLE, MD 20850-4166
MR. PAUL BOGLE, P.E.
(240) 777-7757

DESIGN	KCS
DRAFT	WJW
APPROVED	HJD
DATE	JUNE 2015
SCALE	NOT TO SCALE

SHEET 6 OF 43

M.E. 15016013 - Roadway I.D. - Forest Estates and the Four Corners Area\Design\Engineering\PlanSet\FK P3\pDE-D001_FK3.dgn
PLOTTED: Tuesday, June 02, 2015 AT 10:34 AM

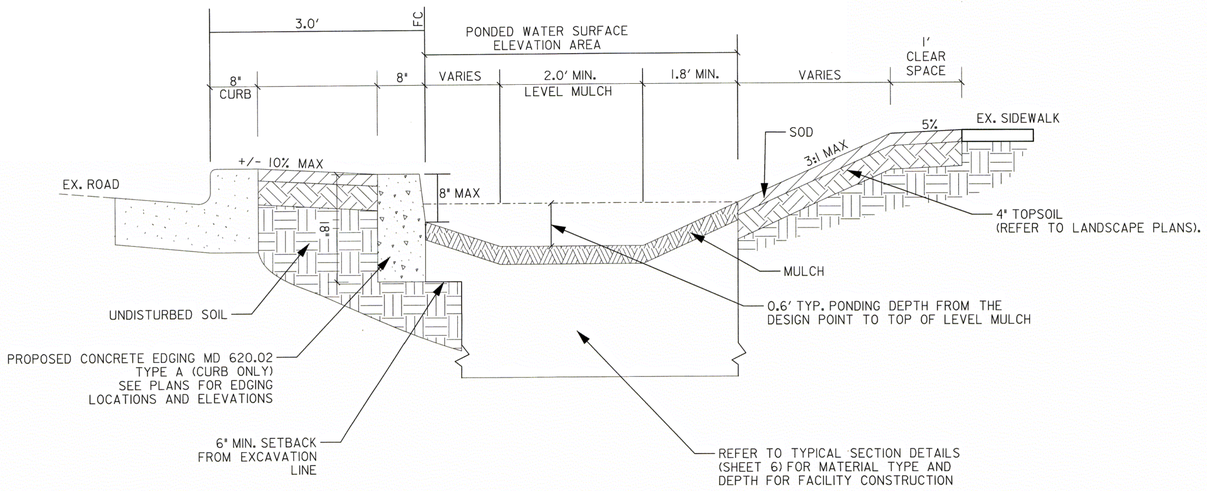

TYPICAL RIGHT OF WAY WITH CONCRETE EDGING

SCALE: 1"=1'

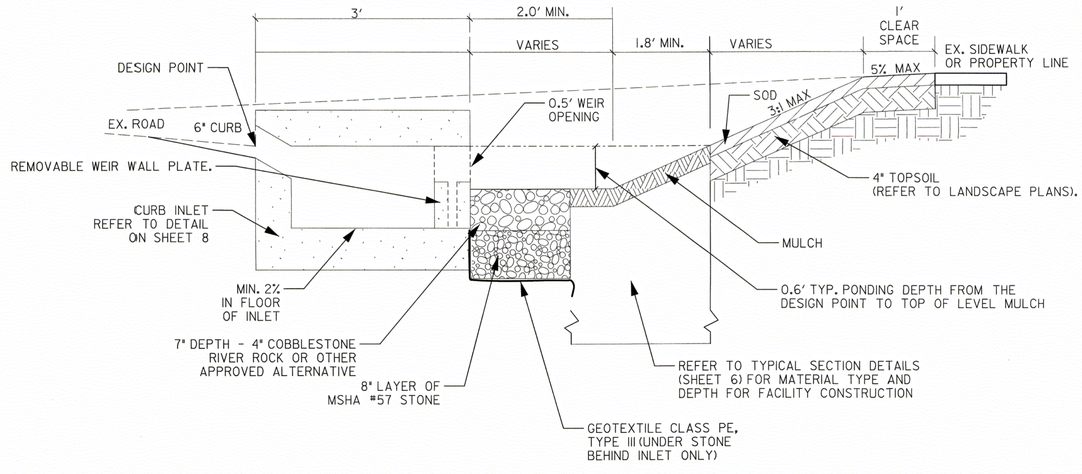

TYPICAL RIGHT OF WAY INLET SECTION

SCALE: 1"=1'

DETAILS REVISED 01/14

McCORMICK TAYLOR
509 South Exeter Street
4th Floor
Baltimore, Maryland 21202
(410) 662-7400

STORMWATER MANAGEMENT DETAILS

FRANKLIN KNOLLS-PHASE 3

SLIGO (13th) ELECTION DISTRICT

PARCEL X, SUBDIVISION X, LIBER X FOLIO X

MONTGOMERY COUNTY, MARYLAND

CLIENT: MONTGOMERY COUNTY DEPT OF ENVIRONMENTAL PROTECTION
255 ROCKVILLE PIKE, RM. 120
ROCKVILLE, MD 20850-4166
MR. PAUL BOGLE, P.E.
(240) 777-7757

DESIGN	KCS
DRAFT	WJW
APPROVED	HJD
DATE	JUNE 2015
SCALE	NOT TO SCALE

SHEET 7 OF 43

FILE: I:\5182I3 - Roadway LID - Forest Estates and the Four Corners Area\Design\Engineering\PlanSet\FK P3\p0E-0002_FK3.dgn
PLOTTED: Tuesday, June 02, 2015 AT 10:34 AM

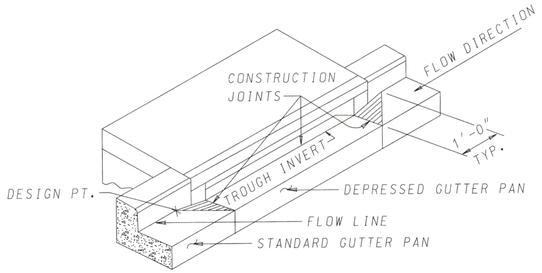

ISOMETRIC

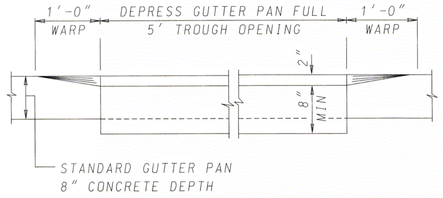

SECTION A–A
(SHOWN LOOKING TOWARD ROADWAY)

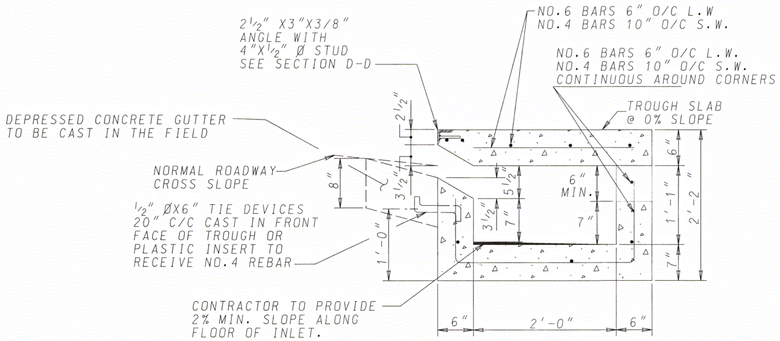

SECTION C–C
(MODIFIED MSHA STD. NO. MD 374.55-01)

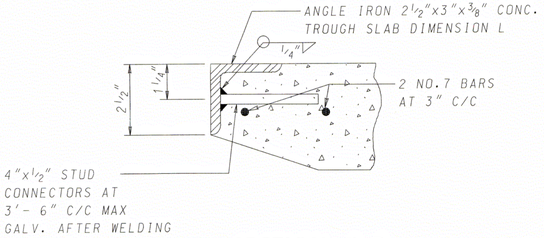

SECTION D–D

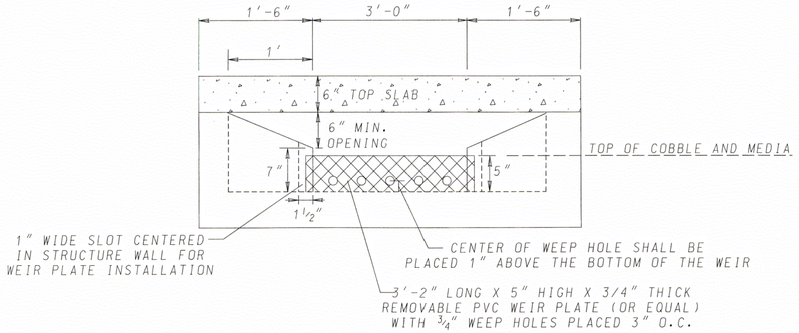

SECTION E–E
(SHOWN LOOKING TOWARD ROADWAY)

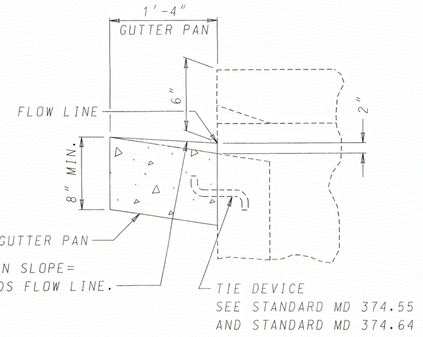

SECTION B–B

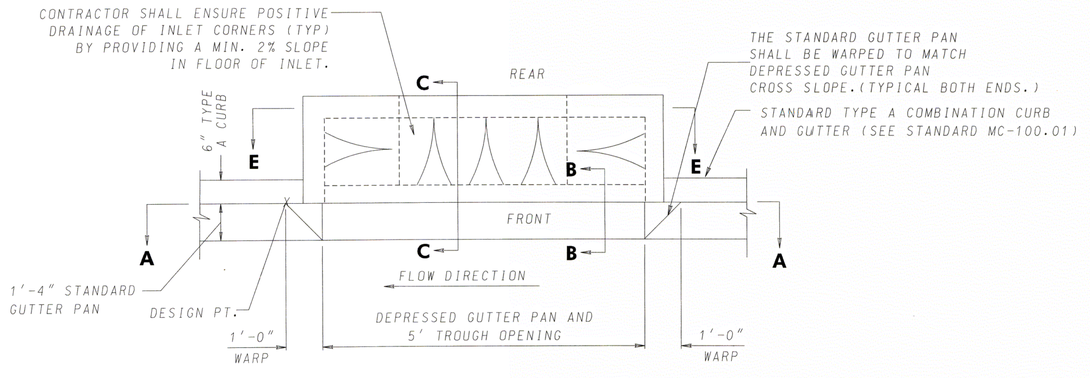

PLAN

WHENEVER STANDARD MC-101.01 CURB IS USED IN CONJUCTION WITH THIS STANDARD, A 10 FOOT TRANSITION SHALL BE PROVIDED FROM THE STANDARD MC-100.01 TO STANDARD MC-101.01 FOR CURB RETURNS AND CURB SECTIONS WHICH INCLUDES INLETS.

GENERAL NOTES:
1. REFER TO MARYLAND STATE HIGHWAY ADMINISTRATION FOR MATERIALS AND METHODS OF CONSTRUCTION.
2. CONTRACTOR MUST PROVIDE SHOP DRAWINGS AND SEALED COMPUTATIONS FOR THE CURB INLETS TO MONTGOMERY COUNTY DEP FOR APPROVAL.
3. CURB INLET SHALL BE H-20 LOAD RATED.
4. STATIONING, TC/TG AND INVERT ELEVATIONS SHOWN IN THE DRAINAGE STRUCTURE TABLES ARE TAKEN AT THE CENTER OF THE STRUCTURE, ALONG THE CURBLINE.
5. MODIFIED CURB OPENING INLET SHALL BE MEASURED AND PAID FOR AT THE CONTRACT UNIT PRICE PER CUBIC YARD OF MIX NO. 6 CONCRETE FOR MISCELLANEOUS STRUCTURES.

I/X MODIFIED CURB OPENING INLET DETAIL
NOT TO SCALE

DETAILS REVISED 01/14

McCORMICK TAYLOR
509 South Exeter Street
4th Floor
Baltimore, Maryland 21202
(410) 662-7400

STORMWATER MANAGEMENT DETAILS

FRANKLIN KNOLLS-PHASE 3
SLIGO (13th) ELECTION DISTRICT
PARCEL X, SUBDIVISION X, LIBER X FOLIO X
MONTGOMERY COUNTY, MARYLAND

CLIENT: MONTGOMERY COUNTY DEPT OF ENVIRONMENTAL PROTECTION
255 ROCKVILLE PIKE, RM. 120
ROCKVILLE, MD 20850-4166
MR. PAUL BOGLE, P.E.
(240) 777-7757

DESIGN	KCS	APPROVED	HJD	SCALE	NOT TO SCALE
DRAFT	WJW	DATE	JUNE 2015		

SHEET 8 OF 43

FILE: I:\15\15213 - Roadway, I.D. - Forest Estates and the Four Corners Area\Design\Engineering\Plan Set\FK P\pubDE-0005_FK3.dgn
PLOTTED: Tuesday, June 02, 2015 at 10:54 AM

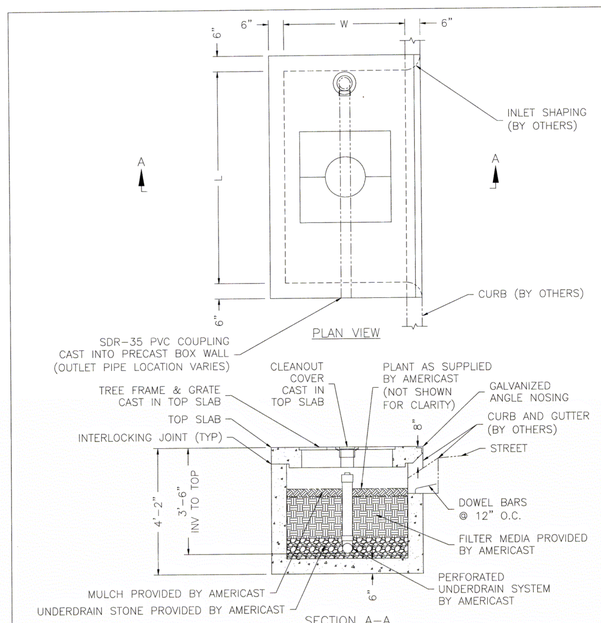

DESIGNATION	L	W	TREE GRATE QTY & SIZE	OUTLET PIPE
6 x 4	6'-0"	4'-0"	(1) 3x3	4" SDR-35 PVC
8 x 4	8'-0"	4'-0"	(1) 3x3	4" SDR-35 PVC
8 x 6	8'-0"	6'-0"	(1) 4x4	4" SDR-35 PVC
10 x 6	10'-0"	6'-0"	(1) 4x4	6" SDR-35 PVC
12 x 4	12'-0"	4'-0"	(2) 3x3	4" SDR-35 PVC
12 x 6	12'-0"	6'-0"	(2) 4x4	6" SDR-35 PVC
13 x 7	13'-0"	7'-0"	(2) 4x4	6" SDR-35 PVC

MODIFICATIONS OF DRAWINGS ARE ONLY PERMITTED BY WRITTEN AUTHORIZATION FROM FILTERRA

DRAWING AVAILABLE IN TIF FILE FORMAT.

AMERICAST®

Copyright © 2007 by Americast

DATE: 09-04-07 DWG: FTNW-3

PRECAST FILTERRA® UNIT NARROW WIDTH CONFIGURATION

filterra®

US PAT 6,277,274 AND 6,569,321

GENERAL NOTES:
1. CONTRACTOR TO PERFORM ALL WORK AS SHOWN 'BY OTHERS'.
2. CONTRACTOR IS RESPONSIBLE FOR ENSURING THAT SUPPLIER FULFILLS SPECIFIED RESPONSIBILITIES AND PERFORMS SPECIFIED DUTIES.

FILTERRA STANDARD NOTES

CONSTRUCTION AND INSTALLATION

A. EACH UNIT SHALL BE CONSTRUCTED AT THE LOCATIONS AND ELEVATIONS ACCORDING TO THE SIZES SHOWN ON THE APPROVED DRAWINGS.

B. IF THE FILTERRA IS STORED BEFORE INSTALLATION, THE TOP SLAB MUST BE PLACED ON THE BOX USING THE 2x4 WOOD PROVIDED, TO PREVENT ANY CONTAMINATION FROM THE SITE. ALL INTERNAL FITTINGS SUPPLIED (IF ANY), MUST BE LEFT IN PLACE AS PER THE DELIVERY.

C. THE UNIT SHALL BE PLACED ON A COMPACTED SUB-GRADE WITH A MINIMUM OF 6-INCH GRAVEL BASE MATCHING THE FINAL GRADE OF THE CURB LINE IN THE AREA OF THE UNIT. THE UNIT IS TO BE PLACED SUCH THAT THE UNIT AND TOP SLAB MATCH THE GRADE OF THE CURB IN THE AREA OF THE UNIT. COMPACT UNDISTURBED SUB-GRADE MATERIALS TO 95% OF MAXIMUM DENSITY AT +I-2% OF OPTIMUM MOISTURE. UNSUITABLE MATERIAL BELOW SUB-GRADE SHALL BE REPLACED TO THE SITE ENGINEER'S APPROVAL.

D. OUTLET CONNECTIONS SHALL BE ALIGNED AND SEALED TO MEET THE APPROVED DRAWINGS WITH MODIFICATIONS NECESSARY TO MEET SITE CONDITIONS AND LOCAL REGULATIONS.

E. ONCE THE UNIT IS SET, THE INTERNAL WOODEN FORMS AND PROTECTIVE MESH COVER MUST BE LEFT INTACT. REMOVE ONLY THE TEMPORARY WOODEN SHIPPING BLOCKS BETWEEN THE BOX AND TOP SLAB. THE TOP LID SHOULD BE SEALED ONTO THE BOX SECTION BEFORE BACKFILLING, USING A NON-SHRINK GROUT, BUTYL RUBBER OR SIMILAR WATERPROOF SEAL. THE BOARDS ON TOP OF THE LID AND BOARDS SEALED IN THE UNIT'S THROAT MUST NOT BE REMOVED. THE SUPPLIER (AMERICAST OR ITS AUTHORIZED DEALER) WILL REMOVE THESE SECTIONS AT THE TIME OF ACTIVATION. BACKFILLING SHOULD BE PERFORMED IN A CAREFUL MANNER, BRINGING THE APPROPRIATE FILL MATERIAL UP IN 6" LIFTS ON ALL SIDES. PRECAST SECTIONS SHALL BE SET IN A MANNER THAT WILL RESULT IN A WATERTIGHT JOINT. IN ALL INSTANCES, INSTALLATION OF FILTERRA UNIT SHALL CONFORM TO ASTM SPECIFICATION C891 "STANDARD PRACTICE FOR INSTALLATION OF UNDERGROUND PRECAST UTILITY STRUCTURES", UNLESS DIRECTED OTHERWISE IN CONTRACT DOCUMENTS.

F. THE CONTRACTOR IS RESPONSIBLE FOR INLET PROTECTION/SEDIMENT CONTROL AND CLEANING AROUND EACH FILTERRA UNIT.

G. CURB AND GUTTER CONSTRUCTION (WHERE PRESENT) SHALL ENSURE THAT THE FLOW-LINE OF THE FILTERRA UNIT IS AT A GREATER ELEVATION THAN THE FLOW LINE OF THE BYPASS STRUCTURE OR RELIEF (DROP INLET, CURB CUT OR SIMILAR). FAILURE TO COMPLY WITH THIS GUIDELINES MAY CAUSE FAILURE AND/OR DAMAGE TO THE FILTERRA ENVIRONMENTAL DEVICE.

H. EACH FILTERRA UNIT MUST RECEIVE ADEQUATE IRRIGATION TO ENSURE SURVIVAL OF THE LIVING SYSTEM DURING PERIODS OF DRIER WEATHER. THIS MAY BE ACHIEVED THROUGH A PIPED SYSTEM, GUTTER FLOW OR THROUGH THE TREE GRATE.

ACTIVATION

A. ACTIVATION OF THE FILTERRA UNIT IS PERFORMED ONLY BY THE SUPPLIER. PURCHASER IS RESPONSIBLE FOR FILTERRA INLET PROTECTION AND SUBSEQUENT CLEAN OUT COST. THIS PROCESS CANNOT COMMENCE UNTIL THE PROJECT SITE IS FULLY STABILIZED AND CLEANED (FULL LANDSCAPING, GRASS COVER, FINAL PAVING AND STREET SWEEPING COMPLETED), NEGATING THE CHANGE OF CONSTRUCTION MATERIALS CONTAMINATING THE FILTERRA SYSTEM. CARE SHALL BE TAKEN DURING CONSTRUCTION NOT TO DAMAGE THE PROTECTIVE THROAT AND TOP PLATES.

B. ACTIVATION INCLUDES INSTALLATION OF PLANT(S) AND MULCH LAYERS AS NECESSARY.

INCLUDED MAINTENANCE

A. EACH CORRECTLY INSTALLED FILTERRA UNIT IS TO BE MAINTAINED BY THE SUPPLIER OR A SUPPLIER APPROVED CONTRACTOR FOR A MINIMUM PERIOD OF I YEAR. THE COST OF THIS SERVICE IS TO BE INCLUDED IN THE PRICE OF EACH FILTERRA UNIT.

B. ANNUAL INCLUDED MAINTENANCE CONSISTS OF A MAXIMUM OF (2) SCHEDULED VISITS. THE VISITS AREA SCHEDULED SEASONALLY; THE SPRING VISIT AIMS TO CLEAN UP AFTER WINTER LOADS THAT MAY INCLUDE SALTS AND SANDS. THE FALL VISIT HELPS THE SYSTEM BY REMOVING EXCESSIVE LEAF LITTER.

C. EACH INCLUDED MAINTENANCE VISIT CONSISTS OF THE FOLLOWING TASKS:
1. FILTERRA UNIT INSPECTION
2. FOREIGN DEBRIS, SILT, MULCH AND TRASH REMOVAL
3. FILTER MEDIA EVALUATION AND RECHARGE AS NECESSARY
4. PLANT HEALTH EVALUATION AND PRUNING OR REPLACEMENT AS NECESSARY
5. REPLACEMENT OF MULCH
6. DISPOSAL OF ALL MAINTENANCE REFUSE ITEMS
7. MAINTENANCE RECORDS UPDATED AND STORED (REPORTS AVAILABLE UPON REQUEST)

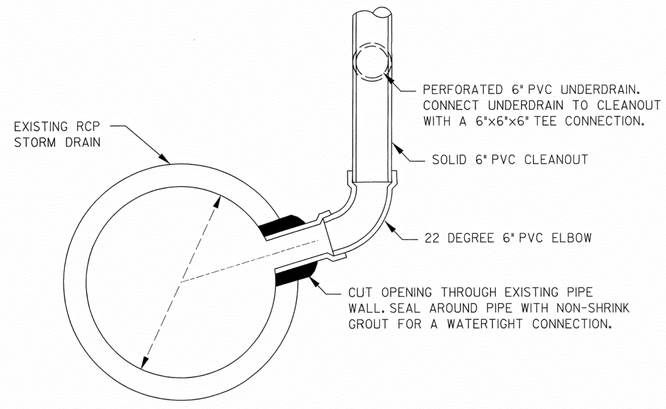

NOTE:
REFER TO PLAN SHEETS FOR ELEVATION OF PIPE CONNECTION. CONNECTION SHOULD BE ABOVE THE FLOWLINE OF THE EXISITNG RCP STORM DRAIN.

UNDERDRAIN TO EX. PIPE CONNECTION DETAIL

N.T.S.

McCORMICK TAYLOR
509 South Exeter Street
4th Floor
Baltimore, Maryland 21202
(410) 662-7400

STORMWATER MANAGEMENT DETAILS

FRANKLIN KNOLLS-PHASE 3

SLIGO (13th) ELECTION DISTRICT

PARCEL X, SUBDIVISION X, LIBER X FOLIO X

MONTGOMERY COUNTY, MARYLAND

CLIENT: MONTGOMERY COUNTY DEPT OF ENVIRONMENTAL PROTECTION
255 ROCKVILLE PIKE, RM. 120
ROCKVILLE, MD 20850-4166
MR. PAUL BOGLE, P.E.
(240) 777-7757

DESIGN	KCS
DRAFT	WJW
APPROVED	HJD
DATE	JUNE 2015
SCALE	NOT TO SCALE

SHEET 9 OF 43

FILE: I:\5182\13 - Rockrey LID - Forest Estates and the Four Corners Area\Design\Engineering\PlanSet\FK P3\p0E-0004_FK3.dgn
PLOTTED: Tuesday, June 02, 2015 AT 10:34 AM

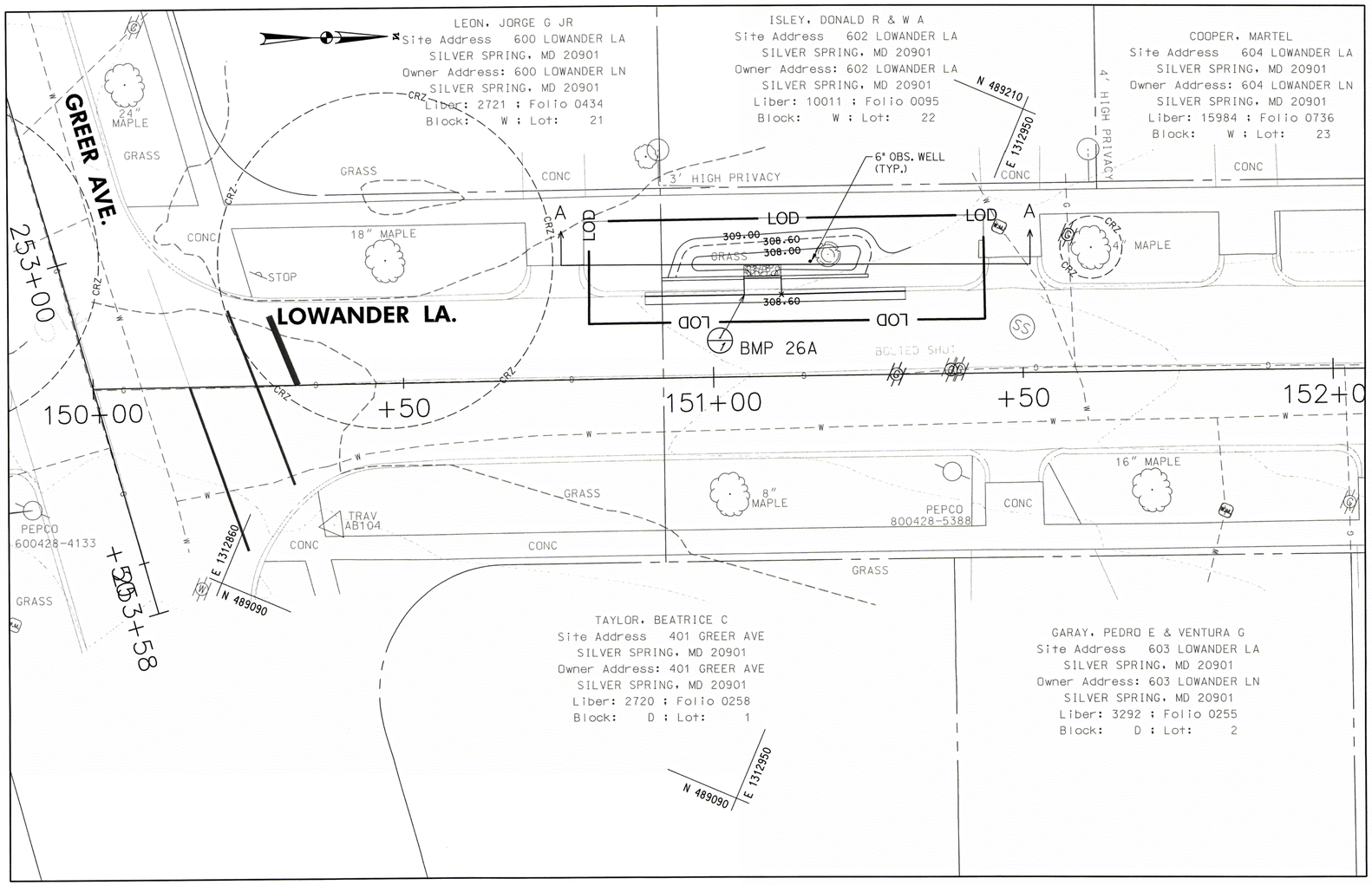

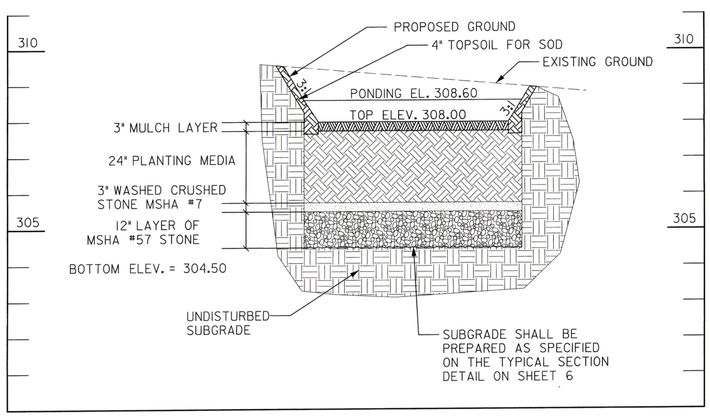

PROFILE (A-A) - RAIN GARDEN FACILITY (BMP 26A)

SCALE: HORIZ. 1"=10'
VERT. 1"=2'

AS-BUILT DATA FOR FILTERS (BIORETENTION/RAIN GARDENS)

*TO BE COMPLETED BY THE CERTIFYING ENGINEER

TYPE OF FACILITY: RAIN GARDEN **BMP ID:** BMP 26A

FEATURE	DESIGN	*AS-BUILT
DRAINAGE AREA (AC)	0.13	
TOTAL IMPERVIOUS AREA (AC)	0.06	
TREATMENT VOLUME PROVIDED (CF)	212	
TARGET WQv TREATMENT VOLUME (CF)	220	
FILTER BED AREA (SF) [1]	84	
FILTER BED SURFACE ELEVATION	308.00	
DESIGN POINT/MAX. PONDING ELEVATION	308.60	
PONDED WATER SURFACE ELEVATION AREA (SF) [2]	170	
OUTLET PIPE (UNDERDRAIN) SIZE / INVERT ELEV.		
THICKNESS OF FILTER MEDIA	REFER TO PROFILE	
PLACEMENT OF GEOTEXTILE (SIDES ONLY)	REFER TO FACILITY TYP. SECTION - SHEET 6	
PLANTINGS	REFER TO LANDSCAPE PLAN - SHEET 43	
COMPOSITION OF FILTER MEDIA	REFER TO MCDEP SPECIFICATIONS	

*NOTES:
1. "FILTER BED AREA (SF)" REPRESENTS THE EXPOSED SURFACE AREA AT THE PROPOSED "FILTER BED SURFACE ELEVATION".
2. FOR MATERIAL QUANTITY ESTIMATIONS, THE PLANTING MEDIA, STONE, MULCH, ETC. SHOULD BE BASED ON THE AREA OF "PONDED WATER SURFACE ELEVATION AREA (SF)".
3. CONTRACTOR SHALL TEST PIT UTILITIES PRIOR TO CONSTRUCTION. IF UTILITY IS UNAVOIDABLE, CONTRACTOR SHALL REFER TO SHEET 6 FOR UTILITY CROSSING DETAIL WITHIN THE FACILITY.

DRAINAGE STRUCTURE SCHEDULE

NO	STATION / OFFSET	TC / TG	INV. OUT	REMARKS
OW-260	151+15.9, 18.4' LT	-	-	OBSERVATION WELL
I-1	151+08.2, 13.2' LT	309.10	284.30	MODIFIED CURB INLET

COMBINATION CONC. CURB AND GUTTER

STA. TO STA.	L.F.	REMARKS
150+89, LT TO 150+99, LT	10	TRANSITION TYPE C TO TYPE A
150+99, LT TO 151+05 LT	6	TYPE A, MC.101.01
151+11, LT TO 151+21, LT	10	TYPE A, MC.101.01
151+21, LT TO 151+31, LT	10	TRANSITION TYPE A TO TYPE C

CONCRETE EDGING

FROM		TO		QTY
STA	ELEV	STA	ELEV	LF
150+91.90	309.30	151+05.17	309.20	13.3
151+11.17	309.10	151+25.21	308.80	13.8

10' 0 10' 20'
SCALE: 1"=10'

McCORMICK TAYLOR
509 South Exeter Street
4th Floor
Baltimore, Maryland 21202
(410) 662-7400

PLAN AND PROFILE - BMP 26A

FRANKLIN KNOLLS-PHASE 3

SLIGO (13th) ELECTION DISTRICT
PARCEL X, SUBDIVISION X, LIBER X FOLIO X
MONTGOMERY COUNTY, MARYLAND

CLIENT: MONTGOMERY COUNTY DEPT OF ENVIRONMENTAL PROTECTION
255 ROCKVILLE PIKE, RM. 120
ROCKVILLE, MD 20850-4166
MR. PAUL BOGLE, P.E.
(240) 777-7757

DESIGN	KCS	SCALE	1"=10'
DRAFT	WJW	DATE	JUNE 2015
APPROVED	HJD		

SHEET 10 OF 43

FILE: I:\5182513 - Rowley LID - Forest Edition and the Four Corners Area\Design\Engineering\PlanSet\FK P3\pd-P015_FK3_BMP-26A.dgn
PLOTTED: Tuesday, June 02, 2015 AT 10:34 AM

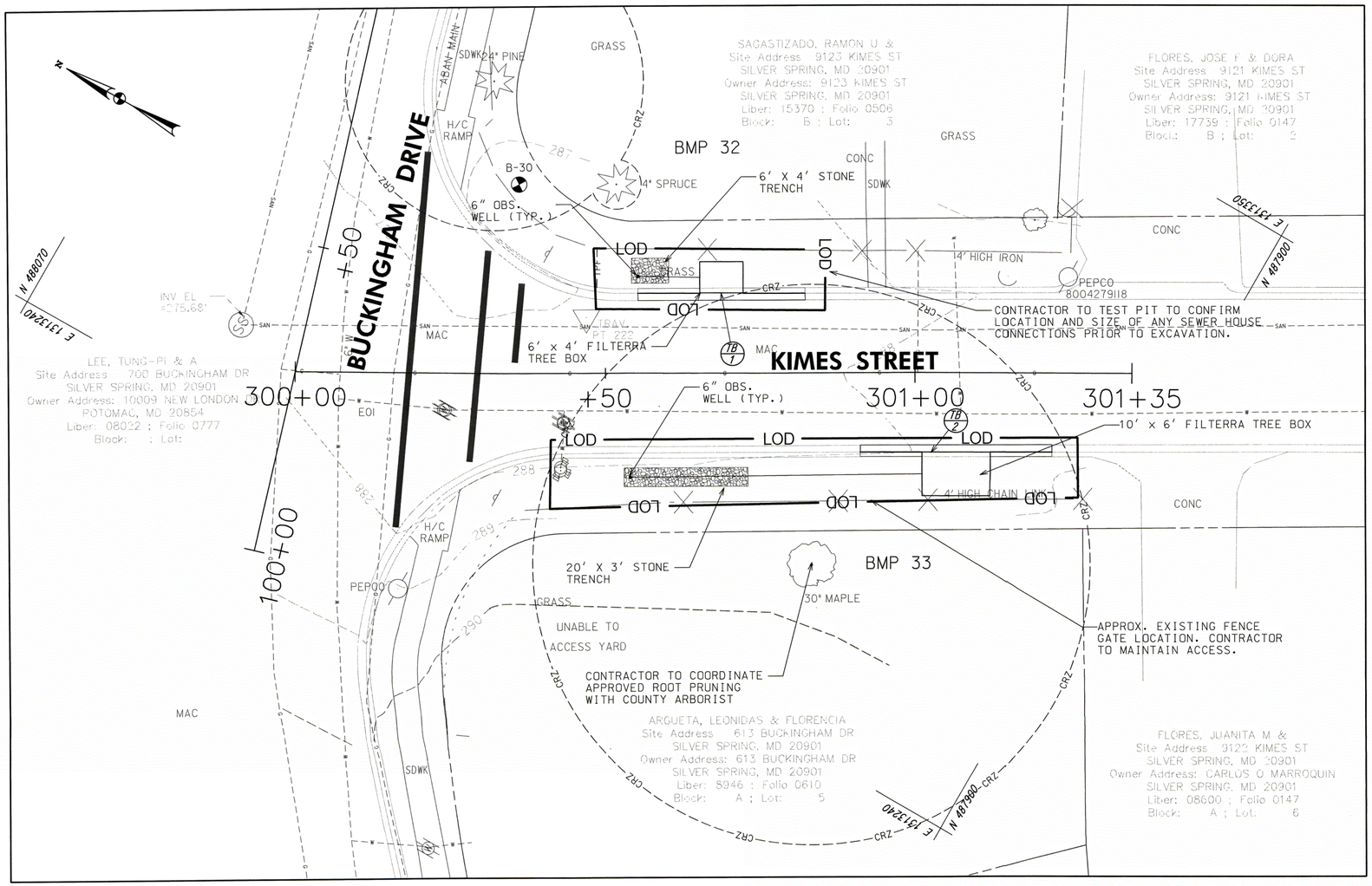

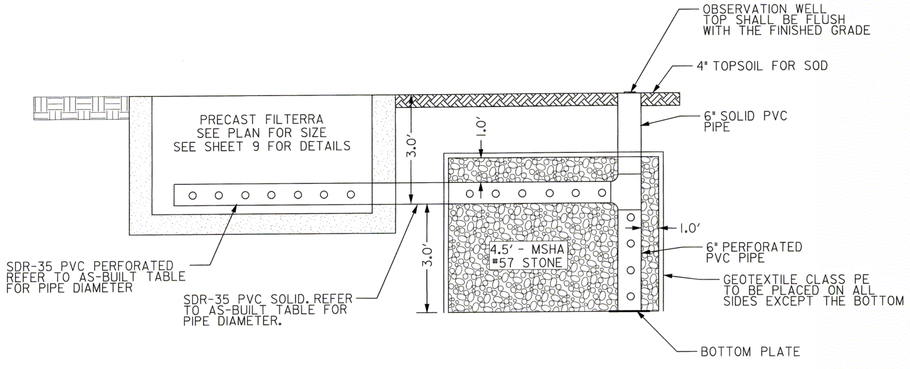

TYPICAL FILTERRA AND STONE TRENCH DETAIL

NOT TO SCALE

AS-BUILT DATA FOR TREE BOX FILTERS *TO BE COMPLETED BY THE CERTIFYING ENGINEER		
	BMP ID: 32	
FEATURE	DESIGN	**AS-BUILT
DRAINAGE AREA (AC)	0.08	
TOTAL IMPERVIOUS AREA (AC)	0.05	
FILTER BOX DIMENSIONS (L x W)	4' X 6'	
TOP OF STRUCTURE ELEVATION	287.80	
OUTLET PIPE (UNDERDRAIN) SIZE / INVERT ELEV.	4" / 284.30	
THICKNESS OF FILTER MEDIA	REFER TO FACILITY TYP. SECTION – SHEET 9	
PLANTINGS	REFER TO LANDSCAPE PLAN – SHEET 43	
COMPOSITION & DEPTH OF FILTER MEDIA	REFER TO MANUFACTURER SPECIFICATIONS	

AS-BUILT DATA FOR TREE BOX FILTERS/FILTERRA SYSTEM *TO BE COMPLETED BY THE CERTIFYING ENGINEER		
	BMP ID: 33	
FEATURE	DESIGN	**AS-BUILT
DRAINAGE AREA (AC)	1.04	
TOTAL IMPERVIOUS AREA (AC)	0.21	
FILTER BOX DIMENSIONS (L x W)	10' X 6'	
TOP OF STRUCTURE ELEVATION	288.50	
OUTLET PIPE (UNDERDRAIN) SIZE / INVERT ELEV.	6" / 285.00	
THICKNESS OF FILTER MEDIA	REFER TO FACILITY TYP. SECTION – SHEET 9	
PLANTINGS	REFER TO LANDSCAPE PLAN – SHEET 43	
COMPOSITION & DEPTH OF FILTER MEDIA	REFER TO MANUFACTURER SPECIFICATIONS	

COMBINATION CONC. CURB AND GUTTER		
STA. TO STA.	L.F.	REMARKS
300+55, LT TO 300+65, LT	10	TRANSITION TYPE C TO TYPE A
300+72, LT TO 300+82, LT	10	TRANSITION TYPE A TO TYPE C
300+91, RT TO 301+01, RT	10	TRANSITION TYPE C TO TYPE A
301+12, RT TO 301+22, RT	10	TRANSITION TYPE A TO TYPE C

DRAINAGE STRUCTURE SCHEDULE				
NO	STATION / OFFSET	TC / TG	INV. OUT	REMARKS
OW-320	300+55.2, 15.6' LT	-	-	OBSERVATION WELL
TB-1	300+68.7, 12.9' LT	287.80	284.30	TREE BOX/FILTERRA
OW-330	300+54.0, 15.6' RT	-	-	OBSERVATION WELL
TB-2	301+06.6, 12.9' RT	288.50	285.00	TREE BOX/FILTERRA

PIPE SCHEDULE				
FROM	TO	SIZE (IN)	TYPE	LENGTH (LF)
300+55.2	300+65.2	4	PVC	10
300+54.0	301+01.2	6	PVC	47

10' 0 10' 20'

SCALE: 1"=10'

McCORMICK TAYLOR
509 South Exeter Street
4th Floor
Baltimore, Maryland 21202
(410) 662-7400

PLAN AND PROFILE - BMP s 32 AND 33

FRANKLIN KNOLLS-PHASE 3

SLIGO (13th) ELECTION DISTRICT

PARCEL X, SUBDIVISION X, LIBER X FOLIO X

MONTGOMERY COUNTY, MARYLAND

CLIENT: MONTGOMERY COUNTY DEPT OF ENVIRONMENTAL PROTECTION
255 ROCKVILLE PIKE, RM. 120
ROCKVILLE, MD 20850-4166
MR. PAUL BOGLE, P.E.
(240) 777-7757

DESIGN	KCS
DRAFT	WJW
APPROVED	H.D
DATE	JUNE 2015
SCALE	1"=10'

SHEET 11 OF 43

FILE: I:\516213 - Roadway LID – Forest Estates and the Four Corners Area\Design\Engineering\PlanSet\FK P3pltD-P002_PKG_BMP-32_33.dgn
PLOTTED: Tuesday, June 02, 2015 AT 10:35 AM

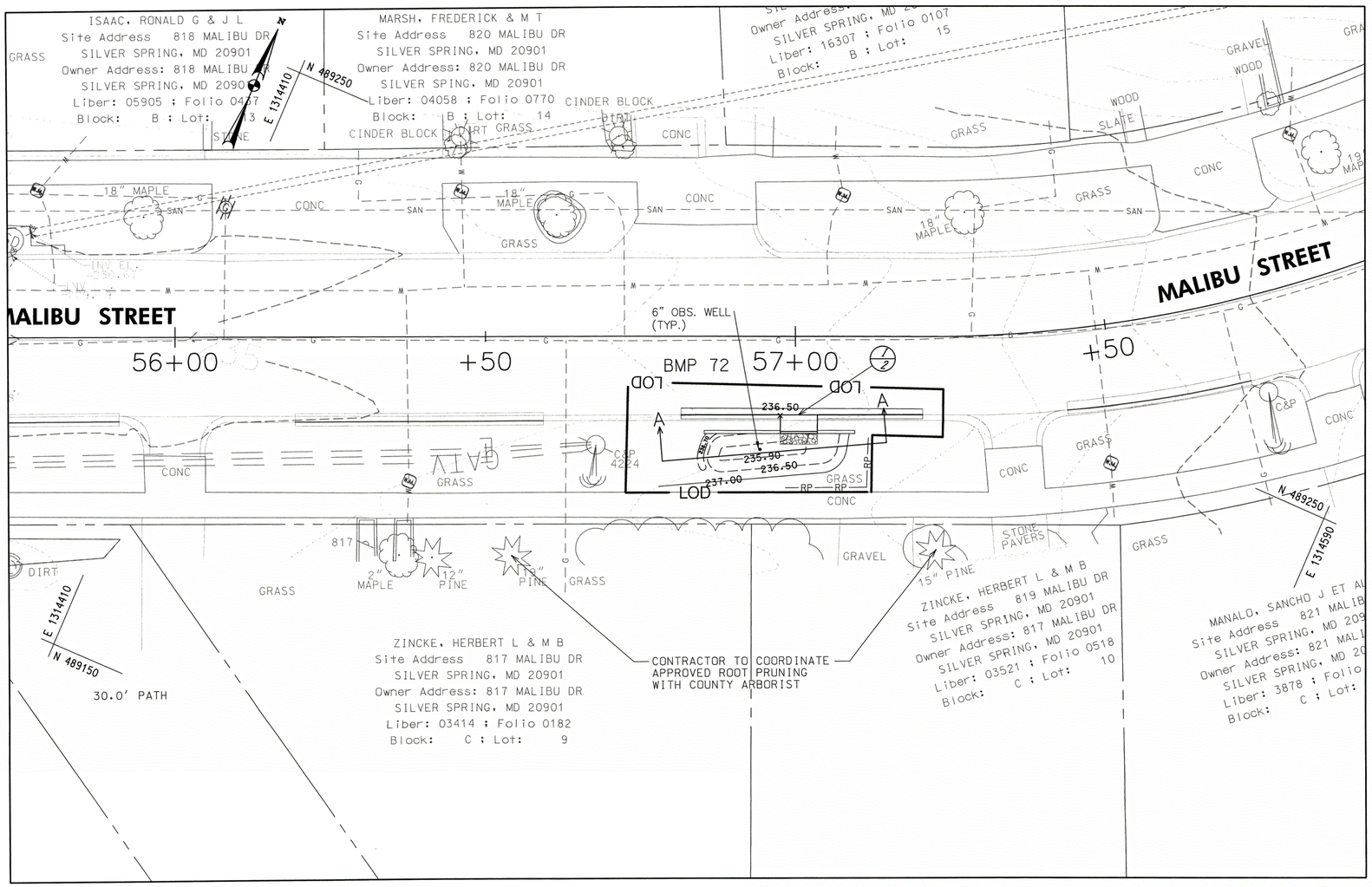

AS-BUILT DATA FOR FILTERS (BIORETENTION/RAIN GARDENS)

*TO BE COMPLETED BY THE CERTIFYING ENGINEER

TYPE OF FACILITY: RAIN GARDEN BMP ID: BMP 72

FEATURE	DESIGN	*AS-BUILT
DRAINAGE AREA (AC)	0.61	
TOTAL IMPERVIOUS AREA (AC)	0.28	
TREATMENT VOLUME PROVIDED (CF)	129	
TARGET WQv TREATMENT VOLUME (CF)	1,025	
FILTER BED AREA (SF) [1]	34	
FILTER BED SURFACE ELEVATION	235.90	
DESIGN POINT/MAX. PONDING ELEVATION	236.50	
PONDED WATER SURFACE ELEVATION AREA (SF) [2]	108	
OUTLET PIPE (UNDERDRAIN) SIZE / INVERT ELEV.		
THICKNESS OF FILTER MEDIA	REFER TO PROFILE	
PLACEMENT OF GEOTEXTILE (SIDES ONLY)	REFER TO FACILITY TYP. SECTION – SHEET 6	
PLANTINGS	REFER TO LANDSCAPE PLAN – SHEET 43	
COMPOSITION OF FILTER MEDIA	REFER TO MCDEP SPECIFICATIONS	

*NOTES:
1. "FILTER BED AREA (SF)" REPRESENTS THE EXPOSED SURFACE AREA AT THE PROPOSED "FILTER BED SURFACE ELEVATION".
2. FOR MATERIAL QUANTITY ESTIMATIONS, THE PLANTING MEDIA, STONE, MULCH, ETC. SHOULD BE BASED ON THE AREA OF "PONDED WATER SURFACE ELEVATION AREA (SF)".
3. CONTRACTOR SHALL TEST PIT UTILITIES PRIOR TO CONSTRUCTION. IF UTILITY IS UNAVOIDABLE, CONTRACTOR SHALL REFER TO SHEET 6 FOR UTILITY CROSSING DETAIL WITHIN THE FACILITY.

COMBINATION CONC. CURB AND GUTTER		
STA. TO STA.	L.F.	REMARKS
56+82, RT TO 56+92, RT	10	TRANSITION TYPE C TO TYPE A
56+92, RT TO 56+98, RT	6	TYPE A, MC.101.01
57+04, RT TO 57+11, RT	7	TYPE A, MC.101.01
57+11, RT TO 57+21, RT	10	TRANSITION TYPE A TO TYPE C

DRAINAGE STRUCTURE SCHEDULE				
NO	STATION / OFFSET	TC/TG	INV. OUT	REMARKS
OW-720	56+94.3, 18.2' RT	-	-	OBSERVATION WELL
I-2	57+00.6, 12.6' RT	237	235.42	MODIFIED CURB INLET

CONCRETE EDGING				
FROM		TO		QTY
STA	ELEV	STA	ELEV	LF
56+85.30	236.70	56+97.55	237.00	12.3
57+03.55	237.20	57+09.58	237.30	6.0

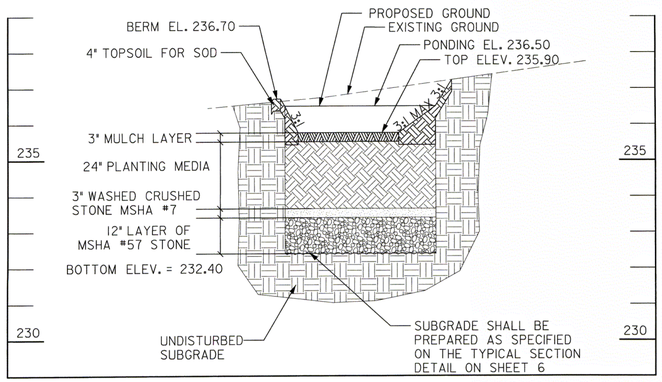

PROFILE (A-A) - RAIN GARDEN FACILITY (BMP 72)

SCALE: HORIZ. 1"=10'
VERT. 1"=2'

10' 0 10' 20'
SCALE: 1"=10'

McCORMICK TAYLOR
509 South Exeter Street
4th Floor
Baltimore, Maryland 21202
(410) 662-7400

PLAN AND PROFILE - BMP 72

FRANKLIN KNOLLS-PHASE 3

SLIGO (13th) ELECTION DISTRICT

PARCEL X, SUBDIVISION X, LIBER X FOLIO X

MONTGOMERY COUNTY, MARYLAND

CLIENT: MONTGOMERY COUNTY DEPT OF ENVIRONMENTAL PROTECTION
255 ROCKVILLE PIKE, RM. 120
ROCKVILLE, MD 20850-4166
MR. PAUL BOGLE, P.E.
(240) 777-7757

DESIGN	KCS
DRAFT	WJW
APPROVED	HJD
DATE	JUNE 2015
SCALE	1"=10'

SHEET 12 OF 43

FILE: I:\5182\13 - Roadway, LID - Forest Estates and the Four Corners Area\Design\Engineering\Plan Set\FK PS\pHD-P004_FK3_BMP-71_72.dgn
PLOTTED: Tuesday, June 02, 2015 AT 10:35 AM

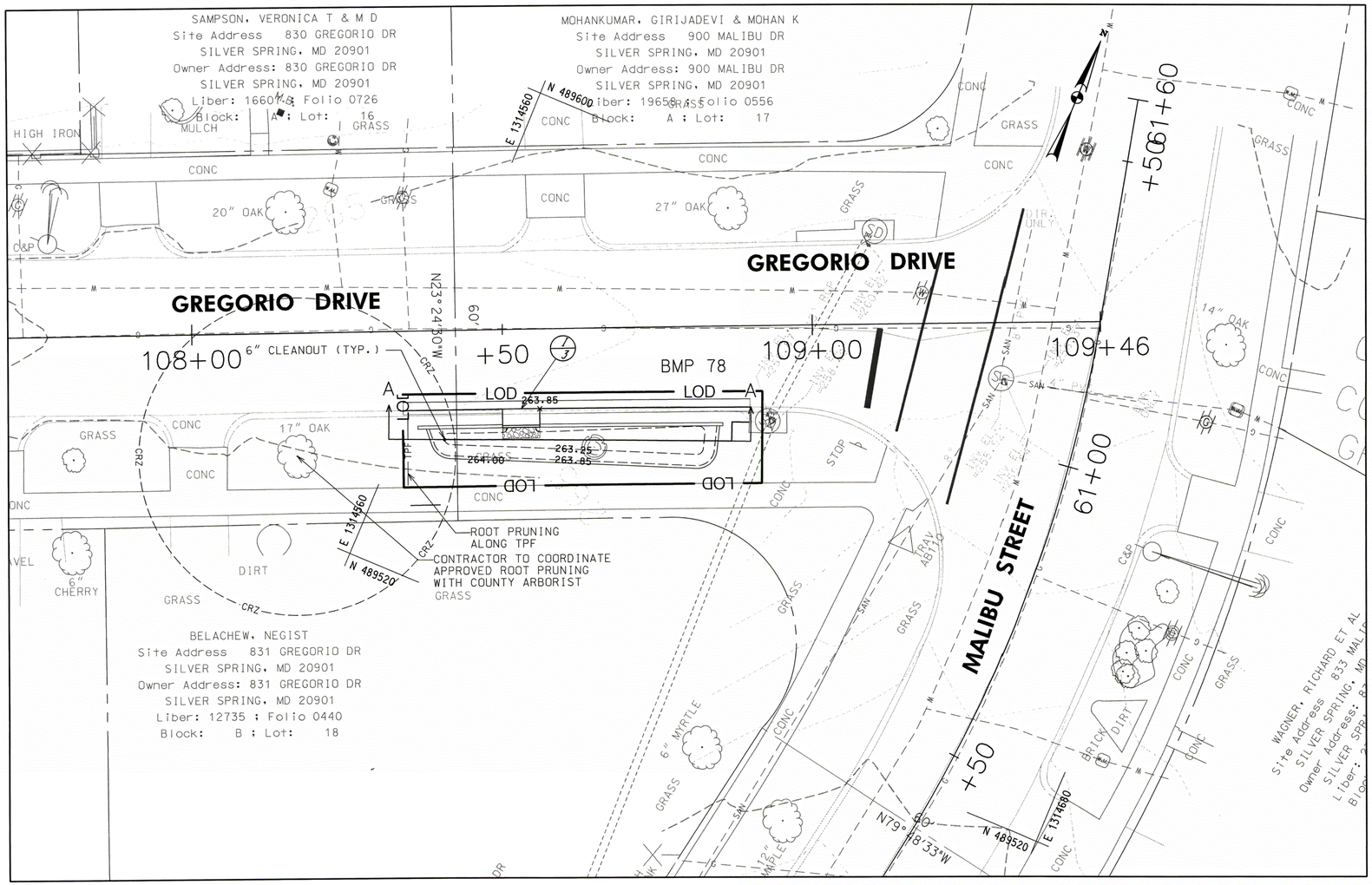

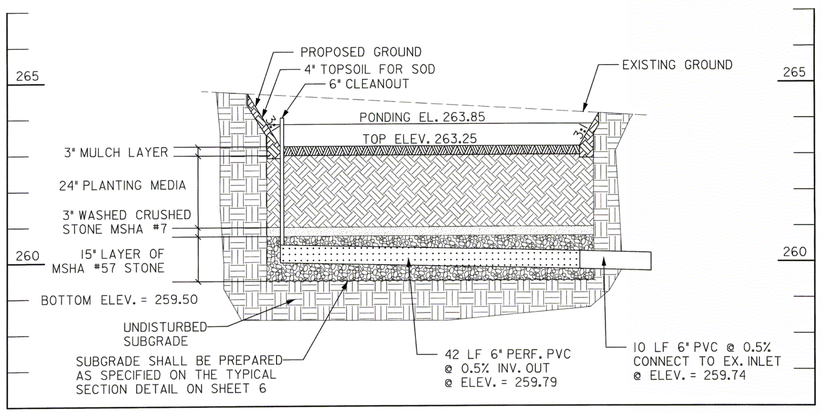

PROFILE (A-A) - BIORETENTION FACILITY (BMP 78)

SCALE: HORIZ. 1"=10'
VERT. 1"=2'

AS-BUILT DATA FOR FILTERS (BIORETENTION/RAIN GARDENS)

*TO BE COMPLETED BY THE CERTIFYING ENGINEER

TYPE OF FACILITY: BIORETENTION BMP ID: BMP 78

FEATURE	DESIGN	*AS-BUILT
DRAINAGE AREA (AC)	0.15	
TOTAL IMPERVIOUS AREA (AC)	0.08	
TREATMENT VOLUME PROVIDED (CF)	307	
TARGET WQv TREATMENT VOLUME (CF)	289	
FILTER BED AREA (SF) [1]	132	
FILTER BED SURFACE ELEVATION	263.25	
DESIGN POINT/MAX. PONDING ELEVATION	263.85	
PONDED WATER SURFACE ELEVATION AREA (SF) [2]	243	
OUTLET PIPE (UNDERDRAIN) SIZE / INVERT ELEV.	6" / 259.79	
THICKNESS OF FILTER MEDIA	REFER TO PROFILE	
PLACEMENT OF GEOTEXTILE (SIDES ONLY)	REFER TO FACILITY TYP. SECTION - SHEET 6	
PLANTINGS	REFER TO LANDSCAPE PLAN - SHEET 43	
COMPOSITION OF FILTER MEDIA	REFER TO MCDEP SPECIFICATIONS	

*NOTES:
1. "FILTER BED AREA (SF)" REPRESENTS THE EXPOSED SURFACE AREA AT THE PROPOSED "FILTER BED SURFACE ELEVATION".
2. FOR MATERIAL QUANTITY ESTIMATIONS, THE PLANTING MEDIA, STONE, MULCH, ETC. SHOULD BE BASED ON THE AREA OF "PONDED WATER SURFACE ELEVATION AREA (SF)".
3. CONTRACTOR SHALL TEST PIT UTILITIES PRIOR TO CONSTRUCTION. IF UTILITY IS UNAVOIDABLE, CONTRACTOR SHALL REFER TO SHEET 6 FOR UTILITY CROSSING DETAIL WITHIN THE FACILITY.

COMBINATION CONC. CURB AND GUTTER		
STA. TO STA.	L.F.	REMARKS
108+34, RT TO 108+44, RT	10	TRANSITION TYPE C TO TYPE A
108+44, RT TO 108+50, RT	6	TYPE A, MC.101.01
108+56, RT TO 108+90, RT	34	TYPE A, MC.101.01

DRAINAGE STRUCTURE SCHEDULE				
NO	STATION / OFFSET	TC/TG	INV. OUT	REMARKS
I-3	108+52.8, 12.8' RT	264.35	262.77	MODIFIED CURB INLET
CO-780	108+40.4, 17.5' RT	-	-	CLEANOUT

PIPE SCHEDULE				
FROM	TO	SIZE (IN)	TYPE	LENGTH (LF)
108+40.4	108+82.3	6	PERF. PVC	42
108+82.3	108+89.6	6	PVC	10

CONCRETE EDGING				
FROM		TO		QTY
STA	ELEV	STA	ELEV	LF
108+36.16	264.35	108+49.84	264.35	13.7
108+55.84	264.35	108+85.36	264.05	29.5

10' 0 10' 20'
SCALE: 1"=10'

McCORMICK TAYLOR
509 South Exeter Street
4th Floor
Baltimore, Maryland 21202
(410) 662-7400

PLAN AND PROFILE - BMP 78

FRANKLIN KNOLLS-PHASE 3

SLIGO (13th) ELECTION DISTRICT
PARCEL X, SUBDIVISION X, LIBER X FOLIO X
MONTGOMERY COUNTY, MARYLAND

CLIENT: MONTGOMERY COUNTY DEPT OF ENVIRONMENTAL PROTECTION
255 ROCKVILLE PIKE, RM. 120
ROCKVILLE, MD 20850-4166
MR. PAUL BOGLE, P.E.
(240) 777-7757

DESIGN	KCS		
DRAFT	WJW		
APPROVED	HJD		
DATE	JUNE 2015		
SCALE	1"=10'		

SHEET 13 OF 43

FILE: I:\15\13-Roadway LID - Forest Estates and the Four Corners Area\Design\Engineering\PlanSet\FK P3\pltID-PD07_PKG_BMP-78.dgn
PLOTTED: Tuesday, June 02, 2015 AT 10:33 AM

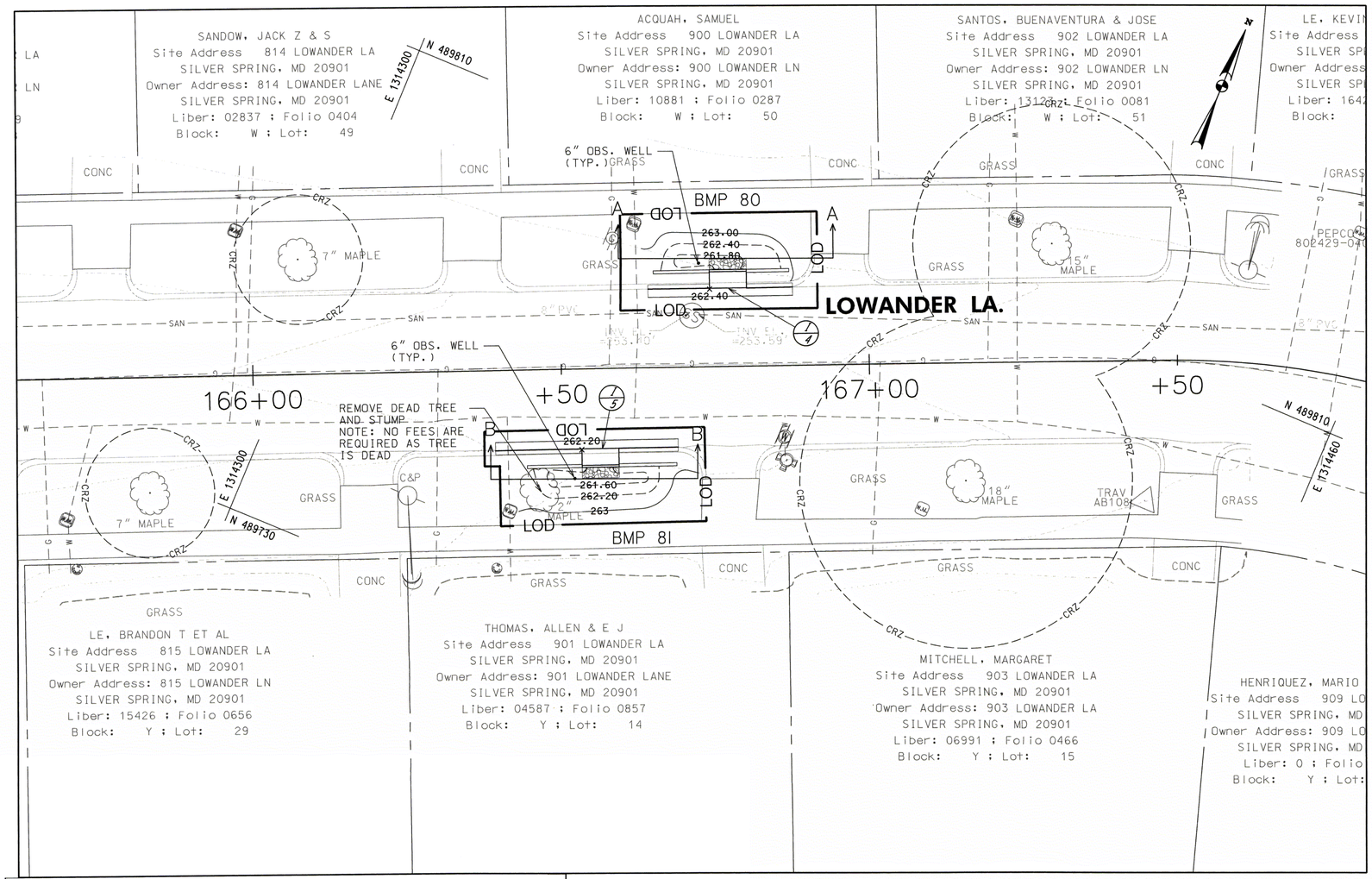

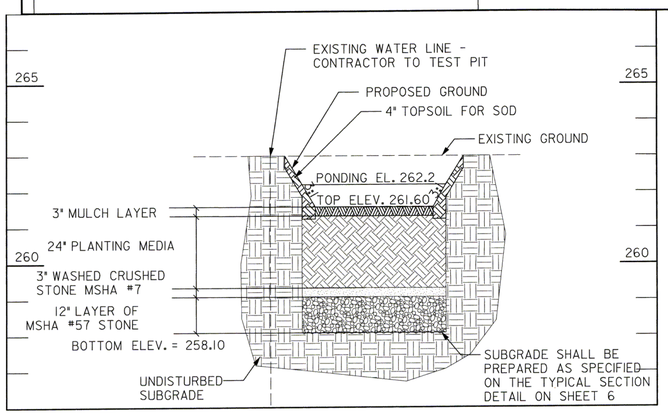

PROFILE (B-B) - RAIN GARDEN FACILITY (BMP 81)

SCALE: HORIZ. 1"=10'
VERT. 1"=2'

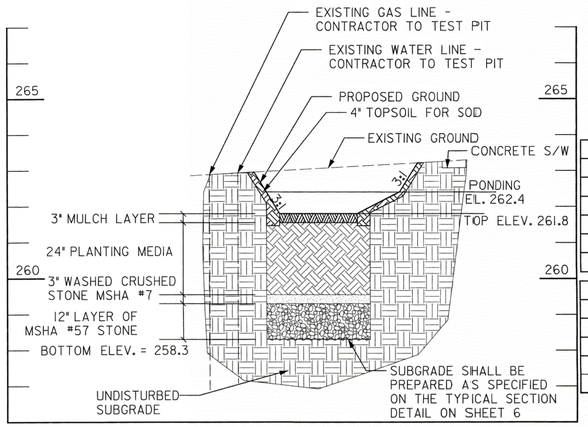

PROFILE (A-A) - RAIN GARDEN FACILITY (BMP 80)

SCALE: HORIZ. 1"=10'
VERT. 1"=2'

AS-BUILT DATA FOR FILTERS (BIORETENTION/RAIN GARDENS)

*TO BE COMPLETED BY THE CERTIFYING ENGINEER

TYPE OF FACILITY: RAIN GARDEN BMP ID: BMP 80

FEATURE	DESIGN	*AS-BUILT
DRAINAGE AREA (AC)	0.50	
TOTAL IMPERVIOUS AREA (AC)	0.22	
TREATMENT VOLUME PROVIDED (CF)	88	
TARGET WQv TREATMENT VOLUME (CF)	809	
FILTER BED AREA (SF) [1]	22	
FILTER BED SURFACE ELEVATION	261.80	
DESIGN POINT/MAX. PONDING ELEVATION	262.40	
PONDED WATER SURFACE ELEVATION AREA (SF) [2]	74	
OUTLET PIPE (UNDERDRAIN) SIZE / INVERT ELEV.		
THICKNESS OF FILTER MEDIA	REFER TO PROFILE	
PLACEMENT OF GEOTEXTILE (SIDES ONLY)	REFER TO FACILITY TYP. SECTION – SHEET 6	
PLANTINGS	REFER TO LANDSCAPE PLAN – SHEET 43	
COMPOSITION OF FILTER MEDIA	REFER TO MCDEP SPECIFICATIONS	

*NOTES:
1. "FILTER BED AREA (SF)" REPRESENTS THE EXPOSED SURFACE AREA AT THE PROPOSED "FILTER BED SURFACE ELEVATION".
2. FOR MATERIAL QUANTITY ESTIMATIONS, THE PLANTING MEDIA, STONE, MULCH, ETC. SHOULD BE BASED ON THE AREA OF "PONDED WATER SURFACE ELEVATION AREA (SF)".
3. CONTRACTOR SHALL TEST PIT UTILITIES PRIOR TO CONSTRUCTION. IF UTILITY IS UNAVOIDABLE, CONTRACTOR SHALL REFER TO SHEET 6 FOR UTILITY CROSSING DETAIL WITHIN THE FACILITY.

AS-BUILT DATA FOR FILTERS (BIORETENTION/RAIN GARDENS)

*TO BE COMPLETED BY THE CERTIFYING ENGINEER

TYPE OF FACILITY: RAIN GARDEN BMP ID: BMP 81

FEATURE	DESIGN	*AS-BUILT
DRAINAGE AREA (AC)	0.69	
TOTAL IMPERVIOUS AREA (AC)	0.27	
TREATMENT VOLUME PROVIDED (CF)	110	
TARGET WQv TREATMENT VOLUME (CF)	1,007	
FILTER BED AREA (SF) [1]	38	
FILTER BED SURFACE ELEVATION	261.60	
DESIGN POINT/MAX. PONDING ELEVATION	262.20	
PONDED WATER SURFACE ELEVATION AREA (SF) [2]	90	
OUTLET PIPE (UNDERDRAIN) SIZE / INVERT ELEV.		
THICKNESS OF FILTER MEDIA	REFER TO PROFILE	
PLACEMENT OF GEOTEXTILE (SIDES ONLY)	REFER TO FACILITY TYP. SECTION – SHEET 6	
PLANTINGS	REFER TO LANDSCAPE PLAN – SHEET 43	
COMPOSITION OF FILTER MEDIA	REFER TO MCDEP SPECIFICATIONS	

COMBINATION CONC. CURB AND GUTTER

STA. TO STA.	L.F.	REMARKS
166+39, RT TO 166+49, RT	10	TRANSITION TYPE C TO TYPE A
166+49, RT TO 166+53, RT	4	TYPE A, MC.101.01
166+59 RT TO 166+69, RT	10	TRANSITION TYPE A TO TYPE C
166+64, LT TO 166+74, LT	10	TRANSITION TYPE C TO TYPE A
166+80, LT TO 166+88, LT	8	TRANSITION TYPE A TO TYPE C

DRAINAGE STRUCTURE SCHEDULE

NO	STATION / OFFSET	TC/TG	INV. OUT	REMARKS
OW-800	166+72.5, 16.8' LT	-	-	OBSERVATION WELL
I-4	166+77.3, 12.7' LT	262.90	261.32	MODIFIED CURB INLET
OW-810	166+51.9, 17.6' RT	-	-	OBSERVATION WELL
I-5	166+56.1, 12.9' RT	262.70	261.12	MODIFIED CURB INLET

CONCRETE EDGING

FROM		TO		QTY
STA	ELEV	STA	ELEV	LF
166+44.23	262.40	166+53.15	262.79	8.9
166+59.15	262.70	166+68.53	262.90	9.4
166+65.16	262.60	166+74.26	262.90	9.1
166+80.26	262.96	166+87.13	262.80	6.9

10' 0 10' 20'
SCALE: 1"=10'

McCORMICK TAYLOR
509 South Exeter Street
4th Floor
Baltimore, Maryland 21202
(410) 662-7400

PLAN AND PROFILE - BMP 80 & 81

FRANKLIN KNOLLS-PHASE 3
SLIGO (13th) ELECTION DISTRICT
PARCEL X, SUBDIVISION X, LIBER X FOLIO X
MONTGOMERY COUNTY, MARYLAND

CLIENT: MONTGOMERY COUNTY DEPT OF ENVIRONMENTAL PROTECTION
255 ROCKVILLE PIKE, RM. 120
ROCKVILLE, MD 20850-4166
MR. PAUL BOGLE, P.E.
(240) 777-7757

DESIGN	KCS
DRAFT	WJW
APPROVED	HJD
DATE	JUNE 2015
SCALE	1"=10'

SHEET 14 OF 43

PLOT BY: 14512013 - Goodwin, LID - Forest Edges and the Four Corners Area\Design\Engineering\Plan Set\FK P3\gm3-P008_FK3_BMP-80_81.dgn
PLOTTED: Tuesday, June 02, 2015 AT 10:35 AM

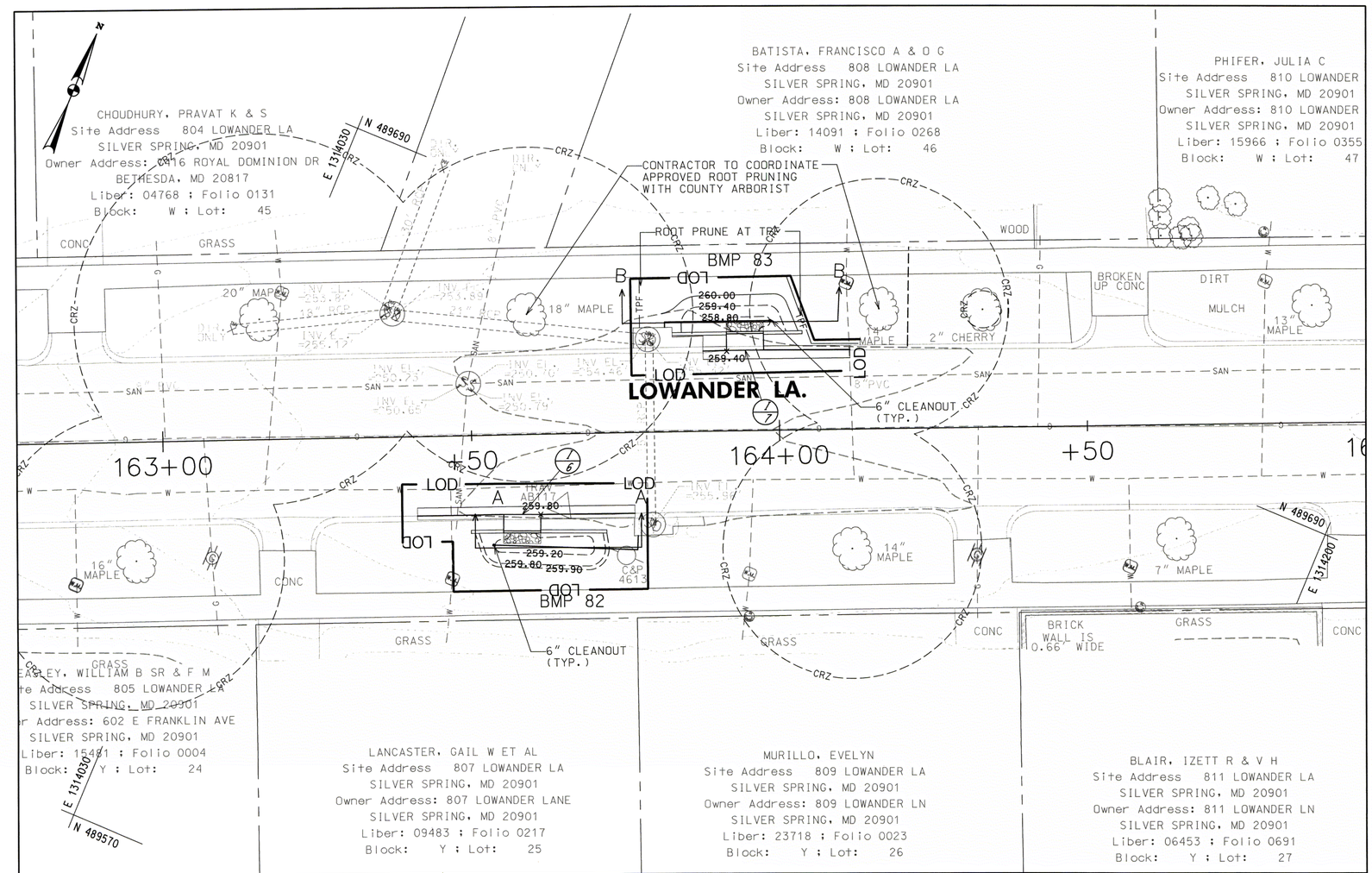

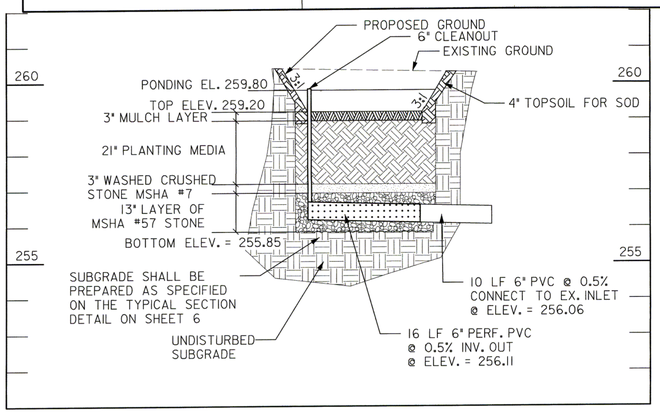

PROFILE (A-A) - BIORETENTION FACILITY (BMP 82)

SCALE: HORIZ. 1"=10'
VERT. 1"=2'

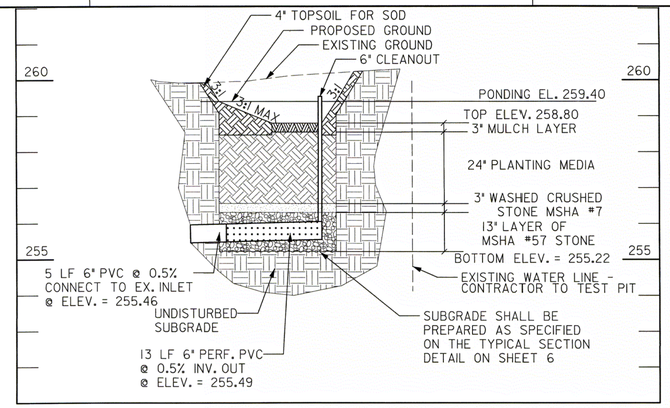

PROFILE (B-B) - BIORETENTION FACILITY (BMP 83)

SCALE: HORIZ. 1"=10'
VERT. 1"=2'

PIPE SCHEDULE				
FROM	TO	SIZE (IN)	TYPE	LENGTH (LF)
163+53.4	163+69.3	6	PERF. PVC	16
163+69.3	163+76.9	6	PVC	10
163+98.7	163+85.3	6	PERF. PVC	13
163+85.3	163+81.6	6	PVC	5

COMBINATION CONC. CURB AND GUTTER		
STA. TO STA.	L.F.	REMARKS
163+41, RT TO 163+51, RT	10	TRANSITION TYPE C TO TYPE A
163+51, RT TO 163+55, RT	4	TYPE A, MC.101.01
163+61, RT TO 163+76, RT	15	TYPE A, MC.101.01
163+88, LT TO 163+92, LT	4	TRANSITION TYPE C TO TYPE A
163+98, LT TO 164+02, LT	4	TYPE A, MC.101.01
164+02, LT TO 164+12, LT	10	TRANSITION TYPE A TO TYPE C

CONCRETE EDGING				
FROM		TO		QTY
STA	ELEV	STA	ELEV	LF
163+49.75	260.10	163+54.99	260.51	5.3
163+60.99	260.40	163+71.72	260.00	10.7
163+82.82	259.92	163+91.62	259.90	8.8
163+97.62	259.99	164+03.91	260.00	6.3

DRAINAGE STRUCTURE SCHEDULE				
NO	STATION / OFFSET	TC/TG	INV. OUT	REMARKS
I-6	163+58.1, 12.8' RT	260.30	258.72	MODIFIED CURB INLET
CO-820	163+53.4, 17.7' RT	-	-	CLEANOUT
I-7	163+94.6, 13.0' LT	259.90	258.32	MODIFIED CURB INLET
CO-830	163+98.7, 17.7' LT	-	-	CLEANOUT

10' 0 10' 20'
SCALE: 1"=10'

AS-BUILT DATA FOR FILTERS (BIORETENTION/RAIN GARDENS)

*TO BE COMPLETED BY THE CERTIFYING ENGINEER

TYPE OF FACILITY: BIORETENTION BMP ID: BMP 82

FEATURE	DESIGN	*AS-BUILT
DRAINAGE AREA (AC)	1.37	
TOTAL IMPERVIOUS AREA (AC)	0.46	
TREATMENT VOLUME PROVIDED (CF)	111	
TARGET WQv TREATMENT VOLUME (CF)	1,751	
FILTER BED AREA (SF) [1]	. 44	
FILTER BED SURFACE ELEVATION	259.20	
DESIGN POINT/MAX. PONDING ELEVATION	259.80	
PONDED WATER SURFACE ELEVATION AREA (SF) [2]	98	
OUTLET PIPE (UNDERDRAIN) SIZE / INVERT ELEV.	6" / 256.11	
THICKNESS OF FILTER MEDIA	REFER TO PROFILE	
PLACEMENT OF GEOTEXTILE (SIDES ONLY)	REFER TO FACILITY TYP. SECTION - SHEET 6	
PLANTINGS	REFER TO LANDSCAPE PLAN - SHEET 43	
COMPOSITION OF FILTER MEDIA	REFER TO MCDEP SPECIFICATIONS	

*NOTES:
1. "FILTER BED AREA (SF)" REPRESENTS THE EXPOSED SURFACE AREA AT THE PROPOSED "FILTER BED SURFACE ELEVATION".
2. FOR MATERIAL QUANTITY ESTIMATIONS, THE PLANTING MEDIA, STONE, MULCH, ETC. SHOULD BE BASED ON THE AREA OF "PONDED WATER SURFACE ELEVATION AREA (SF)".
3. CONTRACTOR SHALL TEST PIT UTILITIES PRIOR TO CONSTRUCTION. IF UTILITY IS UNAVOIDABLE, CONTRACTOR SHALL REFER TO SHEET 6 FOR UTILITY CROSSING DETAIL WITHIN THE FACILITY.

AS-BUILT DATA FOR FILTERS (BIORETENTION/RAIN GARDENS)

*TO BE COMPLETED BY THE CERTIFYING ENGINEER

TYPE OF FACILITY: BIORETENTION BMP ID: BMP 83

FEATURE	DESIGN	*AS-BUILT
DRAINAGE AREA (AC)	0.37	
TOTAL IMPERVIOUS AREA (AC)	0.16	
TREATMENT VOLUME PROVIDED (CF)	76	
TARGET WQv TREATMENT VOLUME (CF)	590	
FILTER BED AREA (SF) [1]	15	
FILTER BED SURFACE ELEVATION	258.80	
DESIGN POINT/MAX. PONDING ELEVATION	259.40	
PONDED WATER SURFACE ELEVATION AREA (SF) [2]	65	
OUTLET PIPE (UNDERDRAIN) SIZE / INVERT ELEV.	6" / 255.49	
THICKNESS OF FILTER MEDIA	REFER TO PROFILE	
PLACEMENT OF GEOTEXTILE (SIDES ONLY)	REFER TO FACILITY TYP. SECTION - SHEET 6	
PLANTINGS	REFER TO LANDSCAPE PLAN - SHEET 43	
COMPOSITION OF FILTER MEDIA	REFER TO MCDEP SPECIFICATIONS	

McCORMICK TAYLOR
509 South Exeter Street
4th Floor
Baltimore, Maryland 21202
(410) 662-7400

PLAN AND PROFILE - BMP 82 & 83

FRANKLIN KNOLLS-PHASE 3
SLIGO (13th) ELECTION DISTRICT
PARCEL X, SUBDIVISION X, LIBER X FOLIO X
MONTGOMERY COUNTY, MARYLAND

CLIENT: MONTGOMERY COUNTY DEPT OF ENVIRONMENTAL PROTECTION
255 ROCKVILLE PIKE, RM. 120
ROCKVILLE, MD 20850-4166
MR. PAUL BOGLE, P.E.
(240) 777-7757

DESIGN	KCS
DRAFT	WJW
APPROVED	HJD
DATE	JUNE 2015
SCALE	1"=10'

SHEET 15 OF 43

FILE: I:\15182\13 - Roadway\LD - Forest Estates and the Four Corners Area\Design\Engineering\PlanSet\FX PSyHRD-P009_FK3_BMP-82_83.dgn
PLOTTED: Tuesday, June 02, 2015 At 11:15 AM

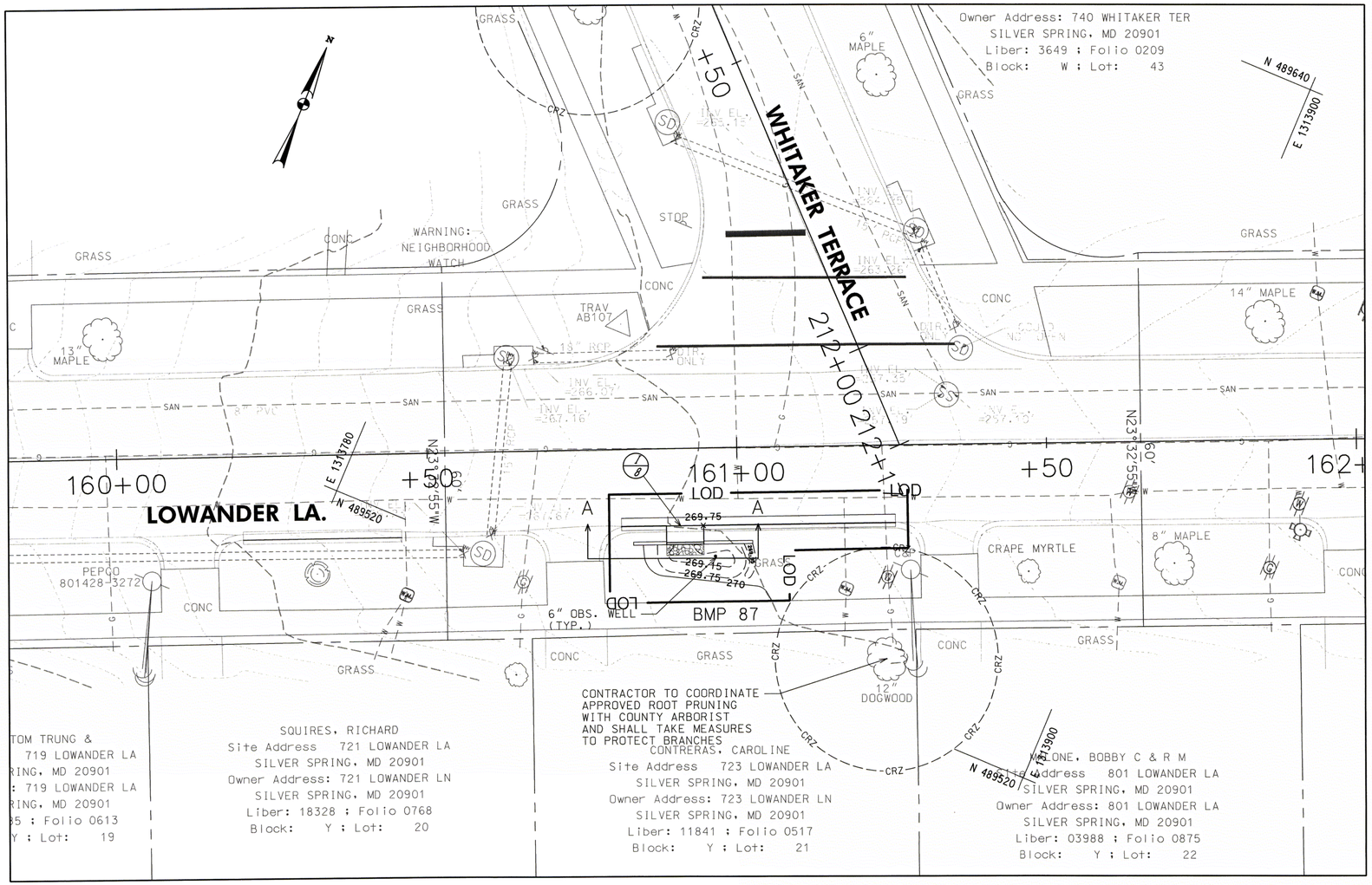

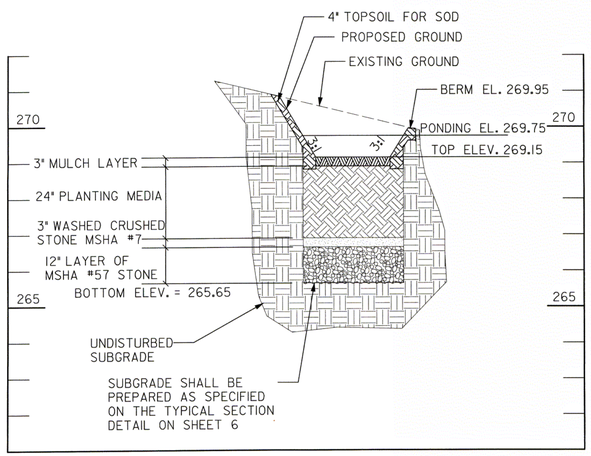

PROFILE (A-A) - RAIN GARDEN FACILITY (BMP 87)

SCALE: HORIZ. 1"=10'
VERT. 1"=2'

AS-BUILT DATA FOR FILTERS (BIORETENTION/RAIN GARDENS)

*TO BE COMPLETED BY THE CERTIFYING ENGINEER

TYPE OF FACILITY: RAIN GARDEN **BMP ID:** BMP 87

FEATURE	DESIGN	*AS-BUILT
DRAINAGE AREA (AC)	0.14	
TOTAL IMPERVIOUS AREA (AC)	0.07	
TREATMENT VOLUME PROVIDED (CF)	80	
TARGET WQv TREATMENT VOLUME (CF)	254	
FILTER BED AREA (SF) [1]	24	
FILTER BED SURFACE ELEVATION	269.15	
DESIGN POINT/MAX. PONDING ELEVATION	269.75	
PONDED WATER SURFACE ELEVATION AREA (SF) [2]	66	
OUTLET PIPE (UNDERDRAIN) SIZE / INVERT ELEV.		
THICKNESS OF FILTER MEDIA	REFER TO PROFILE	
PLACEMENT OF GEOTEXTILE (SIDES ONLY)	REFER TO FACILITY TYP. SECTION – SHEET 6	
PLANTINGS	REFER TO LANDSCAPE PLAN – SHEET 43	
COMPOSITION OF FILTER MEDIA	REFER TO MCDEP SPECIFICATIONS	

*NOTES:
1. "FILTER BED AREA (SF)" REPRESENTS THE EXPOSED SURFACE AREA AT THE PROPOSED "FILTER BED SURFACE ELEVATION".
2. FOR MATERIAL QUANTITY ESTIMATIONS, THE PLANTING MEDIA, STONE, MULCH, ETC. SHOULD BE BASED ON THE AREA OF "PONDED WATER SURFACE ELEVATION AREA (SF)".
3. CONTRACTOR SHALL TEST PIT UTILITIES PRIOR TO CONSTRUCTION. IF UTILITY IS UNAVOIDABLE, CONTRACTOR SHALL REFER TO SHEET 6 FOR UTILITY CROSSING DETAIL WITHIN THE FACILITY.

COMBINATION CONC. CURB AND GUTTER

STA. TO STA.	L.F.	REMARKS
160+81, RT TO 160+88, RT	7	TRANSITION TYPE C TO TYPE A
160+94, RT TO 161+00, RT	6	TYPE A, MC.101.01
161+00, RT TO 161+25, RT	25	TRANSITION TYPE A TO TYPE C

DRAINAGE STRUCTURE SCHEDULE

NO	STATION / OFFSET	TC/TG	INV. OUT	REMARKS
OW-870	160+96.3, 17.4' RT	-	-	OBSERVATION WELL
I-8	160+91.5, 12.4' RT	270.25	268.67	MODIFIED CURB INLET

CONCRETE EDGING

FROM		TO		QTY
STA	ELEV	STA	ELEV	LF
160+83.14	270.50	160+88.48	270.53	5.3
160+94.48	270.25	161+02.35	269.85	7.9

10' 0 10' 20'
SCALE: 1"=10'

McCORMICK TAYLOR
509 South Exeter Street
4th Floor
Baltimore, Maryland 21202
(410) 662-7400

PLAN AND PROFILE - BMP 87

FRANKLIN KNOLLS-PHASE 3

SLIGO (13th) ELECTION DISTRICT
PARCEL X, SUBDIVISION X, LIBER X FOLIO X
MONTGOMERY COUNTY, MARYLAND

CLIENT: MONTGOMERY COUNTY DEPT OF ENVIRONMENTAL PROTECTION
255 ROCKVILLE PIKE, RM. 120
ROCKVILLE, MD 20850-4166
MR. PAUL BOGLE, P.E.
(240) 777-7757

DESIGN	KGS
DRAFT	WJW
APPROVED	HJD
DATE	JUNE 2015
SCALE	1"=10'

SHEET 16 OF 43

M:\E 1345013 - Rockville LID - Forest Edges and the Four Corners Area\Design\Engineering\PlanSet\FK P3\pltHD-P012_PK3_BMP-87_56.dgn
PLOTTED: Tuesday, June 02, 2015 AT 10:55 AM

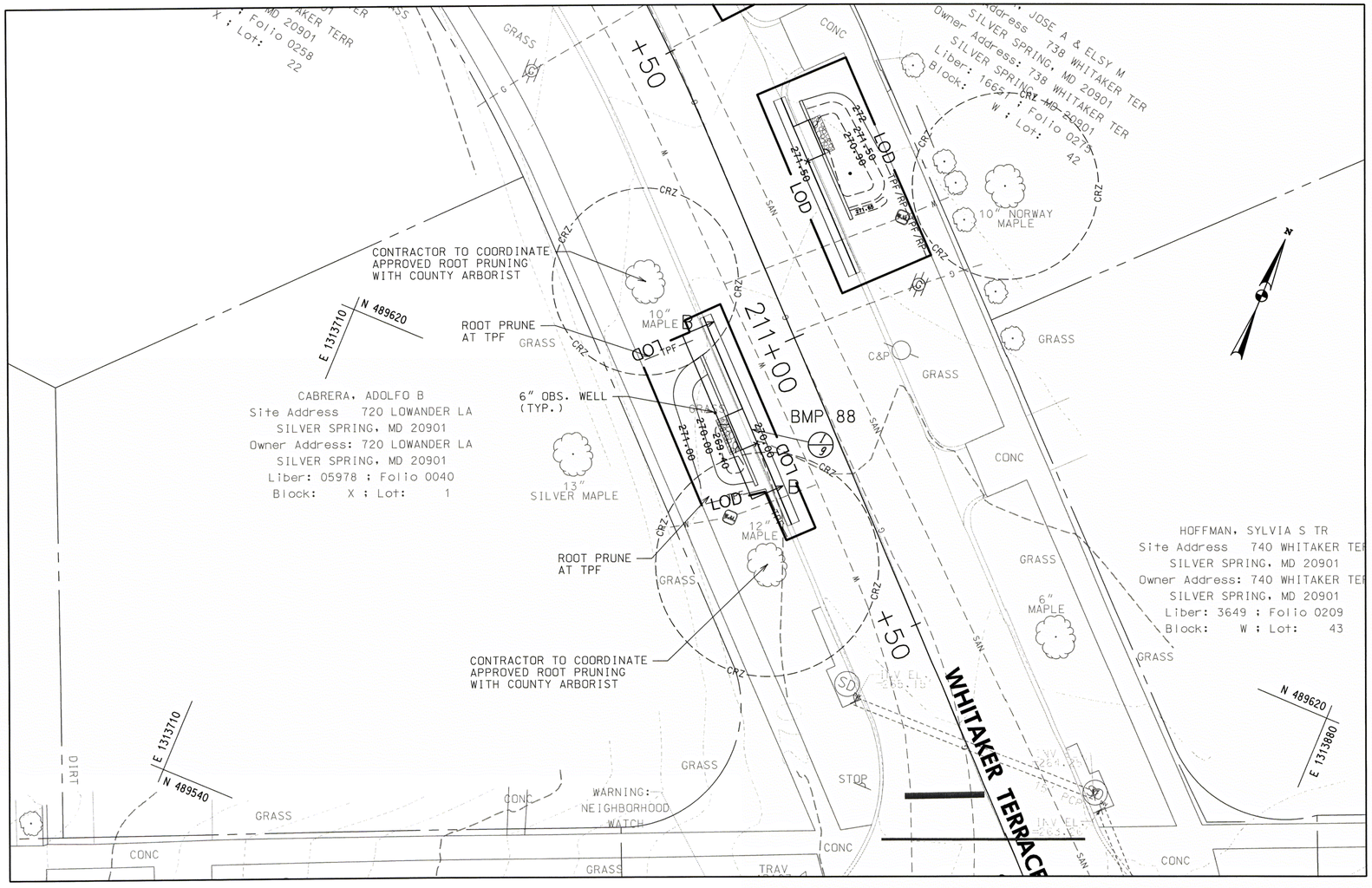

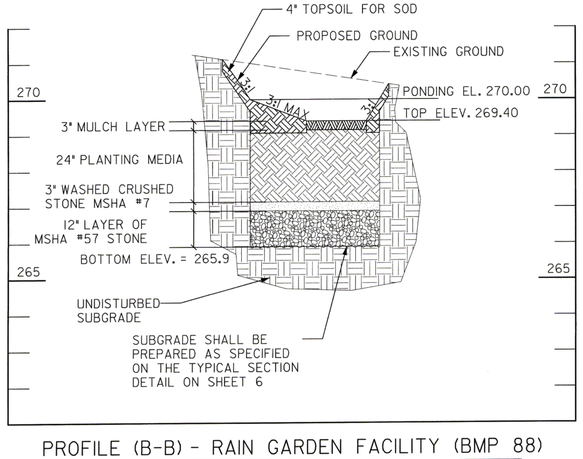

PROFILE (B-B) - RAIN GARDEN FACILITY (BMP 88)

SCALE: HORIZ. 1"=10'
VERT. 1"=2'

COMBINATION CONC. CURB AND GUTTER		
STA. TO STA.	L.F.	REMARKS
210+91, RT TO 211+01, RT	10	TRANSITION TYPE C TO TYPE A
211+01, RT TO 211+07, RT	6	TYPE A, MC.101.01
211+13, RT TO 211+17, RT	4	TYPE A, MC.101.01
211+17, RT TO 211+27, RT	10	TRANSITION TYPE A TO TYPE C

DRAINAGE STRUCTURE SCHEDULE				
NO	STATION / OFFSET	TC/TG	INV. OUT	REMARKS
OW-880	211+06.1, 16.5' RT	-	-	OBSERVATION WELL
I-9	211+10.2, 12.2' RT	270.50	268.92	MODIFIED CURB INLET

CONCRETE EDGING				
FROM		TO		QTY
STA	ELEV	STA	ELEV	LF
210+96.76	271.00	211+07.21	270.72	10.5
211+13.21	270.50	211+19.38	270.20	6.2

AS-BUILT DATA FOR FILTERS (BIORETENTION/RAIN GARDENS)

*TO BE COMPLETED BY THE CERTIFYING ENGINEER

TYPE OF FACILITY: RAIN GARDEN BMP ID: BMP 88

FEATURE	DESIGN	*AS-BUILT
DRAINAGE AREA (AC)	1.94	
TOTAL IMPERVIOUS AREA (AC)	0.43	
TREATMENT VOLUME PROVIDED (CF)	89	
TARGET WQv TREATMENT VOLUME (CF)	1,757	
FILTER BED AREA (SF) [1]	20	
FILTER BED SURFACE ELEVATION	269.40	
DESIGN POINT/MAX. PONDING ELEVATION	270.00	
PONDED WATER SURFACE ELEVATION AREA (SF) [2]	75	
OUTLET PIPE (UNDERDRAIN) SIZE / INVERT ELEV.		
THICKNESS OF FILTER MEDIA	REFER TO PROFILE	
PLACEMENT OF GEOTEXTILE (SIDES ONLY)	REFER TO FACILITY TYP. SECTION - SHEET 6	
PLANTINGS	REFER TO LANDSCAPE PLAN - SHEET 43	
COMPOSITION OF FILTER MEDIA	REFER TO MCDEP SPECIFICATIONS	

*NOTES:
1. "FILTER BED AREA (SF)" REPRESENTS THE EXPOSED SURFACE AREA AT THE PROPOSED "FILTER BED SURFACE ELEVATION".
2. FOR MATERIAL QUANTITY ESTIMATIONS, THE PLANTING MEDIA, STONE, MULCH, ETC. SHOULD BE BASED ON THE AREA OF "PONDED WATER SURFACE ELEVATION AREA (SF)".
3. CONTRACTOR SHALL TEST PIT UTILITIES PRIOR TO CONSTRUCTION. IF UTILITY IS UNAVOIDABLE, CONTRACTOR SHALL REFER TO SHEET 6 FOR UTILITY CROSSING DETAIL WITHIN THE FACILITY.

10' 0 10' 20'
SCALE: 1"=10'

McCORMICK TAYLOR
509 South Exeter Street
4th Floor
Baltimore, Maryland 21202
(410) 662-7400

PLAN AND PROFILE - BMP 88

FRANKLIN KNOLLS-PHASE 3

SLIGO (13th) ELECTION DISTRICT
PARCEL X, SUBDIVISION X, LIBER X FOLIO X
MONTGOMERY COUNTY, MARYLAND

CLIENT: MONTGOMERY COUNTY DEPT OF ENVIRONMENTAL PROTECTION
255 ROCKVILLE PIKE, RM. 120
ROCKVILLE, MD 20850-4166
MR. PAUL BOGLE, P.E.
(240) 777-7757

DESIGN	KCS		
DRAFT	WJW	APPROVED	HJD
		DATE	JUNE 2015
		SCALE	1"=10'

SHEET 17 OF 43

FILE: I:\5\15\213, Roadway LID - Forest Estates and the Four Corners Area\Design\Engineering\PlanSet\FK P3\pltD-P011_FK3_BMP-_88.dgn
PLOTTED: Tuesday, June 02, 2015 AT 10:33 AM

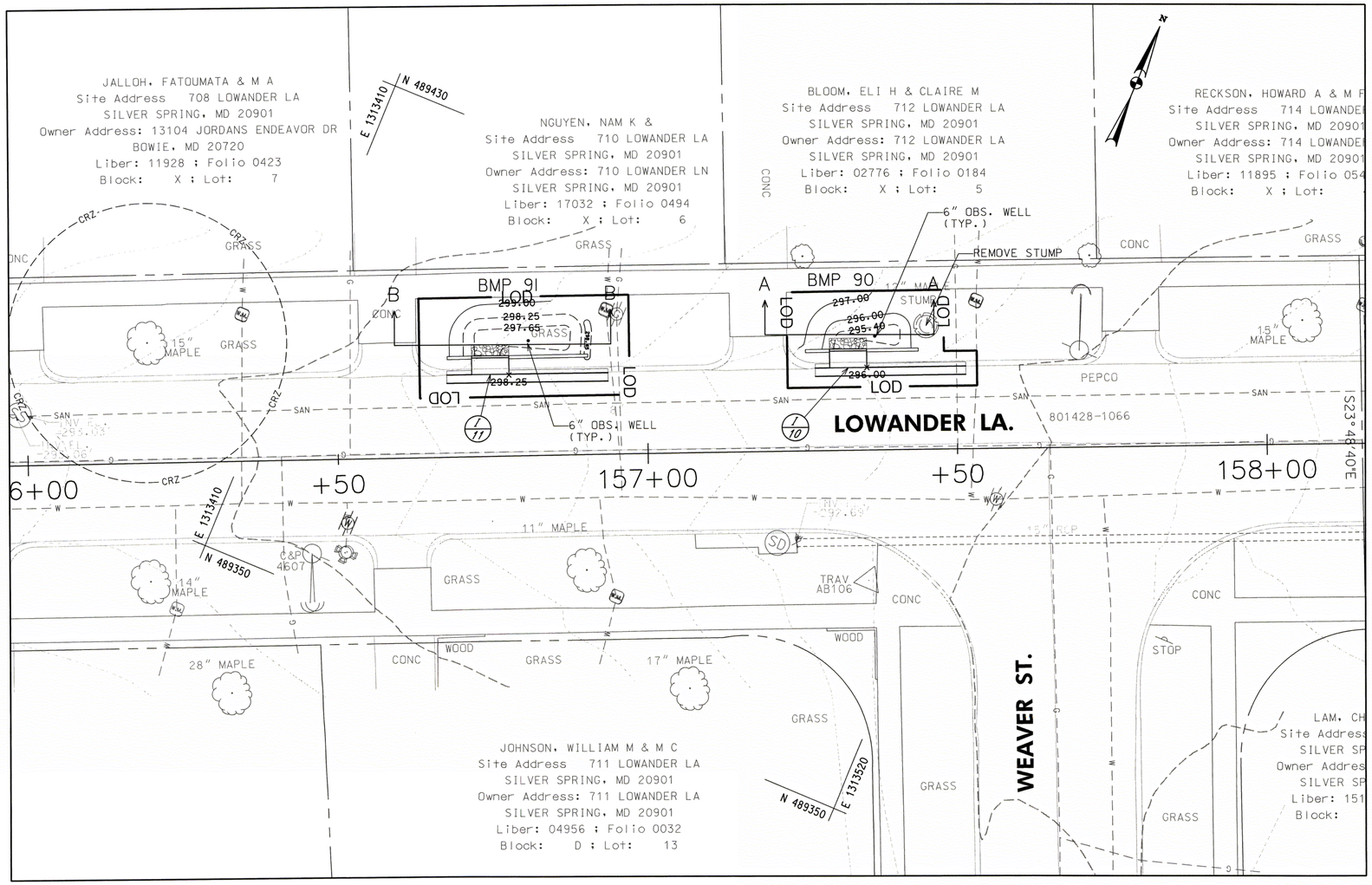

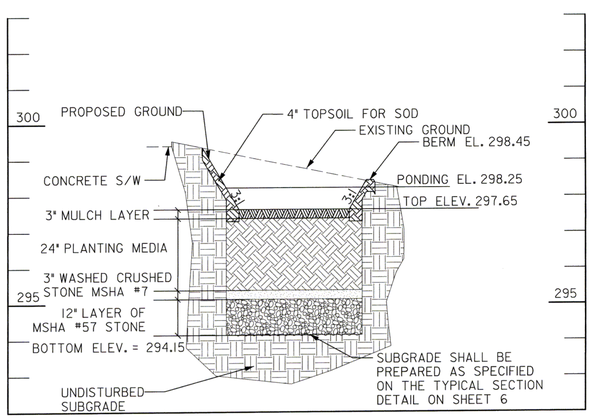

PROFILE (B-B) - RAIN GARDEN FACILITY (BMP 91)

SCALE: HORIZ. 1"=10'
VERT. 1"=2'

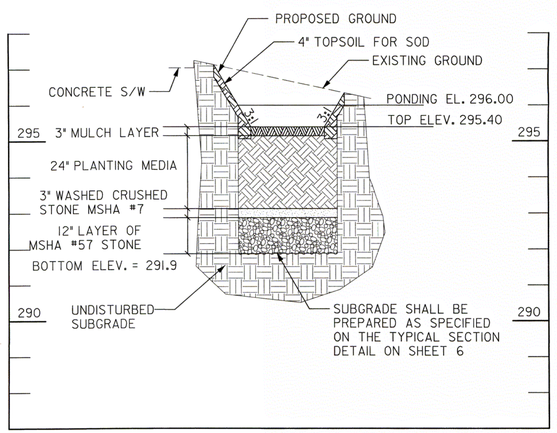

PROFILE (A-A) - RAIN GARDEN FACILITY (BMP 90)

SCALE: HORIZ. 1"=10'
VERT. 1"=2'

COMBINATION CONC. CURB AND GUTTER		
STA. TO STA.	L.F.	REMARKS
156+68, LT TO 156+72, LT	4	TRANSITION TYPE C TO TYPE A
156+78, LT TO 156+84, LT	6	TYPE A, MC.101.01
156+84, LT TO 156+94, LT	10	TRANSITION TYPE A TO TYPE C
157+27, LT TO 157+30, LT	3	TRANSITION TYPE C TO TYPE A
157+36, LT TO 157+42, LT	6	TYPE A, MC.101.01
157+42, LT TO 157+52, LT	10	TRANSITION TYPE A TO TYPE C

DRAINAGE STRUCTURE SCHEDULE				
NO	STATION / OFFSET	TC/TG	INV. OUT	REMARKS
OW-900	157+36.9, 18.3' LT	-	-	OBSERVATION WELL
I-10	157+32.6, 13.3' LT	296.50	294.92	MODIFIED CURB INLET
OW-910	156+80.9, 18.5' LT	-	-	OBSERVATION WELL
I-11	156+74.7, 13.2' LT	298.75	297.17	MODIFIED CURB INLET

CONCRETE EDGING				
FROM		TO		QTY
STA	ELEV	STA	ELEV	LF
156+67.80	299.10	156+71.74	298.98	3.9
156+77.74	298.75	156+90.48	298.45	12.7
157+27.22	296.80	157+29.55	296.73	3.9
157+35.55	296.50	157+43.88	296.20	9.4

AS-BUILT DATA FOR FILTERS (BIORETENTION/RAIN GARDENS)

*TO BE COMPLETED BY THE CERTIFYING ENGINEER

TYPE OF FACILITY: RAIN GARDEN BMP ID: BMP 90

FEATURE	DESIGN	*AS-BUILT
DRAINAGE AREA (AC)	0.10	
TOTAL IMPERVIOUS AREA (AC)	0.05	
TREATMENT VOLUME PROVIDED (CF)	89	
TARGET WQv TREATMENT VOLUME (CF)	182	
FILTER BED AREA (SF) [1]	28	
FILTER BED SURFACE ELEVATION	295.40	
DESIGN POINT/MAX. PONDING ELEVATION	296.00	
PONDED WATER SURFACE ELEVATION AREA (SF) [2]	68	
OUTLET PIPE (UNDERDRAIN) SIZE / INVERT ELEV.		
THICKNESS OF FILTER MEDIA	REFER TO PROFILE	
PLACEMENT OF GEOTEXTILE (SIDES ONLY)	REFER TO FACILITY TYP. SECTION – SHEET 6	
PLANTINGS	REFER TO LANDSCAPE PLAN – SHEET 43	
COMPOSITION OF FILTER MEDIA	REFER TO MCDEP SPECIFICATIONS	

*NOTES:

1. "FILTER BED AREA (SF)" REPRESENTS THE EXPOSED SURFACE AREA AT THE PROPOSED "FILTER BED SURFACE ELEVATION".
2. FOR MATERIAL QUANTITY ESTIMATIONS, THE PLANTING MEDIA, STONE, MULCH, ETC. SHOULD BE BASED ON THE AREA OF "PONDED WATER SURFACE ELEVATION AREA (SF)".
3. CONTRACTOR SHALL TEST PIT UTILITIES PRIOR TO CONSTRUCTION. IF UTILITY IS UNAVOIDABLE, CONTRACTOR SHALL REFER TO SHEET 6 FOR UTILITY CROSSING DETAIL WITHIN THE FACILITY.

AS-BUILT DATA FOR FILTERS (BIORETENTION/RAIN GARDENS)

*TO BE COMPLETED BY THE CERTIFYING ENGINEER

TYPE OF FACILITY: RAIN GARDEN BMP ID: BMP 91

FEATURE	DESIGN	*AS-BUILT
DRAINAGE AREA (AC)	0.58	
TOTAL IMPERVIOUS AREA (AC)	0.26	
TREATMENT VOLUME PROVIDED (CF)	146	
TARGET WQv TREATMENT VOLUME (CF)	955	
FILTER BED AREA (SF) [1]	60	
FILTER BED SURFACE ELEVATION	297.65	
DESIGN POINT/MAX. PONDING ELEVATION	298.25	
PONDED WATER SURFACE ELEVATION AREA (SF) [2]	116	
OUTLET PIPE (UNDERDRAIN) SIZE / INVERT ELEV.		
THICKNESS OF FILTER MEDIA	REFER TO PROFILE	
PLACEMENT OF GEOTEXTILE (SIDES ONLY)	REFER TO FACILITY TYP. SECTION – SHEET 6	
PLANTINGS	REFER TO LANDSCAPE PLAN – SHEET 43	
COMPOSITION OF FILTER MEDIA	REFER TO MCDEP SPECIFICATIONS	

10' 0 10' 20'
SCALE: 1"=10'

McCORMICK TAYLOR
509 South Exeter Street
4th Floor
Baltimore, Maryland 21202
(410) 662-7400

PLAN AND PROFILE - BMP 90 & 91

FRANKLIN KNOLLS-PHASE 3

SLIGO (13th) ELECTION DISTRICT
PARCEL X, SUBDIVISION X, LIBER X FOLIO X
MONTGOMERY COUNTY, MARYLAND

CLIENT: MONTGOMERY COUNTY DEPT OF ENVIRONMENTAL PROTECTION
255 ROCKVILLE PIKE, RM. 120
ROCKVILLE, MD 20850-4166
MR. PAUL BOGLE, P.E.
(240) 777-7757

DESIGN	KCS
DRAFT	WJW
APPROVED	HJD
DATE	JUNE 2015
SCALE	1"=10'

SHEET 18 OF 43

TIE: 1416513 - RowKey I.D. - Forest Estates and the Four Corners Area\Design\Engineering\PlansSet\FK PlpnID-PV13_FKS_BMP-90_91.dgn
PLOTTED: Tuesday, June 02, 2015 AT 10:35 AM

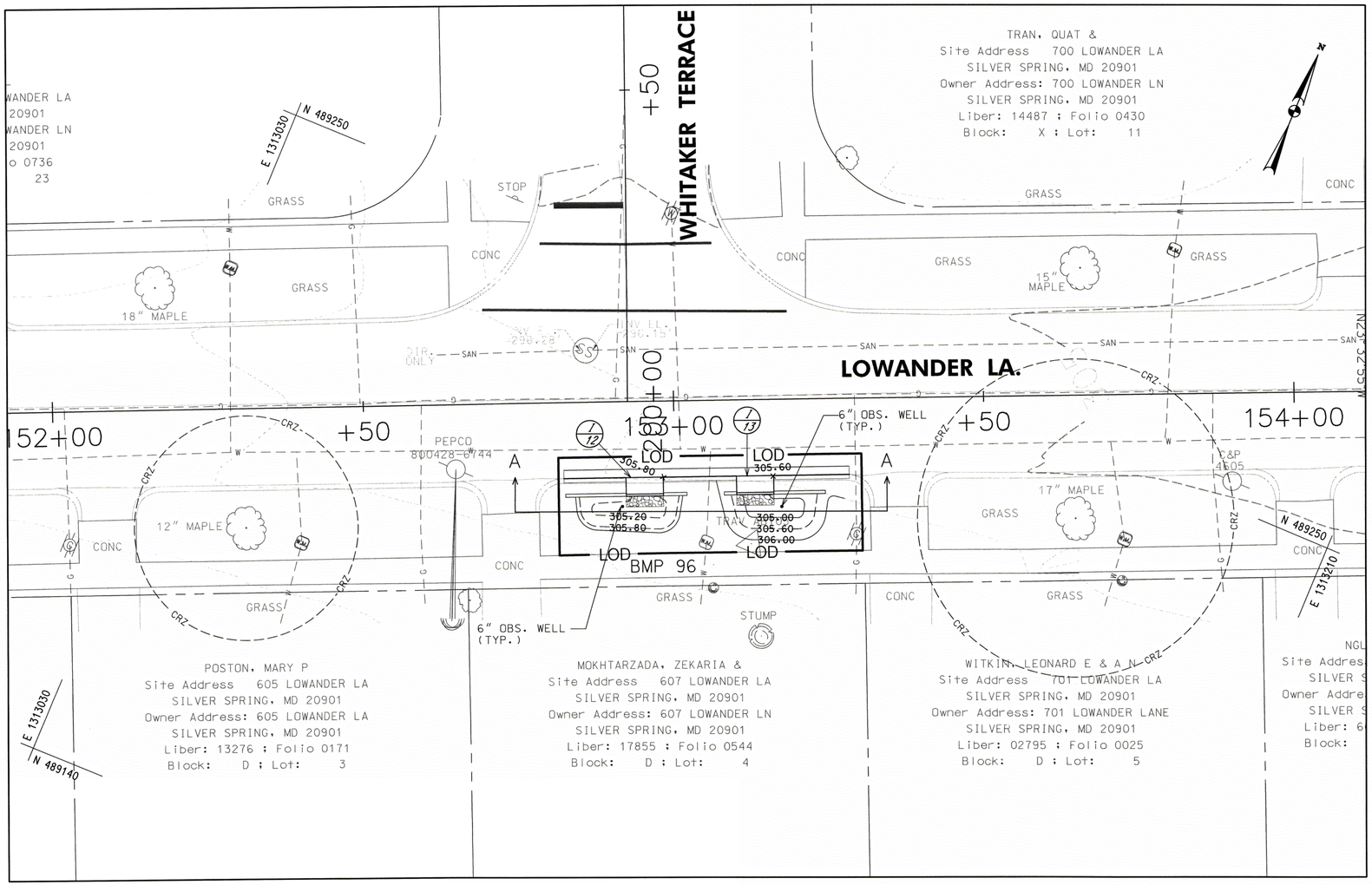

AS-BUILT DATA FOR FILTERS (BIORETENTION/RAIN GARDENS)

*TO BE COMPLETED BY THE CERTIFYING ENGINEER

TYPE OF FACILITY: RAIN GARDEN **BMP ID:** BMP 96

FEATURE	DESIGN	*AS-BUILT
DRAINAGE AREA (AC)	0.48	
TOTAL IMPERVIOUS AREA (AC)	0.21	
TREATMENT VOLUME PROVIDED (CF)	177	
TARGET WQv TREATMENT VOLUME (CF)	773	
FILTER BED AREA (SF) [1]	63	
FILTER BED SURFACE ELEVATION	305.20, 305.00	
DESIGN POINT/MAX. PONDING ELEVATION	305.80, 305.60	
PONDED WATER SURFACE ELEVATION AREA (SF) [2]	144	
OUTLET PIPE (UNDERDRAIN) SIZE / INVERT ELEV.		
THICKNESS OF FILTER MEDIA	REFER TO PROFILE	
PLACEMENT OF GEOTEXTILE (SIDES ONLY)	REFER TO FACILITY TYP. SECTION – SHEET 6	
PLANTINGS	REFER TO LANDSCAPE PLAN – SHEET 43	
COMPOSITION OF FILTER MEDIA	REFER TO MCDEP SPECIFICATIONS	

*NOTES:
1. "FILTER BED AREA (SF)" REPRESENTS THE EXPOSED SURFACE AREA AT THE PROPOSED "FILTER BED SURFACE ELEVATION".
2. FOR MATERIAL QUANTITY ESTIMATIONS, THE PLANTING MEDIA, STONE, MULCH, ETC. SHOULD BE BASED ON THE AREA OF "PONDED WATER SURFACE ELEVATION AREA (SF)".
3. CONTRACTOR SHALL TEST PIT UTILITIES PRIOR TO CONSTRUCTION. IF UTILITY IS UNAVOIDABLE, CONTRACTOR SHALL REFER TO SHEET 6 FOR UTILITY CROSSING DETAIL WITHIN THE FACILITY.

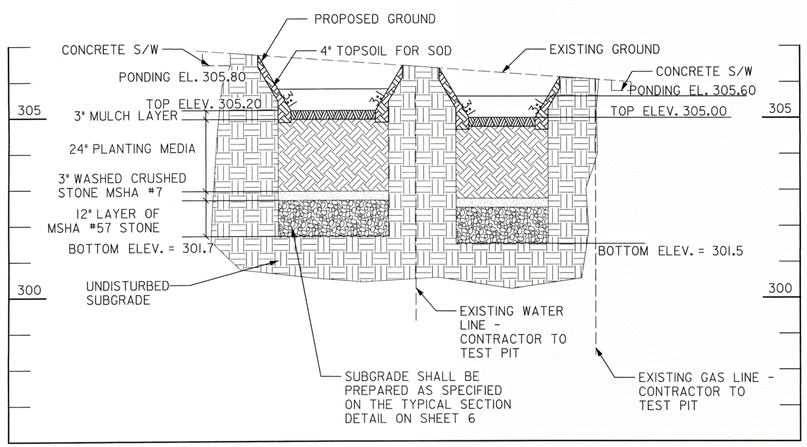

PROFILE (A-A) - RAIN GARDEN FACILITY (BMP 96)

SCALE: HORIZ. 1"=10'
VERT. 1"=2'

COMBINATION CONC. CURB AND GUTTER		
STA. TO STA.	L.F.	REMARKS
152+82, LT TO 152+92, LT	10	TRANSITION TYPE C TO TYPE A
152+98, LT TO 153+10, LT	12	TYPE A, MC.101.01
153+16, RT TO 153+18, RT	2	TYPE A, MC.101.01
153+18, RT TO 153+28, RT	10	TRANSITION TYPE A TO TYPE C

DRAINAGE STRUCTURE SCHEDULE				
NO	STATION / OFFSET	TC/TG	INV. OUT	REMARKS
OW-960	152+91.5, 16.8' RT	-	-	OBSERVATION WELL
I-12	152+95.2, 12.2' RT	306.30	304.72	MODIFIED CURB INLET
OW-961	153+17.2, 17.2' RT	-	-	OBSERVATION WELL
I-13	153+13.0, 12.2' RT	306.10	304.52	MODIFIED CURB INLET

CONCRETE EDGING				
FROM		TO		QTY
STA	ELEV	STA	ELEV	LF
152+82.41	306.50	152+92.17	306.40	9.8
152+98.17	306.30	153+01.97	306.20	3.8
153+07.97	305.90	153+09.97	306.20	2.0
153+15.97	306.10	153+24.27	305.80	8.3

10' 0 10' 20'
SCALE: 1"=10'

McCORMICK TAYLOR
509 South Exeter Street
4th Floor
Baltimore, Maryland 21202
(410) 662-7400

PLAN AND PROFILE - BMP 96

FRANKLIN KNOLLS-PHASE 3

SLIGO (13th) ELECTION DISTRICT
PARCEL X, SUBDIVISION X, LIBER X FOLIO X
MONTGOMERY COUNTY, MARYLAND

CLIENT: MONTGOMERY COUNTY DEPT OF ENVIRONMENTAL PROTECTION
255 ROCKVILLE PIKE, RM. 120
ROCKVILLE, MD 20850-4166
MR. PAUL BOGLE, P.E.
(240) 777-7757

DESIGN	KCS
DRAFT	WJW
APPROVED	HJD
DATE	JUNE 2015
SCALE	1"=10'

SHEET 19 OF 43

FILE: I:\516213 - Roadway LID – Forest Edible and the Four Corners Area\Design\Engineering\PlanSet\FK PS\pltD-P016_PKG_BMP-96.dgn
PLOTTED: Tuesday, June 02, 2015 AT 10:35 AM

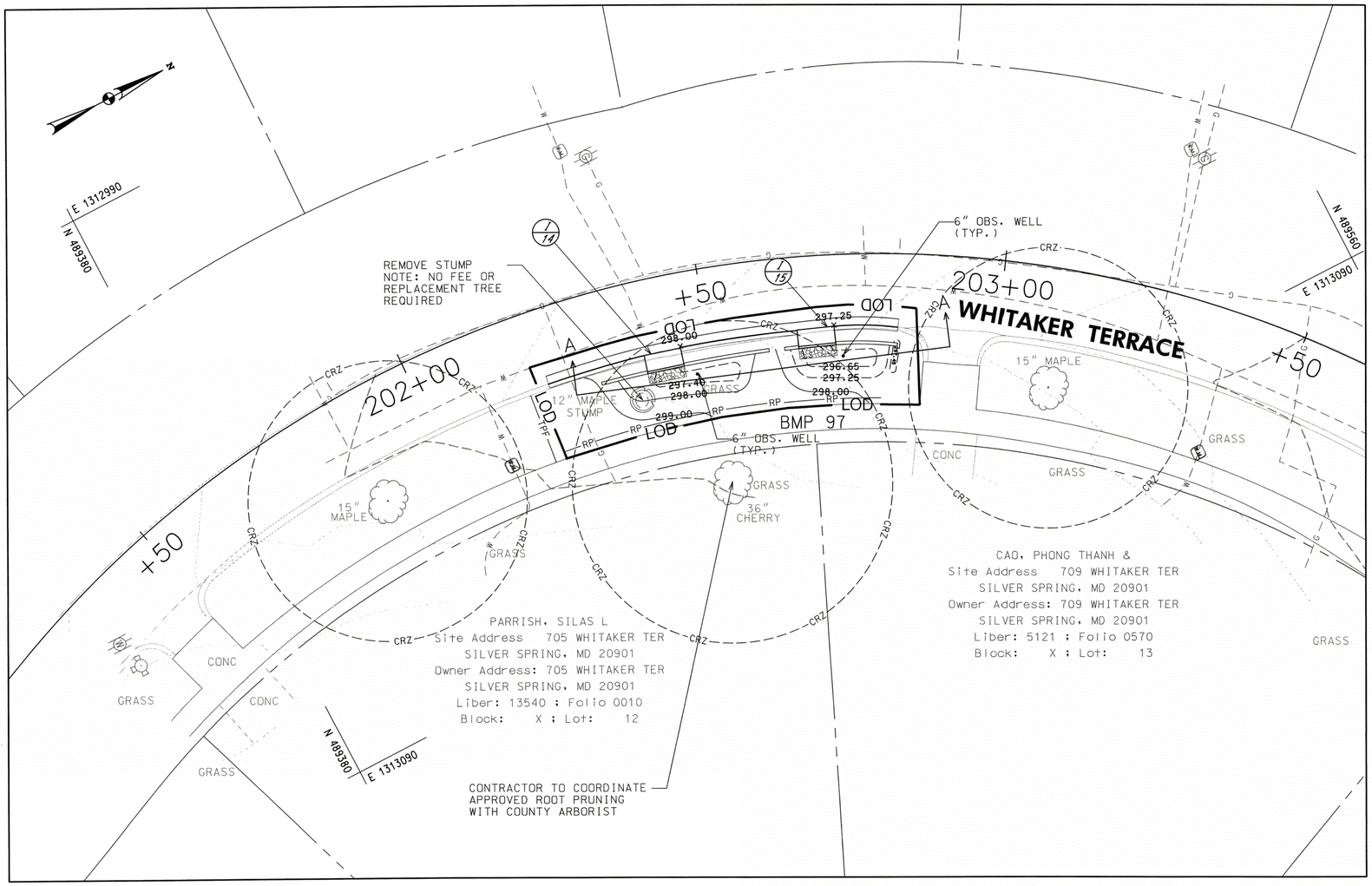

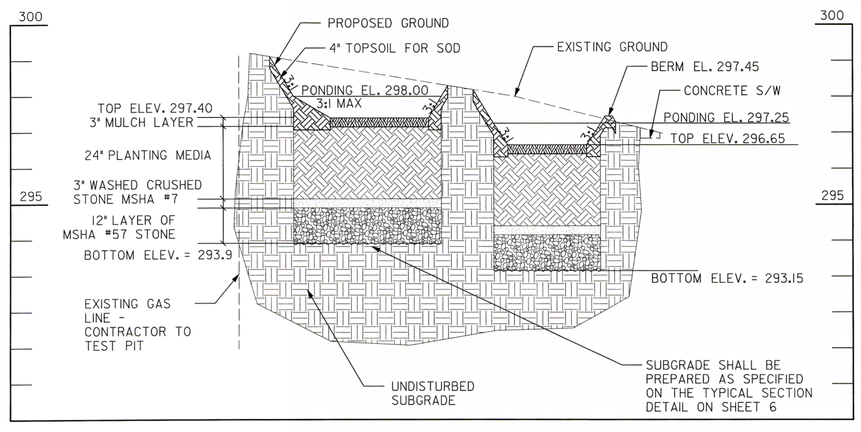

PROFILE (A-A) - RAIN GARDEN FACILITY (BMP 97)

SCALE: HORIZ. 1"=10'
VERT. 1"=2'

AS-BUILT DATA FOR FILTERS (BIORETENTION/RAIN GARDENS)

*TO BE COMPLETED BY THE CERTIFYING ENGINEER

TYPE OF FACILITY: RAIN GARDEN BMP ID: BMP 97

FEATURE	DESIGN	*AS-BUILT
DRAINAGE AREA (AC)	0.41	
TOTAL IMPERVIOUS AREA (AC)	0.18	
TREATMENT VOLUME PROVIDED (CF)	208	
TARGET WQv TREATMENT VOLUME (CF)	662	
FILTER BED AREA (SF) [1]	66	
FILTER BED SURFACE ELEVATION	297.40, 296.65	
DESIGN POINT/MAX. PONDING ELEVATION	298.00, 297.25	
PONDED WATER SURFACE ELEVATION AREA (SF) [2]	171	
OUTLET PIPE (UNDERDRAIN) SIZE / INVERT ELEV.		
THICKNESS OF FILTER MEDIA	REFER TO PROFILE	
PLACEMENT OF GEOTEXTILE (SIDES ONLY)	REFER TO FACILITY TYP. SECTION – SHEET 6	
PLANTINGS	REFER TO LANDSCAPE PLAN – SHEET 43	
COMPOSITION OF FILTER MEDIA	REFER TO MCDEP SPECIFICATIONS	

*NOTES:
1. "FILTER BED AREA (SF)" REPRESENTS THE EXPOSED SURFACE AREA AT THE PROPOSED "FILTER BED SURFACE ELEVATION".
2. FOR MATERIAL QUANTITY ESTIMATIONS, THE PLANTING MEDIA, STONE, MULCH, ETC. SHOULD BE BASED ON THE AREA OF "PONDED WATER SURFACE ELEVATION AREA (SF)".
3. CONTRACTOR SHALL TEST PIT UTILITIES PRIOR TO CONSTRUCTION. IF UTILITY IS UNAVOIDABLE, CONTRACTOR SHALL REFER TO SHEET 6 FOR UTILITY CROSSING DETAIL WITHIN THE FACILITY.

COMBINATION CONC. CURB AND GUTTER

STA. TO STA.	L.F.	REMARKS
202+21, RT TO 202+32, RT	10	TRANSITION TYPE C TO TYPE A
202+32, RT TO 202+39, RT	6	TYPE A, MC.101.01
202+45, RT TO 202+65, RT	19	TYPE A, MC.101.01
202+72, RT TO 202+83, RT	10	TRANSITION TYPE A TO TYPE C

DRAINAGE STRUCTURE SCHEDULE

NO	STATION / OFFSET	TC/TG	INV. OUT	REMARKS
OW-970	202+47.1, 16.6' RT	-	-	OBSERVATION WELL
I-14	202+41.8, 12.0' RT	298.50	296.92	MODIFIED CURB INLET
OW-971	202+73.2, 16.3' RT	-	-	OBSERVATION WELL
I-15	202+68.6, 11.6' RT	297.75	296.17	MODIFIED CURB INLET

CONCRETE EDGING

FROM		TO		QTY
STA	ELEV	STA	ELEV	LF
202+30.29	299.00	202+38.55	298.70	7.6
202+45.09	298.50	202+60.23	298.20	13.9
202+62.99	297.45	202+65.45	297.95	3.0
202+71.98	297.75	202+82.70	297.45	10.0

NOTE: CONTRACTOR SHALL INSTALL ALL CURB AND GUTTER AND CONCRETE EDGING AT EXISTING ARC ALIGNMENT

10' 0 10' 20'
SCALE: 1"=10'

McCORMICK TAYLOR
509 South Exeter Street
4th Floor
Baltimore, Maryland 21202
(410) 662-7400

PLAN AND PROFILE - BMP 97

FRANKLIN KNOLLS-PHASE 3

SLIGO (13th) ELECTION DISTRICT
PARCEL X, SUBDIVISION X, LIBER X FOLIO X
MONTGOMERY COUNTY, MARYLAND

CLIENT: MONTGOMERY COUNTY DEPT OF ENVIRONMENTAL PROTECTION
255 ROCKVILLE PIKE, RM. 120
ROCKVILLE, MD 20850-4166
MR. PAUL BOGLE, P.E.
(240) 777-7757

DESIGN	KCS
DRAFT	WJW
APPROVED	HJD
DATE	JUNE 2015
SCALE	1"=10'

SHEET 20 OF 43

FILE: 13450013, Drawing: LD-, Xref: Edges and the Four Corners Area\Design\Engineering\PlanSet\FK PSp\HD-P017_FK3_BMP-97.dgn
PLOTTED: Tuesday, June 02, 2015 AT 10:35 AM

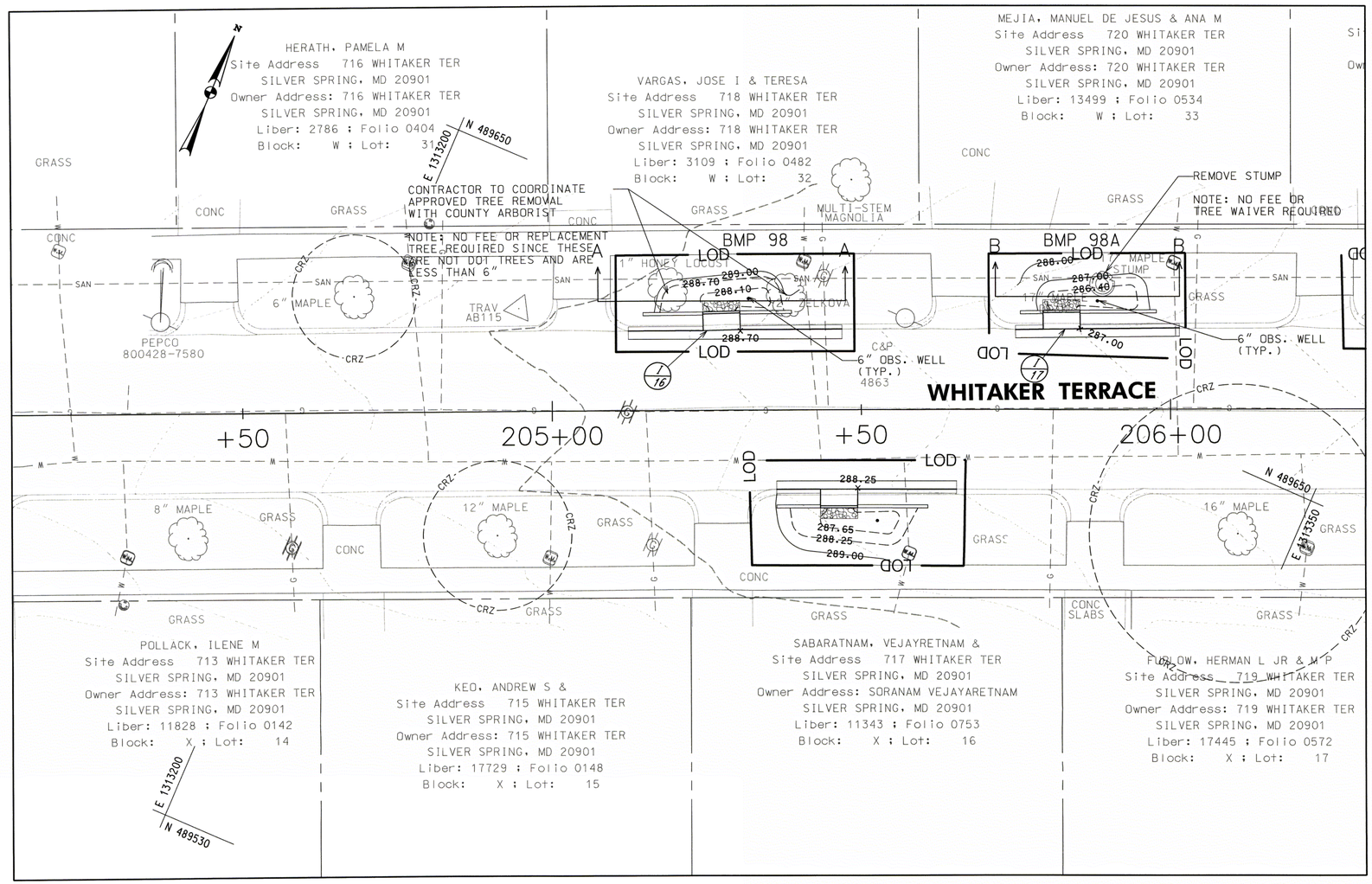

AS-BUILT DATA FOR FILTERS (BIORETENTION/RAIN GARDENS)

*TO BE COMPLETED BY THE CERTIFYING ENGINEER

TYPE OF FACILITY: RAIN GARDEN **BMP ID:** BMP 98 /98A

FEATURE	DESIGN	*AS-BUILT
DRAINAGE AREA (AC)	1.12	
TOTAL IMPERVIOUS AREA (AC)	0.48	
TREATMENT VOLUME PROVIDED (CF)	227	
TARGET WQv TREATMENT VOLUME (CF)	1,771	
FILTER BED AREA (SF) [1]	78	
FILTER BED SURFACE ELEVATION	288.10, 286.40	
DESIGN POINT/MAX. PONDING ELEVATION	288.70, 287.00	
PONDED WATER SURFACE ELEVATION AREA (SF) [2]	185	
OUTLET PIPE (UNDERDRAIN) SIZE / INVERT ELEV.		
THICKNESS OF FILTER MEDIA	REFER TO PROFILE	
PLACEMENT OF GEOTEXTILE (SIDES ONLY)	REFER TO FACILITY TYP. SECTION – SHEET 6	
PLANTINGS	REFER TO LANDSCAPE PLAN – SHEET 43	
COMPOSITION OF FILTER MEDIA	REFER TO MCDEP SPECIFICATIONS	

*NOTES:

1. "FILTER BED AREA (SF)" REPRESENTS THE EXPOSED SURFACE AREA AT THE PROPOSED "FILTER BED SURFACE ELEVATION".
2. FOR MATERIAL QUANTITY ESTIMATIONS, THE PLANTING MEDIA, STONE, MULCH, ETC. SHOULD BE BASED ON THE AREA OF "PONDED WATER SURFACE ELEVATION AREA (SF)".
3. CONTRACTOR SHALL TEST PIT UTILITIES PRIOR TO CONSTRUCTION. IF UTILITY IS UNAVOIDABLE, CONTRACTOR SHALL REFER TO SHEET 6 FOR UTILITY CROSSING DETAIL WITHIN THE FACILITY.

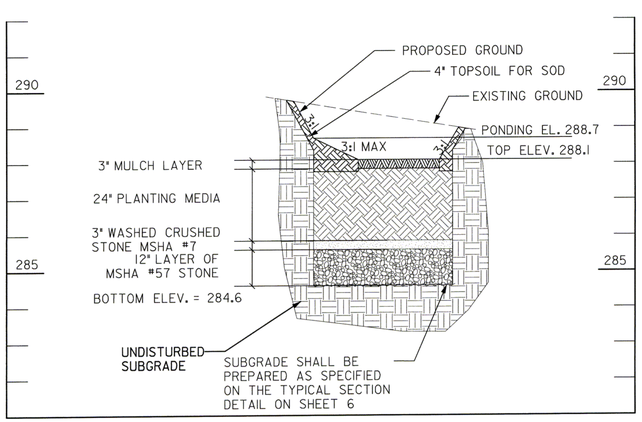

PROFILE (A-A) - RAIN GARDEN FACILITY (BMP 98)

SCALE: HORIZ. 1"=10'
VERT. 1"=2'

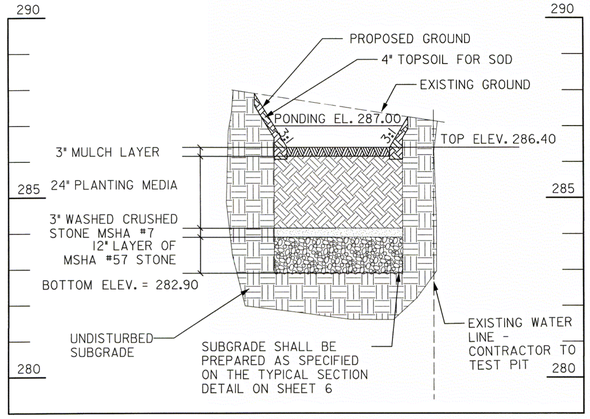

PROFILE (B-B) - RAIN GARDEN FACILITY (BMP 98A)

SCALE: HORIZ. 1"=10'
VERT. 1"=2'

COMBINATION CONC. CURB AND GUTTER		
STA. TO STA.	L.F.	REMARKS
205+75, LT TO 205+89, LT	4	TRANSITION TYPE C TO TYPE A
205+85, LT TO 205+91, LT	6	TYPE A, MC.101.01
205+91, LT TO 206+01, LT	10	TRANSITION TYPE A TO TYPE C
205+12, LT TO 205+22, LT	10	TRANSITION TYPE C TO TYPE A
205+22, LT TO 205+25, LT	2	TYPE A, MC.101.01
205+31, LT TO 205+37, LT	6	TYPE A, MC.101.01
205+37, LT TO 205+47, LT	13	TRANSITION TYPE A TO TYPE C

DRAINAGE STRUCTURE SCHEDULE				
NO	STATION / OFFSET	TC/TG	INV. OUT	REMARKS
OW-980	205+31.8, 18.0' LT	-	-	OBSERVATION WELL
I-16	205+27.5, 12.9' LT	289.20	287.62	MODIFIED CURB INLET
OW-981	205+88.2, 17.4' LT	-	-	OBSERVATION WELL
I-17	205+82.4, 12.9' LT	287.50	285.92	MODIFIED CURB INLET

CONCRETE EDGING				
FROM		TO		QTY
STA	ELEV	STA	ELEV	LF
205+14.75	289.65	205+24.43	289.39	9.7
205+30.42	289.20	205+38.77	288.90	8.3
205+75.73	287.70	205+79.42	287.69	3.7
205+85.42	287.50	205+97.74	287.20	12.3

10' 0 10' 20'
SCALE: 1"=10'

McCORMICK TAYLOR
509 South Exeter Street
4th Floor
Baltimore, Maryland 21202
(410) 662-7400

PLAN AND PROFILE - BMP 98

FRANKLIN KNOLLS-PHASE 3

SLIGO (13th) ELECTION DISTRICT
PARCEL X, SUBDIVISION X, LIBER X FOLIO X
MONTGOMERY COUNTY, MARYLAND

CLIENT: MONTGOMERY COUNTY DEPT OF ENVIRONMENTAL PROTECTION
255 ROCKVILLE PIKE, RM. 120
ROCKVILLE, MD 20850-4166
MR. PAUL BOGLE, P.E.
(240) 777-7757

DESIGN	KCS
DRAFT	WJW
APPROVED	HJD
DATE	JUNE 2015
SCALE	1"=10'

SHEET 21 OF 43

FILE: I:\5162\13 - Roadway LID - Forest Estates and the Four Corners Area\Design\Engineering\PlanSet\FK P3\pHD-P016_FK3_BMP-98.dgn
PLOTTED: Tuesday, June 02, 2015 AT 10:39 AM

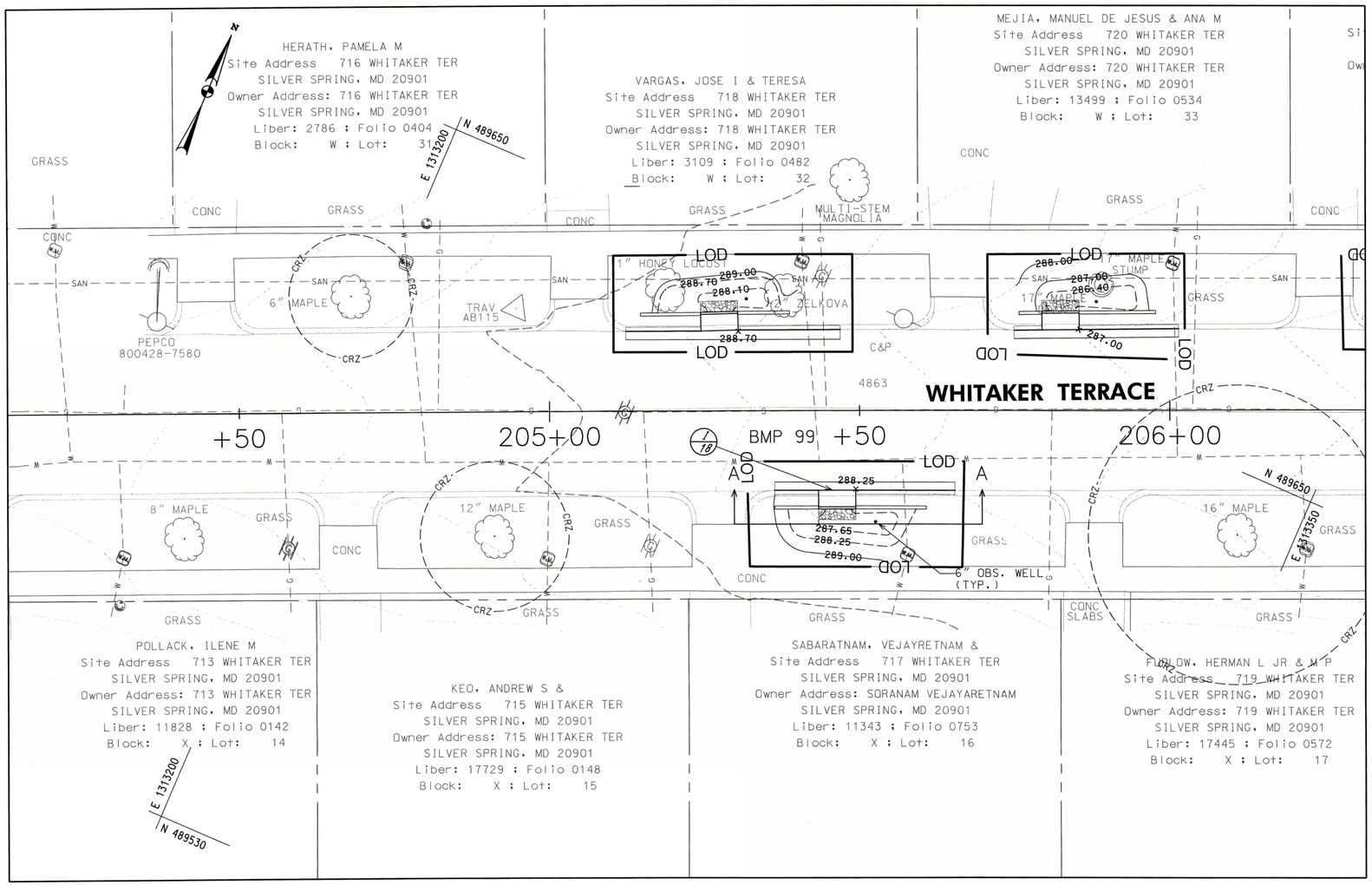

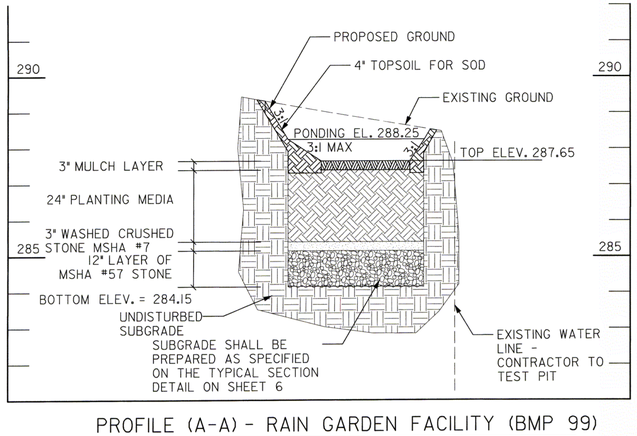

PROFILE (A-A) - RAIN GARDEN FACILITY (BMP 99)

SCALE: HORIZ. 1"=10'
VERT. 1"=2'

AS-BUILT DATA FOR FILTERS (BIORETENTION/RAIN GARDENS)

*TO BE COMPLETED BY THE CERTIFYING ENGINEER

TYPE OF FACILITY: RAIN GARDEN BMP ID: BMP 99

FEATURE	DESIGN	*AS-BUILT
DRAINAGE AREA (AC)	0.59	
TOTAL IMPERVIOUS AREA (AC)	0.28	
TREATMENT VOLUME PROVIDED (CF)	120	
TARGET WQv TREATMENT VOLUME (CF)	1,022	
FILTER BED AREA (SF) [1]	40	
FILTER BED SURFACE ELEVATION	287.65	
DESIGN POINT/MAX. PONDING ELEVATION	288.25	
PONDED WATER SURFACE ELEVATION AREA (SF) [2]	98	
OUTLET PIPE (UNDERDRAIN) SIZE / INVERT ELEV.		
THICKNESS OF FILTER MEDIA	REFER TO PROFILE	
PLACEMENT OF GEOTEXTILE (SIDES ONLY)	REFER TO FACILITY TYP. SECTION – SHEET 6	
PLANTINGS	REFER TO LANDSCAPE PLAN – SHEET 43	
COMPOSITION OF FILTER MEDIA	REFER TO MCDEP SPECIFICATIONS	

*NOTES:

1. "FILTER BED AREA (SF)" REPRESENTS THE EXPOSED SURFACE AREA AT THE PROPOSED "FILTER BED SURFACE ELEVATION".
2. FOR MATERIAL QUANTITY ESTIMATIONS, THE PLANTING MEDIA, STONE, MULCH, ETC. SHOULD BE BASED ON THE AREA OF "PONDED WATER SURFACE ELEVATION AREA (SF)".
3. CONTRACTOR SHALL TEST PIT UTILITIES PRIOR TO CONSTRUCTION. IF UTILITY IS UNAVOIDABLE, CONTRACTOR SHALL REFER TO SHEET 6 FOR UTILITY CROSSING DETAIL WITHIN THE FACILITY.

COMBINATION CONC. CURB AND GUTTER

STA. TO STA.	L.F.	REMARKS
205+36, LT TO 205+43, LT	7	TRANSITION TYPE C TO TYPE A
205+49, LT TO 205+55, LT	6	TYPE A, MC.101.01
206+55, LT TO 205+65, LT	10	TRANSITION TYPE A TO TYPE C

DRAINAGE STRUCTURE SCHEDULE

NO	STATION / OFFSET	TC/TG	INV. OUT	REMARKS
OW-990	205+52.5, 17.8' RT	-	-	OBSERVATION WELL
I-18	205+46.4, 12.8' RT	288.75	287.17	MODIFIED CURB INLET

CONCRETE EDGING

FROM		TO		QTY
STA	ELEV	STA	ELEV	LF
205+36.29	288.95	205+43.36	288.95	7.1
205+49.36	288.75	205+60.71	288.45	11.4

10' 0 10' 20'
SCALE: 1"=10'

McCORMICK TAYLOR
509 South Exeter Street
4th Floor
Baltimore, Maryland 21202
(410) 662-7400

PLAN AND PROFILE - BMP 99

FRANKLIN KNOLLS-PHASE 3

SLIGO (13th) ELECTION DISTRICT
PARCEL X, SUBDIVISION X, LIBER X FOLIO X
MONTGOMERY COUNTY, MARYLAND

CLIENT: MONTGOMERY COUNTY DEPT OF ENVIRONMENTAL PROTECTION
255 ROCKVILLE PIKE, RM. 120
ROCKVILLE, MD 20850-4166
MR. PAUL BOGLE, P.E.
(240) 777-7757

DESIGN	KCS
DRAFT	WJW
APPROVED	HJD
DATE	JUNE 2015
SCALE	1"=10'

SHEET 22 OF 43

FILE: I:\5182\13 - Roadway, LID - Forest Estates and the Four Corners Area\Design\Engineering\PlanSet\FK P3\pltHD-P016_FK3_BMP-99.dgn
PLOTTED: Tuesday, June 02, 2015 AT 10:35 AM

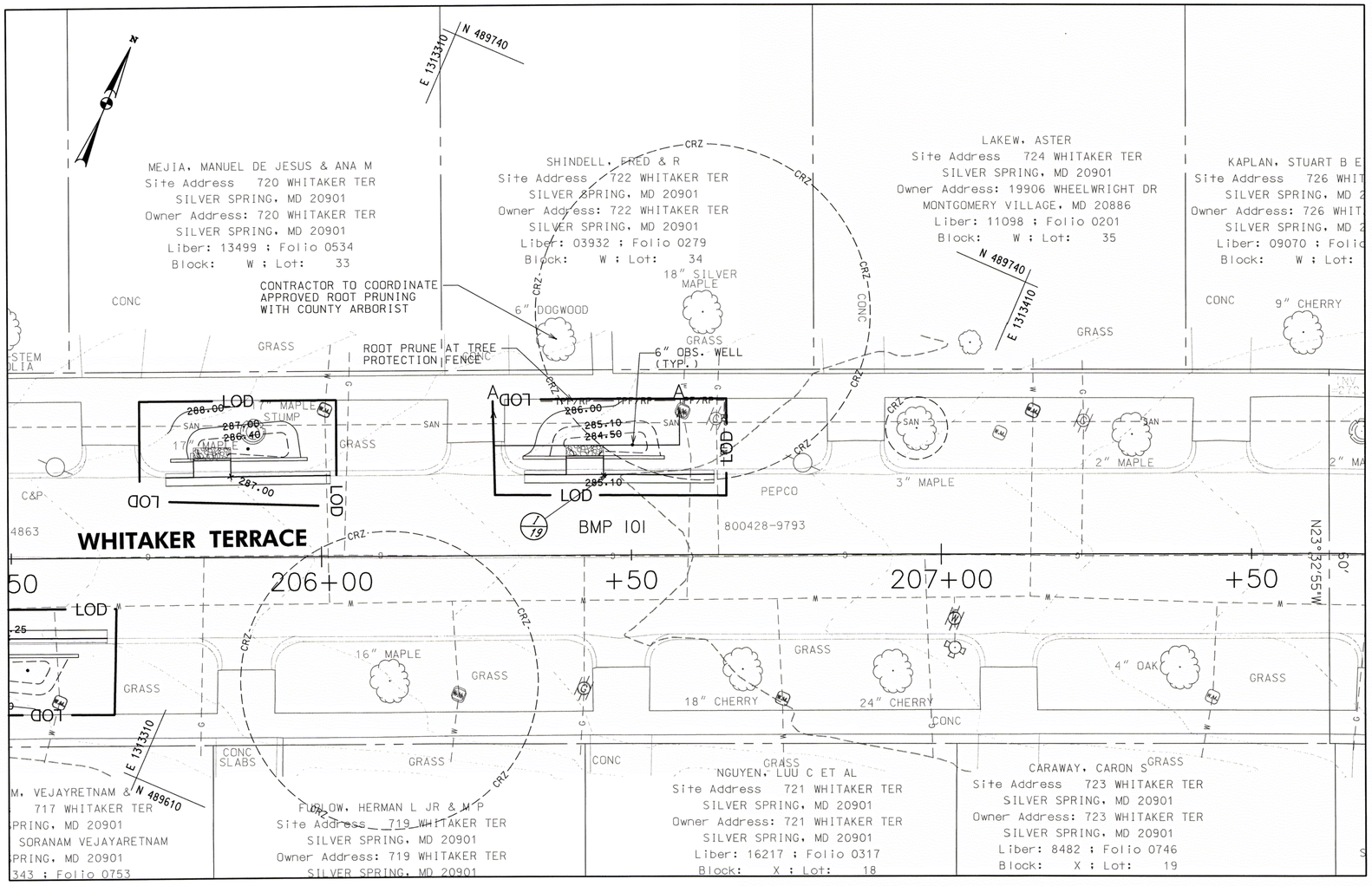

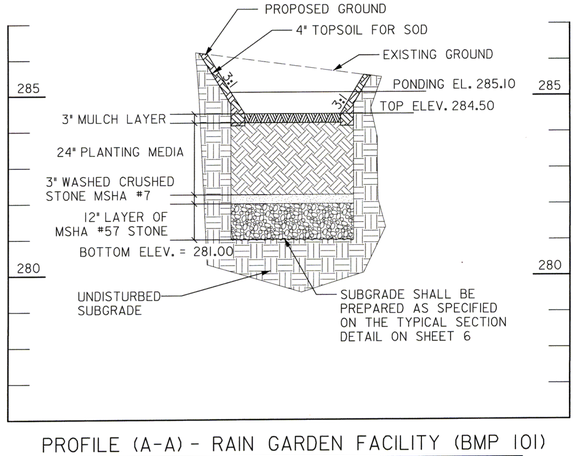

PROFILE (A-A) - RAIN GARDEN FACILITY (BMP 101)

SCALE: HORIZ. 1"=10'
VERT. 1"=2'

AS-BUILT DATA FOR FILTERS (BIORETENTION/RAIN GARDENS)

*TO BE COMPLETED BY THE CERTIFYING ENGINEER

TYPE OF FACILITY: RAIN GARDEN BMP ID: BMP 101

FEATURE	DESIGN	*AS-BUILT
DRAINAGE AREA (AC)	0.09	
TOTAL IMPERVIOUS AREA (AC)	0.04	
TREATMENT VOLUME PROVIDED (CF)	104	
TARGET WQv TREATMENT VOLUME (CF)	258	
FILTER BED AREA (SF) [1]	38	
FILTER BED SURFACE ELEVATION	284.50	
DESIGN POINT/MAX. PONDING ELEVATION	285.10	
PONDED WATER SURFACE ELEVATION AREA (SF) [2]	84	
OUTLET PIPE (UNDERDRAIN) SIZE / INVERT ELEV.		
THICKNESS OF FILTER MEDIA	REFER TO PROFILE	
PLACEMENT OF GEOTEXTILE (SIDES ONLY)	REFER TO FACILITY TYP. SECTION – SHEET 6	
PLANTINGS	REFER TO LANDSCAPE PLAN – SHEET 43	
COMPOSITION OF FILTER MEDIA	REFER TO MCDEP SPECIFICATIONS	

*NOTES:
1. "FILTER BED AREA (SF)" REPRESENTS THE EXPOSED SURFACE AREA AT THE PROPOSED "FILTER BED SURFACE ELEVATION".
2. FOR MATERIAL QUANTITY ESTIMATIONS, THE PLANTING MEDIA, STONE, MULCH, ETC. SHOULD BE BASED ON THE AREA OF "PONDED WATER SURFACE ELEVATION AREA (SF)".
3. CONTRACTOR SHALL TEST PIT UTILITIES PRIOR TO CONSTRUCTION. IF UTILITY IS UNAVOIDABLE, CONTRACTOR SHALL REFER TO SHEET 6 FOR UTILITY CROSSING DETAIL WITHIN THE FACILITY.

COMBINATION CONC. CURB AND GUTTER

STA. TO STA.	L.F.	REMARKS
206+33, LT TO 206+43, LT	10	TRANSITION TYPE C TO TYPE A
206+49, LT TO 206+53, LT	5	TYPE A, MC.101.01
206+53, LT TO 206+63, LT	10	TRANSITION TYPE A TO TYPE C

DRAINAGE STRUCTURE SCHEDULE

NO	STATION / OFFSET	TC/TG	INV. OUT	REMARKS
OW-1010	206+50.2, 17.7' LT	-	-	OBSERVATION WELL
I-19	206+42.5, 12.9' LT	285.60	284.02	MODIFIED CURB INLET

CONCRETE EDGING

FROM		TO		QTY
STA	ELEV	STA	ELEV	LF
206+32.53	285.80	206+39.51	285.43	7.0
206+45.51	285.60	206+55.33	285.30	9.8

10' 0 10' 20'
SCALE: 1"=10'

McCORMICK TAYLOR
509 South Exeter Street
4th Floor
Baltimore, Maryland 21202
(410) 662-7400

PLAN AND PROFILE - BMP 100

FRANKLIN KNOLLS-PHASE 3

SLIGO (13th) ELECTION DISTRICT
PARCEL X, SUBDIVISION X, LIBER X FOLIO X
MONTGOMERY COUNTY, MARYLAND

CLIENT: MONTGOMERY COUNTY DEPT OF ENVIRONMENTAL PROTECTION
255 ROCKVILLE PIKE, RM. 120
ROCKVILLE, MD 20850-4166
MR. PAUL BOGLE, P.E.
(240) 777-7757

DESIGN	KCS
DRAFT	WJW
APPROVED	HJD
DATE	JUNE 2015
SCALE	1"=10'

SHEET 23 OF 43

FILE: 1051013 - Roadway LID - Forest Estates and the Four Corners Area\Design\Engineering\PlanSet\FK P3\pd-P010_FK3_BMP-101.dgn
PLOTTED: Tuesday, June 02, 2015 AT 10:35 AM

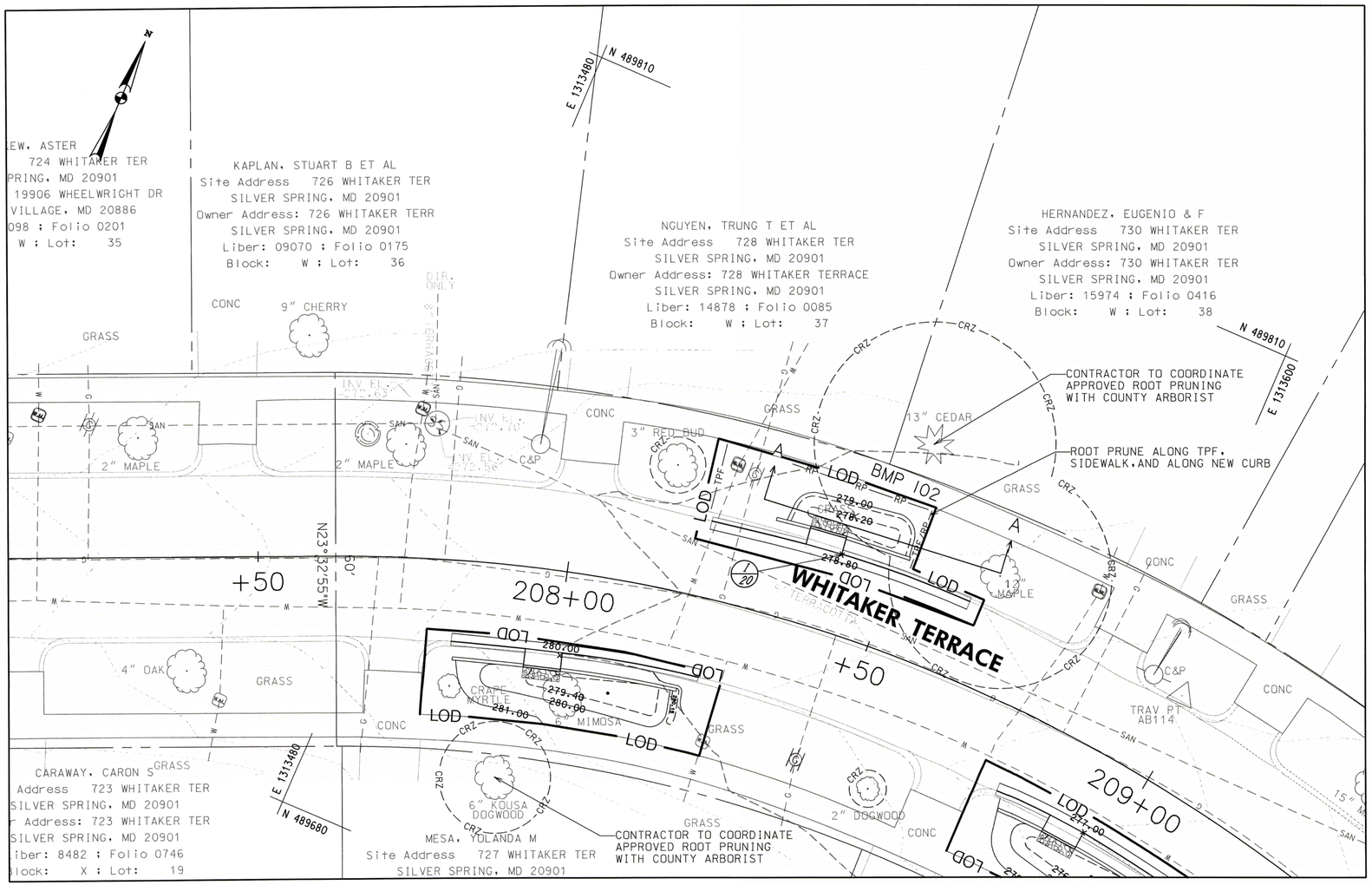

AS-BUILT DATA FOR FILTERS (BIORETENTION/RAIN GARDENS)

*TO BE COMPLETED BY THE CERTIFYING ENGINEER

TYPE OF FACILITY: RAIN GARDEN **BMP ID:** BMP 102

FEATURE	DESIGN	*AS-BUILT
DRAINAGE AREA (AC)	0.25	
TOTAL IMPERVIOUS AREA (AC)	0.10	
TREATMENT VOLUME PROVIDED (CF)	116	
TARGET WQv TREATMENT VOLUME (CF)	372	
FILTER BED AREA (SF) [1]	42	
FILTER BED SURFACE ELEVATION	278.20	
DESIGN POINT/MAX. PONDING ELEVATION	278.80	
PONDED WATER SURFACE ELEVATION AREA (SF) [2]	94	
OUTLET PIPE (UNDERDRAIN) SIZE / INVERT ELEV.		
THICKNESS OF FILTER MEDIA	REFER TO PROFILE	
PLACEMENT OF GEOTEXTILE (SIDES ONLY)	REFER TO FACILITY TYP. SECTION – SHEET 6	
PLANTINGS	REFER TO LANDSCAPE PLAN – SHEET 43	
COMPOSITION OF FILTER MEDIA	REFER TO MCDEP SPECIFICATIONS	

*NOTES:
1. "FILTER BED AREA (SF)" REPRESENTS THE EXPOSED SURFACE AREA AT THE PROPOSED "FILTER BED SURFACE ELEVATION".
2. FOR MATERIAL QUANTITY ESTIMATIONS, THE PLANTING MEDIA, STONE, MULCH, ETC. SHOULD BE BASED ON THE AREA OF "PONDED WATER SURFACE ELEVATION AREA (SF)".
3. CONTRACTOR SHALL TEST PIT UTILITIES PRIOR TO CONSTRUCTION. IF UTILITY IS UNAVOIDABLE, CONTRACTOR SHALL REFER TO SHEET 6 FOR UTILITY CROSSING DETAIL WITHIN THE FACILITY.

COMBINATION CONC. CURB AND GUTTER

STA. TO STA.	L.F.	REMARKS
208+21, LT TO 208+31, LT	10	TRANSITION TYPE C TO TYPE A
208+31, LT TO 208+41, LT	11	TYPE A, MC.101.01
208+46, LT TO 208+53, LT	7	TYPE A, MC.101.01
208+53, LT TO 208+63, LT	10	TRANSITION TYPE A TO TYPE C

DRAINAGE STRUCTURE SCHEDULE

NO	STATION / OFFSET	TC/TG	INV. OUT	REMARKS
OW-1020	208+39.2, 17.4' LT	-	-	OBSERVATION WELL
I-20	208+43.5, 12.7' LT	279.10	277.52	MODIFIED CURB INLET

CONCRETE EDGING

FROM		TO		QTY
STA	ELEV	STA	ELEV	LF
208+30.49	279.65	208+35.81	279.29	5.6
208+41.46	279.10	208+51.64	278.75	10.8

NOTE: CONTRACTOR SHALL INSTALL ALL CURB AND GUTTER AND CONCRETE EDGING AT EXISTING ARC ALIGNMENT

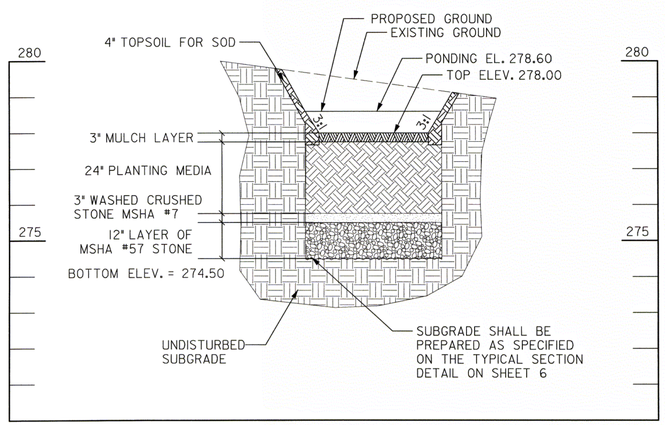

PROFILE (A-A) - RAIN GARDEN FACILITY (BMP 102)

SCALE: HORIZ. 1"=10'
VERT. 1"=2'

10' 0 10' 20'
SCALE: 1"=10'

McCORMICK TAYLOR
509 South Exeter Street
4th Floor
Baltimore, Maryland 21202
(410) 662-7400

PLAN AND PROFILE - BMP 102

FRANKLIN KNOLLS-PHASE 3

SLIGO (13th) ELECTION DISTRICT
PARCEL X, SUBDIVISION X, LIBER X FOLIO X
MONTGOMERY COUNTY, MARYLAND

CLIENT: MONTGOMERY COUNTY DEPT OF ENVIRONMENTAL PROTECTION
255 ROCKVILLE PIKE, RM. 120
ROCKVILLE, MD 20850-4166
MR. PAUL BOGLE, P.E.
(240) 777-7757

DESIGN	KCS
DRAFT	WJW
APPROVED	HJD
DATE	JUNE 2015
SCALE	1"=10'

SHEET 24 OF 43

FILE: I:\15\15213 - Rowley LID – Forest Estates and the Four Corners Area\Design\Engineering\PlanSet\FK P3\pdf\D-P020_FK3_BMP-102.dgn
PLOTTED: Tuesday, June 02, 2015 AT 10:35 AM

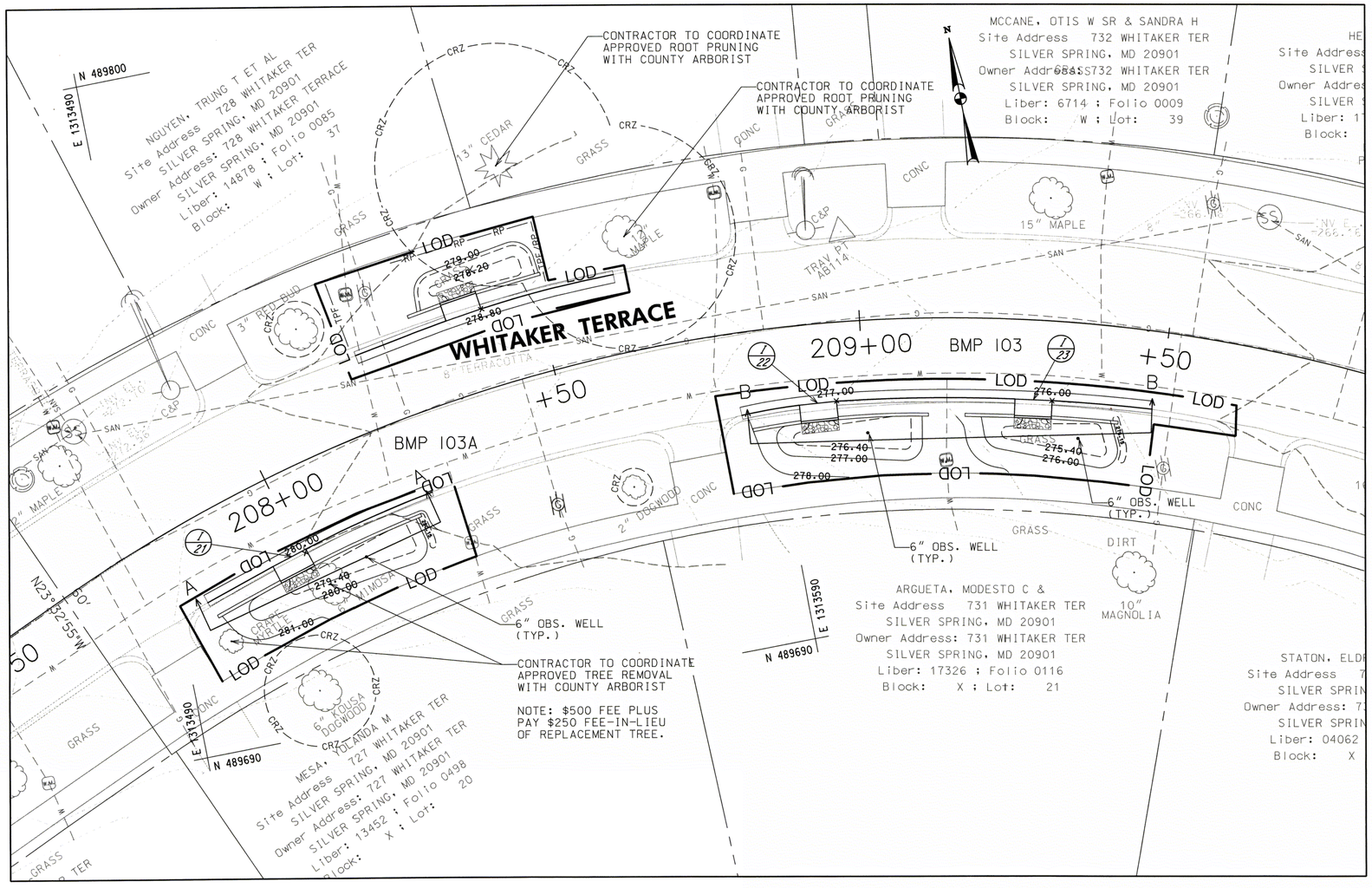

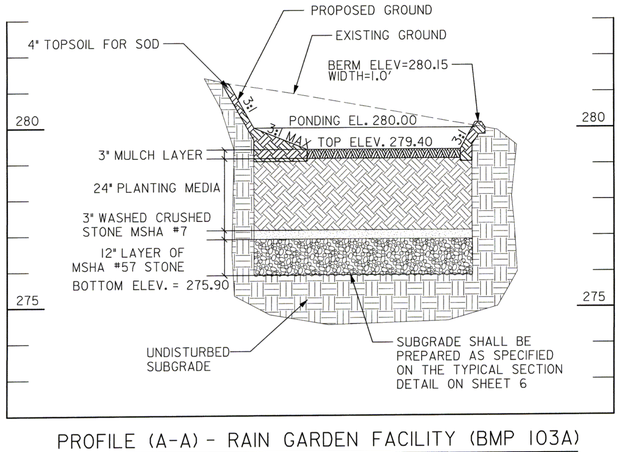

PROFILE (A-A) - RAIN GARDEN FACILITY (BMP 103A)

SCALE: HORIZ. 1"=10'
VERT. 1"=2'

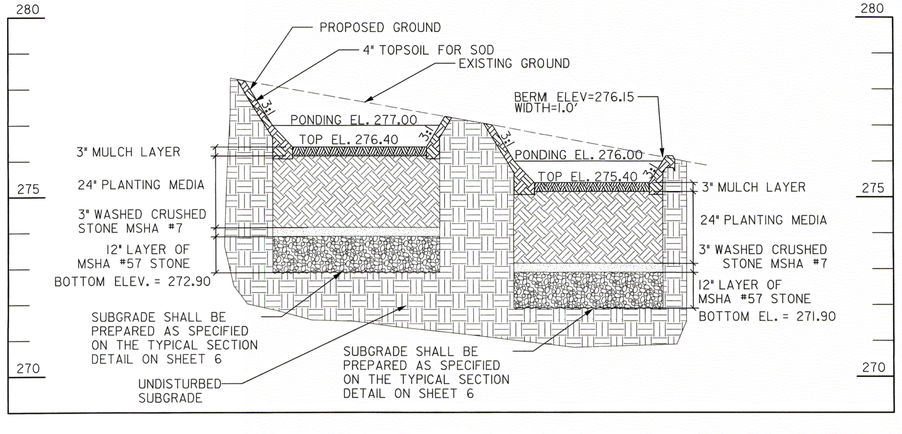

PROFILE (B-B) - RAIN GARDEN FACILITY (BMP 103)

SCALE: HORIZ. 1"=10'
VERT. 1"=2'

AS-BUILT DATA FOR FILTERS (BIORETENTION/RAIN GARDENS)

*TO BE COMPLETED BY THE CERTIFYING ENGINEER

TYPE OF FACILITY: RAIN GARDEN — BMP ID: BMP 103 /103A

FEATURE	DESIGN	*AS-BUILT
DRAINAGE AREA (AC)	0.80	
TOTAL IMPERVIOUS AREA (AC)	0.39	
TREATMENT VOLUME PROVIDED (CF)	537	
TARGET WQv TREATMENT VOLUME (CF)	1,419	
FILTER BED AREA (SF) [1]	217	
FILTER BED SURFACE ELEVATION	279.40, 276.40, 275.40	
DESIGN POINT/MAX. PONDING ELEVATION	280.00, 277.00, 276.00	
PONDED WATER SURFACE ELEVATION AREA (SF) [2]	429	
OUTLET PIPE (UNDERDRAIN) SIZE / INVERT ELEV.		
THICKNESS OF FILTER MEDIA	REFER TO PROFILE	
PLACEMENT OF GEOTEXTILE (SIDES ONLY)	REFER TO FACILITY TYP. SECTION – SHEET 6	
PLANTINGS	REFER TO LANDSCAPE PLAN – SHEET 43	
COMPOSITION OF FILTER MEDIA	REFER TO MCDEP SPECIFICATIONS	

*NOTES:
1. "FILTER BED AREA (SF)" REPRESENTS THE EXPOSED SURFACE AREA AT THE PROPOSED "FILTER BED SURFACE ELEVATION".
2. FOR MATERIAL QUANTITY ESTIMATIONS, THE PLANTING MEDIA, STONE, MULCH, ETC. SHOULD BE BASED ON THE AREA OF "PONDED WATER SURFACE ELEVATION AREA (SF)".
3. CONTRACTOR SHALL TEST PIT UTILITIES PRIOR TO CONSTRUCTION. IF UTILITY IS UNAVOIDABLE, CONTRACTOR SHALL REFER TO SHEET 6 FOR UTILITY CROSSING DETAIL WITHIN THE FACILITY.

COMBINATION CONC. CURB AND GUTTER

STA. TO STA.	L.F.	REMARKS
207+82, RT TO 207+92, RT	10	TRANSITION TYPE C TO TYPE A
207+92, RT TO 207+95, RT	3	TYPE A, MC.101.01
208+01, RT TO 208+13, RT	12	TRANSITION TYPE A TO TYPE C
208+13, RT TO 208+23, RT	10	TRANSITION TYPE C TO TYPE A
208+23, RT TO 208+15, RT	12	TYPE A, MC.101.01
208+15, RT TO 208+25, RT	10	TRANSITION TYPE A TO TYPE C
208+79, RT TO 208+89, RT	10	TRANSITION TYPE C TO TYPE A
208+95, RT TO 209+26, RT	31	TYPE A, MC.101.01
209+32, RT TO 209+39, RT	7	TYPE A, MC.101.01
209+39, RT TO 209+49, RT	10	TRANSITION TYPE A TO TYPE C

DRAINAGE STRUCTURE SCHEDULE

NO	STATION / OFFSET	TC/TG	INV. OUT	REMARKS
OW-1030	208+10.0, 18.2' RT	-	-	OBSERVATION WELL
I-21	207+98.0, 13.1' RT	280.50	278.92	MODIFIED CURB INLET
OW-1031	209+00.2, 18.1' RT	-	-	OBSERVATION WELL
I-22	208+92.1, 12.8' RT	277.50	275.92	MODIFIED CURB INLET
OW-1032	209+36.8, 18.5' RT	-	-	OBSERVATION WELL
I-23	209+28.7, 12.8' RT	276.50	274.92	MODIFIED CURB INLET

CONCRETE EDGING

FROM		TO		QTY
STA	ELEV	STA	ELEV	LF
207+82.52	281.15	207+94.82	280.71	11.5
208+01.22	280.50	208+21.46	280.15	19.0
208+80.54	277.95	208+88.92	277.64	7.9
208+95.32	277.50	209+10.83	277.15	14.6
209+17.14	276.80	209+25.56	276.69	7.9
209+31.96	276.50	209+43.43	276.15	10.8

NOTE: CONTRACTOR SHALL INSTALL ALL CURB AND GUTTER AND CONCRETE EDGING AT EXISTING ARC ALIGNMENT

10' 0 10' 20'
SCALE: 1"=10'

McCORMICK TAYLOR
509 South Exeter Street
4th Floor
Baltimore, Maryland 21202
(410) 662-7400

PLAN AND PROFILE - BMP 103A & 103

FRANKLIN KNOLLS-PHASE 3

SLIGO (13th) ELECTION DISTRICT
PARCEL X, SUBDIVISION X, LIBER X FOLIO X
MONTGOMERY COUNTY, MARYLAND

CLIENT: MONTGOMERY COUNTY DEPT OF ENVIRONMENTAL PROTECTION
255 ROCKVILLE PIKE, RM. 120
ROCKVILLE, MD 20850-4166
MR. PAUL BOGLE, P.E.
(240) 777-7757

DESIGN	KCS
DRAFT	WJW
APPROVED	HJD
DATE	JUNE 2015
SCALE	1"=10'

SHEET 25 OF 43

FILE: 1:\5192\13 - Roadway, LID – Forest Edaties and the Four Corners Area\Design\Engineering\PlanSet\FK P3\pdf\D-P021_FK3_BMP-103_103A.dgn
PLOTTED: Tuesday, June 02, 2015 AT 10:35 AM

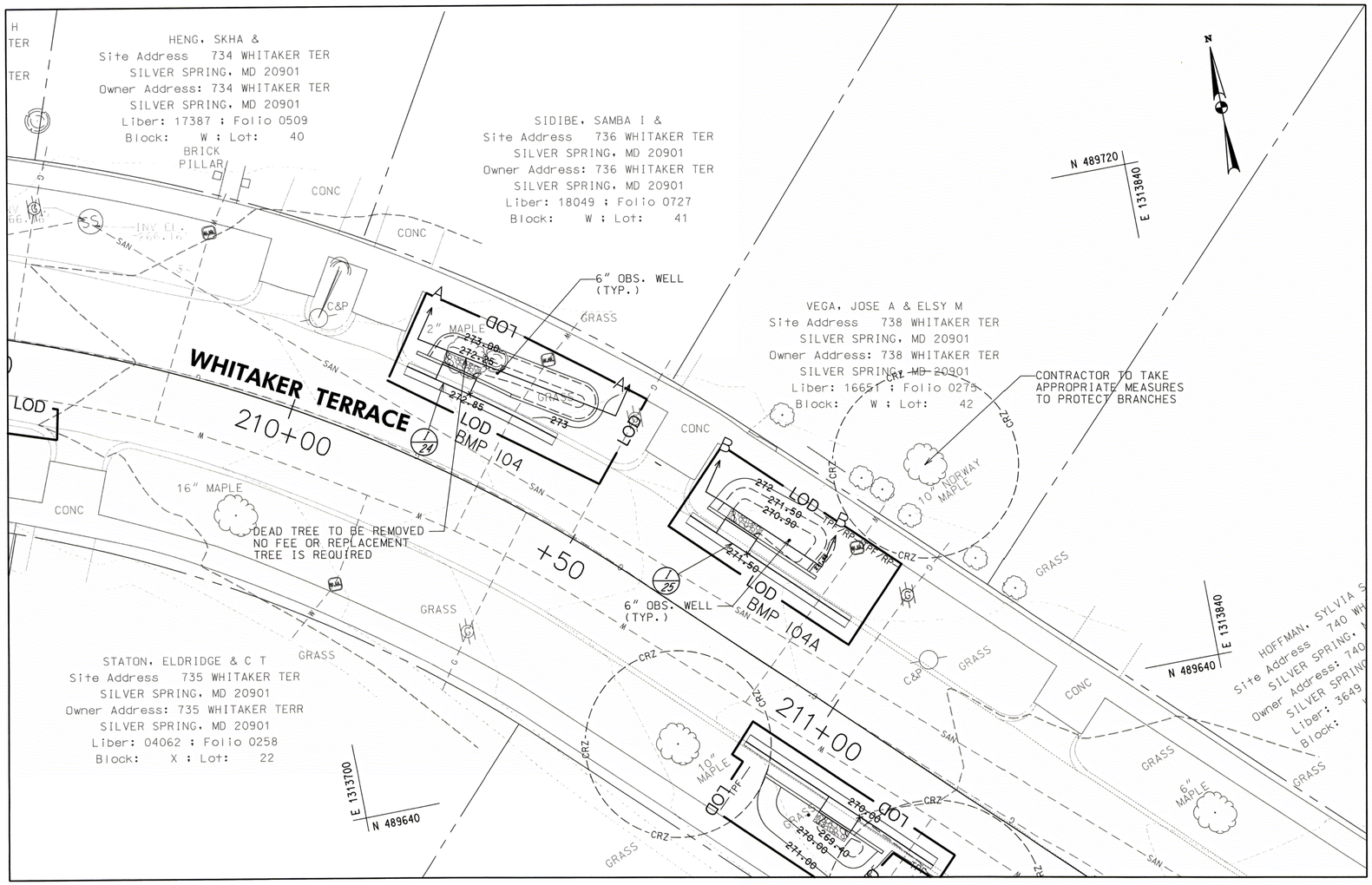

PROFILE (A-A) - RAIN GARDEN FACILITY (BMP 104)

SCALE: HORIZ. 1"=10'
VERT. 1"=2'

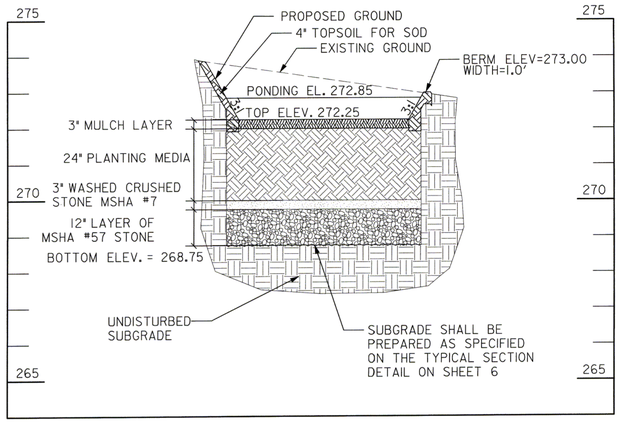

PROFILE (B-B) - RAIN GARDEN FACILITY (BMP 104A)

SCALE: HORIZ. 1"=10'
VERT. 1"=2'

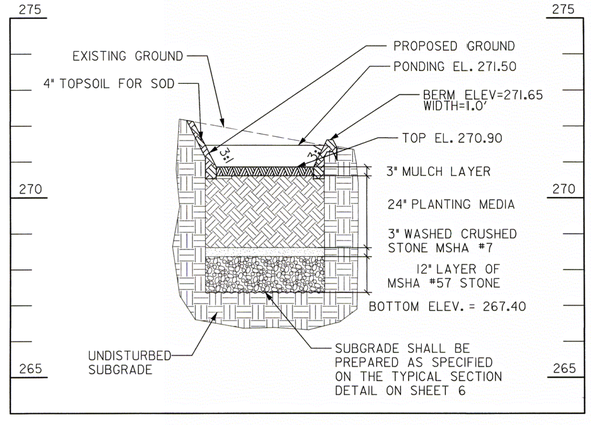

AS-BUILT DATA FOR FILTERS (BIORETENTION/RAIN GARDENS)

*TO BE COMPLETED BY THE CERTIFYING ENGINEER

TYPE OF FACILITY: RAIN GARDEN — BMP ID: BMP 104 / 104A

FEATURE	DESIGN	*AS-BUILT
DRAINAGE AREA (AC)	0.45	
TOTAL IMPERVIOUS AREA (AC)	0.22	
TREATMENT VOLUME PROVIDED (CF)	309	
TARGET WQv TREATMENT VOLUME (CF)	800	
FILTER BED AREA (SF) [1]	114	
FILTER BED SURFACE ELEVATION	272.25, 270.90	
DESIGN POINT/MAX. PONDING ELEVATION	272.85, 271.50	
PONDED WATER SURFACE ELEVATION AREA (SF) [2]	250	
OUTLET PIPE (UNDERDRAIN) SIZE / INVERT ELEV.		
THICKNESS OF FILTER MEDIA	REFER TO PROFILE	
PLACEMENT OF GEOTEXTILE (SIDES ONLY)	REFER TO FACILITY TYP. SECTION – SHEET 6	
PLANTINGS	REFER TO LANDSCAPE PLAN – SHEET 43	
COMPOSITION OF FILTER MEDIA	REFER TO MCDEP SPECIFICATIONS	

*NOTES:
1. "FILTER BED AREA (SF)" REPRESENTS THE EXPOSED SURFACE AREA AT THE PROPOSED "FILTER BED SURFACE ELEVATION".
2. FOR MATERIAL QUANTITY ESTIMATIONS, THE PLANTING MEDIA, STONE, MULCH, ETC. SHOULD BE BASED ON THE AREA OF "PONDED WATER SURFACE ELEVATION AREA (SF)".
3. CONTRACTOR SHALL TEST PIT UTILITIES PRIOR TO CONSTRUCTION. IF UTILITY IS UNAVOIDABLE, CONTRACTOR SHALL REFER TO SHEET 6 FOR UTILITY CROSSING DETAIL WITHIN THE FACILITY.

COMBINATION CONC. CURB AND GUTTER

STA. TO STA.	L.F.	REMARKS
210+15, LT TO 210+19, LT	5	TRANSITION TYPE C TO TYPE A
210+25, LT TO 210+30, LT	6	TYPE A, MC.101.01
210+30, LT TO 210+40, LT	10	TRANSITION TYPE A TO TYPE C
210+64, LT TO 210+69, LT	5	TRANSITION TYPE C TO TYPE A
210+75, LT TO 210+84, LT	10	TYPE A, MC.101.01
210+84, LT TO 210+94, LT	10	TRANSITION TYPE A TO TYPE C

DRAINAGE STRUCTURE SCHEDULE

NO	STATION / OFFSET	TC/TG	INV. OUT	REMARKS
OW-1040	210+27.6, 17.8' LT	-	-	OBSERVATION WELL
I-24	210+22.2, 12.8' LT	273.35	271.77	MODIFIED CURB INLET
OW-1041	210+79.3, 18.7' LT	-	-	OBSERVATION WELL
I-25	210+71.8, 13.2' LT	272.00	270.42	MODIFIED CURB INLET

CONCRETE EDGING

FROM		TO		QTY
STA	ELEV	STA	ELEV	LF
210+15.19	273.55	210+19.43	273.52	4.5
210+25.08	273.35	210+30.86	273.10	6.1
210+65.45	272.00	210+68.82	272.18	3.4
210+74.82	272.00	210+86.16	271.65	11.3

NOTE: CONTRACTOR SHALL INSTALL ALL CURB AND GUTTER AND CONCRETE EDGING AT EXISTING ARC ALIGNMENT

10' 0 10' 20'
SCALE: 1"=10'

McCORMICK TAYLOR
509 South Exeter Street
4th Floor
Baltimore, Maryland 21202
(410) 662-7400

PLAN AND PROFILE - BMP 104 & 104A

FRANKLIN KNOLLS-PHASE 3

SLIGO (13th) ELECTION DISTRICT
PARCEL X, SUBDIVISION X, LIBER X FOLIO X
MONTGOMERY COUNTY, MARYLAND

CLIENT: MONTGOMERY COUNTY DEPT OF ENVIRONMENTAL PROTECTION
255 ROCKVILLE PIKE, RM. 120
ROCKVILLE, MD 20850-4166
MR. PAUL BOGLE, P.E.
(240) 777-7757

DESIGN	KCS
DRAFT	WJW
APPROVED	HJD
DATE	JUNE 2015
SCALE	1"=10'

SHEET 26 OF 43

FILE: I:\415\01\1 Roadway\LD - Forest Eastern and the Four Corners Area\Design\Engineering\Plan Sheet\Fr. P3\phil\D-P2C1_FK3_BMP-104_104A.dgn
PLOTTED: Tuesday, June 02, 2015 AT 10:35 AM

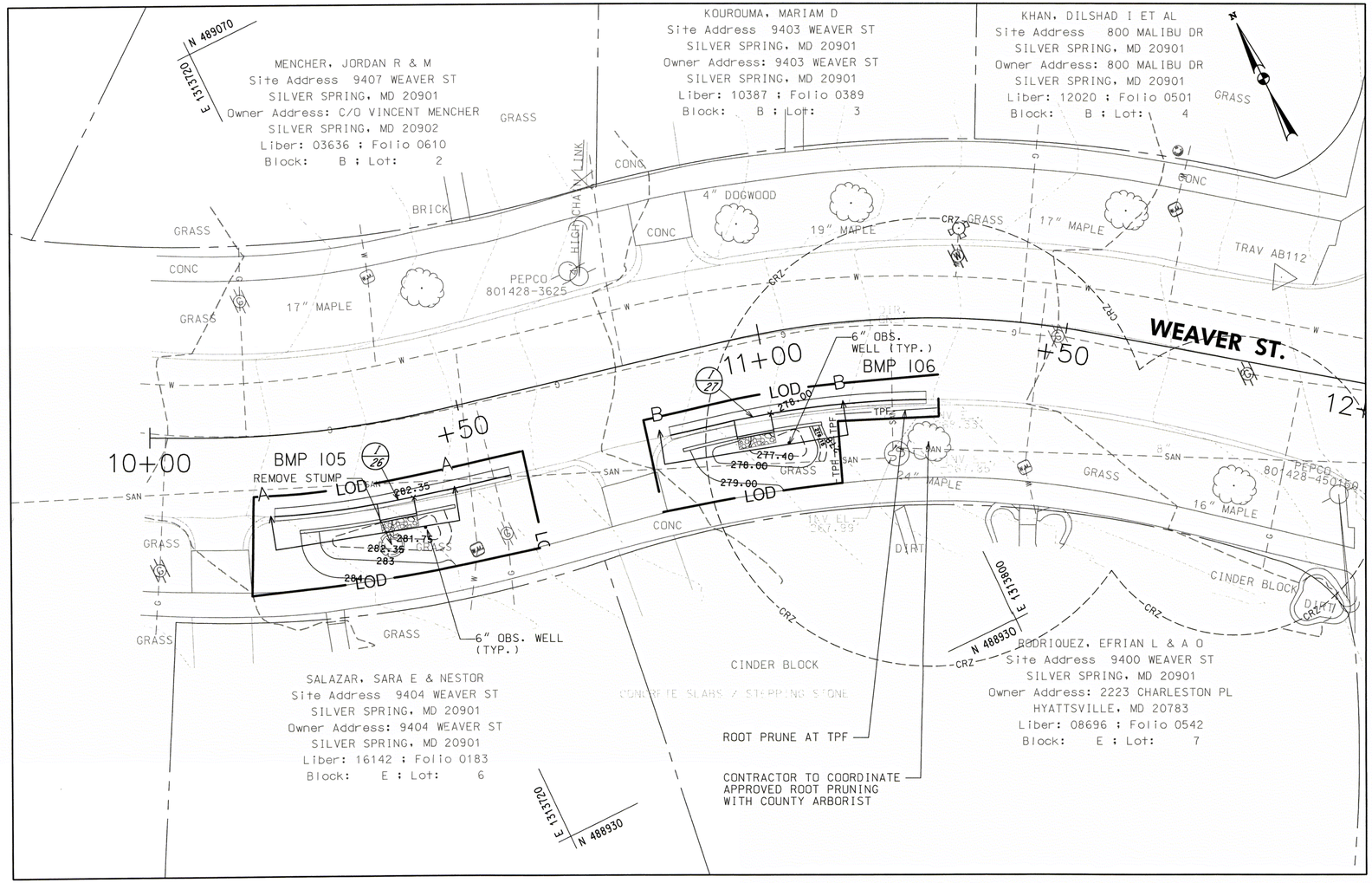

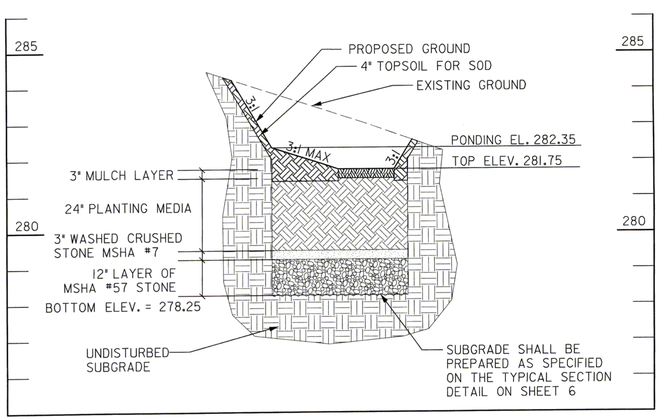

PROFILE (A-A) - RAIN GARDEN FACILITY (BMP 105)

SCALE: HORIZ. 1"=10'
VERT. 1"=2'

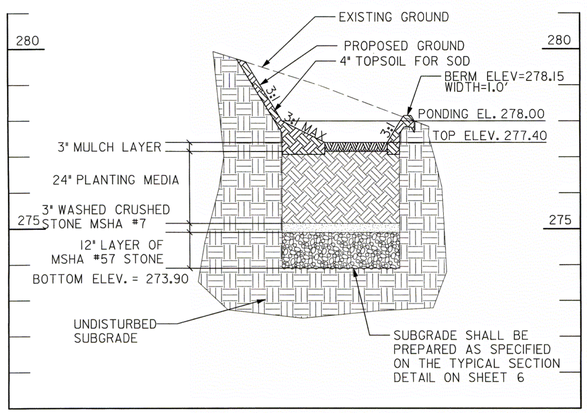

PROFILE (B-B) - RAIN GARDEN FACILITY (BMP 106)

SCALE: HORIZ. 1"=10'
VERT. 1"=2'

AS-BUILT DATA FOR FILTERS (BIORETENTION/RAIN GARDENS)

*TO BE COMPLETED BY THE CERTIFYING ENGINEER

TYPE OF FACILITY: RAIN GARDEN — BMP ID: BMP 105

FEATURE	DESIGN	*AS-BUILT
DRAINAGE AREA (AC)	0.87	
TOTAL IMPERVIOUS AREA (AC)	0.35	
TREATMENT VOLUME PROVIDED (CF)	98	
TARGET WQv TREATMENT VOLUME (CF)	1,301	
FILTER BED AREA (SF) [1]	26	
FILTER BED SURFACE ELEVATION	281.75	
DESIGN POINT/MAX. PONDING ELEVATION	282.35	
PONDED WATER SURFACE ELEVATION AREA (SF) [2]	82	
OUTLET PIPE (UNDERDRAIN) SIZE / INVERT ELEV.		
THICKNESS OF FILTER MEDIA	REFER TO PROFILE	
PLACEMENT OF GEOTEXTILE (SIDES ONLY)	REFER TO FACILITY TYP. SECTION – SHEET 6	
PLANTINGS	REFER TO LANDSCAPE PLAN – SHEET 43	
COMPOSITION OF FILTER MEDIA	REFER TO MCDEP SPECIFICATIONS	

*NOTES:

1. "FILTER BED AREA (SF)" REPRESENTS THE EXPOSED SURFACE AREA AT THE PROPOSED "FILTER BED SURFACE ELEVATION".
2. FOR MATERIAL QUANTITY ESTIMATIONS, THE PLANTING MEDIA, STONE, MULCH, ETC. SHOULD BE BASED ON THE AREA OF "PONDED WATER SURFACE ELEVATION AREA (SF)".
3. CONTRACTOR SHALL TEST PIT UTILITIES PRIOR TO CONSTRUCTION. IF UTILITY IS UNAVOIDABLE, CONTRACTOR SHALL REFER TO SHEET 6 FOR UTILITY CROSSING DETAIL WITHIN THE FACILITY.

AS-BUILT DATA FOR FILTERS (BIORETENTION/RAIN GARDENS)

*TO BE COMPLETED BY THE CERTIFYING ENGINEER

TYPE OF FACILITY: RAIN GARDEN — BMP ID: BMP 106

FEATURE	DESIGN	*AS-BUILT
DRAINAGE AREA (AC)	0.10	
TOTAL IMPERVIOUS AREA (AC)	0.05	
TREATMENT VOLUME PROVIDED (CF)	96	
TARGET WQv TREATMENT VOLUME (CF)	182	
FILTER BED AREA (SF) [1]	30	
FILTER BED SURFACE ELEVATION	277.40	
DESIGN POINT/MAX. PONDING ELEVATION	278.00	
PONDED WATER SURFACE ELEVATION AREA (SF) [2]	79	
OUTLET PIPE (UNDERDRAIN) SIZE / INVERT ELEV.		
THICKNESS OF FILTER MEDIA	REFER TO PROFILE	
PLACEMENT OF GEOTEXTILE (SIDES ONLY)	REFER TO FACILITY TYP. SECTION – SHEET 6	
PLANTINGS	REFER TO LANDSCAPE PLAN – SHEET 43	
COMPOSITION OF FILTER MEDIA	REFER TO MCDEP SPECIFICATIONS	

COMBINATION CONC. CURB AND GUTTER

STA. TO STA.	L.F.	REMARKS
10+19, RT TO 10+29, RT	10	TRANSITION TYPE C TO TYPE A
10+29, RT TO 10+35, RT	6	TYPE A, MC.101.01
10+40, RT TO 10+46, RT	6	TYPE A, MC.101.01
10+46, RT TO 10+56, RT	10	TRANSITION TYPE A TO TYPE C
10+82, RT TO 10+93, RT	11	TRANSITION TYPE C TO TYPE A
10+99, RT TO 11+16, RT	15	TYPE A, MC.101.01
11+16, RT TO 11+27, RT	10	TRANSITION TYPE A TO TYPE C

STATION / OFFSET	TC/TG	INV. OUT	REMARKS
10+37.5, 12.8' RT	-	-	OBSERVATION WELL
10+41.2, 18.0' RT	282.85	281.27	MODIFIED CURB INLET
11+01.8, 18.0' RT	-	-	OBSERVATION WELL
10+96.1, 12.8' RT	278.50	276.92	MODIFIED CURB INLET

CONCRETE EDGING

FROM		TO		QTY
STA	ELEV	STA	ELEV	LF
10+22.82	284.05	10+34.77	283.22	13.1
10+40.25	282.85	10+45.98	282.50	6.3
10+83.92	279.30	10+92.86	278.91	8.9
10+99.42	278.50	11+08.15	278.15	7.8

NOTE: CONTRACTOR SHALL INSTALL ALL CURB AND GUTTER AND CONCRETE EDGING AT EXISTING ARC ALIGNMENT

10' 0 10' 20'
SCALE: 1"=10'

McCORMICK TAYLOR
509 South Exeter Street
4th Floor
Baltimore, Maryland 21202
(410) 662-7400

PLAN AND PROFILE - BMP 105 & 106

FRANKLIN KNOLLS-PHASE 3

SLIGO (13th) ELECTION DISTRICT
PARCEL X, SUBDIVISION X, LIBER X FOLIO X
MONTGOMERY COUNTY, MARYLAND

CLIENT: MONTGOMERY COUNTY DEPT OF ENVIRONMENTAL PROTECTION
255 ROCKVILLE PIKE, RM. 120
ROCKVILLE, MD 20850-4166
MR. PAUL BOGLE, P.E.
(240) 777-7757

DESIGN	KCS	DRAFT	WJW	APPROVED	HJD	DATE	JUNE 2015	SCALE	1"=10'

SHEET 27 OF 43

E:\E\15\01\013, Roadway\10 - Forest Edges and the Four Corners Area\Design\Engineering\PlanSet\FK P3\pr\D-P022_PK3_BMP-105_106.dgn
PLOTTED: Tuesday, June 02, 2015 AT 10:35 AM

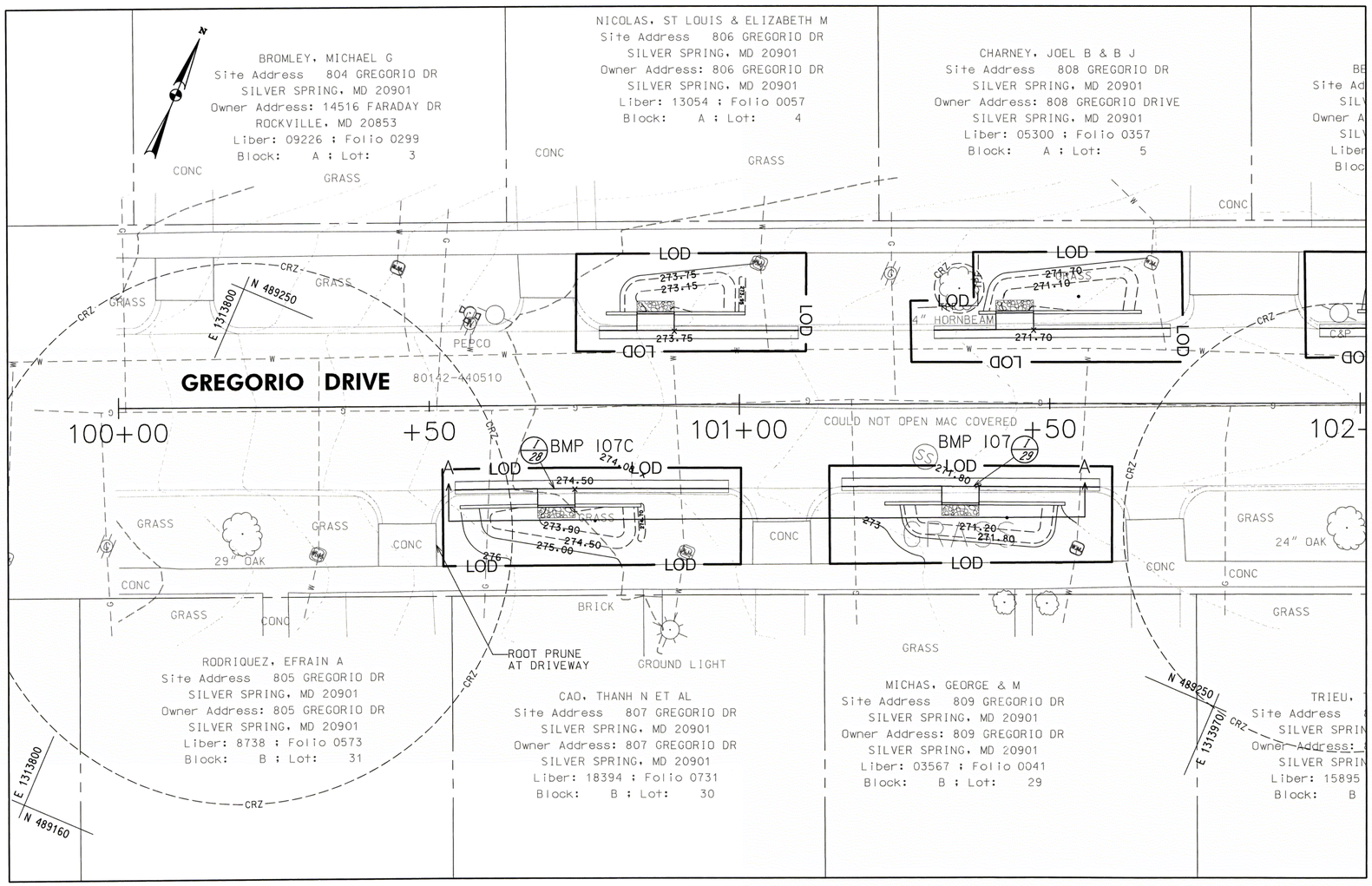

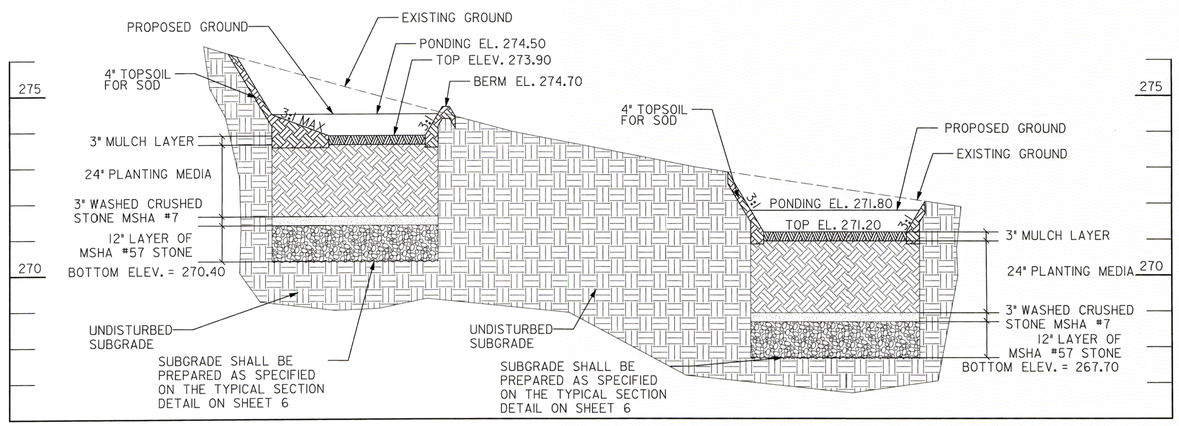

PROFILE (A-A) - RAIN GARDEN FACILITY (BMP 107, 107C)

SCALE: HORIZ. 1"=10'
VERT. 1"=2'

AS-BUILT DATA FOR FILTERS (BIORETENTION/RAIN GARDENS)

*TO BE COMPLETED BY THE CERTIFYING ENGINEER

TYPE OF FACILITY: RAIN GARDEN — BMP ID: BMP 107 /107C

FEATURE	DESIGN	*AS-BUILT
DRAINAGE AREA (AC)	0.25	
TOTAL IMPERVIOUS AREA (AC)	0.13	
TREATMENT VOLUME PROVIDED (CF)	300	
TARGET WQv TREATMENT VOLUME (CF)	470	
FILTER BED AREA (SF) [1]	121	
FILTER BED SURFACE ELEVATION	271.20, 273.90	
DESIGN POINT/MAX. PONDING ELEVATION	271.80, 274.50	
PONDED WATER SURFACE ELEVATION AREA (SF) [2]	240	
OUTLET PIPE (UNDERDRAIN) SIZE / INVERT ELEV.		
THICKNESS OF FILTER MEDIA	REFER TO PROFILE	
PLACEMENT OF GEOTEXTILE (SIDES ONLY)	REFER TO FACILITY TYP. SECTION – SHEET 6	
PLANTINGS	REFER TO LANDSCAPE PLAN – SHEET 43	
COMPOSITION OF FILTER MEDIA	REFER TO MCDEP SPECIFICATIONS	

*NOTES:
1. "FILTER BED AREA (SF)" REPRESENTS THE EXPOSED SURFACE AREA AT THE PROPOSED "FILTER BED SURFACE ELEVATION".
2. FOR MATERIAL QUANTITY ESTIMATIONS, THE PLANTING MEDIA, STONE, MULCH, ETC. SHOULD BE BASED ON THE AREA OF "PONDED WATER SURFACE ELEVATION AREA (SF)".
3. CONTRACTOR SHALL TEST PIT UTILITIES PRIOR TO CONSTRUCTION. IF UTILITY IS UNAVOIDABLE, CONTRACTOR SHALL REFER TO SHEET 6 FOR UTILITY CROSSING DETAIL WITHIN THE FACILITY.

COMBINATION CONC. CURB AND GUTTER

STA. TO STA.	L.F.	REMARKS
100+54, RT TO 100+64, RT	10	TRANSITION TYPE C TO TYPE A
100+64, RT TO 100+67, RT	3	TYPE A, MC.101.01
100+73, RT TO 100+88, RT	15	TYPE A, MC.101.01
100+88, RT TO 100+98, RT	10	TRANSITION TYPE A TO TYPE C
101+16, RT TO 101+26, RT	10	TRANSITION TYPE C TO TYPE A
101+26, RT TO 101+33, RT	6	TYPE A, MC.101.01
101+39, RT TO 101+48, RT	9	TYPE A, MC.101.01
101+48, RT TO 101+58, RT	10	TRANSITION TYPE A TO TYPE C

DRAINAGE STRUCTURE SCHEDULE

NO	STATION / OFFSET	TC/TG	INV. OUT	REMARKS
OW-1070	100+76.7, 18.6' RT	-	-	OBSERVATION WELL
I-28	100+70.4, 13.4' RT	275.00	273.42	MODIFIED CURB INLET
OW-1071	101+43.0, 18.2' RT	-	-	OBSERVATION WELL
I-29	101+35.6, 13.2' RT	272.30	270.72	MODIFIED CURB INLET

CONCRETE EDGING

FROM		TO		QTY
STA	ELEV	STA	ELEV	LF
100+54.90	276.00	100+67.41	275.32	12.5
100+73.41	275.00	100+84.06	274.15	10.7
101+23.38	272.80	101+32.56	272.48	9.2
101+38.56	272.30	101+52.36	271.95	13.8

10' 0 10' 20'
SCALE: 1"=10'

McCORMICK TAYLOR
509 South Exeter Street
4th Floor
Baltimore, Maryland 21202
(410) 662-7400

PLAN AND PROFILE - BMP 107 & 107C

FRANKLIN KNOLLS-PHASE 3
SLIGO (13th) ELECTION DISTRICT
PARCEL X, SUBDIVISION X, LIBER X FOLIO X
MONTGOMERY COUNTY, MARYLAND

CLIENT: MONTGOMERY COUNTY DEPT OF ENVIRONMENTAL PROTECTION
255 ROCKVILLE PIKE, RM. 120
ROCKVILLE, MD 20850-4166
MR. PAUL BOGLE, P.E.
(240) 777-7757

DESIGN	KCS
DRAFT	WJW
APPROVED	HJD
DATE	JUNE 2015
SCALE	1"=10'

SHEET 28 OF 43

FILE: I:\15\02\13 - Roadway LID – Forest Estates and the Four Corners Area\Design\Engineering\PlanSet\FK P3\phID-P023_FK3_BMP-107.dgn
PLOTTED: Tuesday, June 02, 2015 AT 10:35 AM

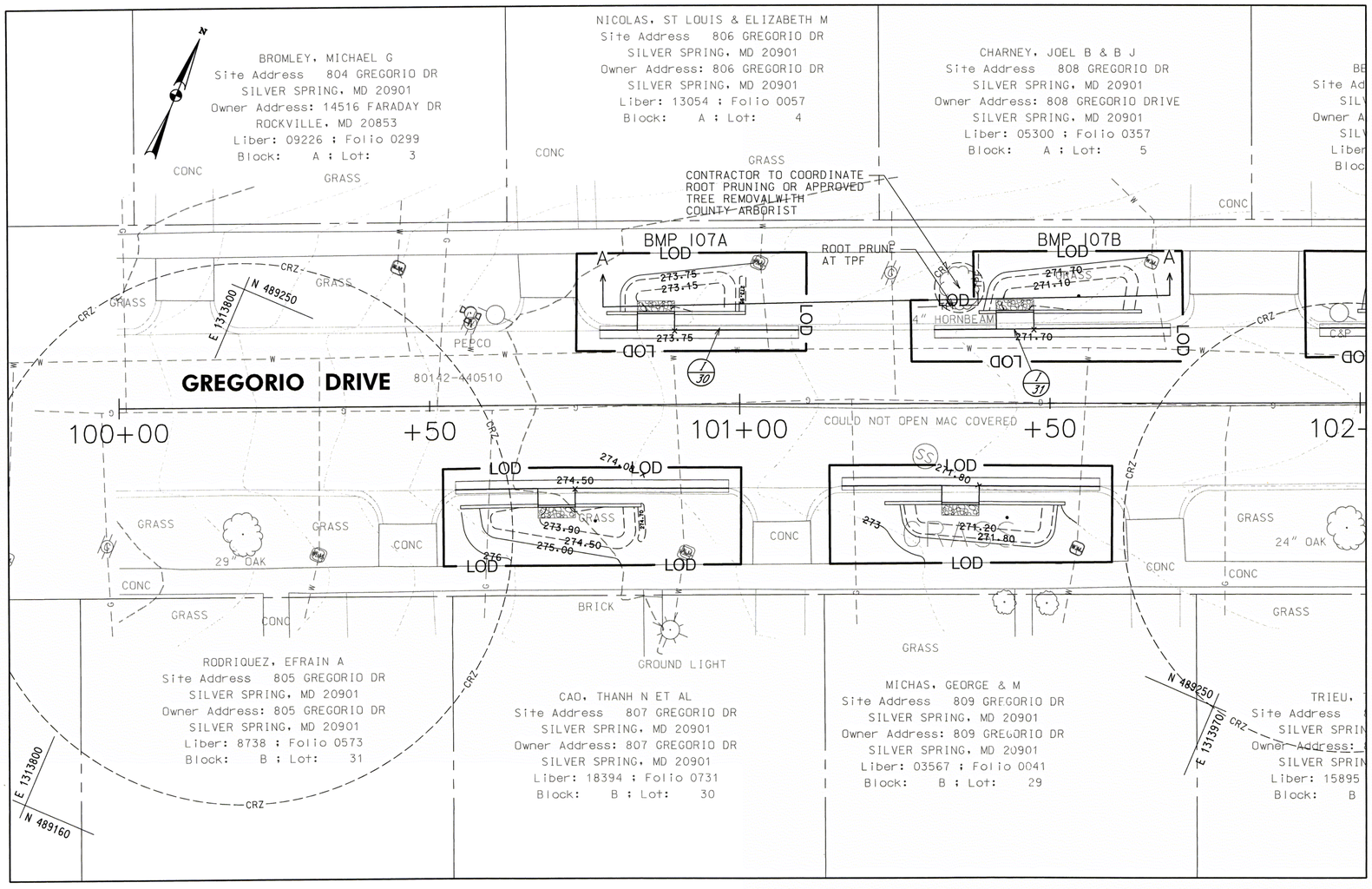

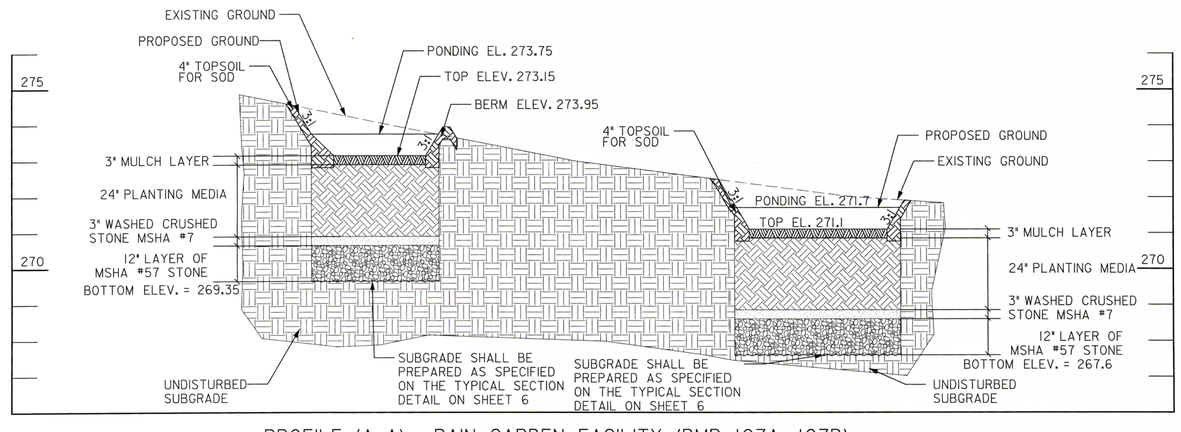

PROFILE (A-A) - RAIN GARDEN FACILITY (BMP 107A, 107B)

SCALE: HORIZ. 1"=10'
VERT. 1"=2'

AS-BUILT DATA FOR FILTERS (BIORETENTION/RAIN GARDENS)

*TO BE COMPLETED BY THE CERTIFYING ENGINEER

TYPE OF FACILITY: RAIN GARDEN — BMP ID: BMP 107A/ 107B

FEATURE	DESIGN	*AS-BUILT
DRAINAGE AREA (AC)	0.77	
TOTAL IMPERVIOUS AREA (AC)	0.34	
TREATMENT VOLUME PROVIDED (CF)	309	
TARGET WQv TREATMENT VOLUME (CF)	1,251	
FILTER BED AREA (SF) [1]	121	
FILTER BED SURFACE ELEVATION	273.75, 272.70	
DESIGN POINT/MAX. PONDING ELEVATION	273.15, 273.30	
PONDED WATER SURFACE ELEVATION AREA (SF) [2]	244	
OUTLET PIPE (UNDERDRAIN) SIZE / INVERT ELEV.		
THICKNESS OF FILTER MEDIA	REFER TO PROFILE	
PLACEMENT OF GEOTEXTILE (SIDES ONLY)	REFER TO FACILITY TYP. SECTION – SHEET 6	
PLANTINGS	REFER TO LANDSCAPE PLAN – SHEET 43	
COMPOSITION OF FILTER MEDIA	REFER TO MCDEP SPECIFICATIONS	

*NOTES:
1. "FILTER BED AREA (SF)" REPRESENTS THE EXPOSED SURFACE AREA AT THE PROPOSED "FILTER BED SURFACE ELEVATION".
2. FOR MATERIAL QUANTITY ESTIMATIONS, THE PLANTING MEDIA, STONE, MULCH, ETC. SHOULD BE BASED ON THE AREA OF "PONDED WATER SURFACE ELEVATION AREA (SF)".
3. CONTRACTOR SHALL TEST PIT UTILITIES PRIOR TO CONSTRUCTION. IF UTILITY IS UNAVOIDABLE, CONTRACTOR SHALL REFER TO SHEET 6 FOR UTILITY CROSSING DETAIL WITHIN THE FACILITY.

COMBINATION CONC. CURB AND GUTTER

STA. TO STA.	L.F.	REMARKS
100+77, LT TO 100+87, LT	10	TRANSITION TYPE C TO TYPE A
100+87, LT TO 100+94, LT	7	TYPE A, MC.101.01
101+00 LT TO 101+10, LT	10	TRANSITION TYPE A TO TYPE C
101+31, LT TO 101+41, LT	10	TRANSITION TYPE C TO TYPE A
101+47, LT TO 101+59, LT	12	TYPE A, MC.101.01
101+59, LT TO 101+69, LT	10	TRANSITION TYPE A TO TYPE C

DRAINAGE STRUCTURE SCHEDULE

NO	STATION / OFFSET	TC/TG	INV. OUT	REMARKS
OW-1072	100+90.7, 15.9' LT	-	-	OBSERVATION WELL
I-30	100+86.6, 11.9' LT	274.25	272.67	MODIFIED CURB INLET
OW-1073	101+54.7, 17.2' LT	-	-	OBSERVATION WELL
I-31	101+44.5, 11.9' LT	272.20	270.62	MODIFIED CURB INLET

CONCRETE EDGING

FROM		TO		QTY
STA	ELEV	STA	ELEV	LF
100+78.62	274.65	100+83.56	274.41	4.9
100+89.56	274.15	101+00.97	273.95	11.4
101+38.66	272.25	101+41.43	272.35	2.8
101+47.43	272.20	101+64.79	271.85	17.4

10' 0 10' 20'
SCALE: 1"=10'

McCORMICK TAYLOR
509 South Exeter Street
4th Floor
Baltimore, Maryland 21202
(410) 662-7400

PLAN AND PROFILE - BMP 107

FRANKLIN KNOLLS-PHASE 3

SLIGO (13th) ELECTION DISTRICT
PARCEL X, SUBDIVISION X, LIBER X FOLIO X
MONTGOMERY COUNTY, MARYLAND

CLIENT: MONTGOMERY COUNTY DEPT OF ENVIRONMENTAL PROTECTION
255 ROCKVILLE PIKE, RM. 120
ROCKVILLE, MD 20850-4166
MR. PAUL BOGLE, P.E.
(240) 777-7757

DESIGN	KCS
DRAFT	WJW
APPROVED	HJD
DATE	JUNE 2015
SCALE	1"=10'

SHEET 29 OF 43

FILE: I:\5182\13 - Roadway, LID – Forest Estates and the Four Corners Area\Design\Engineering\PlanSet\FK P3\pHD-P023_FK3_BMP-107A-B.dgn
PLOTTED: Tuesday, June 02, 2015 AT 10:35 AM

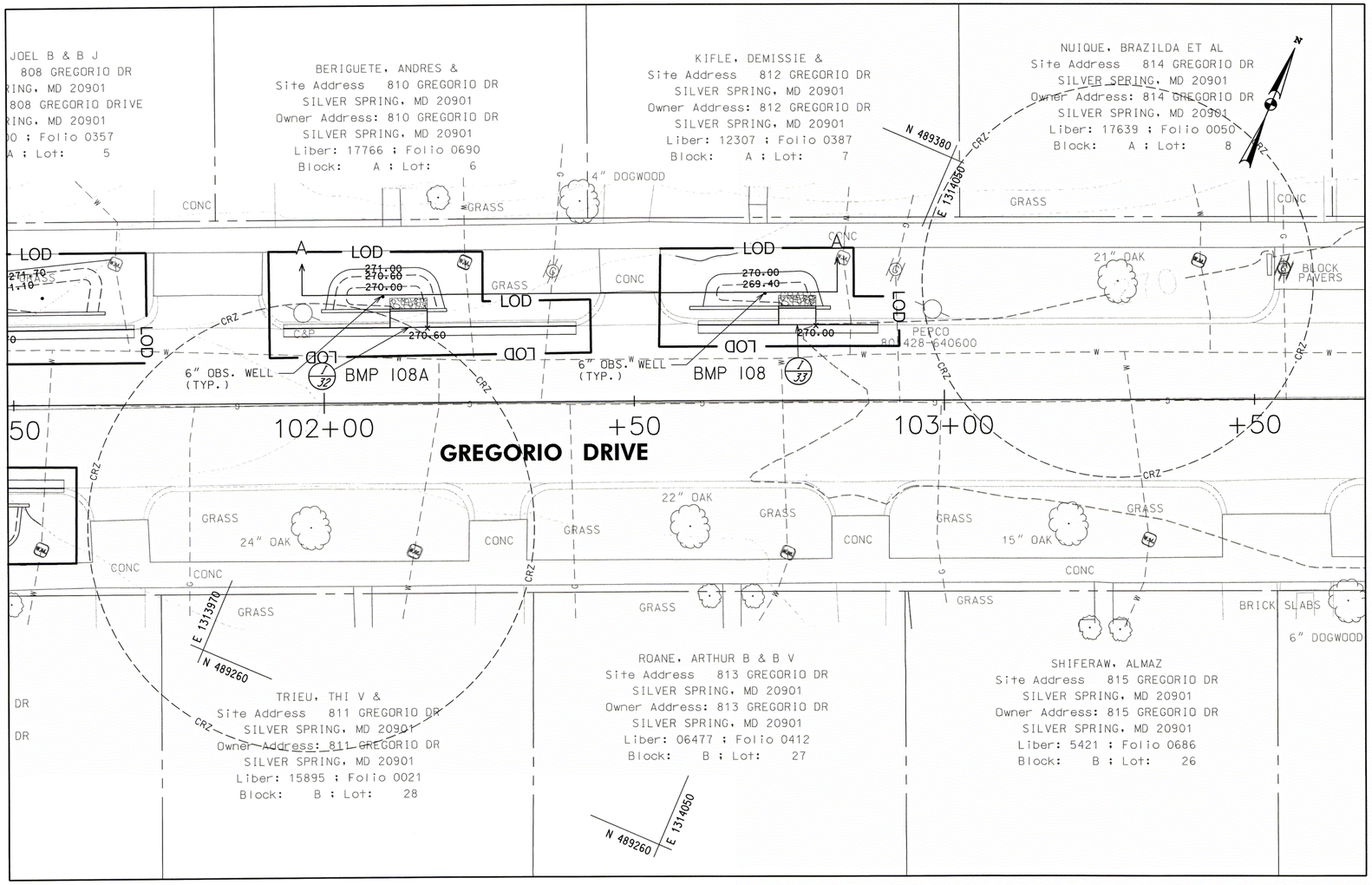

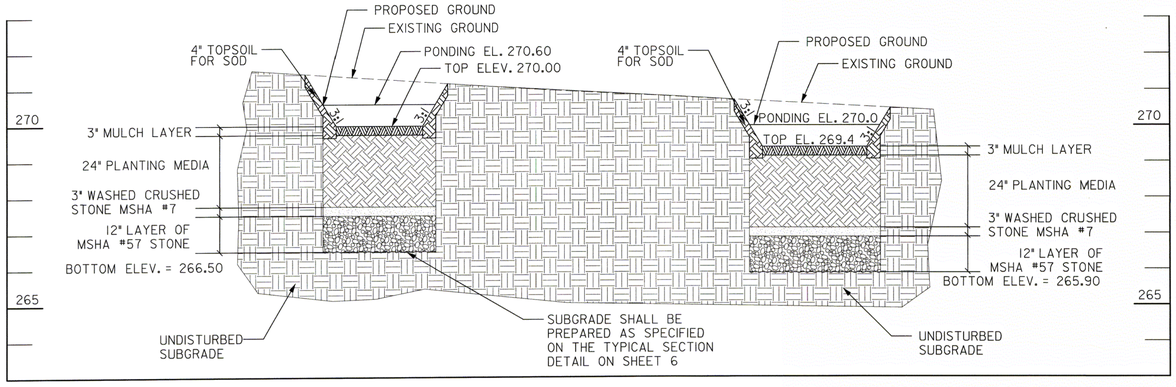

PROFILE (A-A) - RAIN GARDEN FACILITY (BMP 108-108A)

SCALE: HORIZ. 1"=10'
VERT. 1"=2'

AS-BUILT DATA FOR FILTERS (BIORETENTION/RAIN GARDENS)

*TO BE COMPLETED BY THE CERTIFYING ENGINEER

TYPE OF FACILITY: RAIN GARDEN — BMP ID: BMP 108 /108A

FEATURE	DESIGN	*AS-BUILT
DRAINAGE AREA (AC)	0.40	
TOTAL IMPERVIOUS AREA (AC)	0.15	
TREATMENT VOLUME PROVIDED (CF)	220	
TARGET WQv TREATMENT VOLUME (CF)	563	
FILTER BED AREA (SF) [1]	83	
FILTER BED SURFACE ELEVATION	269.40, 270.00	
DESIGN POINT/MAX. PONDING ELEVATION	270.00, 270.60	
PONDED WATER SURFACE ELEVATION AREA (SF) [2]	177	
OUTLET PIPE (UNDERDRAIN) SIZE / INVERT ELEV.		
THICKNESS OF FILTER MEDIA	REFER TO PROFILE	
PLACEMENT OF GEOTEXTILE (SIDES ONLY)	REFER TO FACILITY TYP. SECTION – SHEET 6	
PLANTINGS	REFER TO LANDSCAPE PLAN – SHEET 43	
COMPOSITION OF FILTER MEDIA	REFER TO MCDEP SPECIFICATIONS	

*NOTES:
1. "FILTER BED AREA (SF)" REPRESENTS THE EXPOSED SURFACE AREA AT THE PROPOSED "FILTER BED SURFACE ELEVATION".
2. FOR MATERIAL QUANTITY ESTIMATIONS, THE PLANTING MEDIA, STONE, MULCH, ETC. SHOULD BE BASED ON THE AREA OF "PONDED WATER SURFACE ELEVATION AREA (SF)".
3. CONTRACTOR SHALL TEST PIT UTILITIES PRIOR TO CONSTRUCTION. IF UTILITY IS UNAVOIDABLE, CONTRACTOR SHALL REFER TO SHEET 6 FOR UTILITY CROSSING DETAIL WITHIN THE FACILITY.

COMBINATION CONC. CURB AND GUTTER		
STA. TO STA.	L.F.	REMARKS
101+94, LT TO 102+04, LT	10	TRANSITION TYPE C TO TYPE A
102+04, LT TO 102+11, LT	7	TYPE A, MC.101.01
102+17, LT TO 102+31, LT	14	TYPE A, MC.101.01
102+31, LT TO 102+41, LT	10	TRANSITION TYPE A TO TYPE C
102+60, LT TO 102+70, LT	10	TRANSITION TYPE C TO TYPE A
102+70, LT TO 102+73, LT	3	TYPE A, MC.101.01
102+79, LT TO 102+89, LT	10	TRANSITION TYPE A TO TYPE C

DRAINAGE STRUCTURE SCHEDULE				
NO	STATION / OFFSET	TC/TG	INV. OUT	REMARKS
OW-1080	102+9.5, 17.0' RT	-	-	OBSERVATION WELL
I-32	102+13.7, 12.1' RT	271.10	269.52	MODIFIED CURB INLET
OW-1081	102+71.2, 17.2' LT	-	-	OBSERVATION WELL
I-32	102+76.3, 12.1' LT	270.50	268.92	MODIFIED CURB INLET

CONCRETE EDGING				
FROM		TO		QTY
STA	ELEV	STA	ELEV	LF
101+99.64	271.20	102+10.65	271.20	11.0
102+16.65	271.10	102+19.79	271.00	3.1
102+59.00	270.70	102+73.34	270.58	14.3
102+79.34	270.50	102+81.70	270.40	2.4

10' 0 10' 20'
SCALE: 1"=10'

McCORMICK TAYLOR
509 South Exeter Street
4th Floor
Baltimore, Maryland 21202
(410) 662-7400

PLAN AND PROFILE - BMP 108

FRANKLIN KNOLLS-PHASE 3

SLIGO (13th) ELECTION DISTRICT
PARCEL X, SUBDIVISION X, LIBER X FOLIO X
MONTGOMERY COUNTY, MARYLAND

CLIENT: MONTGOMERY COUNTY DEPT OF ENVIRONMENTAL PROTECTION
255 ROCKVILLE PIKE, RM. 120
ROCKVILLE, MD 20850-4166
MR. PAUL BOGLE, P.E.
(240) 777-7757

DESIGN	KCS	APPROVED	HJD	DATE	JUNE 2015	SCALE	1"=10'
DRAFT	WJW						

SHEET 30 OF 43

FILE: 1516213 - Roadway LD - Forest Estates and the Four Corners Area\Design\Engineering\PlanSet\FK F3\prt\D-R024_FK3_BMP-108.dgn
PLOTTED: Tuesday, June 02, 2015 AT 11:53 AM

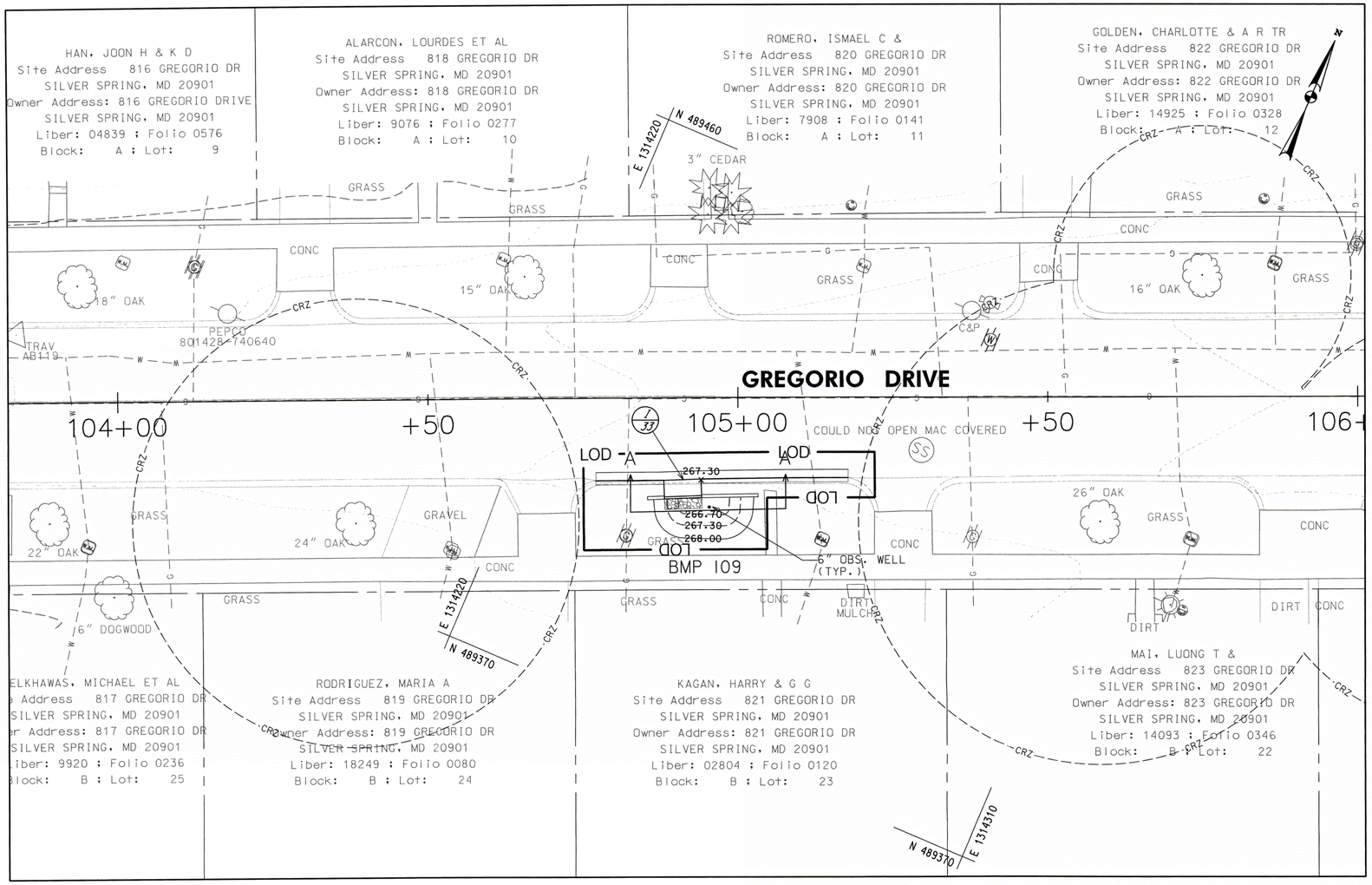

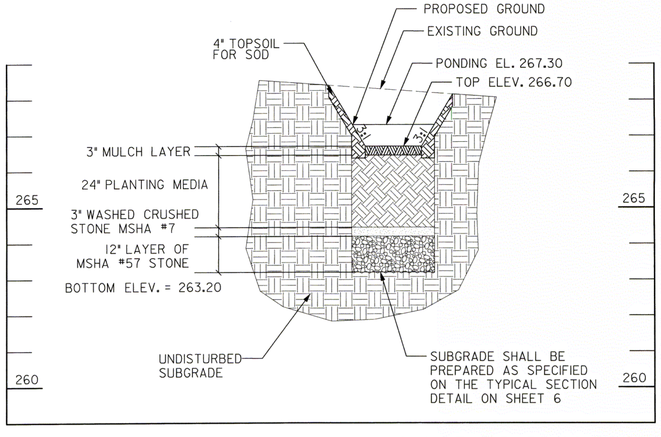

PROFILE (A-A) - RAIN GARDEN FACILITY (BMP 109)

SCALE: HORIZ. 1"=10'
VERT. 1"=2'

AS-BUILT DATA FOR FILTERS (BIORETENTION/RAIN GARDENS)

*TO BE COMPLETED BY THE CERTIFYING ENGINEER

TYPE OF FACILITY: RAIN GARDEN — BMP ID: BMP 109

FEATURE	DESIGN	*AS-BUILT
DRAINAGE AREA (AC)	0.43	
TOTAL IMPERVIOUS AREA (AC)	0.20	
TREATMENT VOLUME PROVIDED (CF)	60	
TARGET WQv TREATMENT VOLUME (CF)	731	
FILTER BED AREA (SF) [1]	21	
FILTER BED SURFACE ELEVATION	266.70	
DESIGN POINT/MAX. PONDING ELEVATION	267.30	
PONDED WATER SURFACE ELEVATION AREA (SF) [2]	49	
OUTLET PIPE (UNDERDRAIN) SIZE / INVERT ELEV.		
THICKNESS OF FILTER MEDIA	REFER TO PROFILE	
PLACEMENT OF GEOTEXTILE (SIDES ONLY)	REFER TO FACILITY TYP. SECTION – SHEET 6	
PLANTINGS	REFER TO LANDSCAPE PLAN – SHEET 43	
COMPOSITION OF FILTER MEDIA	REFER TO MCDEP SPECIFICATIONS	

*NOTES:
1. "FILTER BED AREA (SF)" REPRESENTS THE EXPOSED SURFACE AREA AT THE PROPOSED "FILTER BED SURFACE ELEVATION".
2. FOR MATERIAL QUANTITY ESTIMATIONS, THE PLANTING MEDIA, STONE, MULCH, ETC. SHOULD BE BASED ON THE AREA OF "PONDED WATER SURFACE ELEVATION AREA (SF)".
3. CONTRACTOR SHALL TEST PIT UTILITIES PRIOR TO CONSTRUCTION. IF UTILITY IS UNAVOIDABLE, CONTRACTOR SHALL REFER TO SHEET 6 FOR UTILITY CROSSING DETAIL WITHIN THE FACILITY.

COMBINATION CONC. CURB AND GUTTER

STA. TO STA.	L.F.	REMARKS
104+77, RT TO 104+87, RT	10	TRANSITION TYPE C TO TYPE A
104+87, RT TO 104+88, RT	1	TYPE A, MC.101.01
104+94, RT TO 105+08, RT	14	TYPE A, MC.101.01
105+08, RT TO 105+18, RT	10	TRANSITION TYPE A TO TYPE C

DRAINAGE STRUCTURE SCHEDULE

NO	STATION / OFFSET	TC/TG	INV. OUT	REMARKS
OW-1090	104+95.3, 17.5' RT	-	-	OBSERVATION WELL
I-33	104+91.0, 13.1' RT	267.80	266.22	MODIFIED CURB INLET

CONCRETE EDGING

FROM		TO		QTY
STA	ELEV	STA	ELEV	LF
104+85.37	268.10	104+88.11	267.34	2.7
104+94.10	267.30	105+03.19	268.05	9.1

10' 0 10' 20'
SCALE: 1"=10'

McCORMICK TAYLOR
509 South Exeter Street
4th Floor
Baltimore, Maryland 21202
(410) 662-7400

PLAN AND PROFILE - BMP 109

FRANKLIN KNOLLS-PHASE 3

SLIGO (13th) ELECTION DISTRICT
PARCEL X, SUBDIVISION X, LIBER X FOLIO X
MONTGOMERY COUNTY, MARYLAND

CLIENT: MONTGOMERY COUNTY DEPT OF ENVIRONMENTAL PROTECTION
255 ROCKVILLE PIKE, RM. 120
ROCKVILLE, MD 20850-4166
MR. PAUL BOGLE, P.E.
(240) 777-7757

DESIGN	KCS
DRAFT	WJW
APPROVED	HJD
DATE	JUNE 2015
SCALE	1"=10'

SHEET 31 OF 43

FILE: I:\51621\3 - Roadway LID – Forest Estates and the Four Corners Area\Design\Engineering\PlanSet\FK P3\pHD-P025_FK3_BMP-109.dgn
PLOTTED: Tuesday, June 02, 2015 AT 10:35 AM

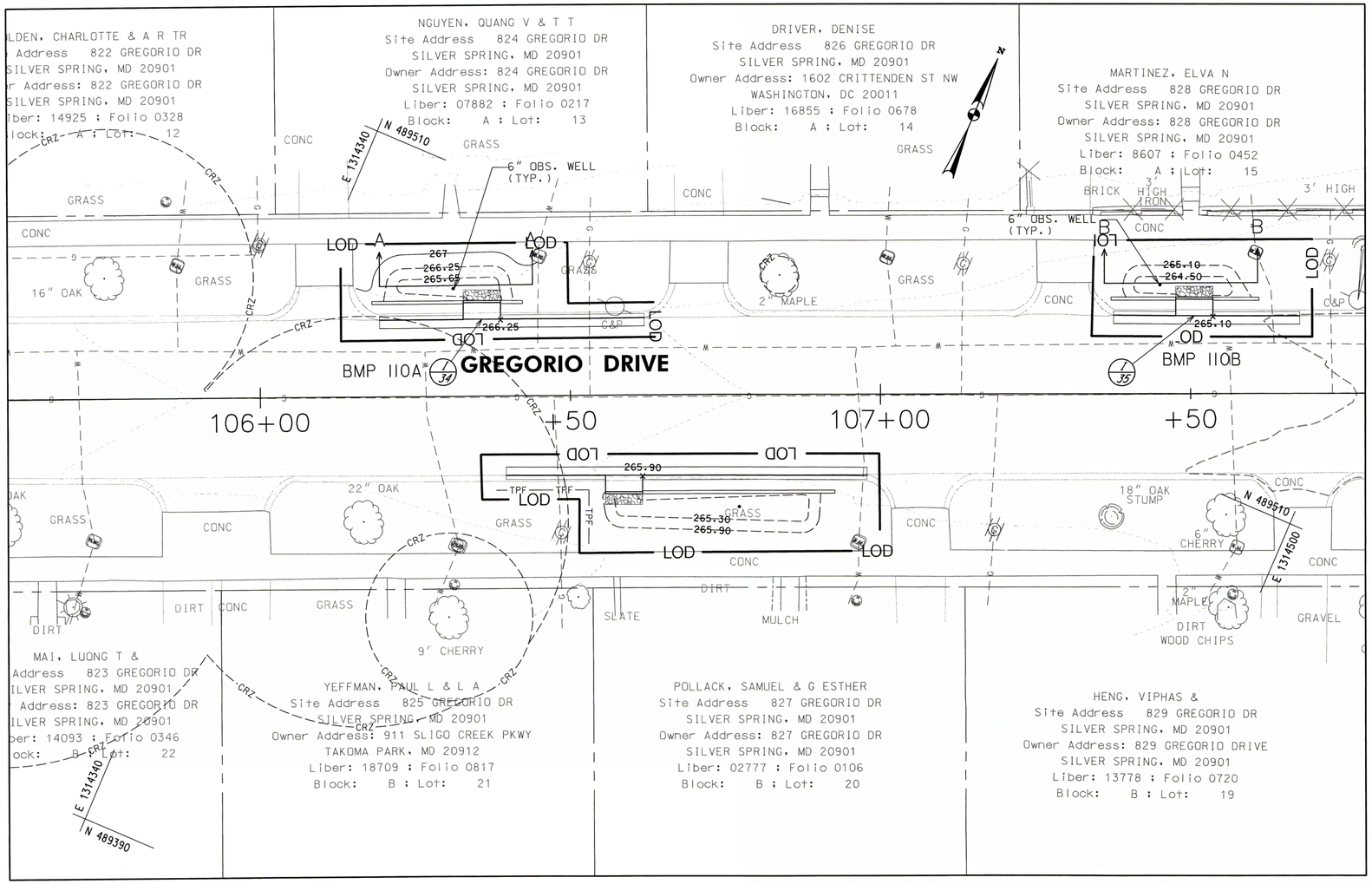

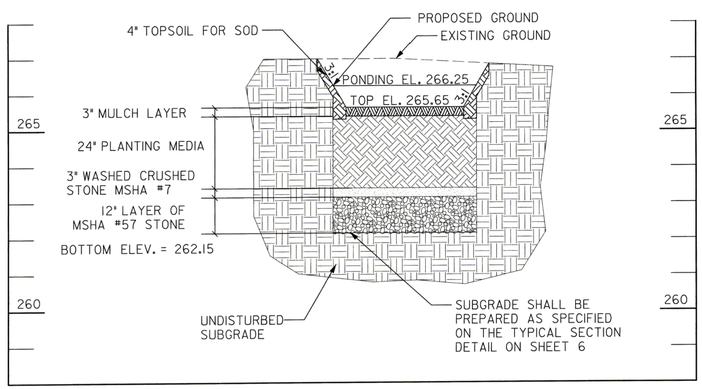

PROFILE (A-A) - RAIN GARDEN FACILITY (BMP 110A)

SCALE: HORIZ. 1"=10'
VERT. 1"=2'

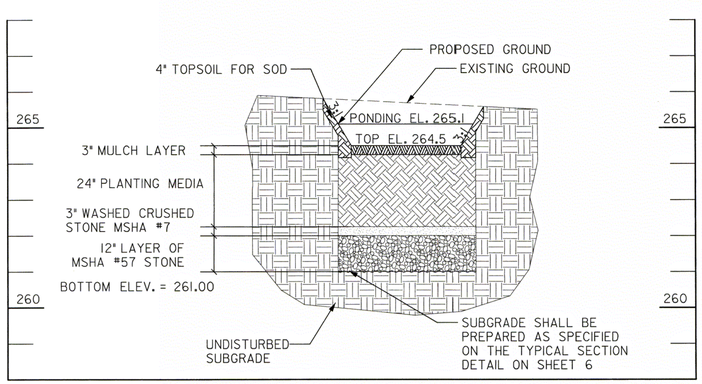

PROFILE (B-B) - RAIN GARDEN FACILITY (BMP 110B)

SCALE: HORIZ. 1"=10'
VERT. 1"=2'

AS-BUILT DATA FOR FILTERS (BIORETENTION/RAIN GARDENS)

*TO BE COMPLETED BY THE CERTIFYING ENGINEER

TYPE OF FACILITY: RAIN GARDEN — BMP ID: BMP 110 A /110B

FEATURE	DESIGN	*AS-BUILT
DRAINAGE AREA (AC)	1.50	
TOTAL IMPERVIOUS AREA (AC)	0.58	
TREATMENT VOLUME PROVIDED (CF)	249	
TARGET WQv TREATMENT VOLUME (CF)	2,167	
FILTER BED AREA (SF) [1]	94	
FILTER BED SURFACE ELEVATION	265.65, 264.50	
DESIGN POINT/MAX. PONDING ELEVATION	266.25, 265.10	
PONDED WATER SURFACE ELEVATION AREA (SF) [2]	201	
OUTLET PIPE (UNDERDRAIN) SIZE / INVERT ELEV.		
THICKNESS OF FILTER MEDIA	REFER TO PROFILE	
PLACEMENT OF GEOTEXTILE (SIDES ONLY)	REFER TO FACILITY TYP. SECTION – SHEET 6	
PLANTINGS	REFER TO LANDSCAPE PLAN – SHEET 43	
COMPOSITION OF FILTER MEDIA	REFER TO MCDEP SPECIFICATIONS	

*NOTES:

1. "FILTER BED AREA (SF)" REPRESENTS THE EXPOSED SURFACE AREA AT THE PROPOSED "FILTER BED SURFACE ELEVATION".
2. FOR MATERIAL QUANTITY ESTIMATIONS, THE PLANTING MEDIA, STONE, MULCH, ETC. SHOULD BE BASED ON THE AREA OF "PONDED WATER SURFACE ELEVATION AREA (SF)".
3. CONTRACTOR SHALL TEST PIT UTILITIES PRIOR TO CONSTRUCTION. IF UTILITY IS UNAVOIDABLE, CONTRACTOR SHALL REFER TO SHEET 6 FOR UTILITY CROSSING DETAIL WITHIN THE FACILITY.

COMBINATION CONC. CURB AND GUTTER

STA. TO STA.	L.F.	REMARKS
106+19, LT TO 106+29, LT	10	TRANSITION TYPE C TO TYPE A
106+29, LT TO 106+33, LT	4	TYPE A, MC.101.01
106+39, LT TO 106+52, LT	13	TYPE A, MC.101.01
106+52, LT TO 106+62, LT	10	TRANSITION TYPE A TO TYPE C
107+38, LT TO 107+48, LT	10	TRANSITION TYPE C TO TYPE A
107+54, LT TO 107+58, LT	4	TYPE A, MC.101.01
107+58, LT TO 107+68, LT	10	TRANSITION TYPE A TO TYPE C

DRAINAGE STRUCTURE SCHEDULE

NO	STATION / OFFSET	TC/TG	INV. OUT	REMARKS
OW-1100	106+31.2, 17.3' LT	-	-	OBSERVATION WELL
I-34	106+35.8, 12.4' LT	266.75	265.17	MODIFIED CURB INLET
OW-1101	107+45.1, 17.5' LT	-	-	OBSERVATION WELL
I-35	107+50.6, 12.5' LT	265.60	264.02	MODIFIED CURB INLET

CONCRETE EDGING

FROM		TO		QTY
STA	ELEV	STA	ELEV	LF
106+18.04	266.90	106+32.81	266.88	14.8
106+38.81	266.75	106+42.34	266.62	3.5
107+37.23	265.55	107+47.64	265.66	10.4
107+53.64	265.60	107+61.08	265.35	7.4

10' 0 10' 20'
SCALE: 1"=10'

McCORMICK TAYLOR
509 South Exeter Street
4th Floor
Baltimore, Maryland 21202
(410) 662-7400

PLAN AND PROFILE - BMP 110

FRANKLIN KNOLLS-PHASE 3

SLIGO (13th) ELECTION DISTRICT
PARCEL X, SUBDIVISION X, LIBER X FOLIO X
MONTGOMERY COUNTY, MARYLAND

CLIENT: MONTGOMERY COUNTY DEPT OF ENVIRONMENTAL PROTECTION
255 ROCKVILLE PIKE, RM. 120
ROCKVILLE, MD 20850-4166
MR. PAUL BOGLE, P.E.
(240) 777-7757

DESIGN	KCS
DRAFT	WJW
APPROVED	HJD
DATE	JUNE 2015
SCALE	1"=10'

SHEET 32 OF 43

FILE: I:\5182\13 - Roadway LID - Forest Estates and the Four Corners Area\Design\Engineering\PlanSet\FX P3\pH3-P026_PK3_BMP-110.dgn
PLOTTED: Tuesday, June 02, 2015 AT 10:35 AM

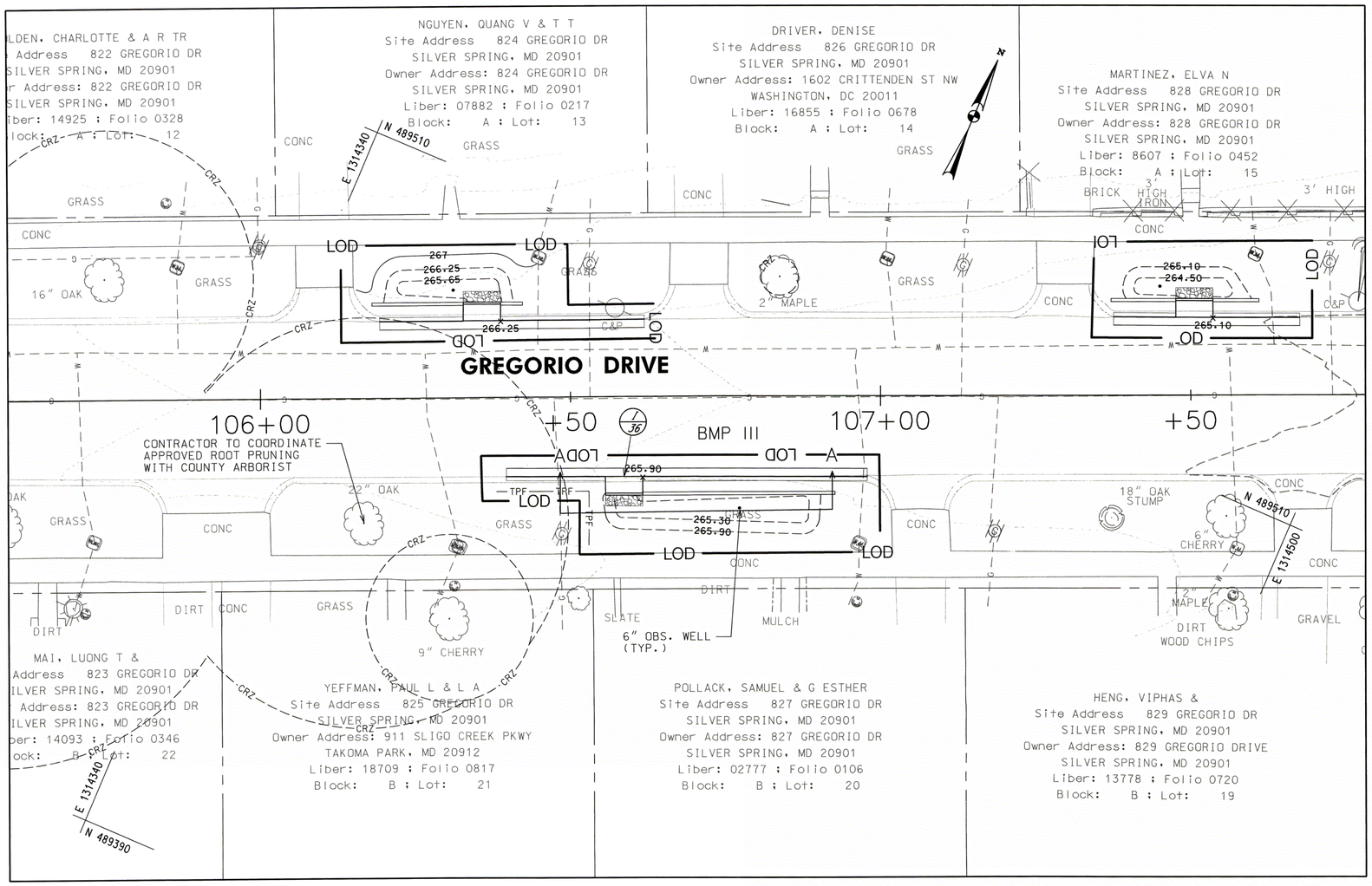

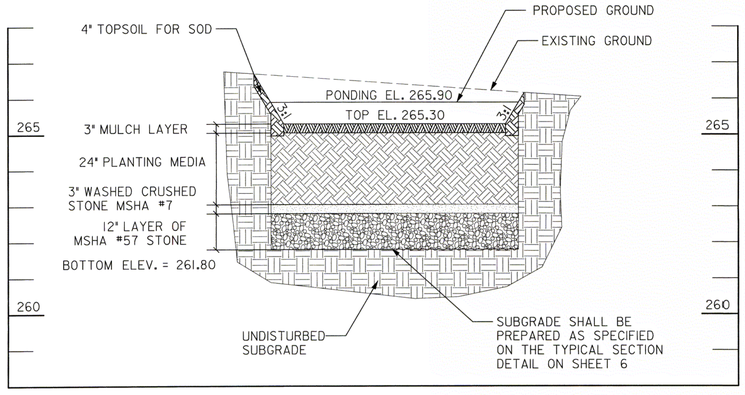

PROFILE (A-A) - RAIN GARDEN FACILITY (BMP III)

SCALE: HORIZ. 1"=10'
VERT. 1"=2'

AS-BUILT DATA FOR FILTERS (BIORETENTION/RAIN GARDENS)

*TO BE COMPLETED BY THE CERTIFYING ENGINEER

TYPE OF FACILITY: RAIN GARDEN — BMP ID: BMP 111

FEATURE	DESIGN	*AS-BUILT
DRAINAGE AREA (AC)	0.12	
TOTAL IMPERVIOUS AREA (AC)	0.07	
TREATMENT VOLUME PROVIDED (CF)	253	
TARGET WQv TREATMENT VOLUME (CF)	250	
FILTER BED AREA (SF) [1]	109	
FILTER BED SURFACE ELEVATION	265.30	
DESIGN POINT/MAX. PONDING ELEVATION	265.90	
PONDED WATER SURFACE ELEVATION AREA (SF) [2]	200	
OUTLET PIPE (UNDERDRAIN) SIZE / INVERT ELEV.		
THICKNESS OF FILTER MEDIA	REFER TO PROFILE	
PLACEMENT OF GEOTEXTILE (SIDES ONLY)	REFER TO FACILITY TYP. SECTION – SHEET 6	
PLANTINGS	REFER TO LANDSCAPE PLAN – SHEET 43	
COMPOSITION OF FILTER MEDIA	REFER TO MCDEP SPECIFICATIONS	

*NOTES:

1. "FILTER BED AREA (SF)" REPRESENTS THE EXPOSED SURFACE AREA AT THE PROPOSED "FILTER BED SURFACE ELEVATION".
2. FOR MATERIAL QUANTITY ESTIMATIONS, THE PLANTING MEDIA, STONE, MULCH, ETC. SHOULD BE BASED ON THE AREA OF "PONDED WATER SURFACE ELEVATION AREA (SF)".
3. CONTRACTOR SHALL TEST PIT UTILITIES PRIOR TO CONSTRUCTION. IF UTILITY IS UNAVOIDABLE, CONTRACTOR SHALL REFER TO SHEET 6 FOR UTILITY CROSSING DETAIL WITHIN THE FACILITY.

COMBINATION CONC. CURB AND GUTTER

STA. TO STA.	L.F.	REMARKS
106+40, RT TO 106+50, RT	10	TRANSITION TYPE C TO TYPE A
106+50, RT TO 106+56, RT	6	TYPE A, MC.101.01
106+62, RT TO 106+88, RT	26	TYPE A, MC.101.01
106+88, RT TO 106+98, RT	10	TRANSITION TYPE A TO TYPE C

DRAINAGE STRUCTURE SCHEDULE

NO	STATION / OFFSET	TC/TG	INV. OUT	REMARKS
OW-1110	106+77.2, 17.9' RT	-	-	OBSERVATION WELL
I-36	106+58.6, 12.8' RT	266.40	264.82	MODIFIED CURB INLET

CONCRETE EDGING

FROM		TO		QTY
STA	ELEV	STA	ELEV	LF
106+61.58	266.40	106+92.57	266.05	31.0

10' 0 10' 20'
SCALE: 1"=10'

McCORMICK TAYLOR
509 South Exeter Street
4th Floor
Baltimore, Maryland 21202
(410) 662-7400

PLAN AND PROFILE - BMP 111

FRANKLIN KNOLLS-PHASE 3

SLIGO (13th) ELECTION DISTRICT
PARCEL X, SUBDIVISION X, LIBER X FOLIO X
MONTGOMERY COUNTY, MARYLAND

CLIENT: MONTGOMERY COUNTY DEPT OF ENVIRONMENTAL PROTECTION
255 ROCKVILLE PIKE, RM. 120
ROCKVILLE, MD 20850-4166
MR. PAUL BOGLE, P.E.
(240) 777-7757

DESIGN	KCS
DRAFT	WJW
APPROVED	H.D
DATE	JUNE 2015
SCALE	1"=10'

SHEET 33 OF 43

FILE: I:\516213 - Roadway LID - Forest Estates and the Four Corners Area\Design\Engineering\PlanSet\FK P3\pltID-P02d_FK3_BMP-111.dgn
PLOTTED: Tuesday, June 02, 2015 AT 10:33 AM

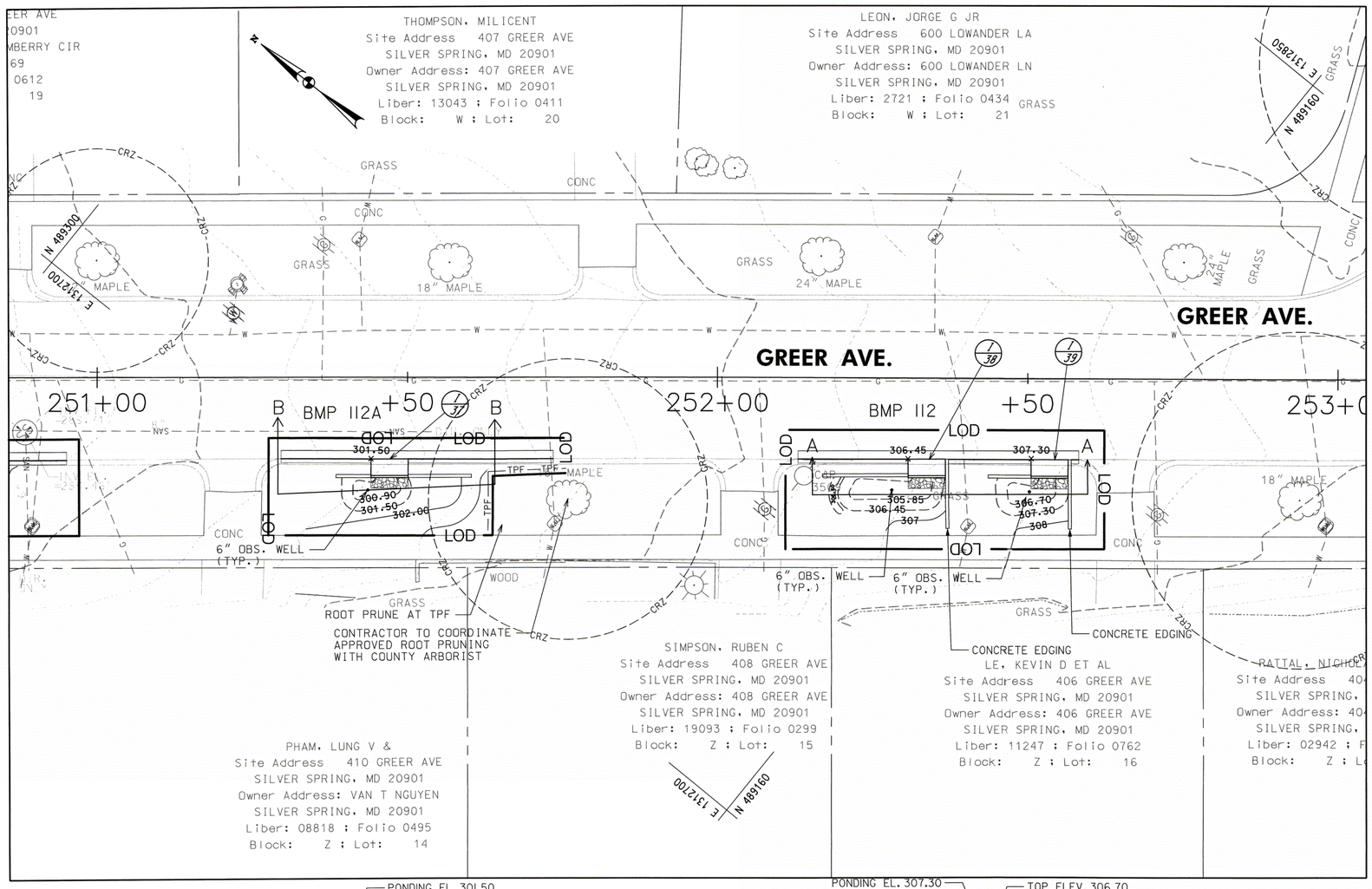

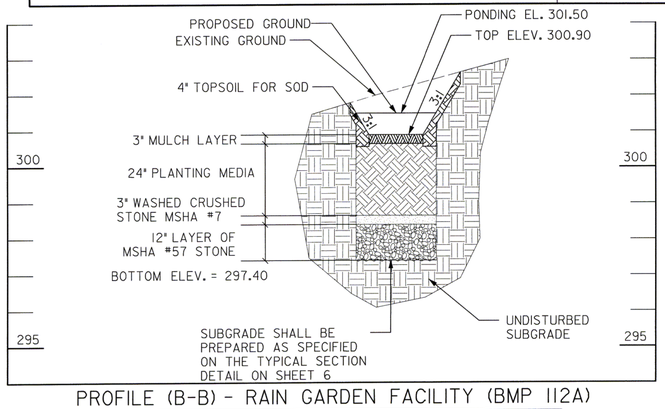

PROFILE (B-B) - RAIN GARDEN FACILITY (BMP 112A)

SCALE: HORIZ. 1"=10'
VERT. 1"=2'

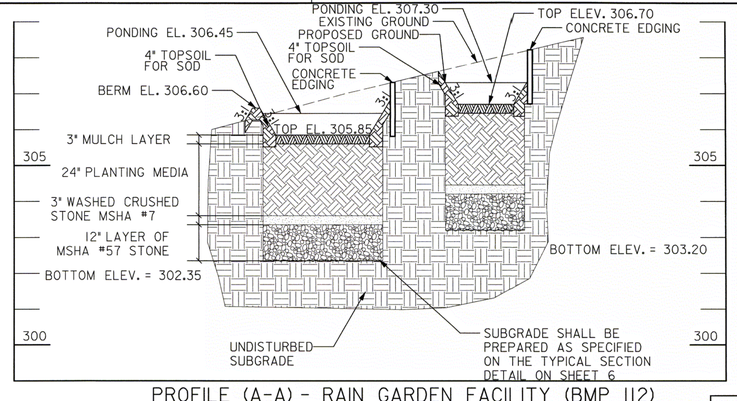

PROFILE (A-A) - RAIN GARDEN FACILITY (BMP 112)

SCALE: HORIZ. 1"=10'
VERT. 1"=2'

AS-BUILT DATA FOR FILTERS (BIORETENTION/RAIN GARDENS)

*TO BE COMPLETED BY THE CERTIFYING ENGINEER

TYPE OF FACILITY: RAIN GARDEN — BMP ID: BMP 112

FEATURE	DESIGN	*AS-BUILT
DRAINAGE AREA (AC)	1.03	
TOTAL IMPERVIOUS AREA (AC)	0.28	
TREATMENT VOLUME PROVIDED (CF)	180	
TARGET WQv TREATMENT VOLUME (CF)	1,102	
FILTER BED AREA (SF) [1]	65	
FILTER BED SURFACE ELEVATION	305.85, 306.70	
DESIGN POINT/MAX. PONDING ELEVATION	306.45, 307.30	
PONDED WATER SURFACE ELEVATION AREA (SF) [2]	146	
OUTLET PIPE (UNDERDRAIN) SIZE / INVERT ELEV.		
THICKNESS OF FILTER MEDIA	REFER TO PROFILE	
PLACEMENT OF GEOTEXTILE (SIDES ONLY)	REFER TO FACILITY TYP. SECTION – SHEET 6	
PLANTINGS	REFER TO LANDSCAPE PLAN – SHEET 43	
COMPOSITION OF FILTER MEDIA	REFER TO MCDEP SPECIFICATIONS	

*NOTES:
1. "FILTER BED AREA (SF)" REPRESENTS THE EXPOSED SURFACE AREA AT THE PROPOSED "FILTER BED SURFACE ELEVATION".
2. FOR MATERIAL QUANTITY ESTIMATIONS, THE PLANTING MEDIA, STONE, MULCH, ETC. SHOULD BE BASED ON THE AREA OF "PONDED WATER SURFACE ELEVATION AREA (SF)".
3. CONTRACTOR SHALL TEST PIT UTILITIES PRIOR TO CONSTRUCTION. IF UTILITY IS UNAVOIDABLE, CONTRACTOR SHALL REFER TO SHEET 6 FOR UTILITY CROSSING DETAIL WITHIN THE FACILITY.

AS-BUILT DATA FOR FILTERS (BIORETENTION/RAIN GARDENS)

*TO BE COMPLETED BY THE CERTIFYING ENGINEER

TYPE OF FACILITY: RAIN GARDEN — BMP ID: BMP 112A

FEATURE	DESIGN	*AS-BUILT
DRAINAGE AREA (AC)	0.42	
TOTAL IMPERVIOUS AREA (AC)	0.16	
TREATMENT VOLUME PROVIDED (CF)	64	
TARGET WQv TREATMENT VOLUME (CF)	599	
FILTER BED AREA (SF) [1]	21	
FILTER BED SURFACE ELEVATION	300.90	
DESIGN POINT/MAX. PONDING ELEVATION	301.50	
PONDED WATER SURFACE ELEVATION AREA (SF) [2]	52	
OUTLET PIPE (UNDERDRAIN) SIZE / INVERT ELEV.		
THICKNESS OF FILTER MEDIA	REFER TO PROFILE	
PLACEMENT OF GEOTEXTILE (SIDES ONLY)	REFER TO FACILITY TYP. SECTION – SHEET 6	
PLANTINGS	REFER TO LANDSCAPE PLAN – SHEET 43	
COMPOSITION OF FILTER MEDIA	REFER TO MCDEP SPECIFICATIONS	

DRAINAGE STRUCTURE SCHEDULE

NO	STATION / OFFSET	TC/TG	INV. OUT	REMARKS
OW-1120	251+43.6, 18.1' RT	-	-	OBSERVATION WELL
I-37	251+47.1, 13.1' RT	302.00	300.42	MODIFIED CURB INLET
OW-1121	252+28.1, 18.0' RT	-	-	OBSERVATION WELL
I-38	252+33.8, 13.0' RT	306.95	305.37	MODIFIED CURB INLET
OW-1122	252+50.3, 18.2' RT	-	-	OBSERVATION WELL
I-39	252+53.6, 13.0' RT	307.80	306.22	MODIFIED CURB INLET

CONCRETE EDGING

FROM STA	FROM ELEV	TO STA	TO ELEV	QTY LF
251+38.49	301.65	251+44.13	302.00	5.6
251+50.13	302.34	251+60.33	302.75	10.2
252+16.94	306.05	252+30.78	306.95	13.8
252+36.75	307.15	252+36.87	307.50	11.1
252+43.71	307.45	252+50.56	307.80	6.9
252+56.55	308.05	252+56.58	308.40	11.1

COMBINATION CONC. CURB AND GUTTER

STA. TO STA.	L.F.	REMARKS
251+30, RT TO 259+40, RT	10	TRANSITION TYPE C TO TYPE A
251+40, RT TO 251+44, RT	5	TYPE A, MC.101.01
251+50, RT TO 251+64, RT	13	TYPE A, MC.101.01
251+64, RT TO 251+74, RT	10	TRANSITION TYPE A TO TYPE C
252+13, RT TO 252+23, RT	10	TRANSITION TYPE C TO TYPE A
252+23, RT TO 252+31, RT	13	TYPE A, MC.101.01
252+37, RT TO 252+51, RT	14	TYPE A, MC.101.01
252+57, RT TO 252+58, RT	1	TRANSITION TYPE A TO TYPE C

10' 0 10' 20'
SCALE: 1"=10'

McCORMICK TAYLOR
509 South Exeter Street
4th Floor
Baltimore, Maryland 21202
(410) 662-7400

PLAN AND PROFILE - BMP 112

FRANKLIN KNOLLS-PHASE 3

SLIGO (13th) ELECTION DISTRICT
PARCEL X, SUBDIVISION X, LIBER X FOLIO X
MONTGOMERY COUNTY, MARYLAND

CLIENT: MONTGOMERY COUNTY DEPT OF ENVIRONMENTAL PROTECTION
255 ROCKVILLE PIKE, RM. 120
ROCKVILLE, MD 20850-4166
MR. PAUL BOGLE, P.E.
(240) 777-7757

DESIGN	KCS
DRAFT	WJW
APPROVED	HJD
DATE	JUNE 2015
SCALE	1"=10'

SHEET 34 OF 43

FILE: I:\5150\13-Roadway\3D - Forest Edges and the Four Corners Area\Design\Engineering\Plan Set\FK P3\phase\D-P027_FK3_BMP-112.dgn
PLOTTED: Tuesday, June 02, 2015 AT 10:35 AM

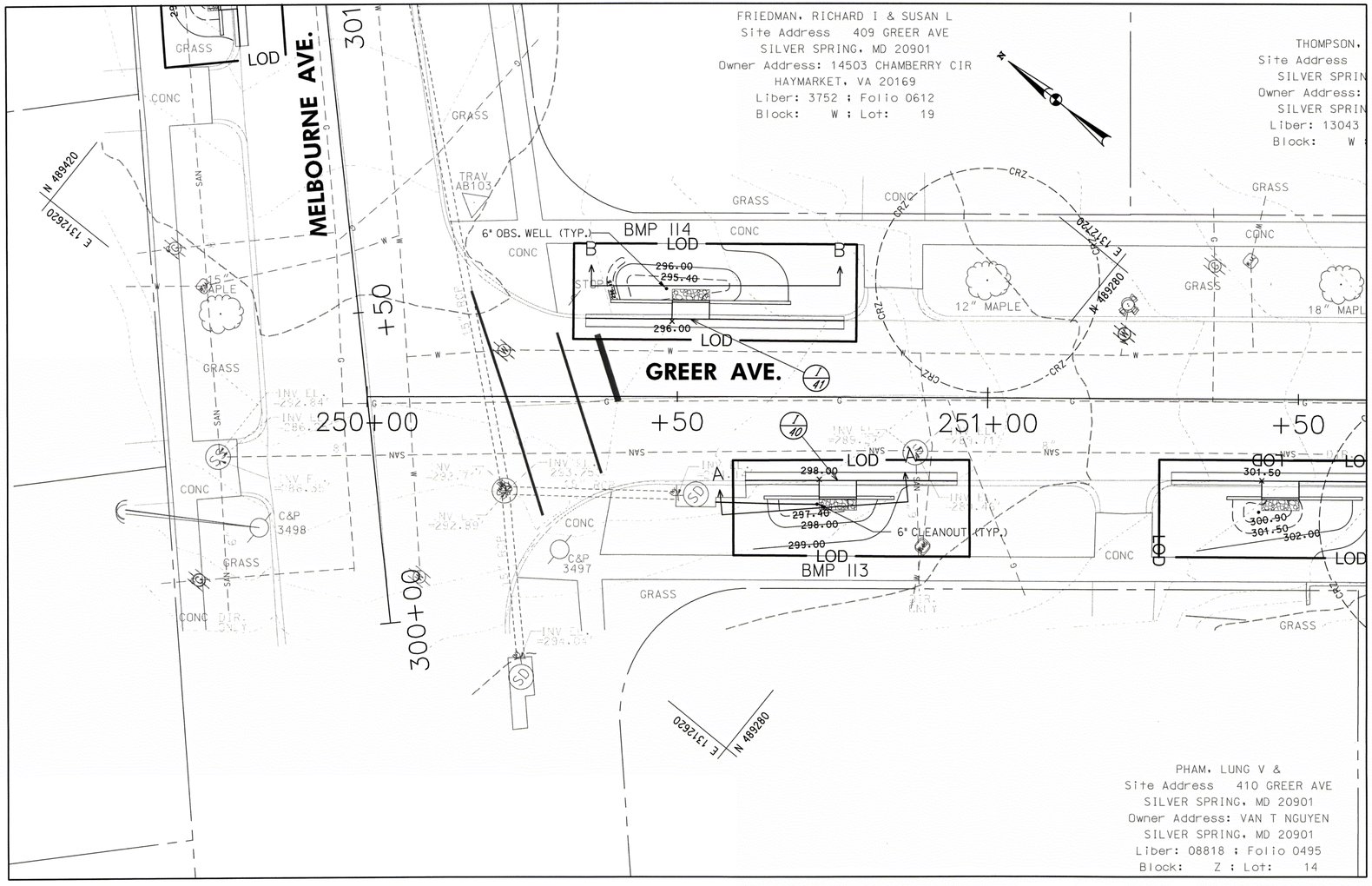

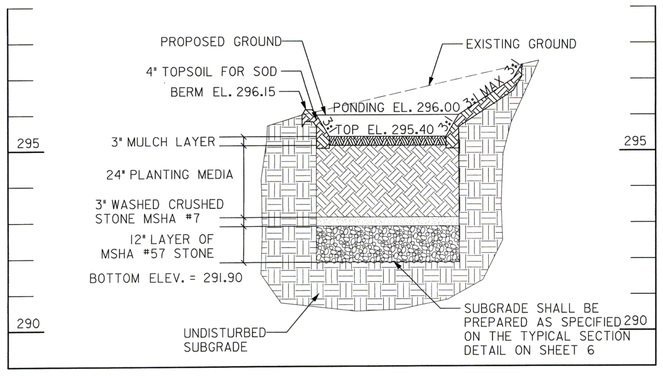

PROFILE (B-B) - RAIN GARDEN FACILITY (BMP 114)

SCALE: HORIZ. 1"=10'
VERT. 1"=2'

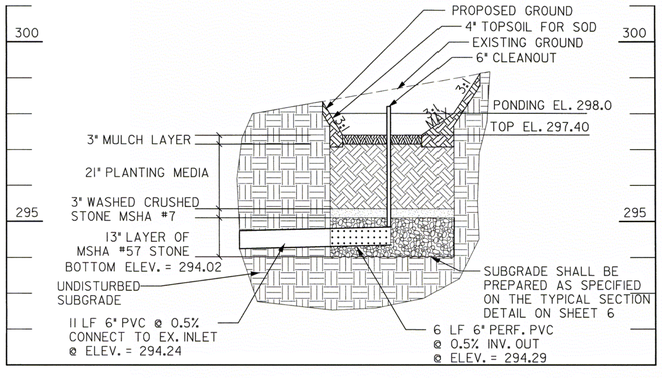

PROFILE (A-A) - BIORETENTION FACILITY (BMP 113)

SCALE: HORIZ. 1"=10'
VERT. 1"=2'

AS-BUILT DATA FOR FILTERS (BIORETENTION/RAIN GARDENS) *TO BE COMPLETED BY THE CERTIFYING ENGINEER		
TYPE OF FACILITY: BIORETENTION	BMP ID: BMP 113	
FEATURE	DESIGN	*AS-BUILT
DRAINAGE AREA (AC)	0.68	
TOTAL IMPERVIOUS AREA (AC)	0.20	
TREATMENT VOLUME PROVIDED (CF)	74	
TARGET WQv TREATMENT VOLUME (CF)	777	
FILTER BED AREA (SF) [1]	26	
FILTER BED SURFACE ELEVATION	297.40	
DESIGN POINT/MAX. PONDING ELEVATION	298.00	
PONDED WATER SURFACE ELEVATION AREA (SF) [2]	66	
OUTLET PIPE (UNDERDRAIN) SIZE / INVERT ELEV.	6" / 294.24	
THICKNESS OF FILTER MEDIA	REFER TO PROFILE	
PLACEMENT OF GEOTEXTILE (SIDES ONLY)	REFER TO FACILITY TYP. SECTION – SHEET 6	
PLANTINGS	REFER TO LANDSCAPE PLAN – SHEET 43	
COMPOSITION OF FILTER MEDIA	REFER TO MCDEP SPECIFICATIONS	

*NOTES:
1. "FILTER BED AREA (SF)" REPRESENTS THE EXPOSED SURFACE AREA AT THE PROPOSED "FILTER BED SURFACE ELEVATION".
2. FOR MATERIAL QUANTITY ESTIMATIONS, THE PLANTING MEDIA, STONE, MULCH, ETC. SHOULD BE BASED ON THE AREA OF "PONDED WATER SURFACE ELEVATION AREA (SF)".
3. CONTRACTOR SHALL TEST PIT UTILITIES PRIOR TO CONSTRUCTION. IF UTILITY IS UNAVOIDABLE, CONTRACTOR SHALL REFER TO SHEET 6 FOR UTILITY CROSSING DETAIL WITHIN THE FACILITY.

AS-BUILT DATA FOR FILTERS (BIORETENTION/RAIN GARDENS) *TO BE COMPLETED BY THE CERTIFYING ENGINEER		
TYPE OF FACILITY: RAIN GARDEN	BMP ID: BMP 114	
FEATURE	DESIGN	*AS-BUILT
DRAINAGE AREA (AC)	0.33	
TOTAL IMPERVIOUS AREA (AC)	0.14	
TREATMENT VOLUME PROVIDED (CF)	130	
TARGET WQv TREATMENT VOLUME (CF)	517	
FILTER BED AREA (SF) [1]	52	
FILTER BED SURFACE ELEVATION	295.40	
DESIGN POINT/MAX. PONDING ELEVATION	296.00	
PONDED WATER SURFACE ELEVATION AREA (SF) [2]	104	
OUTLET PIPE (UNDERDRAIN) SIZE / INVERT ELEV.		
THICKNESS OF FILTER MEDIA	REFER TO PROFILE	
PLACEMENT OF GEOTEXTILE (SIDES ONLY)	REFER TO FACILITY TYP. SECTION – SHEET 6	
PLANTINGS	REFER TO LANDSCAPE PLAN – SHEET 43	
COMPOSITION OF FILTER MEDIA	REFER TO MCDEP SPECIFICATIONS	

COMBINATION CONC. CURB AND GUTTER		
STA. TO STA.	L.F.	REMARKS
250+35, LT TO 250+45, LT	10	TRANSITION TYPE C TO TYPE A
250+45, LT TO 250+49, LT	4	TYPE A, MC.101.01
250+55, LT TO 250+66, LT	12	TYPE A, MC.101.01
250+67, LT TO 250+77, LT	10	TRANSITION TYPE A TO TYPE C
250+61, RT TO 250+73, RT	12	TYPE A, MC.101.01
250+79, RT TO 250+85, RT	6	TYPE A, MC.101.01
250+85, RT TO 250+95, RT	10	TRANSITION TYPE A TO TYPE C

DRAINAGE STRUCTURE SCHEDULE				
NO	STATION / OFFSET	TC/TG	INV. OUT	REMARKS
I-40	250+75.9, 13.4' RT	298.50	296.92	MODIFIED CURB INLET
CO-1130	250+72.5, 17.2' RT	-	-	CLEANOUT
OW-1140	250+48.2, 17.3' LT	-	-	OBSERVATION WELL
I-41	250+52.1, 12.4' LT	296.50	294.92	MODIFIED CURB INLET

CONCRETE EDGING				
FROM		TO		QTY
STA	ELEV	STA	ELEV	LF
250+39.26	296.15	250+49.15	296.50	9.8
250+55.15	296.75	250+68.22	297.00	13.1
250+63.99	298.15	250+72.88	298.50	8.9
250+78.88	298.74	250+84.94	298.85	6.1

PIPE SCHEDULE				
FROM	TO	SIZE (IN)	TYPE	LENGTH (LF)
250+72.5	250+66.6	6	PERF. PVC	6
250+66.6	250+56.2	6	PVC	11

10' 0 10' 20'
SCALE: 1"=10'

McCORMICK TAYLOR
509 South Exeter Street
4th Floor
Baltimore, Maryland 21202
(410) 662-7400

PLAN AND PROFILE - BMP 113 & 114

FRANKLIN KNOLLS-PHASE 3

SLIGO (13th) ELECTION DISTRICT
PARCEL X, SUBDIVISION X, LIBER X FOLIO X
MONTGOMERY COUNTY, MARYLAND

CLIENT: MONTGOMERY COUNTY DEPT OF ENVIRONMENTAL PROTECTION
255 ROCKVILLE PIKE, RM. 120
ROCKVILLE, MD 20850-4166
MR. PAUL BOGLE, P.E.
(240) 777-7757

DESIGN	KCS		
DRAFT	WJW		
APPROVED	HJD		
DATE	JUNE 2015		
SCALE	1"=10'		

SHEET 35 OF 43

FILE: 15616913, Revision LD_ Forest Edition and the Four Corners Area\Design\Engineering\PlanSet\FK P3\pltUD-P028_PFG_BMP-113_114.dgn
PLOTTED: Tuesday, June 02, 2015 AT 10:35 AM

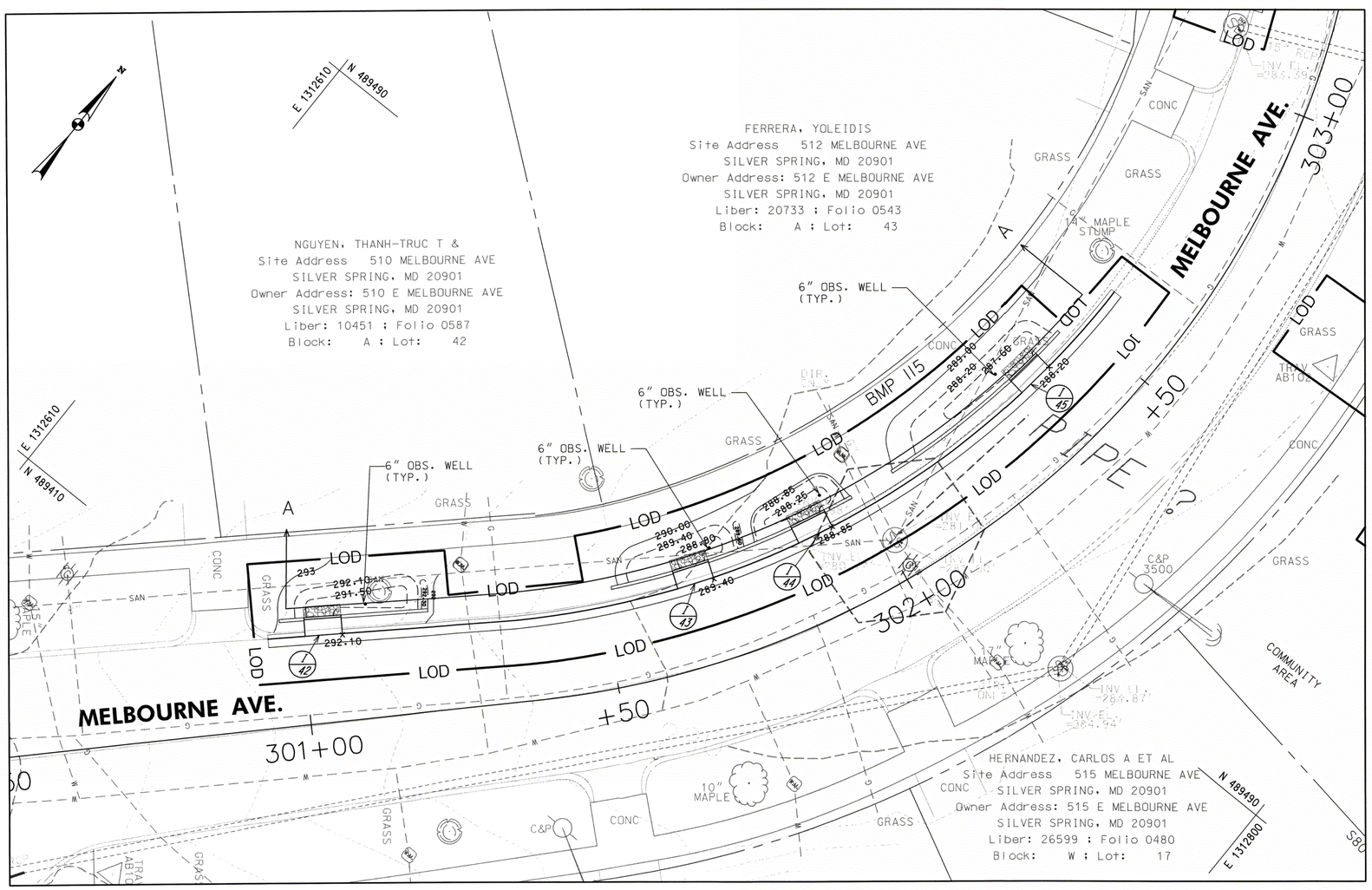

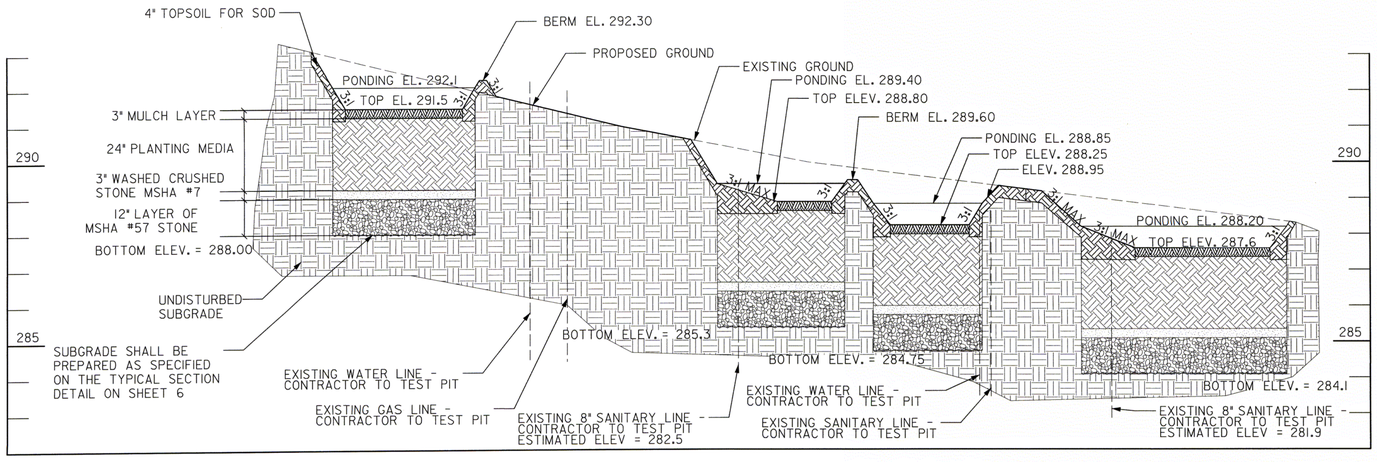

PROFILE (A-A) - RAIN GARDEN FACILITY (BMP 115)

SCALE: HORIZ. 1"=10'
VERT. 1"=2'

AS-BUILT DATA FOR FILTERS (BIORETENTION/RAIN GARDENS)

*TO BE COMPLETED BY THE CERTIFYING ENGINEER

TYPE OF FACILITY: RAIN GARDEN — BMP ID: BMP 115

FEATURE	DESIGN	*AS-BUILT
DRAINAGE AREA (AC)	0.73	
TOTAL IMPERVIOUS AREA (AC)	0.31	
TREATMENT VOLUME PROVIDED (CF)	473	
TARGET WQv TREATMENT VOLUME (CF)	1,145	
FILTER BED AREA (SF) [1]	150	
FILTER BED SURFACE ELEVATION	287.60, 288.25, 288.80, 291.50	
DESIGN POINT/MAX. PONDING ELEVATION	288.20, 288.85, 289.40, 292.10	
PONDED WATER SURFACE ELEVATION AREA (SF) [2]	389	
OUTLET PIPE (UNDERDRAIN) SIZE / INVERT ELEV.		
THICKNESS OF FILTER MEDIA	REFER TO PROFILE	
PLACEMENT OF GEOTEXTILE (SIDES ONLY)	REFER TO FACILITY TYP. SECTION – SHEET 6	
PLANTINGS	REFER TO LANDSCAPE PLAN – SHEET 43	
COMPOSITION OF FILTER MEDIA	REFER TO MCDEP SPECIFICATIONS	

*NOTES:
1. "FILTER BED AREA (SF)" REPRESENTS THE EXPOSED SURFACE AREA AT THE PROPOSED "FILTER BED SURFACE ELEVATION".
2. FOR MATERIAL QUANTITY ESTIMATIONS, THE PLANTING MEDIA, STONE, MULCH, ETC. SHOULD BE BASED ON THE AREA OF "PONDED WATER SURFACE ELEVATION AREA (SF)".
3. CONTRACTOR SHALL TEST PIT UTILITIES PRIOR TO CONSTRUCTION. IF UTILITY IS UNAVOIDABLE, CONTRACTOR SHALL REFER TO SHEET 6 FOR UTILITY CROSSING DETAIL WITHIN THE FACILITY.

COMBINATION CONC. CURB AND GUTTER

STA. TO STA.	L.F.	REMARKS
300+95, LT TO 301+01, LT	6	TRANSITION TYPE C TO TYPE A
301+07, LT TO 301+64, LT	55	TYPE A, MC.101.01
301+70, LT TO 301+87, LT	15	TYPE A, MC.101.01
301+93, LT TO 302+34, LT	38	TYPE A, MC.101.01
302+41, LT TO 302+47, LT	6	TYPE A, MC.101.01
302+47, LT TO 302+59, LT	10	TRANSITION TYPE A TO TYPE C

DRAINAGE STRUCTURE SCHEDULE

NO	STATION / OFFSET	TC/TG	INV. OUT	REMARKS
OW-1150	301+10.7, 18.4' LT	-	-	OBSERVATION WELL
I-42	301+03.5, 14.1' LT	292.60	291.02	MODIFIED CURB INLET
OW-1151	301+71.2, 18.0' LT	-	-	OBSERVATION WELL
I-43	301+67.0, 13.3' LT	289.90	288.32	MODIFIED CURB INLET
OW-1152	301+93.7, 18.7' LT	-	-	OBSERVATION WELL
I-44	301+89.9, 13.2' LT	289.35	287.77	MODIFIED CURB INLET
OW-1153	302+33.1, 18.2' LT	-	-	OBSERVATION WELL
I-45	302+37.6, 13.1' LT	288.70	287.12	MODIFIED CURB INLET

CONCRETE EDGING

FROM		TO		QTY
STA	ELEV	STA	ELEV	LF
300+96.65	293.00	301+00.64	292.90	4.0
301+06.64	292.60	301+20.66	292.30	14.0
301+52.15	290.35	301+63.59	290.12	10.3
301+70.32	289.90	301+86.49	289.50	14.5
301+93.23	289.35	301+98.70	289.05	4.9
302+07.30	289.00	302+34.27	288.77	24.1
302+41.00	288.70	302+46.68	288.45	5.1

NOTE: CONTRACTOR SHALL INSTALL ALL CURB AND GUTTER AND CONCRETE EDGING AT EXISTING ARC ALIGNMENT

10' 0 10' 20'
SCALE: 1"=10'

McCORMICK TAYLOR
509 South Exeter Street
4th Floor
Baltimore, Maryland 21202
(410) 662-7400

PLAN AND PROFILE - BMP 115

FRANKLIN KNOLLS-PHASE 3

SLIGO (13th) ELECTION DISTRICT
PARCEL X, SUBDIVISION X, LIBER X FOLIO X
MONTGOMERY COUNTY, MARYLAND

CLIENT: MONTGOMERY COUNTY DEPT OF ENVIRONMENTAL PROTECTION
255 ROCKVILLE PIKE, RM. 120
ROCKVILLE, MD 20850-4166
MR. PAUL BOGLE, P.E.
(240) 777-7757

DESIGN	KCS	APPROVED	HJD
DRAFT	WJW	DATE	JUNE 2015
		SCALE	1"=10'

SHEET 36 OF 43

FILE: I:\5150\13 - Roadway\LD - Forest Edges and the Four Corners Area\Design\Engineering\Plan\Set\FK P3\pdf\D-P020_FK3_BMP-115.dgn
PLOTTED: Tuesday, June 02, 2015 AT 10:35 AM

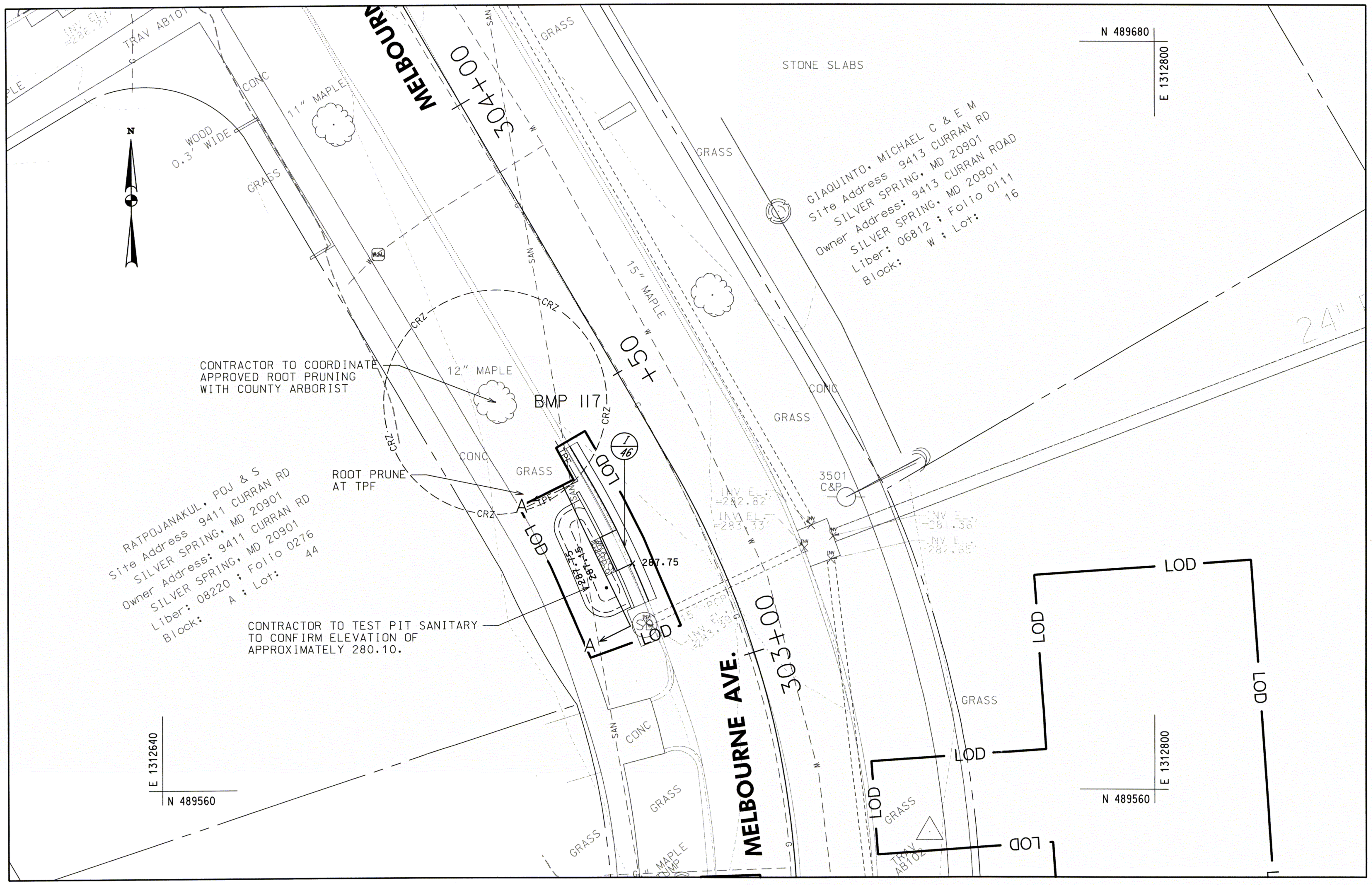

AS-BUILT DATA FOR FILTERS (BIORETENTION/RAIN GARDENS)

*TO BE COMPLETED BY THE CERTIFYING ENGINEER

TYPE OF FACILITY: RAIN GARDEN — BMP ID: 117

FEATURE	DESIGN	*AS-BUILT
DRAINAGE AREA (AC)	0.18	
TOTAL IMPERVIOUS AREA (AC)	0.06	
TREATMENT VOLUME PROVIDED (CF)	118	
TARGET WQv TREATMENT VOLUME (CF)	229	
FILTER BED AREA (SF) [1]	45	
FILTER BED SURFACE ELEVATION	287.15	
DESIGN POINT/MAX. PONDING ELEVATION	287.75	
PONDED WATER SURFACE ELEVATION AREA (SF) [2]	95	
OUTLET PIPE (UNDERDRAIN) SIZE / INVERT ELEV.		
THICKNESS OF FILTER MEDIA	REFER TO PROFILE	
PLACEMENT OF GEOTEXTILE (SIDES ONLY)	REFER TO FACILITY TYP. SECTION – SHEET 6	
PLANTINGS	REFER TO LANDSCAPE PLAN – SHEET 43	
COMPOSITION OF FILTER MEDIA	REFER TO MCDEP SPECIFICATIONS	

*NOTES:

1. "FILTER BED AREA (SF)" REPRESENTS THE EXPOSED SURFACE AREA AT THE PROPOSED "FILTER BED SURFACE ELEVATION".
2. FOR MATERIAL QUANTITY ESTIMATIONS, THE PLANTING MEDIA, STONE, MULCH, ETC. SHOULD BE BASED ON THE AREA OF "PONDED WATER SURFACE ELEVATION AREA (SF)".
3. CONTRACTOR SHALL TEST PIT UTILITIES PRIOR TO CONSTRUCTION. IF UTILITY IS UNAVOIDABLE, CONTRACTOR SHALL REFER TO SHEET 6 FOR UTILITY CROSSING DETAIL WITHIN THE FACILITY.

COMBINATION CONC. CURB AND GUTTER

STA. TO STA.	L.F.	REMARKS
303+14, LT TO 303+22, LT	8	TYPE A, MC.101.01
303+28, LT TO 303+34, LT	6	TYPE A, MC.101.01
303+34, LT TO 303+44, LT	10	TRANSITION TYPE A TO TYPE C

DRAINAGE STRUCTURE SCHEDULE

NO	STATION / OFFSET	TC/TG	INV. OUT	REMARKS
OW-1170	303+19.5, 18.4' LT	-	-	OBSERVATION WELL
I-46	303+24.7, 12.9' LT	288.25	286.67	MODIFIED CURB INLET

CONCRETE EDGING

FROM		TO		QTY
STA	ELEV	STA	ELEV	LF
303+14.17	288.10	303+21.48	288.25	6.5
303+28.19	288.25	303+36.76	288.40	8.1

NOTE: CONTRACTOR SHALL INSTALL ALL CURB AND GUTTER AND CONCRETE EDGING AT EXISTING ARC ALIGNMENT

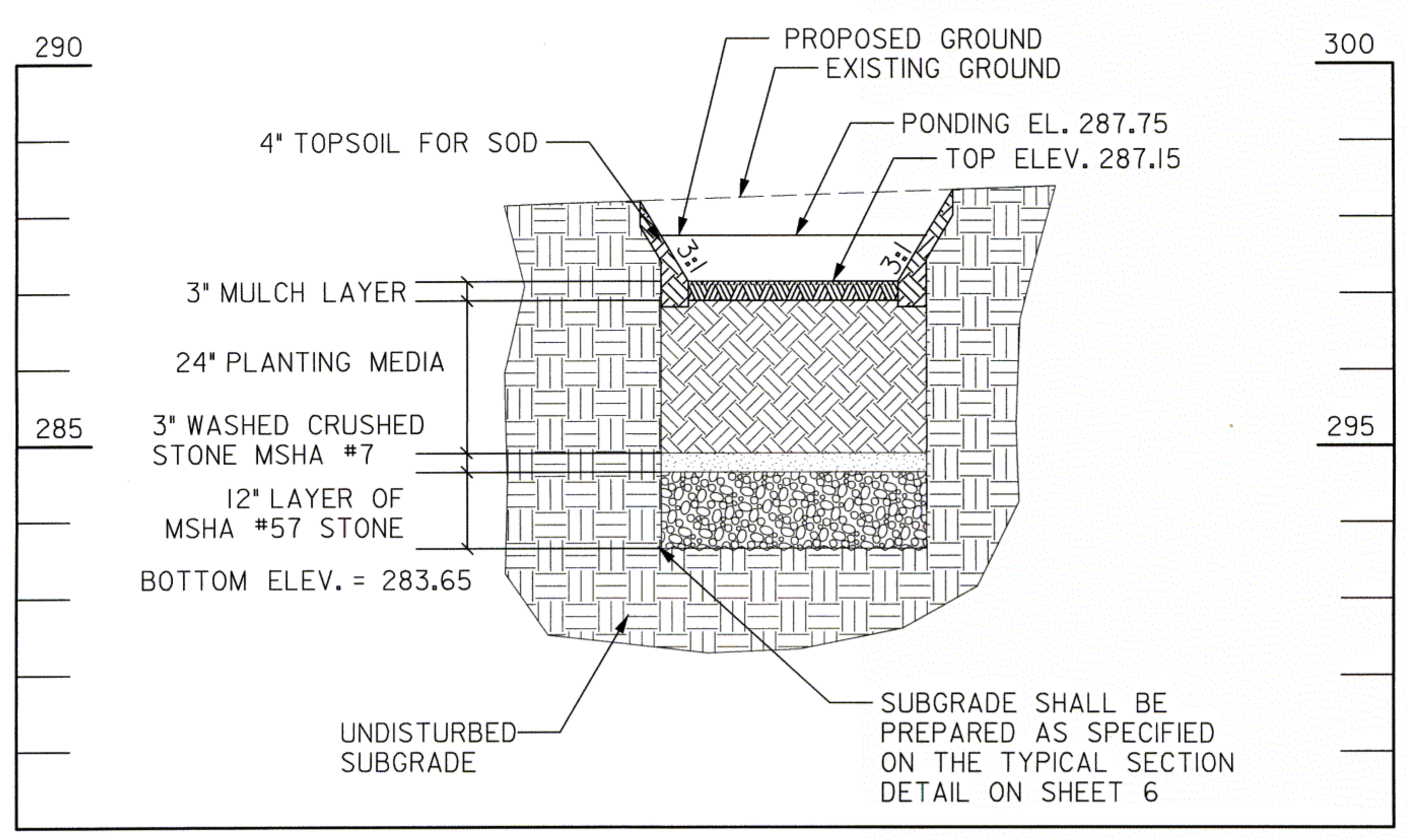

PROFILE (A-A) - RAIN GARDEN FACILITY (BMP 117)

SCALE: HORIZ. 1"=10'
VERT. 1"=2'

10' 0 10' 20'
SCALE: 1"=10'

McCORMICK TAYLOR
509 South Exeter Street
4th Floor
Baltimore, Maryland 21202
(410) 662-7400

PLAN AND PROFILE - BMP 117

FRANKLIN KNOLLS-PHASE 3

SLIGO (13th) ELECTION DISTRICT
PARCEL X, SUBDIVISION X, LIBER X FOLIO X
MONTGOMERY COUNTY, MARYLAND

CLIENT: MONTGOMERY COUNTY DEPT OF ENVIRONMENTAL PROTECTION
255 ROCKVILLE PIKE, RM. 120
ROCKVILLE, MD 20850-4166
MR. PAUL BOGLE, P.E.
(240) 777-7757

DESIGN	KCS
DRAFT	WJW
APPROVED	HJD
DATE	JUNE 2015
SCALE	1"=10'

FILE: I:\5182\13 - Roadway LID – Forest Estates and the Four Corners Area\Design\Engineering\PlanSet\FK P3\pHD-P030_FK3_BMP-117.dgn
PLOTTED: Tuesday, June 02, 2015 AT 10:35 AM

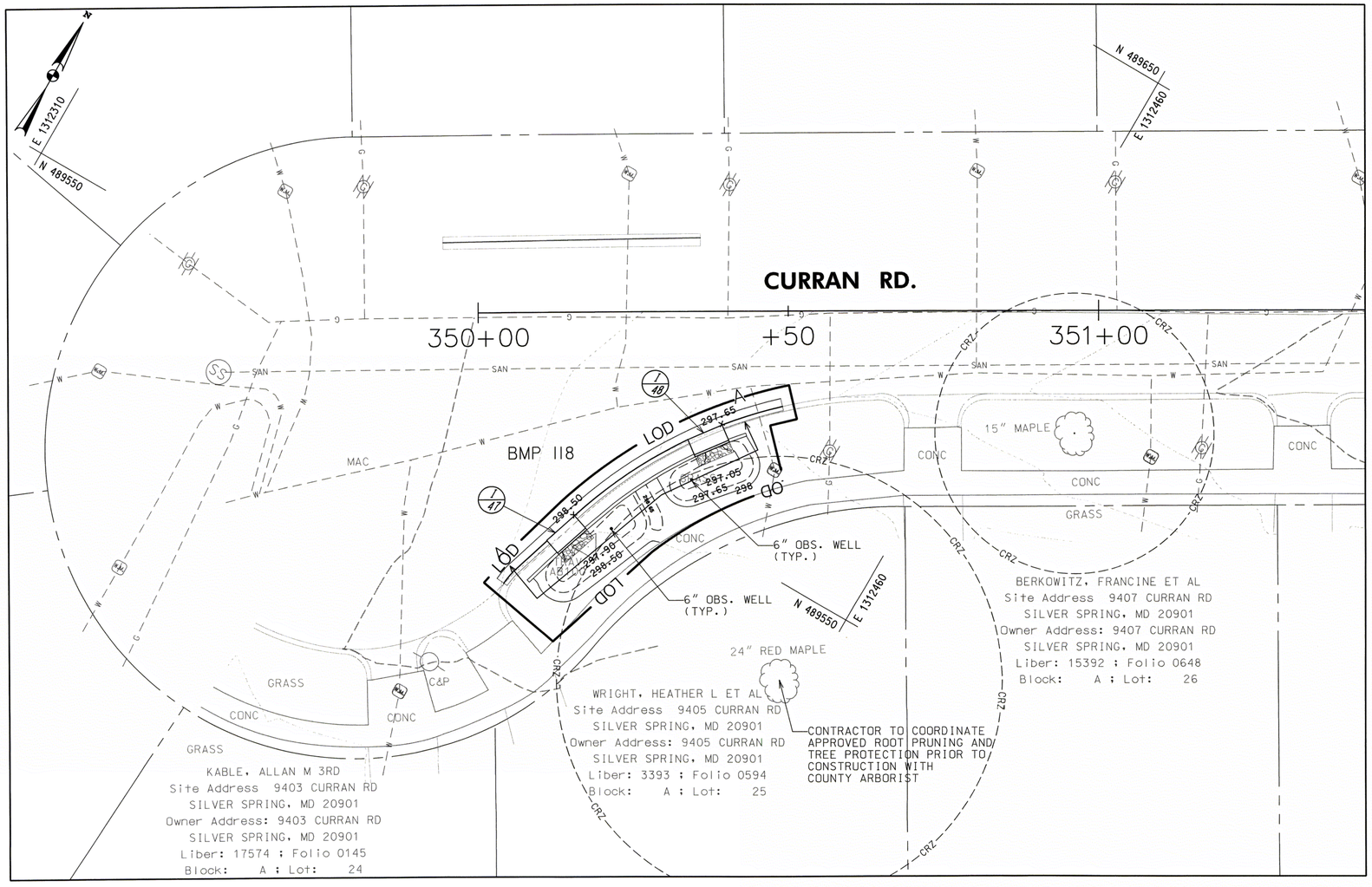

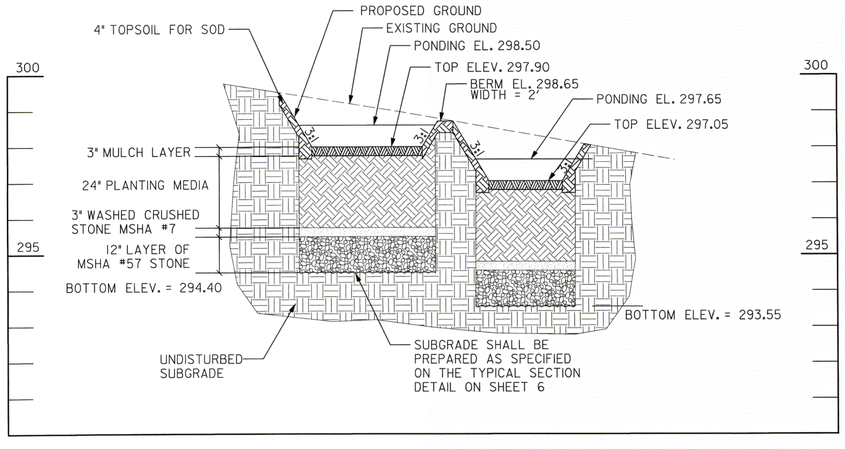

PROFILE (A-A) - RAIN GARDEN FACILITY (BMP 118)

SCALE: HORIZ. 1"=10'
VERT. 1"=2'

AS-BUILT DATA FOR FILTERS (BIORETENTION/RAIN GARDENS)

*TO BE COMPLETED BY THE CERTIFYING ENGINEER

TYPE OF FACILITY: RAIN GARDEN — BMP ID: BMP 118

FEATURE	DESIGN	*AS-BUILT
DRAINAGE AREA (AC)	0.68	
TOTAL IMPERVIOUS AREA (AC)	0.23	
TREATMENT VOLUME PROVIDED (CF)	239	
TARGET WQv TREATMENT VOLUME (CF)	875	
FILTER BED AREA (SF) [1]	92	
FILTER BED SURFACE ELEVATION	297.90, 297.05	
DESIGN POINT/MAX. PONDING ELEVATION	298.50, 297.65	
PONDED WATER SURFACE ELEVATION AREA (SF) [2]	192	
OUTLET PIPE (UNDERDRAIN) SIZE / INVERT ELEV.		
THICKNESS OF FILTER MEDIA	REFER TO PROFILE	
PLACEMENT OF GEOTEXTILE (SIDES ONLY)	REFER TO FACILITY TYP. SECTION – SHEET 6	
PLANTINGS	REFER TO LANDSCAPE PLAN – SHEET 43	
COMPOSITION OF FILTER MEDIA	REFER TO MCDEP SPECIFICATIONS	

*NOTES:
1. "FILTER BED AREA (SF)" REPRESENTS THE EXPOSED SURFACE AREA AT THE PROPOSED "FILTER BED SURFACE ELEVATION".
2. FOR MATERIAL QUANTITY ESTIMATIONS, THE PLANTING MEDIA, STONE, MULCH, ETC. SHOULD BE BASED ON THE AREA OF "PONDED WATER SURFACE ELEVATION AREA (SF)".
3. CONTRACTOR SHALL TEST PIT UTILITIES PRIOR TO CONSTRUCTION. IF UTILITY IS UNAVOIDABLE, CONTRACTOR SHALL REFER TO SHEET 6 FOR UTILITY CROSSING DETAIL WITHIN THE FACILITY.

COMBINATION CONC. CURB AND GUTTER

STA. TO STA.	L.F.	REMARKS
350+03, RT TO 350+11, RT	10	TRANSITION TYPE C TO TYPE A
350+15, RT TO 350+34, RT	22	TYPE A, MC.101.01
350+39, RT TO 350+49, RT	10	TRANSITION TYPE A TO TYPE C

DRAINAGE STRUCTURE SCHEDULE

NO	STATION / OFFSET	TC/TG	INV. OUT	REMARKS
OW-1180	350+21.3, 34.8' RT	-	-	OBSERVATION WELL
I-47	350+13.1, 34.7' RT	299.00	297.42	MODIFIED CURB INLET
OW-1181	350+34.3, 27.1' RT	-	-	OBSERVATION WELL
I-48	350+36.5, 19.5' RT	298.15	296.57	MODIFIED CURB INLET

CONCRETE EDGING

FROM		TO		QTY
STA	ELEV	STA	ELEV	LF
350+07.97	299.30	350+12.77	299.17	6.5
350+17.30	299.00	350+25.72	298.65	10.6
350+25.72	298.65	350+34.87	298.32	10.5
350+40.40	298.15	350+43.17	298.10	3.0

NOTE: CONTRACTOR SHALL INSTALL ALL CURB AND GUTTER AND CONCRETE EDGING AT EXISTING ARC ALIGNMENT

10' 0 10' 20'
SCALE: 1"=10'

McCORMICK TAYLOR
509 South Exeter Street
4th Floor
Baltimore, Maryland 21202
(410) 662-7400

PLAN AND PROFILE - BMP 118
FRANKLIN KNOLLS-PHASE 3
SLIGO (13th) ELECTION DISTRICT
PARCEL X, SUBDIVISION X, LIBER X FOLIO X
MONTGOMERY COUNTY, MARYLAND

CLIENT: MONTGOMERY COUNTY DEPT OF ENVIRONMENTAL PROTECTION
255 ROCKVILLE PIKE, RM. 120
ROCKVILLE, MD 20850-4166
MR. PAUL BOGLE, P.E.
(240) 777-7757

DESIGN	KCS	SHEET	38
DRAFT	WJW	OF	43
APPROVED	HJD		
DATE	JUNE 2015		
SCALE	1"=10'		

FILE: I:\5152\13 - Roadway LD - Forest Estates and the Four Corners Area\Design\Engineering\PlanSet\FK P3\pwHD-P031_FK3_BMP-118.dgn
PLOTTED: Tuesday, June 02, 2015 AT 10:35 AM

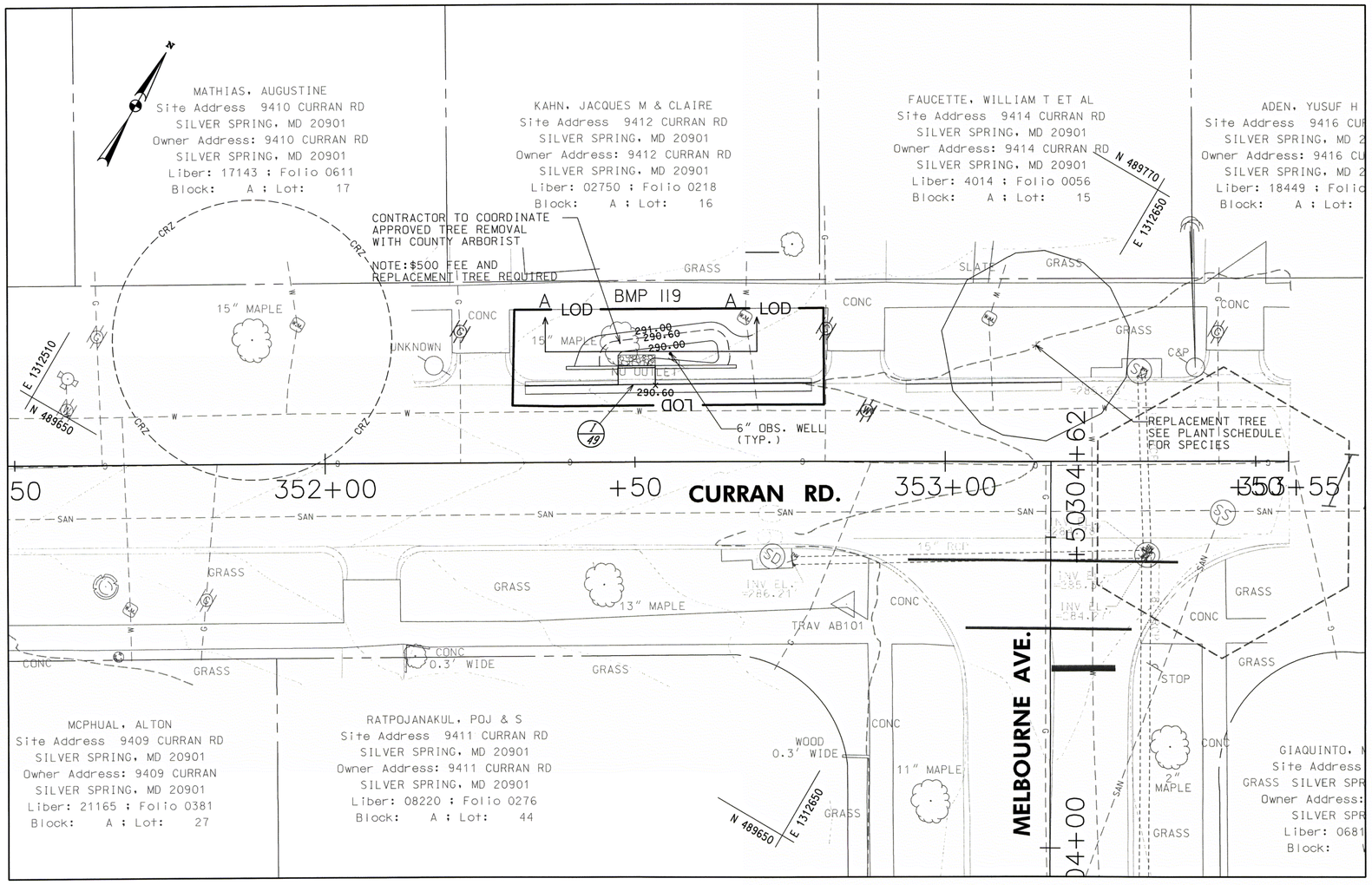

AS-BUILT DATA FOR FILTERS (BIORETENTION/RAIN GARDENS)

*TO BE COMPLETED BY THE CERTIFYING ENGINEER

TYPE OF FACILITY: RAIN GARDEN — BMP ID: BMP 119

FEATURE	DESIGN	*AS-BUILT
DRAINAGE AREA (AC)	4.74	
TOTAL IMPERVIOUS AREA (AC)	1.54	
TREATMENT VOLUME PROVIDED (CF)	120	
TARGET WQv TREATMENT VOLUME (CF)	5,891	
FILTER BED AREA (SF) [1]	41	
FILTER BED SURFACE ELEVATION	290.00	
DESIGN POINT/MAX. PONDING ELEVATION	290.60	
PONDED WATER SURFACE ELEVATION AREA (SF) [2]	98	
OUTLET PIPE (UNDERDRAIN) SIZE / INVERT ELEV.		
THICKNESS OF FILTER MEDIA	REFER TO PROFILE	
PLACEMENT OF GEOTEXTILE (SIDES ONLY)	REFER TO FACILITY TYP. SECTION – SHEET 6	
PLANTINGS	REFER TO LANDSCAPE PLAN – SHEET 43	
COMPOSITION OF FILTER MEDIA	REFER TO MCDEP SPECIFICATIONS	

*NOTES:
1. "FILTER BED AREA (SF)" REPRESENTS THE EXPOSED SURFACE AREA AT THE PROPOSED "FILTER BED SURFACE ELEVATION".
2. FOR MATERIAL QUANTITY ESTIMATIONS, THE PLANTING MEDIA, STONE, MULCH, ETC. SHOULD BE BASED ON THE AREA OF "PONDED WATER SURFACE ELEVATION AREA (SF)".
3. CONTRACTOR SHALL TEST PIT UTILITIES PRIOR TO CONSTRUCTION. IF UTILITY IS UNAVOIDABLE, CONTRACTOR SHALL REFER TO SHEET 6 FOR UTILITY CROSSING DETAIL WITHIN THE FACILITY.

COMBINATION CONC. CURB AND GUTTER

STA. TO STA.	L.F.	REMARKS
352+32, LT TO 352+42, LT	10	TRANSITION TYPE C TO TYPE A
352+42, LT TO 352+47, LT	5	TYPE A, MC.101.01
352+53, LT TO 352+68, LT	15	TYPE A, MC.101.01
352+68, LT TO 352+78, LT	10	TRANSITION TYPE A TO TYPE C

DRAINAGE STRUCTURE SCHEDULE

NO	STATION / OFFSET	TC/TG	INV. OUT	REMARKS
OW-1190	352+55.8, 17.4' LT	-	-	OBSERVATION WELL
I-49	352+50.3, 12.5' LT	291.10	289.52	MODIFIED CURB INLET

CONCRETE EDGING

FROM		TO		QTY
STA	ELEV	STA	ELEV	LF
352+38.96	291.45	352+47.30	291.24	8.3
352+53.30	291.10	352+66.35	290.80	13.1

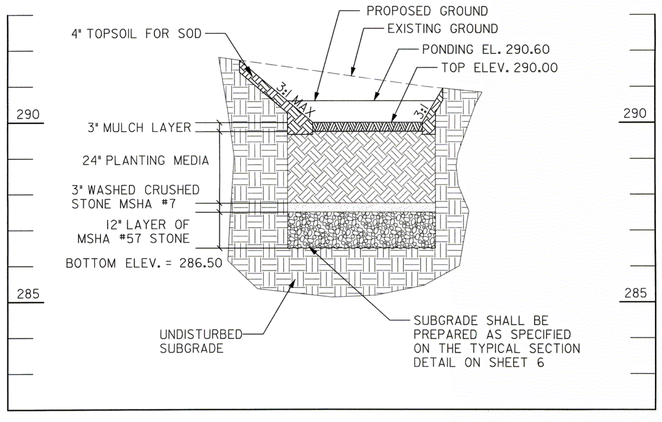

PROFILE (A-A) - RAIN GARDEN FACILITY (BMP 119)

SCALE: HORIZ. 1"=10'
VERT. 1"=2'

10' 0 10' 20'
SCALE: 1"=10'

McCORMICK TAYLOR
509 South Exeter Street
4th Floor
Baltimore, Maryland 21202
(410) 662-7400

PLAN AND PROFILE - BMP 119

FRANKLIN KNOLLS-PHASE 3
SLIGO (13th) ELECTION DISTRICT
PARCEL X, SUBDIVISION X, LIBER X FOLIO X
MONTGOMERY COUNTY, MARYLAND

CLIENT: MONTGOMERY COUNTY DEPT OF ENVIRONMENTAL PROTECTION
255 ROCKVILLE PIKE, RM. 120
ROCKVILLE, MD 20850-4166
MR. PAUL BOGLE, P.E.
(240) 777-7757

DESIGN	KCS	DRAFT	WJW	APPROVED HJD
DATE	JUNE 2015	SCALE	1"=10'	

SHEET 39 OF 43

FILE: 15182I13 - Roadway, LD - Forest Estates and the Four Corners Area\Design\Engineering\PlanSet\FK P3\pltHD-P032_FK3_BMP-119.dgn
PLOTTED: Tuesday, June 02, 2015 AT 10:35 AM

MONTGOMERY COUNTY GOVERNMENT
STANDARD EROSION AND SEDIMENT CONTROL NOTES (REV. August 2008)

1. The permittee shall notify the Department of Permitting Services (DPS) forty–eight (48) hours before commencing any land disturbing activity and, unless waived by the Department, shall be required to hold a pre–construction meeting between them or their representative, their engineer and an authorized representative of the Department.

2. The permittee must obtain inspection and approval by DPS at the following points:
A. At the required pre–construction meeting.
B. Following installation of sediment control measures and prior to any other land disturbing activity.
C. During the installation of a sediment basin or stormwater management structure at the required inspection points (see Inspection Checklist on plan). Notification prior to commencing construction is mandatory.
D. Prior to removal or modification of any sediment control structure(s).
E. Prior to final acceptance.

3. The permittee shall construct all erosion and sediment control measures per the approved plan and construction sequence, shall have them inspected and approved by the Department prior to beginning any other land disturbances, shall ensure that all runoff from disturbed areas is directed to the sediment control devices, and shall not remove any erosion or sediment control measure without prior permission from the Department.

4. The permittee shall protect all points of construction ingress and egress to prevent the deposition of materials onto traversed public thoroughfare(s). All materials deposited onto public thoroughfare(s) shall be removed immediately.

5. The permittee shall inspect periodically and maintain continuously in effective operating condition, all erosion and sediment control measures until such time as they are removed with prior permission from the Department. The permittee is responsible for immediately repairing or replacing any sediment control measures which have been damaged or removed by the permittee or any other person.

6. Following initial soil disturbance or re–disturbance, permanent or temporary stabilization must be completed within:
a) Three (3) calendar days as to the surface of all perimeter dikes, swales, ditches, perimeter slopes and all slopes steeper than 3 horizontal to 1 vertical (3:1); and
b) Seven (7) calendar days as to all other disturbed or graded areas on the project site not under active grading. All areas disturbed outside of the perimeter sediment control system must be minimized and stabilized immediately. Maintenance must be performed as necessary to ensure continued stabilization.

7. The permittee shall apply sod, seed, and anchored straw mulch, or other approved stabilization measures to all disturbed areas within seven (7) calendar days after stripping and grading activities have ceased on that area. Maintenance shall be performed as necessary to ensure continued stabilization. Active construction areas such as borrow or stockpile areas, roadway improvements, and areas within fifty (50) feet of a building under construction may be exempt from this requirement, provided that erosion and sediment control measures are installed and maintained to protect those areas.

8. Prior to removal of sediment control measures, the permittee shall stabilize all contributory disturbed areas with required soil amendments and topsoil, using sod or an approved permanent seed mixture and an approved anchored mulch. Wood fiber mulch may only be used in seeding season when the slope does not exceed 10% and grading has been done to promote sheet flow drainage. Areas brought to finished grade during the seeding season shall be permanently stabilized within seven (7) calendar days of establishment. When property is brought to finished grade during the months of November through February, and permanent stabilization is found to be impractical, an approved temporary seed and straw anchored mulch shall be applied to disturbed areas. The final permanent stabilization of such property shall be completed prior to the following April 15.

9. The site permit, work, materials, approved SCSM plans, and test reports shall be available at the site for inspection by duly authorized officials of Montgomery County.

10. Surface drainage flows over unstabilized cut and fill slopes shall be controlled by either preventing drainage flows from traversing the slopes or by installing mechanical devices to lower the water down slope without causing erosion. Dikes shall be installed and maintained at the top of cut or fill slopes until the slope and drainage area to it are fully stabilized, at which time they must be removed and final grading done to promote sheet flow drainage. Mechanical devices must be provided at points of concentrated flow where erosion is likely to occur.

11. Permanent swales or other points of concentrated water flow shall be stabilized within 3 calendar days of establishment with sod or seed with an approved erosion control matting or by other approved stabilization measures.

12. Sediment control devices shall be removed, with permission of the Department, within thirty (30) calendar days following establishment of permanent stabilization in all contributory drainage areas. Stormwater management structures used temporarily for sediment control shall be converted to the permanent configuration within this time period as well.

13. No permanent cut or fill slope with a gradient steeper than 3:1 will be permitted in lawn maintenance areas or on residential lots. A slope gradient of up to 2:1 will be permitted in non– maintenance areas provided that those areas are indicated on the erosion and sediment control plan with a low–maintenance ground cover specified for permanent stabilization. Slope gradient steeper than 2:1 will not be permitted with vegetative stabilization.

14. The permittee shall install a splashblock at the bottom of each downspout unless the downspout is connected by a drain line to an acceptable outlet.

15. For finished grading, the permittee shall provide adequate gradients so as to prevent water from standing on the surface of lawns more than twenty–four (24) hours after the end of a rainfall, except in designated drainage courses and swale flow areas, which may drain as long as forty–eight (48) hours after the end of a rainfall.

16. Sediment traps or basins are not permitted within 20 feet of a building which is existing or under construction. No building may be constructed within 20 feet of a sediment trap or basin.

17. All inlets in non–sump areas shall have asphalt berms installed at the time of base paving establishment.

18. The sediment control inspector has the option of requiring additional sediment control measures, as deemed necessary.

19. All trap elevations are relative to the outlet elevation, which must be on existing undisturbed ground.

20. Vegetative stabilization shall be performed in accordance with the Standards and Specifications for Soil Erosion and Sediment Control.

21. Sediment trap(s)/basin(s) shall be cleaned out and restored to the original dimensions when sediment has accumulated to the point of one–half (1/2) the wet storage depth of the trap/basin (1/4 the wet storage depth for ST–III) or when required by the sediment control inspector.

22. Sediment removed from traps/basins shall be placed and stabilized in approved areas, but not within a floodplain.

23. All sediment basins and traps must be surrounded with a welded wire safety fence. The fence must be at least 42 inches high, have posts spaced no farther apart than 8 feet, have mesh openings no greater the two inches in width and four inches in height, with a minimum of 14 gauge wire. Safety fence must be maintained in good condition at all times.

24. No excavation in the areas of existing utilities is permitted unless their location has been determined. Call "Miss Utility" at 1–800–257–7777, 48 hours prior to the start of work.

25. Off–site spoil or borrow areas must have prior approval by DPS.

26. Sediment trap/basin dewatering for cleanout or repair may only be done with the DPS inspector's permission. The inspector must approve the dewatering method for each application. The following methods may be considered:

A. Pump discharge may be directed to another on–site sediment trap or basin, provided it is of sufficient volume and the pump intake is floated to prevent agitation or suction of deposited sediments; or

B. The pump intake may utilize a Removable Pumping Station and must discharge into an undisturbed area through a non–erosive outlet; or

C. The pump intake may be floated and discharge into a Dirt Bag (12 oz. non–woven fabric), or approved equivalent, located in an undisturbed buffer area.

Remember: Dewatering operation and method must have prior approval by the DPS inspector.

27. The permittee must notify the Department of all utility construction activities within the permitted limits of disturbance prior to the commencement of those activities.

28. Topsoil must be applied to all pervious areas within the limits of disturbance prior to permanent stabilization in accordance with MDE *Standards and Specifications for Soil Preparation, Topsoiling, and Soil Amendments*.

TEMPORARY SEEDING SPECIFICATIONS

1. TEMPORARY SEEDING: SHALL BE DONE BETWEEN MARCH 1 – MAY 15 AND AUGUST 15 – OCTOBER 15. ALL OTHER DISTURBED AREAS REQUIRING STABILIZATION NOT WITHIN THE SEEDING DATES SHALL BE MULCHED.

2. ALL TEMPORARY SEEDED AREAS SHALL BE MULCHED IMMEDIATELY AFTER SEEDING. MULCH MATERIALS SHOULD BE UNWEATHERED, UNCHOPPED, SMALL GRAIN STRAW SPREAD AT A RATE OF 2 TONS PER ACRE. THE MULCH SHALL BE ANCHORED IMMEDIATELY AFTER PLACEMENT WITH ASPHALT, PEG AND TWINE, PLASTIC NETTINGS OR BY A MULCH ANCHORING TOOL.

3. LIME AND FERTILIZER SHALL BE REQUIRED FOR TEMPORARY SEEDING IN ACCORDANCE WITH THE FOLLOWING PROCEDURES:
   1. PULVERIZED DOLOMITIC LIMESTONE IS TO BE APPLIED AT THE RATE OF 100 LBS. PER 1,000 SQ. FT.
   2. FERTILIZER SHALL BE 10–10–10 OR EQUIVALENT AND APPLIED AT THE RATE OF 15 LBS. PER 1,000 SQ. FT.

PERMANENT SEEDING AND SODDING SPECIFICATIONS

1. ALL DISTURBED AREAS SHALL BE SEEDED AND MULCHED.

2. SOIL PREPARATION: WEEDS AND UNDESIRABLE GRASSES GROWING ON EXISTING GRADE THAT IS TO BE SEEDED AND/OR SODDED MUST BE CUT AND REMOVED BEFORE SOIL PREPARATION BEGINS. BEFORE SEEDING OR SODDING ALL SOILS SHALL BE LOOSENED BY MEANS OF FILLING AND/OR DISCING. ALL TRASH, DEBRIS, ROOTS, BRUSH, WIRE, ROCKS, STONE AND OTHER FOREIGN DEBRIS OVER ONE INCH IN DIAMETER SHALL BE REMOVED PRIOR TO SEEDING AND/OR SODDING, TO A DEPTH OF FOUR (4) INCHES.

3. TOPSOIL: THE MINIMUM ORGANIC CONTENT IN THE MSHA SPECIFICATION REFERENCED SHALL BE INCREASED TO 10%. ORGANIC MATTER SHALL BE ADDED USING COMPOST MATERIAL MEETING THE STANDARD REQUIREMENTS IN THE SPECS.

4. SEEDED PREPARATION: THE TOP LAYER OF SOIL SHALL BE LOOSENED BY DISCLING OR RAKING (SHALL BE DONE ON CONTOUR) AT A DEPTH OF AT LEAST 3", BEFORE SEEDING OCCURS. APPLY 100LBS PER 1,000 SQ.FT. OF LIME AND 15 LB. PER 1,000 SQ.FT. OF 10–10–10 FERTILIZER OR EQUIVALENT. THOROUGHLY MIX INTO SOIL TO A MINIMUM OF 3".

5. SEEDING: USE 40% KENTUCKY BLUEGRASS, 10% ANNUAL RYE AND 25% RED FESCUE AT THE RATE OF 250 LB. PER ACRE.

6. MULCHING: USE CLEAN, UNWEATHERED, UNCHOPPING SMALL GRAIN STRAW AT THE RATE OF 1.5 TO 2 TONS PER ACRE ANCHORED DOWN WITH CUTBACK ASPHALT AT THE RATE OF 5–8 GALLONS PER 1000 SQ. FT.

7. DISCING AND HARROWING SHALL BE DONE ON CONTOUR.

8. SOD SHALL BE STATE APPROVED SOD INSPECTED AND APPROVED BY MD. DEPT. OF AGRICULTURE. ALL SOD SHALL BE LAID ON SITE NO MORE THAN 36 HOURS AFTER HARVEST, AND SHALL BE A MIXTURE OF 60% (MIN.) TALL FESCUE AND 40% (MIN.) KENTUCKY BLUEGRASS.

9. SOD PEGS OR STAKES BE UNTREATED WOOD PEGS DRIVEN THROUGH, AND FLUSH WITH SOD. ALL SLOPES WITH A GRADE 3 TO 1 OR STEEPER SHALL BE PEGGED AT A MINIMUM OF 4 PEGS PER SQUARE YARD OF SOD.

10. SODDING, SEEDING AND MULCHING MAY BE DONE IMMEDIATELY AFTER FINAL GRADING, PROVIDED THAT THE BED HAS REMAINED IN GOOD, FRIABLE CONDITION AND HAS NOT BECOME MUDDY OR HARD. IF IT HAS BECOME HARD, IT SHALL BE FILLED TO FRIABLE CONDITION AGAIN.

11. SEED SHALL BE WORKED INTO THE TOP 3" OF SOIL BY MEANS OF RAKING, WIRE DRAG OR OTHER APPROVED EQUIPMENT. DURING PERIODS OF HIGH TEMPERATURE AND/OR DROUGHT. THE SOIL SHALL BE WATERED IMMEDIATELY PRIOR TO LAYING THE SOD. ALL SOD SHALL BE LAID AT RIGHT ANGLES TO SLOPES. NO SOD SHALL BE APPLIED TO FROZEN GROUND AND NO FROZEN SOD IS TO BE LAID. WATERING SHALL COMMENCE IMMEDIATELY DURING OR AFTER THE LAYING OPERATION, AND SHALL BE SUFFICIENT TO THOROUGHLY WET THE SOD ROOTS AND THE SOIL BELOW.

12. PERMANENT SEEDING: SHALL BE DONE MARCH 1 – MAY 15 AND AUGUST 15 – OCTOBER 15. IRRIGATION FOR PERMANENT SEEDING SHALL BE DONE BETWEEN MAY 15 AND AUGUST 14.

13. SEDIMENT CONTROL DEVICES (DITCHES, DIKES, TRAPS, ETC.) ARE TO REMAIN IN PLACE UNTIL CONTRIBUTING WATERSHED HAS BEEN STABILIZED. MAINTENANCE TO SEDIMENT CONTROL DEVICES DURING THE UNDER GOING GRADING, CONSTRUCTION AND DEVELOPMENT SHOULD BE DONE AS NECESSARY. REMOVAL OF THESE DEVICES SHALL BE WITH THE APPROVAL OF THE MONTGOMERY COUNTY SEDIMENT CONTROL INSPECTOR.

EARTH FILL FOR FACILITY EMBANKMENTS

MATERIAL
THE FILL MATERIAL SHALL BE TAKEN FROM APPROVED DESIGNATED BORROW AREAS. IT SHALL BE FREE OF ROOTS, STUMPS, WOOD, RUBBISH, STONES GREATER THAN SIX INCHES, FROZEN OR OTHER OBJECTIONABLE MATERIALS. CONSIDERATION MAY BE GIVEN TO THE USE OF OTHER MATERIALS IN THE EMBANKMENT IF DESIGN AND CONSTRUCTION ARE SUPERVISED BY A GEOTECHNICAL ENGINEER AND APPROVED BY MCDPS.

PLACEMENT
AREAS ON WHICH FILL IS TO BE PLACED SHALL BE SCARIFIED PRIOR TO PLACEMENT OF FILL. FILL MATERIALS SHALL BE PLACED IN MAXIMUM EIGHT INCH HEIGHT (BEFORE COMPACTION) LAYERS, WHICH ARE TO BE CONTINUOUS OVER THE ENTIRE LENGTH OF THE FILL. THE MOST PERMEABLE BORROW MATERIAL SHALL BE PLACED IN THE DOWNSTREAM PORTIONS OF THE EMBANKMENT. PIPES OR UNDERDRAINS MUST BE INSTALLED CONCURRENT WITH EMBANKMENT CONSTRUCTION TO AVOID EXCAVATION INTO THE COMPLETED EMBANKMENT AT A LATER TIME.

COMPACTION
THE MOVEMENT OF THE HAULING AND SPREADING EQUIPMENT OVER THE FILL SHALL BE CONTROLLED SO THAT THE ENTIRE SURFACE OF EACH LIFT SHALL BE TRAVERSED BY NOT LESS THAN ONE TREAD TRACK OF THE EQUIPMENT OR COMPACTION SHALL BE ACHIEVED BY A MIN. OF FOUR COMPLETE PASSES OF A SHEEPSFOOT, RUBBER TIRED OR VIBRATORY ROLLER. FILL MATERIAL SHALL CONTAIN SUFFICIENT MOISTURE SUCH THAT THE REQUIRED DEGREE OF COMPACTION WILL BE OBTAINED WITH THE EQUIPMENT USED. THE FILL MATERIAL SHALL CONTAIN SUFFICIENT MOISTURE SO THAT IF FORMED INTO A BALL IT WILL NOT CRUMBLE, YET NOT SO WET THAT WATER CAN BE SQUEEZED OUT.

THE DENSITY OF EACH LIFT SHALL NOT BE LESS THAN 95% OF MAX. DRY DENSITY WITH A MOISTURE CONTENT WITHIN ±2% OF THE OPTIMUM. EACH LAYER OF FILL SHALL BE COMPACTED AS NECESSARY TO OBTAIN THAT DENSITY, AND IS TO BE CERTIFIED BY THE ENGINEER AT THE TIME OF CONSTRUCTION. ALL COMPACTION IS TO BE DETERMINED BY AASHTO METHOD T–99 (STANDARD PROCTOR).

McCORMICK TAYLOR
509 South Exeter Street
4th Floor
Baltimore, Maryland 21202
(410) 662-7400

EROSION AND SEDIMENT CONTROL PLAN NOTES

FRANKLIN KNOLLS-PHASE 3

SLIGO (13th) ELECTION DISTRICT
PARCEL X, SUBDIVISION X, LIBER X FOLIO X
MONTGOMERY COUNTY, MARYLAND

CLIENT: MONTGOMERY COUNTY DEPT OF ENVIRONMENTAL PROTECTION
255 ROCKVILLE PIKE, RM. 120
ROCKVILLE, MD 20850-4166
MR. PAUL BOGLE, P.E.
(240) 777-7757

DESIGN	KCS
DRAFT	WJW
APPROVED	HJD
DATE	JUNE 2015
SCALE	

SHEET 40 OF 43

FILE: I:\5152\13 - Roadway \JD - Forest Estates and the Four Corners Area\Design\Engineering\PlanSet\FK P3\pES-N001_FK3.dgn
PLOTTED: Tuesday, June 02, 2015 AT 10:35 AM

DEPARTMENT OF PERMITTING SERVICES

Isiah Leggett
County Executive

Diane R Schwartz Jones
Director

SEDIMENT CONTROL PERMIT

Issue Date: 01/25/2010

Permit No: 236507
Expires: 01/25/2016
Ref. No:
ID: AC1087238

THIS IS TO CERTIFY THAT: MONTGOMERY COUNTY DEPT OF ENVIRONMENTAL PROTECTION
255 ROCKVILLE PIKE
SUITE 120
ROCKVILLE, MD 20850

HAS PERMISSION TO: DISTURB 0

PURPOSE: CONSTRUCTION

PERMIT CONDITIONS: BLANKET PERMIT FOR DEP ROADSIDE LID RETROFITS - ALL PROJECT SITE WILL INVOLVE LESS THAN 5,000 SQ FEET OF LOD -

PREMISE ADDRESS: VARIOUS LOCATIONS LID RETROFITS

The permittee must contact JOHN THRASHER Field Inspector at (301)370-3633 or john.thrasher@montgomerycountymd.gov to obtain an inspection prior to:
1. Commencing land-disturbing activity;
2. Installing sediment-control basins or stormwater-management structures;
3. Removing sediment-control devices; and

LOT - BLOCK: - ZONE: ELECTION DISTRICT:
BOND NO.: BOND TYPE: PS NUMBER:
PERMIT FEE: $ 1,596.00 SUBDIVISION: FY2010 - GENL PERMIT ROW LID

Director, Department of Permitting Services

255 Rockville Pike, 2nd Floor · Rockville, MD 20850 · (240)777-0311 · (240)777-6256 TTY
www.montgomerycountymd.gov/permittingservices

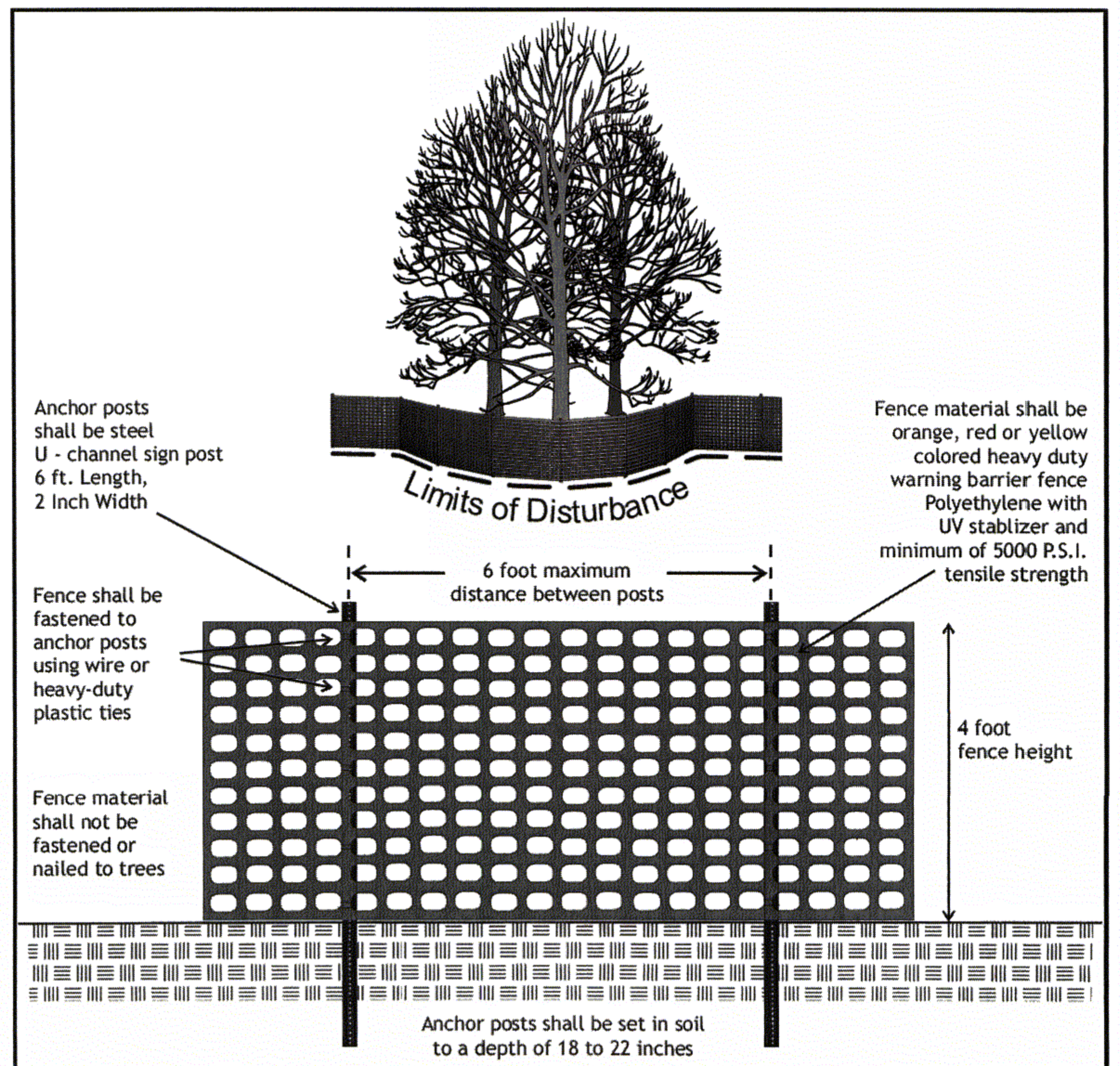

Unless trees are already protected by means of sediment and erosion control devices such as super silt fence, tree protection fencing shall be installed along the approved limits of disturbance before any clearing, grading or construction activities begin; and, shall be maintained throughout all active phases of construction. If for any reason DPS determines that polyethylene barrier fence is not providing effective protection, other forms of tree protection such as 14-gauge welded wire or chain link fencing may be required as a replacement

MONTGOMERY COUNTY DEPARTMENT OF PERMITTING SERVICES	TREE PROTECTION FENCING DETAIL	DATE: 6 /14
		SCALE: NONE

DETAIL 23C-CURB INLET PROTECTION (COG OR COS INLETS)

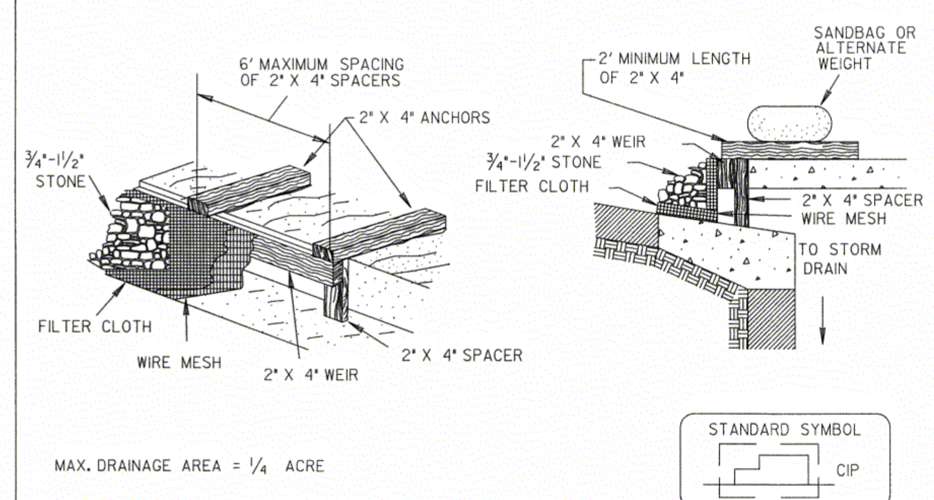

MAX. DRAINAGE AREA = ¼ ACRE

1. Attach a continuous piece of wire mesh (30" minimum width by throat length plus 4') to the 2" x 4" weir (measuring throat length plus 2') as shown on the standard drawing.

2. Place a continuous piece of Geotextile Class E the same dimensions as the wire mesh over the wire mesh and securely attach it to the 2" x 4" weir.

3. Securely nail the 2" X 4" weir to a 9" long vertical spacer to be located between the weir and the inlet face (max. 4' apart).

4. Place the assembly against the inlet throat and nail (minimum 2' lengths of 2" x 4" to the top of the weir at spacer locations). These 2" x 4" anchors shall extend across the inlet top and be held in place by sandbags or alternate weight.

5. The assembly shall be placed so that the end spacers are a minimum 1' beyond both ends of the throat opening.

6. Form the ½" x ½" wire mesh and the geotextile fabric to the concrete gutter and against the face of the curb on both sides of the inlet. Place clean ¾" x 1½" stone over the wire mesh and geotextile in such a manner to prevent water from entering the inlet under or around the geotextile.

7. This type of protection must be inspected frequently and the filter cloth and stone replaced when clogged with sediment.

8. Assure that storm flow does not bypass the inlet by installing a temporary earth or asphalt dike to direct the flow to the inlet.

U.S. DEPARTMENT OF AGRICULTURE SOIL CONSERVATION SERVICE	PAGE E - 16 - 5B	MARYLAND DEPARTMENT OF ENVIRONMENT WATER MANAGEMENT ADMINISTRATION

MARYLAND LICENSED TREE EXPERT WHO WILL BE RESPONSIBLE FOR IMPLEMENTING THE TREE PROTECTION PLAN:
KYLE ADAMSON (LIC. * 00111)
CUSTOM TOUCH TREE SERVICES, INC.
3140 LIBERTY ROAD
NEW WINDSOR, MD 21776
(301) 963-2384

TREE TYPE & SIZE	PLAN SHEET	REMOVAL FEE
6" MIMOSA	25	$500
15" MAPLE	39	$500 + $250
TOTAL REMOVAL FEES:	$1,000	$1,250

DETAIL 22 - SILT FENCE

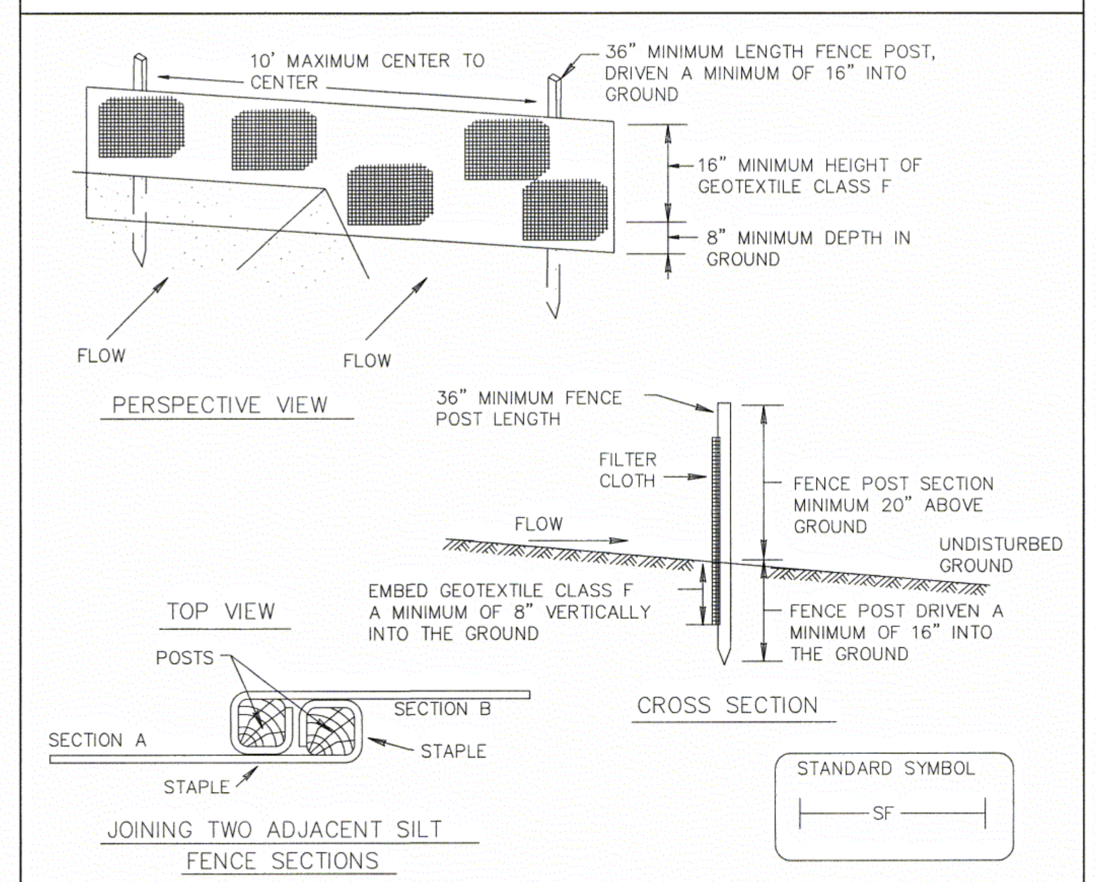

Construction Specifications

1. Fence posts shall be a minimum of 36" long driven 16" minimum into the ground. Wood posts shall be 11/2" x 11/2" square (minimum) cut, or 13/4" diameter (minimum) round and shall be of sound quality hardwood. Steel posts will be standard T or U section weighting not less than 1.00 pond per linear foot.

2. Geotextile shall be fastened securely to each fence post with wire ties or staples at top and mid-section and shall meet the following requirements for Geotextile Class F:

Tensile Strength	50 lbs/in (min.)	Test: MSMT 509
Tensile Modulus	20 lbs/in (min.)	Test: MSMT 509
Flow Rate	0.3 gal ft / minute (max.)	Test: MSMT 322
Filtering Efficiency	75% (min.)	Test: MSMT 322

3. Where ends of geotextile fabric come together, they shall be overlapped, folded and stapled to prevent sediment bypass.

4. Silt Fence shall be inspected after each rainfall event and maintained when bulges occur or when sediment accumulation reached 50% of the fabric height.

Silt Fence Design Criteria

Slope Steepness	(Maximum) Slope Length	(Maximum) Silt Fence Length
Flatter than 50:1	unlimited	unlimited
50:1 to 10:1	125 feet	1,000 feet
10:1 to 5:1	100 feet	750 feet
5:1 to 3:1	60 feet	500 feet
3:1 to 2:1	40 feet	250 feet
2:1 and steeper	20 feet	125 feet

Note: In areas of less than 2% slope and sandy soils (USDA general classification system, soil Class A) maximum slope length and silt fence length will be unlimited. In these areas a silt fence may be the only perimeter control required.

U.S. DEPARTMENT OF AGRICULTURE SOIL CONSERVATION SERVICE	PAGE E - 15 - 3 & 3A	MARYLAND DEPARTMENT OF ENVIRONMENT WATER MANAGEMENT ADMINISTRATION

DETAIL 23A - STANDARD INLET PROTECTION

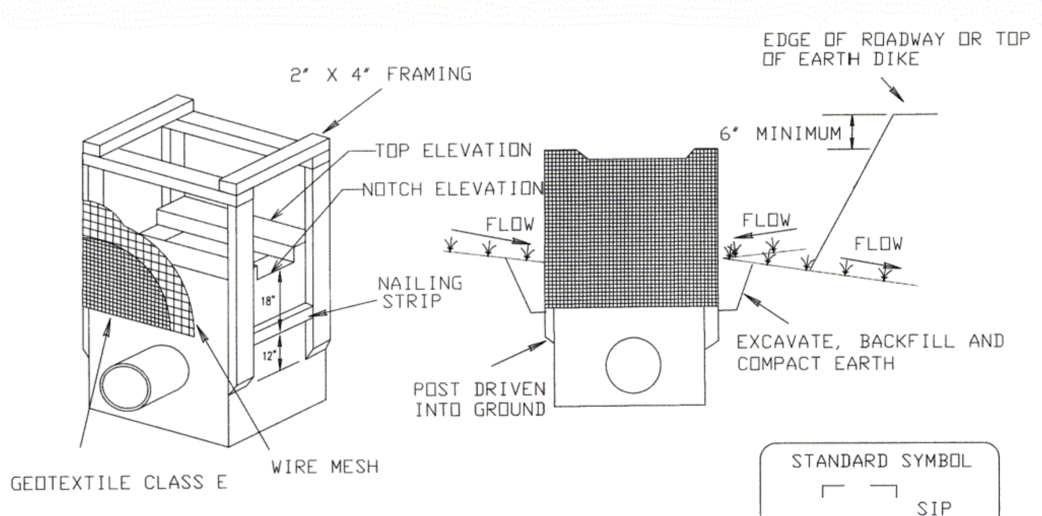

MAX. DRAINAGE AREA = 1/4 ACRE

Construction Specifications

1. Excavate completely around the inlet to a depth of 18" below the notch elevation.

2. Drive the 2" x 4" construction grade lumber posts 1' into the ground at each corner of the inlet. Place nail strips between the posts on the ends of the inlet. Assemble the top portion of the 2" x 4" frame using the overlap joint shown on Detail 23A. The top of the frame (weir) must be 6" below adjacent roadways where flooding and safety issues may arise.

3. Stretch the 1/2" x 1/2" wire mesh tightly around the frame and fasten securely. The ends must meet and overlap at a post.

4. Stretch the Geotextile Class E tightly over the wire mesh with the geotixtile extending from the top of the frame to 18" below the inlet notch elevation. Fasten the geotextile firmly to the frame. The ends of the geotextile must meet at a post, be overlapped and folded, then fastened down.

5. Backfill around the inlet in compacted 6" layers until the layer of earth is level with the notch elevation on the ends and top elevation on the sides.

6. If the inlet is not in a sump, construct a compacted earth dike across the ditch line directly below it. The top of the earth dike should be at least 6" higher than the top of the frame.

7. The structure must be inspected periodically and after each rain and the geotextile replaced when it becomes clogged.

U.S. DEPARTMENT OF AGRICULTURE SOIL CONSERVATION SERVICE	PAGE E - 16 - 5	MARYLAND DEPARTMENT OF ENVIRONMENT WATER MANAGEMENT ADMINISTRATION

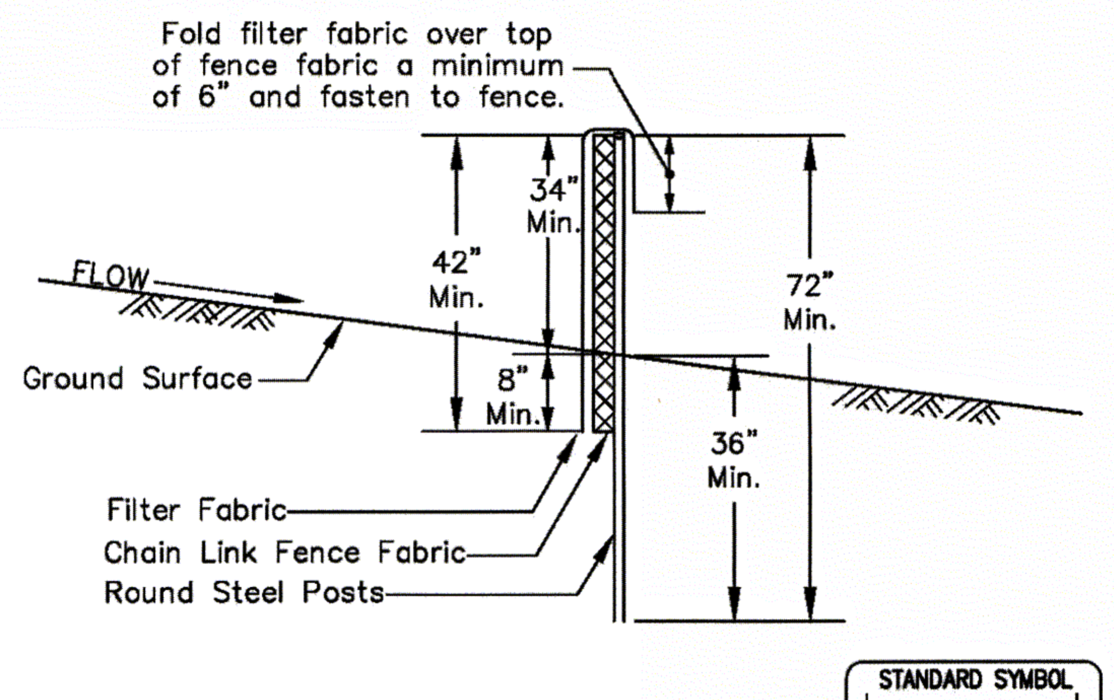

NOTES

1. Steel Posts must be Schedule 40 or 'SS-40', 2.5" diameter, galvanived pipe. Post Spacing must not exceed 10 linear feet. Posts do not need to be set in concrete.
2. Chain link fence fabric must be 2" x #9 gauge x 42" KK wire. Chainlink fence fabric must be stretched taut and securely fastened to posts with fence wire.
3. Filter fabric must be MSHA Class 'F' fabric. Filter fabric must be streched taut and securely fastened to chain link fence, front and back. Where two ends of filter cloth meet, they must be overlapped a minimum of 6", folded together and fastened.
4. Maintenance must be performed as needed and silt buildups removed when they reach an 18" depth above existing ground or when "bulges" develop in the silt fence.
5. All other details and specifications shall be in accordance with U.S.D.A.-S.C.S., M.D.E.-W.M.A. and M.S.H.A. specifications.

MONTGOMERY COUNTY DEPARTMENT OF PERMITTING SERVICES WATER RESOURCES	MODIFIED SUPER SILT FENCE	DATE: 6/03
		SCALE: NONE

Backfill the root-pruning trench with excavated soil and mulch the trench line with 2 to 4 inches of shredded wood mulch. Trench may not remain open longer than 24 hours without watering. Except where erosion and sediment control devices are already provided, tree protection fence shall be installed along the Limits of Disturbance (LOD) where this intersects a tree protection zone

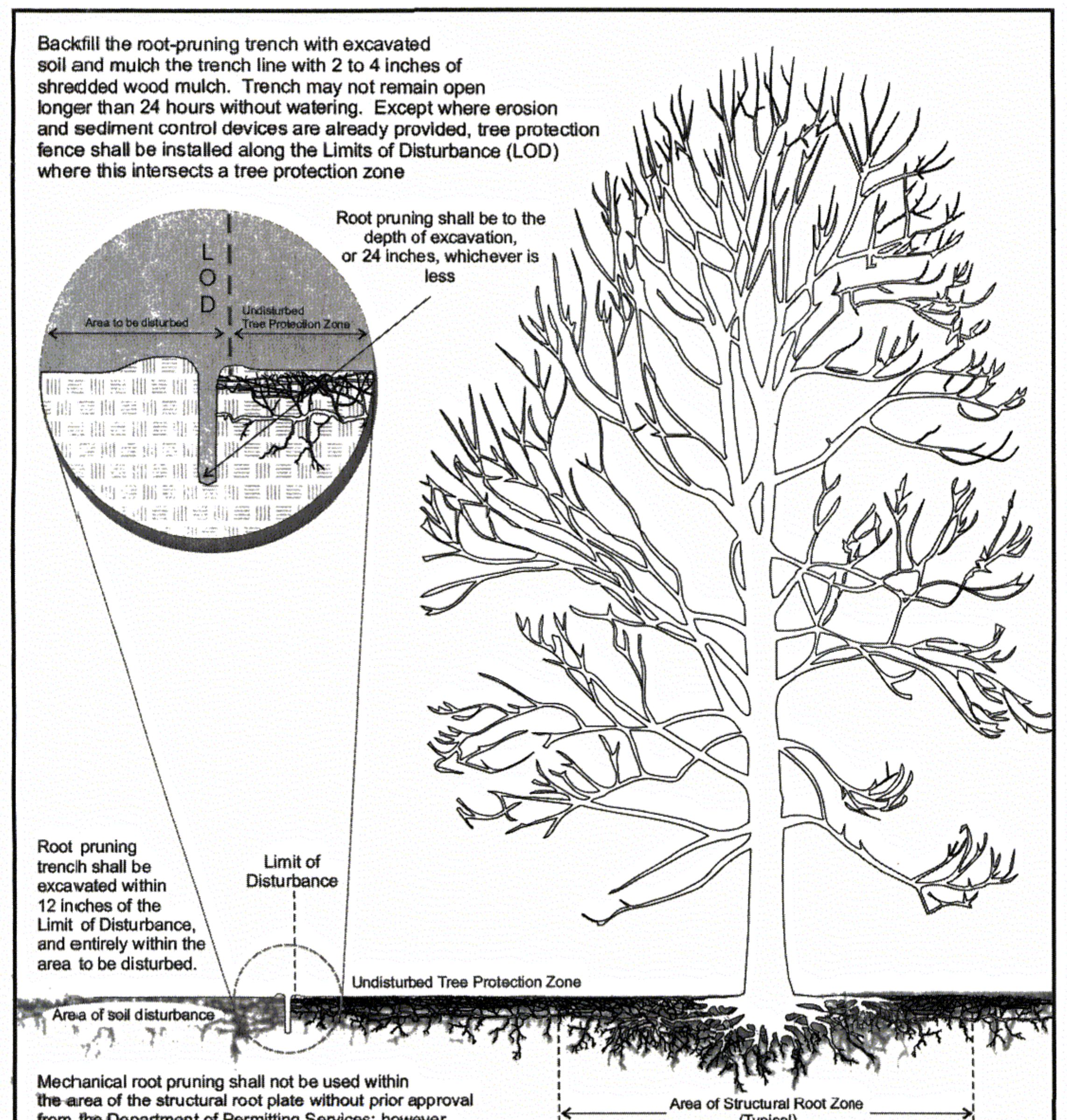

Mechanical root pruning shall not be used within the area of the structural root plate without prior approval from the Department of Permitting Services; however, supersonic air or hydroexcavation tools may be used in these areas if the use of these devices is supervised by a Maryland Licensed Tree Expert

Structural Root Plate Formula:
0.45 X Diameter of tree in inches
= Radius of Structural Root Plate in feet

MONTGOMERY COUNTY DEPARTMENT OF PERMITTING SERVICES	ROOT PRUNING AND STRUCTURAL ROOT PLATE FORMULA DETAIL	DATE: 6 /14
		SCALE: NONE

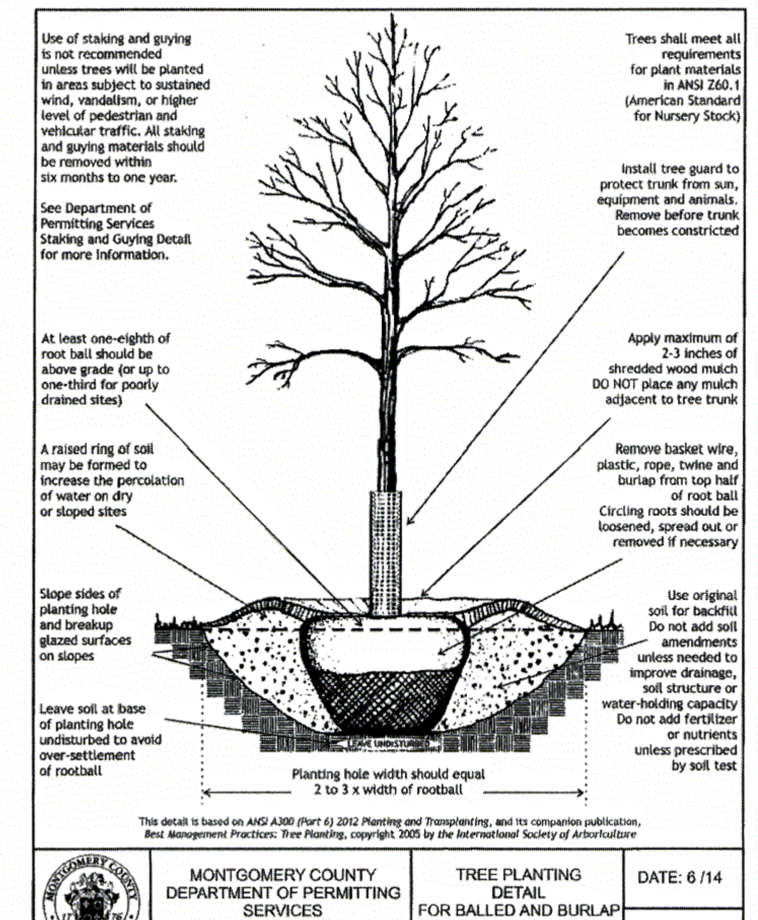

This detail is based on *ANSI A300 (Part 6) 2012 Planting and Transplanting*, and its companion publication, *Best Management Practices: Tree Planting*, copyright 2005 by the *International Society of Arboriculture*

MONTGOMERY COUNTY DEPARTMENT OF PERMITTING SERVICES	TREE PLANTING DETAIL FOR BALLED AND BURLAP NURSERY STOCK	DATE: 6 /14
		SCALE: NONE

STATE OF MARYLAND · KIMI C. SCHMIDT · No. 31204 · PROFESSIONAL ENGINEER

PROFESSIONAL CERTIFICATION.
I HEREBY CERTIFY THAT THESE DOCUMENTS WERE PREPARED OR APPROVED BY ME, AND THAT I AM A DULY LICENSED PROFESSIONAL ENGINEER UNDER THE LAWS OF THE STATE OF MARYLAND, LICENSE NO. 31204 , EXPIRATION DATE: 1 / 13 / 2017.

McCORMICK TAYLOR
509 South Exeter Street
4th Floor
Baltimore, Maryland 21202
(410) 662-7400

EROSION AND SEDIMENT CONTROL NOTES
FRANKLIN KNOLLS-PHASE 3
SLIGO (13th) ELECTION DISTRICT
PARCEL X, SUBDIVISION X, LIBER X FOLIO X
MONTGOMERY COUNTY, MARYLAND

CLIENT: MONTGOMERY COUNTY DEPT OF ENVIRONMENTAL PROTECTION
255 ROCKVILLE PIKE, RM. 120
ROCKVILLE, MD 20850-4166
MR. PAUL BOGLE, P.E.
(240) 777-7757

DESIGN	KCS
DRAFT	WJW
APPROVED	HJD
DATE	JUNE 2015
SCALE	NOT TO SCALE

SHEET 41 OF 43

FILE: I:\5182\13 - Roadway LID – Forest Estates and the Four Corners Area\Design\Engineering\PlanSet\FK P3\pES-N002_FK3.dgn
PLOTTED: Tuesday, June 02, 2015 AT 10:35 AM

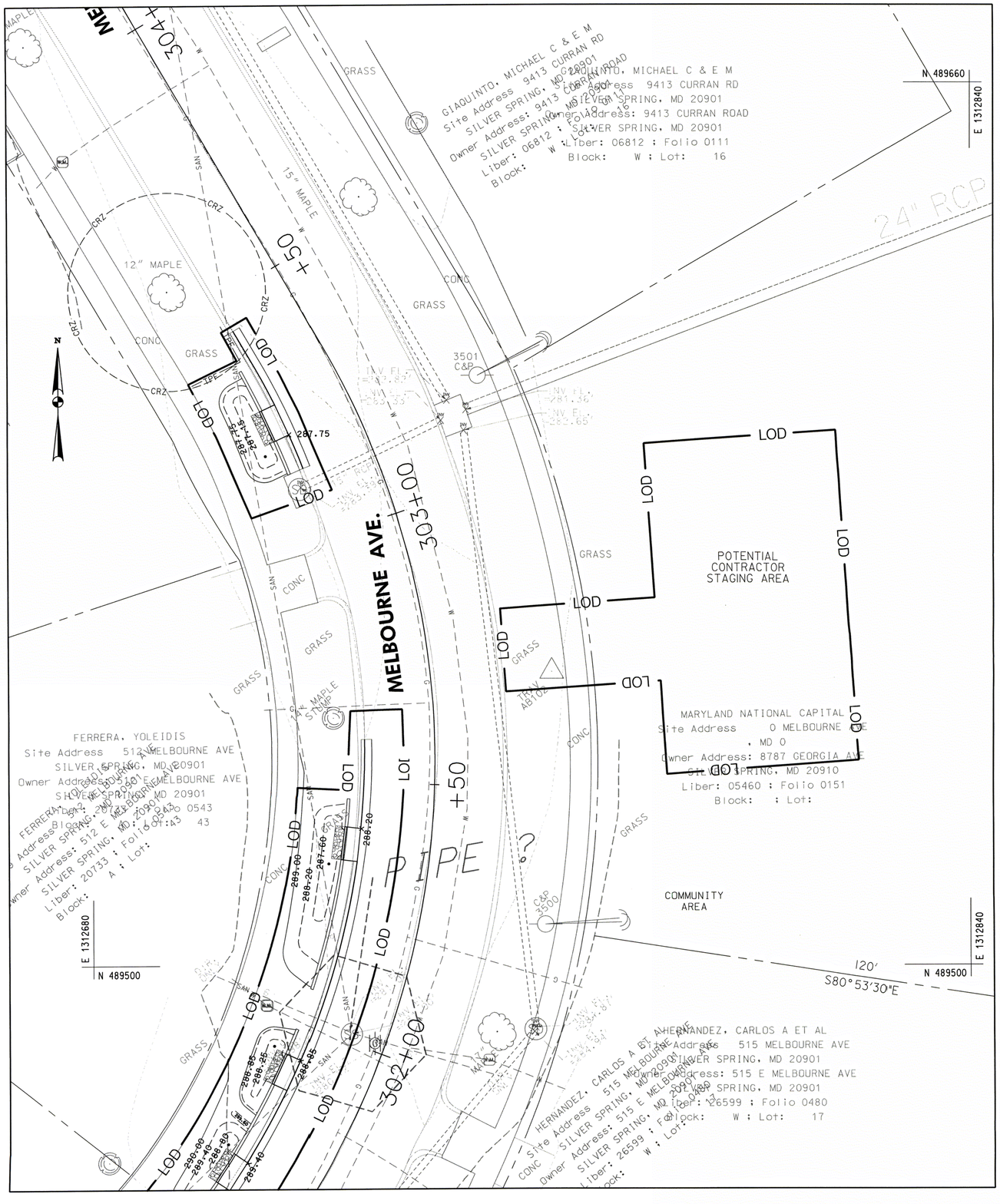

SEQUENCE OF CONSTRUCTION

1. PRIOR TO CLEARING OF TREES, INSTALLING SEDIMENT CONTROL MEASURES, OR GRADING, A PRECONSTRUCTION MEETING MUST BE CONDUCTED ON-SITE WITH THE MONTGOMERY COUNTY DEPARTMENT OF PERMITTING SERVICES (MCDPS) SEDIMENT CONTROL INSPECTOR (240) 777-6300 (48 HOURS NOTICE), THE MCDPS RIGHT OF WAY INSPECTOR (301) 370-3686 (48 HOURS NOTICE), THE OWNER'S REPRESENTATIVE, THE CONTRACTOR AND THE SITE ENGINEER.

2. THE CONTRACTOR SHALL COMPLY WITH MCDOT'S WORK ZONE TEMPORARY TRAFFIC CONTROL STANDARDS AND MSHA STANDARDS NO. 104.02-10 AND NO. 104.02-14.

3. THE LIMITS OF DISTURBANCE MUST BE FIELD MARKED PRIOR TO CLEARING OF TREES, INSTALLATION OF SEDIMENT CONTROL MEASURES, CONSTRUCTION, OR OTHER LAND DISTURBING ACTIVITIES.

4. CLEAR AND GRADE FOR INSTALLATION OF SEDIMENT CONTROL DEVICES, ONLY DISTURBING THE AREA NEEDED FOR INSTALLATION OF THE SEDIMENT CONTROL DEVICES.

5. INSTALL SEDIMENT CONTROL DEVICES INCLUDING INLET PROTECTION, SILT FENCE AND TREE PROTECTION FENCING. TREE PROTECTION AREAS ARE SHOWN ON THE PLAN AND PROFILE SHEETS, IF REQUIRED. IMMEDIATELY STABILIZE ANY DISTURBANCE CAUSED BY THIS.

6. ONCE THE SEDIMENT CONTROL DEVICES ARE INSTALLED, THE PERMITTEE MUST OBTAIN WRITTEN APPROVAL FROM THE MCDPS INSPECTOR BEFORE PROCEEDING WITH ANY ADDITIONAL CLEARING, GRUBBING OR GRADING.

7. DISTURBED AREAS WITHIN THE PROJECT LIMITS SHALL HAVE EITHER PERMANENT OR TEMPORARY STABILIZATION AT THE END OF EACH WORK DAY.

8. CONTRACTOR MAY COMPLETE WORK IN EACH LOD AREA CONCURRENTLY AS LONG AS THE LOD IS STAKED OUT AND ALL SEDIMENT CONTROLS ARE IN PLACE. THE CONTRACTOR SHALL NOT EXCEED A MAXIMUM OF 5,000 SF OF DISTURBANCE AT ANY ONE TIME PER MCDEP'S SMALL LAND DISTURBANCE PERMIT FOR ROADSIDE LID RETROFITS.

9. THE CONTRACTOR SHALL UTILIZE THE DESIGNATED STOCKPILE/STAGING AREA ALONG MELBOURNE AVENUE UPON APPROVAL FROM MARYLAND NATIONAL CAPITAL PARK AND PLANNING. ANY ADDITIONAL STOCKPILE/STAGING AREA REQUIRES APPROVAL BY THE MCDPS SEDIMENT INSPECTOR PRIOR TO USE.

10. STOCKPILE/STAGING AREAS ARE TO BE REMOVED AND RESTORED TO ORIGINIAL CONDITION UPON COMPLETION OF WORK. STOCKPILE/STAGING AREAS ARE NOT TO BE CONSIDERED PART OF THE LIMITS OF DISTURBANCE AND NOT COUNTED AGAINST THE MAXIMUM 5,000 SF DISTURBED AREA REQUIREMENT OF THE PERMIT.

11. CONSTRUCTION OF EACH BMP FACILITY WILL FOLLOW A BASIC SEQUENCE OUTLINED BELOW:

a. THE LOD SHALL BE FIELD MARKED PRIOR TO INSTALLATION OF ANY SEDIMENT CONTROL MEASURES OR ANY OTHER LAND DISTURBING ACTIVITIES.

b. INSTALL SILT FENCE (SF) OR SUPER SILT FENCE (SSF) FOR STEEP SLOPES, ALONG THE SIDEWALK AND DOWNSTREAM DRIVEWAY ENTRANCES. INLET PROTECTION (IP) SHALL BE INSTALLED AT THE CLOSEST DOWNSTREAM INLET.

c. OBTAIN WRITTEN APPROVAL FROM THE MCDPS SEDIMENT CONTROL INSPECTOR BEFORE PROCEEDING WITH CONSTRUCTION.

d. CONSTRUCT THE FACILITY PER THE PLANS AND DETAILS. CURB INLETS TO THE FACILITY SHALL BE BLOCKED WITH SAND BAGS UNTIL THE FACILITY IS STABILIZED AND IS READY TO BE BROUGHT ON LINE. STABILIZE ALL AREAS PRIOR TO PLACEMENT OF THE FILTER MEDIA.

e. THE CONTRACTOR SHALL TAKE EXTREME CAUTION TO NOT ALLOW DISTURBED AREAS TO DRAIN INTO THE FACILITY. ALL DISTURBED AREAS SHALL BE STABILIZED AT THE END OF EACH WORK DAY.

f. FINAL GRADE FACILITY AND PERMANENTLY STABILIZE ALL DISTURBED AREAS AS SHOWN ON THE LANDSCAPE PLANS AND/OR TYPICAL SECTIONS.

h. THE CONTRACTOR MUST OBTAIN WRITTEN APPROVAL FROM MCDPS SEDIMENT INSPECTOR, PRIOR TO THE REMOVAL OF ANY SEDIMENT CONTROL DEVICE, THAT THE AREA IS ADEQUATELY STABILIZED AND CAN BE REMOVED FROM THE TOTAL 5,000 SF DISTURBED AREA TABULATION.

i. ANY AREAS DISTURBED DURING THE REMOVAL OF E&S CONTROLS SHALL BE IMMEDIATELY STABILIZED.

STOCKPILE NOTES:
1. CONTRACTOR MUST CONTACT THE MNCP-PC FOR A PRECONSTRUCTION MEETING TO ESTABLISH THE EXACT LIMITS OF THE STAGING AND STOCKPILE AREA. CONTRACTOR MUST ADHERE TO ALL CONDITIONS OF THE APPROVED PARK PERMIT.
2. HOLD STAGING AREA AT LEAST 20' FROM ANY TREE.

McCORMICK TAYLOR
509 South Exeter Street
4th Floor
Baltimore, Maryland 21202
(410) 662-7400

EROSION AND SEDIMENT CONTROL PLAN

FRANKLIN KNOLLS-PHASE 3

SLIGO (13th) ELECTION DISTRICT
PARCEL X, SUBDIVISION X, LIBER X FOLIO X
MONTGOMERY COUNTY, MARYLAND

CLIENT: MONTGOMERY COUNTY DEPT OF ENVIRONMENTAL PROTECTION
255 ROCKVILLE PIKE, RM. 120
ROCKVILLE, MD 20850-4166
MR. PAUL BOGLE, P.E.
(240) 777-7757

DESIGN	KCS	APPROVED	HJD
DRAFT	WJW	DATE	JUNE 2015
		SCALE	

SHEET 42 OF 43

FILE: I:\516213 - Roadway LID - Forest Estates and the Four Corners Area\Design\Engineering\PlanSet\FK PS\pES-P001_FK3.dgn
PLOTTED: Tuesday, June 02, 2015 AT 10:35 AM

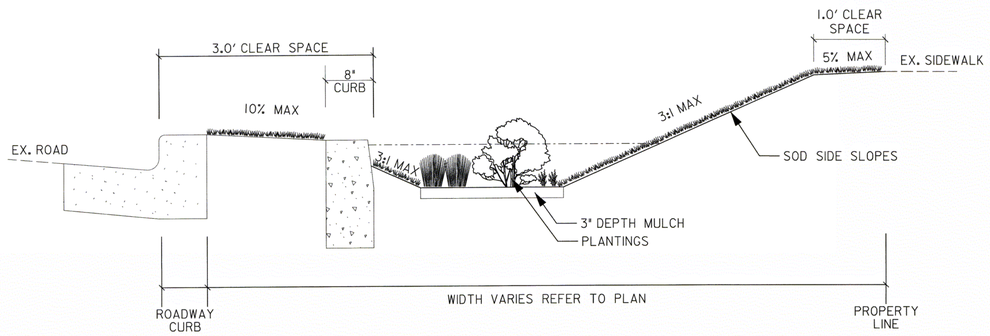

PLANTING TYPICAL SECTION

SCALE: 1"=1'

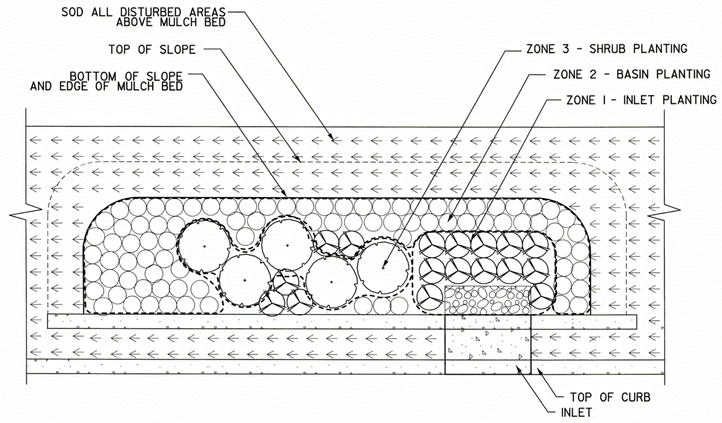

BMP PLANTING TYPICAL PLAN

NOT TO SCALE

LEGEND

- ZONE 1 - INLET PLANTINGS ORNAMENTAL GRASS - PLANT 18" ON CENTER
- ZONE 2 - BASIN PLANTINGS PERENNIAL - PLANT 18" ON CENTER
- ZONE 3 - SHRUB PLANTINGS SHRUB - PLANT 3' ON CENTER

CONCEPTUAL ZONE SCHEDULE

ZONE 1	15% BMP AREA
ZONE 2	60% BMP AREA
ZONE 3	25% BMP AREA

NOTES:

1. This plan is for landscape purposes only.
2. All proposed layouts are conceptual.
3. Cluster species in groupings.
4. When no Zone 3 plantings are specified, distribute Zone 2 plantings evenly over Zone 2 and Zone 3.
5. Landscape Architect shall approve plant placement on site.
6. Tree shall be 2-2.5" cal. and B&B

PLANT SCHEDULE

BMP		32	33	26A	72	78	80	81	82	83	87	88	90	91	96	97	98/98A	99	101	102	103/103A	104/104A	105	106	107/107C	107A/107B	108A/108B	109	110A/110B	111	112	112A	113	114	115	117	118	119	Total
Groundcovers	Turfgrass Sod (SY)	55	108	68	49	55	34	35	36	28	40	31	28	35	51	64	73	36	38	40	112	74	54	34	98	76	77	34	75	52	49	43	42	49	138	26	49	56	2042
	Shredded Hardwood Bark Mulch (SY)	-	-	8	3	14	2	3	4	1	2	2	3	6	5	6	7	4	3	2	23	11	2	3	12	13	8	2	9	11	5	2	2	5	15	4	9	4	215
Zone 1 Inlet Plantings (15% SF BMP)	Chasmanthium latifolium/ River Oats	-	-	-	3	-	-	-	-	3	-	3	-	-	-	3	-	-	-	-	-	-	-	-	-	-	6	3	-	-	-	-	-	-	3	-	-	24
	Carex stricta / Tussock Sedge	-	-	5	-	-	3	3	3	-	-	-	-	3	6	-	6	3	-	6	-	6	3	3	18	-	-	-	-	-	6	3	3	-	-	-	6	3	89
	Panicum virgatum 'Shenandoah'/ Shenandoah Switchgrass	-	-	-	-	8	-	-	-	-	3	-	3	-	-	-	-	-	6	-	13	-	-	-	-	10	-	-	6	7	-	-	-	3	12	-	-	-	71
Zone 2 Basin Plantings (60% SF BMP)	Aesclepias incarnata 'Soulmate' / Swamp Milkweed	-	-	10	-	16	-	5	4	-	4	-	6	9	9	6	14	7	-	-	17	14	5	-	14	12	13	-	10	14	9	3	-	8	15	-	14	-	238
	Aster novae-angliae/ 'English Countryside' Aster	-	-	-	-	-	-	-	4	-	-	-	-	-	-	-	-	-	-	-	17	-	-	-	-	10	-	-	-	-	-	-	-	-	10	-	-	-	41
	Echinacea purpurea/ Purple Coneflower	-	-	-	-	-	-	-	4	-	-	-	-	-	-	-	-	-	-	-	-	-	-	-	14	-	-	-	-	-	8	-	5	-	-	-	-	-	31
	Iris versicolor / Blue Flag Iris	-	-	10	5	17	3	5	-	-	-	3	-	9	5	6	7	4	8	8	17	12	-	8	-	10	10	4	10	13	8	-	-	8	14	7	14	5	230
	Osmundia cinnamomea / Cinnamon Fern	-	-	-	5	-	-	-	-	-	-	-	-	-	-	7	-	-	-	-	-	-	-	-	-	-	-	-	-	-	-	-	-	-	-	6	-	7	25
Zone 3 Shrub Plantings (25% SF BMP)	Clethra alnifolia 'Hummingbird' / Hummingbird Summersweet	-	-	-	-	4	-	-	-	-	-	-	-	-	-	-	-	-	-	-	7	-	-	-	-	-	-	3	4	-	-	-	-	-	-	-	-	18
	Cornus sericea 'Kelseyi' / Red Twig Dogwood	-	-	3	-	-	-	-	-	-	-	-	-	-	-	-	-	-	-	-	-	3	-	-	-	3	-	-	-	-	-	-	-	-	-	-	-	-	9
Replacement Tree	Amelanchier laevis / Allegheny Serviceberry	-	-	-	-	-	-	-	-	-	-	-	-	-	-	-	-	-	-	-	-	-	-	-	-	-	-	-	-	-	-	-	-	-	-	-	1	1
Tree Box Filter	Amelanchier grandiflora / Serviceberry (Single-Stemmed)	1	1	-	-	-	-	-	-	-	-	-	-	-	-	-	-	-	-	-	-	-	-	-	-	-	-	-	-	-	-	-	-	-	-	-	-	2
Tree Protection Fencing (LF)		-	-	-	-	12	-	-	-	28	-	29	-	-	-	12	-	-	30	23	-	16	-	28	-	20	-	-	-	25	-	20	-	-	-	16	-	-	259
Root Pruning Tree in Right of Way (LF)		-	-	-	-	12	-	-	-	28	-	29	-	-	-	-	-	-	-	21	-	-	-	28	13	20	-	-	-	25	-	20	-	-	-	16	-	-	212
Root Pruning Tree outside of Right of Way (LF)		-	85	-	21	-	-	-	-	-	-	-	-	-	-	52	-	-	41	24	-	16	-	-	-	-	-	-	-	-	-	-	-	-	-	-	-	-	239

McCORMICK TAYLOR
509 South Exeter Street
4th Floor
Baltimore, Maryland 21202
(410) 662-7400

LANDSCAPE PLAN

FRANKLIN KNOLLS-PHASE 3

SLIGO (13th) ELECTION DISTRICT

PARCEL X, SUBDIVISION X, LIBER X FOLIO X

MONTGOMERY COUNTY, MARYLAND

CLIENT: MONTGOMERY COUNTY DEPT OF ENVIRONMENTAL PROTECTION
255 ROCKVILLE PIKE, RM. 120
ROCKVILLE, MD 20850-4166
MR. PAUL BOGLE, P.E.
(240) 777-7757

DESIGN	KKM	APPROVED	HJD
DRAFT	WJW	DATE	JUNE 2015
		SCALE	1" = 10'

SHEET 43 OF 43

FILE: I:\5182\13 - Roadway LID – Forest Estates and the Four Corners Area\Design\Engineering\PlanSet\FK P3\pLCD-0001_FK3.dgn
PLOTTED: Tuesday, June 02, 2015 At 10:35 AM