MONTGOMERY COUNTY DEPARTMENT OF ENVIRONMENTAL PROTECTION

FRANKLIN KNOLLS PHASE 4

LOW IMPACT DEVELOPMENT PROJECT

CONTRACT NO. 8803000101-CD
Task Order 13 - Subtask B

INDEX OF SHEETS

MCPDWT (FULL SET)	MCDPS	
1		TITLE SHEET
2		OVERALL SITE PLAN
3–7		GEOMETRIC LAYOUT
8–11		STORMWATER MANAGEMENT DETAILS
12–49		PLAN AND PROFILE
50		EROSION & SEDIMENT NOTES
51		EROSION & SEDIMENT CONTROL PLAN
52		LANDSCAPE PLAN

MCDPS REVIEW IS FOR SEDIMENT CONTROL AND SAFE CONVEYANCE OF FLOW ONLY.

THE LOCATION OF THE UNDERGROUND AND SURFACE UTILITIES SHOWN ON THE PLANS ARE FOR INFORMATION AND GUIDANCE ONLY. NO GUARANTEE IS MADE AS TO THE ACCURACY OF SAID LOCATIONS. CONTRACTOR SHALL CONTACT "MISS UTILITY" AT 1-800-257-777, 48 HOURS PRIOR TO EXCAVATION FOR MARKING AND LOCATION OF UTILITIES.

CONVENTIONAL SYMBOLS
EXISTING CONSTRUCTION

100 YEAR FLOODPLAIN
RIGHT OF WAY LINE
PROPERTY LINE
CONCRETE CURB AND GUTTER
EDGE OF WOODED AREAS
TREE (FREE STANDING)
SIGN
FIRE HYDRANT
LIGHT POLE
UTILITY POLE
STORM DRAIN — 50
SANITARY — SS — 8" SAN — SAN
WATER — W — 24"W
GAS — G
ELECTRICAL HAND BOX - SIGNALS — H.B.
ELECTRIC (UNDERGROUND) — E

PROPOSED CONSTRUCTION

℄ CONSTRUCTION — 101 +50 102
CURB & GUTTER
TRAVERSE POINT
SIDEWALK
PAVEMENT REMOVAL
APPROXIMATE LIMITS OF CUT AND/OR FILL — C — F
LIMIT OF DISTURBANCE — LOD
STORM DRAIN PIPE
TEST PIT — TP-2
TEMPORARY CONSTRUCTION EASEMENT — TCE — TCE — TCE
PERPETUAL EASEMENT — PE — PE — PE

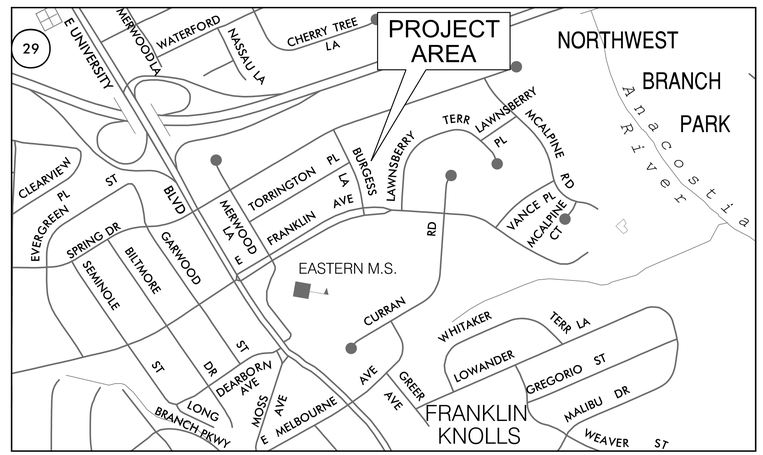

VICINITY MAP
SCALE : 1"= 500'

GENERAL NOTES

1. THE CONTRACTOR WILL IMMEDIATELY INFORM THE COUNTY OF ANY DISCREPANCIES FOUND BETWEEN THE PROJECT PLANS AND CONTRACT SPECIFICATIONS.
2. FOR CONSTRUCTION, ALL HORIZONTAL SHALL BE BASED ON NAD 83/91, NAVD 88 DATUM.
3. TYPES OF STORM DRAIN STRUCTURES REFER TO THE "DESIGN STANDARDS" OF MONTGOMERY COUNTY DEPARTMENT OF TRANSPORTATION, UNLESS OTHERWISE NOTED.
4. WHEN THE DROP ON THE MAIN LINE THROUGH A STORM DRAIN STRUCTURE CAN BE ACCOMMODATED BY AN INVERT SLOPE OF 1.5:1 OR FLATTER, A ROUNDED CHANNEL LINED WITH SEWER BRICK ON EDGE SHALL BE BUILT TO THE CROWN OF THE PIPES. WHEN THE INVERT SLOPES WOULD BE GREATER THAN 1.5:1 A SPECIAL INVERT SHALL BE CONSTRUCTED AS NOTED.
5. ALL STORM DRAIN PIPE SHALL BE INSTALLED WITH CLASS "C" BEDDING UNLESS OTHERWISE SPECIFIED.
6. THE CONTRACTOR SHALL MAKE FIELD ADJUSTMENTS TO STORM DRAIN STRUCTURES, WHEN NECESSARY, TO MEET EXISTING CONDITIONS, AS APPROVED BY MONTGOMERY COUNTY DEPARTMENT OF PERMITTING SERVICES RIGHT OF WAY INSPECTOR.
7. INFORMATION CONCERNING UNDERGROUND UTILITIES WAS OBTAINED FROM AVAILABLE RECORDS, BUT THE CONTRACTOR MUST DETERMINE THE EXACT LOCATIONS AND ELEVATIONS OF THE LINES BY DIGGING TEST PITS BY HAND AT ALL UTILITY CROSSINGS, WELL IN ADVANCE OF TRENCHING. IF CLEARANCES ARE LESS THAN SHOWN OR TWELVE (12) INCHES, WHICHEVER IS LESS, THE CONTRACTOR SHALL CONTACT THE COUNTY.
8. REPAIRS TO UTILITIES OR PROPERTY DAMAGE AS A RESULT OF THE CONTRACTOR'S NEGLIGENCE OR METHOD OF OPERATION MUST BE MADE AT THE CONTRACTOR'S EXPENSE BEFORE PROCEEDING WITH CONSTRUCTION.
9. CALL "MISS UTILITY" AT 1-800-257-7777 FORTY-EIGHT (48) HOURS PRIOR TO BEGINNING EXCAVATION TO DETERMINE THE EXACT LOCATION OF EXISTING UTILITIES.
10. CLEARING IS TO BE LIMITED TO THE "LIMIT OF DISTURBANCE" AS SHOWN ON THE PLANS.
11. ALL GRADING SHALL BE DONE IN SUCH A MANNER AS TO PROVIDE POSITIVE DRAINAGE.
12. DISTURBED AREAS ADJACENT TO ESTABLISHED LAWNS SHALL BE SODDED. OTHER DISTURBED AREAS SHALL BE SEEDED AND MULCHED.
13. THE CONTRACTOR SHALL UTILIZE THE MCDOT'S BLANKET ROADSIDE TREE PERMIT #2013-0557 FOR ANY MAINTENANCE, TREATMENT, PLANTING, REMOVAL, OR ROOT PRUNING ON TREES WITHIN THE PUBLIC RIGHT OF WAY. PERMIT REQUIREMENTS MAY BE OBTAINED FROM THE MCDOT ARBORIST AT (240) 777-7653.
14. CONTACT THE WASHINGTON SUBURBAN SANITARY COMMISSION SYSTEM MAINTENANCE ENGINEER BEFORE EXCAVATING BENEATH OR IN THE VICINITY OF EXISTING WATER OR SEWER LINES. BACKFILL TO BE DONE UNDER SUPERVISION OF W.S.S.C. CALL 301-699-4420.
    W.S.S.C. UTILITY CONTRACT NUMBERS WITHIN THE PROJECT LIMITS:
    55779 & 582829 (SANITARY) AND 55778 & 582828 (WATER).
15. CONTACT WASHINGTON GAS DISPATCH OFFICER AT (703)750-4831 BEFORE EXCAVATING BENEATH OR IN THE VICINITY OF EXISTING GAS MAIN AND SERVICE LATERALS.
16. CONTRACTOR SHALL COORDINATE WITH THE MONTGOMERY COUNTY DEPARTMENT OF PERMITTING SERVICES (DPS) RIGHT OF WAY INSPECTOR AND SEDIMENT CONTROL INSPECTOR PRIOR TO COMMENCING ANY LAND DISTURBING ACTIVITIES.
17. CONTRACTOR SHALL PROVIDE STANDARD TRAFFIC CONTROL IN ACCORDANCE WITH MCDOT FOR ALL CONSTRUCTION ACTIVITIES.
18. CONTRACTOR SHALL CONSTRUCT PROPOSED IMPROVEMENTS IN COMPLIANCE WITH CURRENT ADA GUIDELINES.

ENGINEER'S CERTIFICATION

I HEREBY CERTIFY THAT THESE DOCUMENTS WERE PREPARED OR APPROVED BY ME, AND THAT I AM A DULY LICENSED PROFESSIONAL ENGINEER UNDER THE LAWS OF THE STATE OF MARYLAND, LICENSE NO. 31204, EXPIRATION DATE: JAN. 13, 2015.

STATE OF MARYLAND — KIMI C. SCHMIDT — No. 31204 — PROFESSIONAL ENGINEER

DATE

KIMI C SCHMIDT, P.E.
P.E. # 31204

DESIGN CERTIFICATION

I HEREBY CERTIFY THAT THESE DOCUMENTS WERE PREPARED OR APPROVED BY ME IN ACCORDANCE WITH MONTGOMERY COUNTY DEPARTMENT OF TRANSPORTATION "STORM DRAIN DESIGN CRITERIA" AND THAT I AM A DULY LICENSED PROFESSIONAL ENGINEER UNDER THE LAWS OF THE STATE OF MARYLAND LICENSE NO. 31204, EXPIRATION DATE: JANUARY 13, 2015.

I FURTHER CERTIFY THAT THE TOTAL AMOUNTS OF EXCAVATION AND FILL AS SHOWN ON THESE PLANS HAVE BEEN COMPUTED TO BE 1,704 CUBIC YARDS OF EXCAVATION AND 5 CUBIC YARDS OF FILL AND THAT THE TOTAL AREA TO BE DISTURBED AS SHOWN ON THESE PLANS HAS BEEN DETERMINED TO BE A MAXIMUM OF 51,811 SQUARE FEET OR 1.19 ACRES.

STATE OF MARYLAND — KIMI C. SCHMIDT — No. 31204 — PROFESSIONAL ENGINEER

DATE

KIMI C SCHMIDT, P.E.
P.E. # 31204

BOARD OF EXAMINERS OF LANDSCAPE ARCHITECTS — 3565 — KATHARINE KYLE MUNDY — STATE OF MARYLAND

DATE

KATHARINE KYLE MUNDY, R.L.A.
R.L.A. # 3565

CONTRACTOR SHALL TAKE SPECIAL PRECAUTIONS TO PREVENT DAMAGE TO THE NEWLY INSTALLED PAVEMENT, CURB AND SIDEWALK BY MCDOT. CONTRACTOR IS RESPONSIBLE FOR THE DEMOLITION AND REMOVAL OF ALL DEMOLISHED ITEMS NECESSARY FOR THE CONSTRUCTION OF THEIR WORK. REPLACEMENT OF ANY DAMAGED ITEMS SHALL BE THE RESPONSIBILITY OF THE CONTRACTOR FOR NO ADDITIONAL COMPENSATION.

CONTRACTOR SHALL COORDINATE WITH THE COUNTY ARBORIST TO MINIMIZE IMPACTS TO EXISTING TREES AND TO DETERMINE THE LIMITS OF ROOT PRUNING OR TREE REMOVAL AS NECESSARY. ALL IMPACTED TREES SHALL BE DOCUMENTED FOR CURRENT HEALTH PRIOR TO CONSTRUCTION.

PROPOSED SECTIONS OF CURB AND GUTTER SHOWN ON THIS PLAN SET SHOULD BE CONSTRUCTED AT A CONSTANT SLOPE AND MATCH THE EXISTING CURB ELEVATIONS AT THE TIE-IN POINTS UNLESS OTHERWISE NOTED. STATION LIMITS ARE APPROXIMATE AND MAY BE MODIFIED DURING CONSTRUCTION.

OWNER/CONTACT/ADDRESS:
DEPARTMENT OF ENVIRONMENTAL PROTECTION
255 ROCKVILLE PIKE, STE 120
ROCKVILLE MD 20850-4166
(240) 777-7713 CRAIG CARSON

DPS PERMIT NO. XXXXXX

MONTGOMERY COUNTY, MARYLAND
DEPARTMENT OF PERMITTING SERVICES
FINAL APPROVAL
DATE _____
BY _____

*SUBJECT TO DEDICATION OF RIGHT OF WAY AND EASEMENTS PER COUNTY CODE SECTION 50.

McCormick Taylor
Engineers & Planners Since 1946
509 South Exeter Street
4th Floor
Baltimore, Maryland 21202
(410) 662-7400

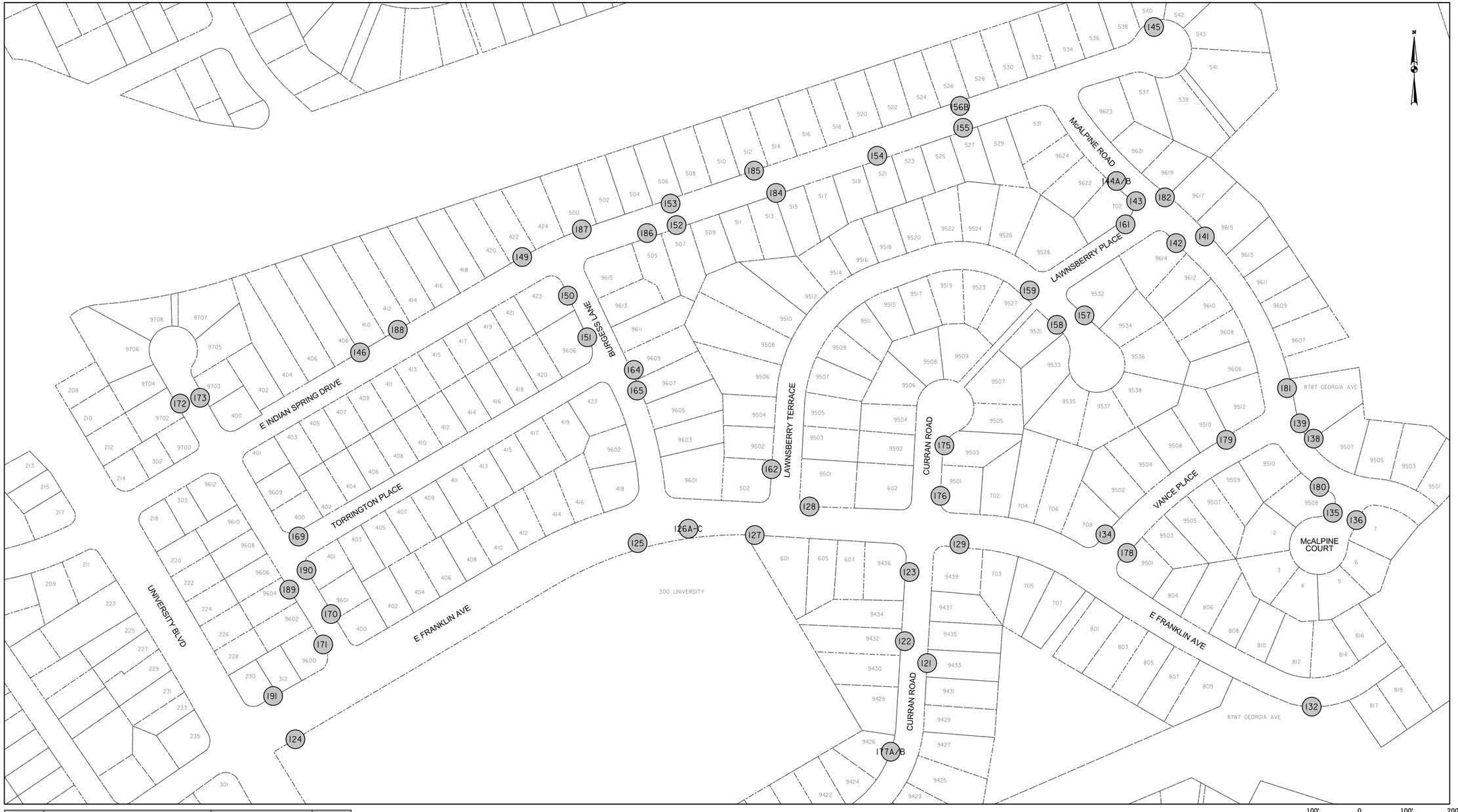

PROPOSED LID FACILITY LOCATIONS

SCALE : 1"= 100'

BMP ID	Approximate Address	BMP Practice Proposed	Plan Sheet
121	9433 Curran Rd	Rain Garden	12
122	9432 Curran Rd	Rain Garden	12
123	9436 Curran Rd	Bioretention	13
124	Across from 312 Franklin Ave	Rain Garden	14
125	Across from 416 E Franklin Ave	Rain Garden	15
126A-C	Across from 9601 Burgess Lane	Bioretention	15/16
127	601 Franklin Ave	Bioretention	16
128	9501 Lawnsberry Ter (along Franklin Ave)	Rain Garden	17
129	9439 Curran Road (along Franklin Ave)	Rain Garden	18
132	Across from 812 and 814 Franklin Ave	Rain Garden & Curb Replacement	19
134	4502 Vance Pl	Rain Garden	20
135	9508 McAlpine Rd (along McAlpine Ct)	Rain Garden	21
136	7 McAlpine Ct	Rain Garden	21
138	Across from 9510 McAlpine Rd; End of Vance Pl, on McAlpine Rd easement	Tree Box Filter	22
139	End of Vance Pl, on McAlpine Rd Easement	Bioretention	22
141	9613 McAlpine Rd	Bioretention	23
142	703 Lawnsberry Pl (along McAlpine Rd)	Bioretention	23
143	702 Lawnsberry Pl (along McAlpine Rd)	Rain Garden	24
144A/B	702 Lawnsberry Pl (along McAlpine Rd) to 9622 McAlpine Rd	Rain Garden	24
145	540 Indian Springs Dr	Rain Garden	25
146	408 and 410 Indian Springs Dr	Rain Garden	26
149	422 Indian Springs Dr	Rain Garden	27
150	423 Indian Springs Dr (along Burgess Ln)	Rain Garden	28
151	9606 Burgess Ln	Bioretention	29
152	507 Indian Springs Dr	Rain Garden	30
153	506 Indian Springs Dr	Rain Garden	30
154	521 Indian Springs Dr	Rain Garden	31
155	527 Indian Springs Dr	Rain Garden	32
156	526 Indian Springs Dr	Rain Garden	32
157	9532 Lawnsberry Ter	Rain Garden	33
158	9533 Lawnsberry Ter	Rain Garden	33
159	9527 Lawnsberry Ter	Bioretention	34
161	702 Lawnsberry Pl (along Lawnsberry Pl) & 9614 MacAlpine (along Lawnsberry Pl)	Rain Garden & Curb Replacement	35
162	502 Franklin Ave (along Lawnsberry Ter)	Rain Garden	36
164	9609 Burgess Ln	Rain Garden	29
165	9607 Burgess Ln	Rain Garden	37
169	400 Torrington Pl	Rain Garden	38
170	9603 Merwood Ln	Rain Garden	39
171	9600 Merwood Ln	Rain Garden	39
172	9702 Merwood Ln	Rain Garden	40
173	9703 Merwood Ln	Rain Garden	40
175	9503 Curran Road	Rain Garden	41
176	9501 Curran Road	Rain Garden	41
177A/B	9426 Curran Rd	Bioretention	42
178	9501 Vance Pl	Rain Garden	20
179	9510 Vance Pl	Rain Garden	43
180	9508 McAlpine Rd	Rain Garden	44
181	End of Vance Pl, on McAlpine Rd Easement	Rain Garden	22
182	9619 McAlpine Rd	Rain Garden	45
184	513 and 515 Indian Spring Dr	Rain Garden	46
185	512 Indian Spring Dr	Rain Garden	46
186	505 Indian Spring Drive	Rain Garden	47
187	500 Indian Spring Drive	Rain Garden	47
188	412 Indian Spring Dr	Rain Garden	26
189	9602 and 9604 Merwood Ln	Rain Garden	48
190	9603 Merwood Ln and 401 Torrington Pl	Rain Garden	48
191	230 University Blvd (on E Franklin Ave)	Rain Garden	49

McCormick Taylor
Engineers & Planners Since 1946
509 South Exeter Street
4th Floor
Baltimore, Maryland 21202
(410) 662-7400

OVERALL SITE PLAN
FRANKLIN KNOLLS-PHASE 4
SUGO (13th) ELECTION DISTRICT
PARCEL X, SUBDIVISION X, LIBER X FOLIO X
MONTGOMERY COUNTY, MARYLAND

CLIENT: MONTGOMERY COUNTY DEPT OF ENVIRONMENTAL PROTECTION
255 ROCKVILLE PIKE, RM. 120
ROCKVILLE, MD 20850-4166
MR. PAUL BOGLE, P.E.
(240) 777-7757

DESIGN	
DRAFT	WJW
APPROVED	HJD
DATE	JUNE 2014
SCALE	

SHEET 2 OF 52

FILE: I:\516213 - Roadway LID - Forest Estates and the Four Corners Area\Design\Engineering\PlanSet\FK P4\p0N-L001_FK4.dgn
PLOTTED: Thursday, June 05, 2014 AT 02:46 PM

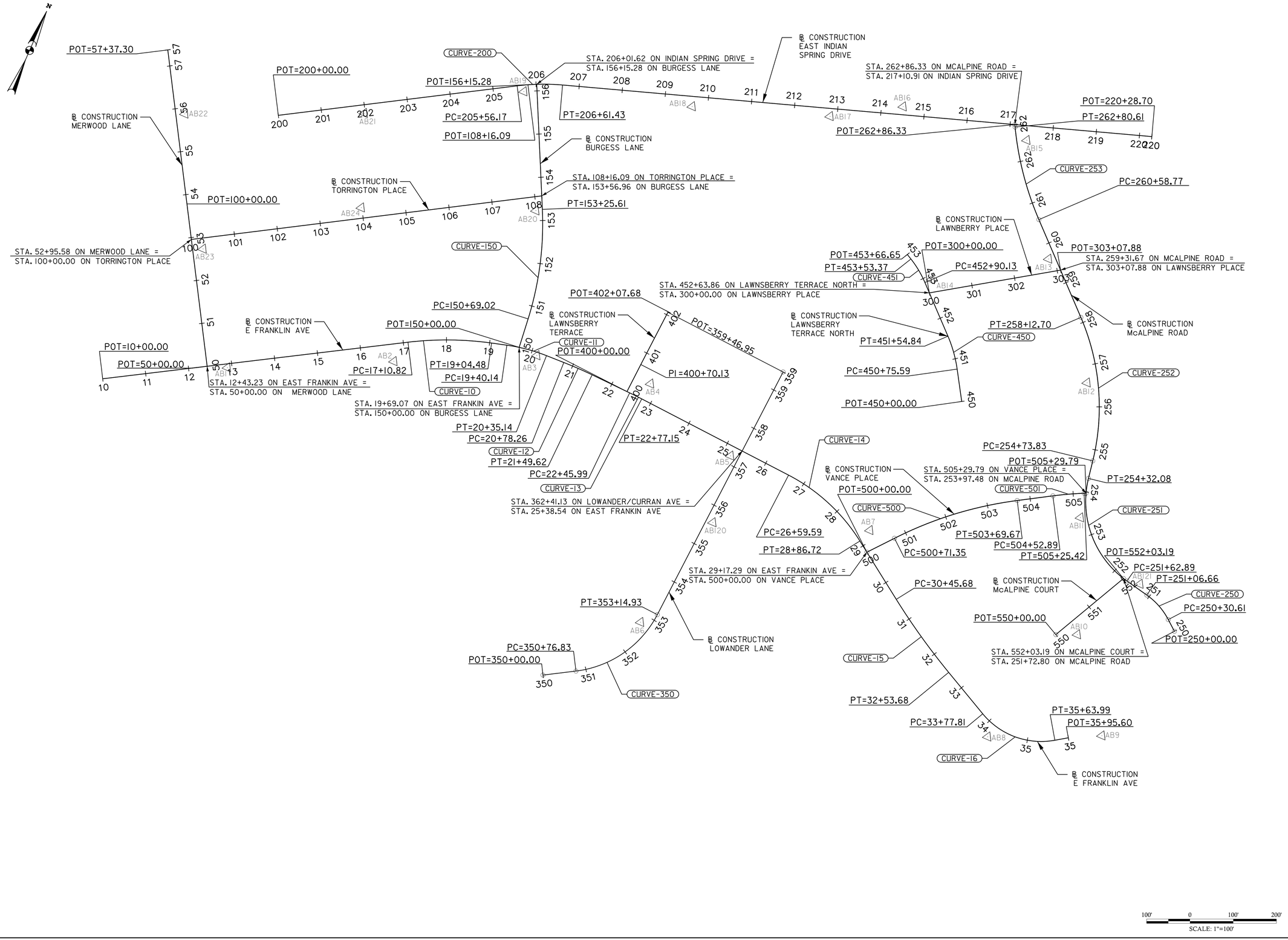

McCormick Taylor
Engineers & Planners Since 1946
509 South Exeter Street
4th Floor
Baltimore, Maryland 21202
(410) 662-7400

GEOMETRIC LAYOUT

FRANKLIN KNOLLS-PHASE 4

SLIGO (13th) ELECTION DISTRICT

PARCEL X, SUBDIVISION X, LIBER X FOLIO X

MONTGOMERY COUNTY, MARYLAND

CLIENT: MONTGOMERY COUNTY DEPT OF ENVIRONMENTAL PROTECTION
255 ROCKVILLE PIKE, RM. 120
ROCKVILLE, MD 20850-4166
MR. PAUL BOGLE, P.E.
(240) 777-7757

DESIGN	KCS
DRAFT	WJW
APPROVED	HJD
DATE	JUNE 2014
SCALE	1"=100'

SHEET 3 OF 52

FILE: I:\51823 - Roadway LID - Forest Estates and the Four Corners Area\Design\Engineering\PlanSet\FK P4\pGS-P001_P4.dgn
PLOTTED: Thursday, June 05, 2014 AT 02:46 PM

BASELINE CONTROL COORDINATES

℄ CONSTRUCTION	POINT NO.	NORTHING	EASTING	STATION	BEARING AHEAD	RADIUS
EAST FRANKLIN AVENUE	POB =	490038.0686	1311608.1675	10+00.00	N 59°37'18.65" E	
	PC =	490397.5329	1312221.3951	17+10.82	N 59°37'18.65" E	
	PI	490446.7738	1312305.3976	18+08.19	N 74°24'58.53" E	
	CC =	489750.5030	1312600.6737			750.00'
	PT=	490472.9321	1312399.1889	19+04.48	N 74°24'58.53" E	
	PC =	490482.5116	1312433.5365	19+40.14	N 74°24'58.53" E	
	PI	490495.3337	1312479.5103	19+87.86	N 88°01'30.22" E	
	CC =	490097.2161	1312540.9951			400.00'
	PT=	490496.9785	1312527.2102	20+35.14	N 88°01'30.22" E	
	PC =	490498.4643	1312570.2995	20+78.26	N 88°01'30.22" E	
	PI	490499.6945	1312605.9732	21+13.95	S 87°53'10.82" E	
	CC =	489499.0583	1312604.7618			1000.00'
	PT=	490498.3780	1312641.6438	21+49.62	S 87°53'10.82" E	
	PC =	490494.8234	1312737.9558	22+45.99	S 87°53'10.82" E	
	PI	490494.2487	1312753.5255	22+61.57	S 86°06'04.01" E	
	CC =	489495.5037	1312701.0738			1000.00'
	PT=	490493.1894	1312769.0697	22+77.15	S 86°06'04.01" E	
	PC =	490467.1854	1313150.6184	26+59.59	S 86°06'04.01" E	
	PI	490459.2740	1313266.7011	27+75.94	S 55°28'47.20" E	
	CC =	490043.1690	1313121.7202			425.00'
	PT=	490393.3377	1313362.5665	28+86.72	S 55°28'47.20" E	
	PC =	490303.2556	1313493.5377	30+45.68	S 55°28'47.20" E	
	PI	490244.2369	1313579.3455	31+49.83	S 62°55'41.19" E	
	CC =	491621.5375	1314400.2530			1600.00'
	PT=	490196.8396	1313672.0800	32+53.68	S 62°55'41.19" E	
	PC =	490140.3489	1313782.6063	33+77.81	S 62°55'41.19" E	
	PI	490093.4757	1313874.3155	34+80.80	N 56°06'55.06" E	
	CC =	490296.1752	1313862.2502			175.00'
	PT=	490150.8970	1313959.8168	35+63.99	N 56°06'55.06" E	
	POE =	490168.5236	1313986.0631	35+95.60		
MERWOOD LANE	POB =	490161.0709	1311818.0030	50+00.00	N 30°37'45.28" W	
	POE =	490795.5066	1311442.3615	57+37.30		
TORRINGTON PLACE	POB =	490415.4092	1311667.4124	100+00.00	N 59°21'46.35" E	
	POE =	490831.2875	1312369.5854	108+16.09		
℄ CONSTRUCTION	POINT NO.	NORTHING	EASTING	STATION	BEARING AHEAD	RADIUS
BURGESS LANE	POB =	490489.2712	1312461.6679	150+00.00	N 6°07'32.78" W	
	PC =	490557.8948	1312454.3029	150+69.02	N 6°07'32.78" W	
	PI	490686.7704	1312440.4715	151+98.63	N 26°07'41.17" W	
	CC =	490479.4619	1311723.4998			735.00'
	PT=	490803.1409	1312383.3913	153+25.61	N 26°07'41.17" W	
	POE =	491063.2129	1312255.8252	156+15.28		
INDIAN SPRING DRIVE	POB =	490758.7615	1311736.9934	200+00.00	N 59°23'55.86" E	
	PC =	491041.8822	1312215.7024	205+56.17	N 59°23'55.86" E	
	PI	491068.7748	1312261.1732	206+08.99	N 71°27'41.06" E	
	CC =	490611.5163	1312470.2318			500.00'
	PT=	491085.5712	1312311.2601	206+61.43	N 71°27'41.06" E	
	POE =	491520.2858	1313607.5825	220+28.70		
MCAPLINE ROAD	POB =	490492.2148	1314112.3844	250+00.00	N 51°06'31.02" W	
	PC =	490511.4355	1314088.5567	250+30.61	N 51°06'31.02" W	
	PI	490535.7670	1314058.3930	250+69.37	N 78°20'22.67" W	
	CC =	490386.9015	1313988.1013			160.00'
	PT=	490543.5995	1314020.4389	251+06.66	N 78°20'22.67" W	
	PC =	490554.9650	1313965.3653	251+62.89	N 78°20'22.67" W	
	PI	490585.9561	1313815.1918	253+16.23	N 9°47'26.17" W	
	CC =	490775.3216	1314010.8401			225.00'
	PT=	490737.0609	1313789.1170	254+32.08	N 9°47'26.17" W	
	PC =	490778.2033	1313782.0174	254+73.83	N 9°47'26.17" W	
	PI	490951.2156	1313752.1622	256+49.40	N 46°46'20.22" W	
	CC =	490688.9282	1313264.6636			525.00'
	PT=	491071.4629	1313624.2359	258+12.70	N 46°46'20.22" W	
	PC =	491240.0009	1313444.9350	260+58.77	N 46°46'20.22" W	
	PI	491316.5752	1313363.4707	261+70.58	N 29°07'09.02" W	
	CC =	491764.6198	1313938.0628			720.00'
	PT=	491414.2479	1313309.0640	262+80.61	N 29°07'09.02" W	
	POE =	491419.2457	1313306.2801	262+86.33		
LAWNSBERRY PLACE	POB =	490983.4875	1313280.5012	300+00.00	N 56°36'17.97" E	
	POE =	491152.9468	1313537.5485	303+07.88		
℄ CONSTRUCTION	POINT NO.	NORTHING	EASTING	STATION	BEARING AHEAD	RADIUS
CURRAN AVENUE	POB =	489816.4830	1312814.8629	355+00.00	N 59°31'39.34" E	
	PC =	489855.4442	1312881.0788	355+76.83	N 59°31'39.34" E	
	PI	489921.0668	1312992.6067	357+06.23	N 3°50'39.36" E	
	CC =	490066.6032	1312756.8336			245.00'
	PT=	490050.1772	1313001.2824	358+14.93	N 3°50'39.36" E	
	POE =	490680.7696	1313043.6556	364+46.95		
LAWNSBERRY TERRACE SOUTH	POB =	490495.0822	1312730.9436	400+00.00	N 3°31'01.95" E	
	PI =	490565.0803	1312735.2459	400+70.13	N 3°49'35.23" E	
	POE =	490702.3217	1312744.4251	402+07.68		

BASELINE CONTROL COORDINATES

LAWNSBERRY TERRACE NORTH	POB =	490783.1811	1313449.4726	450+00.00	N 31°37'06.88" W	
	PC =	490847.5467	1313409.8458	450+75.59	N 31°37'06.88" W	
	PI	490881.4902	1313388.9484	451+15.45	N 46°45'19.92" W	
	CC =	490690.2681	1313154.3787			300.00'
	PT=	490908.7992	1313359.9125	451+54.84	N 46°45'19.92" W	
	PC =	491001.4876	1313261.3628	452+90.13	N 46°45'19.92" W	
	PI	491023.2772	1313238.1953	453+21.94	N 61°51'10.98" W	
	CC =	490826.6627	1313096.9358			240.00'
	PT=	491038.2804	1313210.1521	453+53.37	N 61°51'10.98" W	
	POE =	491044.5423	1313198.4476	453+66.65		
VANCE PLACE	POB =	490376.0143	1313387.7530	500+00.00	N 39°37'40.38" E	
	PC =	490430.9685	1313433.2601	500+71.35	N 39°37'40.38" E	
	PI	490546.9668	1313529.3174	502+21.96	N 59°03'05.25" E	
	CC =	489869.7055	1314111.0387			880.00'
	PT=	490624.4194	1313658.4828	503+69.67	N 59°03'05.25" E	
	PC =	490667.2151	1313729.8519	504+52.89	N 59°03'05.25" E	
	PI	490685.8770	1313760.9737	504+89.18	N 64°14'44.86" E	
	CC =	489981.1115	1314141.2664			800.00'
	PT=	490701.6446	1313793.6573	505+25.42	N 64°14'44.86" E	
	POE =	490703.5447	1313797.5959	505+29.79		
MCAPLINE COURT	POB =	490375.7798	1313864.16	550+00.00	N 26°46'44.24" E	
	POE =	490557.1806	1313955.709	552+03.19		

TRAVERSE CONTROL COORDINATES

POINT NO.	STATION	OFFSET	ALIGNMENT	NORTHING	EASTING	ELEVATION
AB6	357+77.93	-23.71	CURRAN	490018.7196	1312972.8804	286.64
AB120	360+63.22	16.05	CURRAN	490296.8290	1313033.9444	282.82
AB5	362+19.05	-18.56	CURRAN	490454.6276	1313009.8618	277.2
AB1	12+89.22	8.55	EAST FRANKLIN	490176.9504	1311862.0090	320.56
AB2	16+73.15	40.07	EAST FRANKLIN	490343.9148	1312209.1632	310.58
AB3	20+13.81	7.35	EAST FRANKLIN	490488.3513	1312506.5675	298.5
AB4	22+79.02	-40.4	EAST FRANKLIN	490533.3732	1312773.6763	288.77
AB7	28+78.50	-32.66	EAST FRANKLIN	490425.1907	1313373.7307	261.58
AB8	34+19.27	30.58	EAST FRANKLIN	490096.2754	1313814.2755	239.92
AB22	55+85.72	20.85	MERWOOD	490675.6955	1311537.5356	333.56
AB23	52+70.48	24.16	MERWOOD	490406.1211	1311700.9910	323.3
AB24	103+98.80	-24.38	TORRINGTON	490639.6185	1311998.1206	320.04
AB20	153+23.40	-15.14	BURGESS	490794.5302	1312370.7430	310.15
AB9			EAST FRANKLIN	490204.0037	1314055.0166	246.58
AB21	201+97.64	19.48	INDIAN SPRING	490842.6026	1311917.0221	329.34
AB19	205+71.94	16.11	INDIAN SPRING	491035.5731	1312237.1625	320.82
AB18	209+65.92	24.34	INDIAN SPRING	491159.3079	1312607.6887	308.57
AB17	212+85.45	19.24	INDIAN SPRING	491265.7350	1312909.0163	297.03
AB16	214+51.66	-17.94	INDIAN SPRING	491353.8253	1313054.7789	283.47
AB121	251+34.34	11.66	MCALPINE ROAD	490560.6115	1313995.6822	256.96
AB11	253+43.07	-15.06	MCALPINE ROAD	490646.4911	1313808.2763	251.04
AB12	256+58.71	-25.01	MCALPINE ROAD	490938.6766	1313697.8139	261.86
AB13	259+64.76	-14.26	MCALPINE ROAD	491165.2278	1313503.6690	257.44
AB15	262+45.16	24.62	MCALPINE ROAD	491396.7422	1313347.9578	272.12
AB14	452+90.40	16.66	N. LAWNSBERRY	491013.8206	1313272.5667	277.20
AB10	550+38.46	31.72	MCALPINE COURT	490395.8233	1313909.8042	260.47

CURVE DATA

							CENTER OF CURVE	
CURVE NO.	DELTA	Dc	R	T	L	E	NORTH	EAST
C-10	14°47'39.8794"	7°38'21.9741"	750.00'	97.37'	193.66'	6.29	489750.5030	1312600.6737
C-11	13°36'31.6849"	14°19'26.2016"	400.00'	47.73'	95.01'	2.84	490097.2161	1312540.9951
C-12	4°05'18.9596"	5°43'46.4806"	1000.00'	35.69'	71.36'	0.64	489499.0583	1312604.7618
C-13	1°47'06.8094"	5°43'46.4806"	1000.00'	15.58'	31.16'	0.12	489495.5037	1312701.0738
C-14	30°37'16.8161"	13°28'52.8957"	425.00'	116.35'	227.14'	15.64	490043.1690	1313121.7202
C-15	7°26'53.9948"	3°34'51.5504"	1600.00'	104.15'	208.00'	3.39	491621.5375	1314400.2530
C-16	60°57'23.7489"	32°44'25.6035"	175.00'	102.99'	186.18'	28.06	490296.1752	1313862.2502
C-150	20°00'08.3895"	7°47'43.2390"	735.00'	129.62'	256.59'	11.34	490479.4619	1311723.4998
C-200	12°03'45.2028"	11°27'32.9612"	500.00'	52.83'	105.27'	2.78	490611.5163	1312470.2318
C-250	27°13'51.6494"	35°48'35.5039"	160.00'	38.75'	76.04'	4.63	490386.9015	1313988.1013
C-251	68°32'56.5040"	25°27'53.2471"	225.00'	153.34'	269.19'	47.28	490775.3216	1314010.8401
C-252	36°58'54.0542"	10°54'48.5344"	525.00'	175.57'	338.86'	28.58	490688.9282	1313264.6636
C-253	17°39'11.1983"	7°57'27.8898"	720.00'	111.80'	221.84'	8.63	491764.6198	1313938.0628

CURVE DATA

							CENTER OF CURVE	
CURVE NO.	DELTA	Dc	R	T	L	E	NORTH	EAST
C-350	55°40'59.9758"	23°23'09.7168"	245.00'	129.40'	238.11'	32.07	490066.6032	1312756.8336
C-450	15°08'13.0371"	19°05'54.9353"	300.00'	39.86'	79.26'	2.64	490690.2681	1313154.3787
C-451	15°05'51.0586"	23°52'23.6693"	240.00'	31.80'	63.24'	2.1	490826.6627	1313096.9358
C-500	19°25'24.8681"	6°30'39.1826"	880.00'	150.61'	298.32'	12.79	489869.7055	1314111.0387
C-501	5°11'39.6130"	7°09'43.1008"	800.00'	36.29'	72.53'	0.82	489981.1115	1314141.2664

100' 0 100' 200'
SCALE: 1"=100'

McCormick Taylor
Engineers & Planners Since 1946
509 South Exeter Street
4th Floor
Baltimore, Maryland 21202
(410) 662-7400

GEOMETRIC LAYOUT
FRANKLIN KNOLLS-PHASE 4
SLIGO (13th) ELECTION DISTRICT
PARCEL X, SUBDIVISION X, LIBER X FOLIO X
MONTGOMERY COUNTY, MARYLAND

CLIENT: MONTGOMERY COUNTY DEPT OF
ENVIRONMENTAL PROTECTION
255 ROCKVILLE PIKE, RM. 120
ROCKVILLE, MD 20850-4166
MR. PAUL BOGLE, P.E.
(240) 777-7757

DESIGN KCS
DRAFT WJW
APPROVED HJD
DATE JUNE 2014
SCALE 1"=100'

FILE: I:\5182\13 - Roadway LID – Forest Estates and the Four Corners Area\Design\Engineering\PlanSet\FK P4\pGS-P002_FK4.dgn
PLOTTED: Thursday, June 05, 2014 AT 02:46 PM

TRAVERSE CONTROL COORDINATES

POINT NO.	STATION	OFFSET	ALIGNMENT	NORTHING	EASTING	ELEVATION
AB1	12+89.22	8.55	EAST FRANKLIN	490176.9504	1311862.0090	320.56
AB2	16+73.15	40.07	EAST FRANKLIN	490343.9148	1312209.1632	310.58
AB3	20+13.81	7.35	EAST FRANKLIN	490488.3513	1312506.5675	298.50
AB4	22+79.02	-40.4	EAST FRANKLIN	490533.3732	1312773.6763	288.77
AB7	28+78.50	-32.66	EAST FRANKLIN	490425.1907	1313373.7307	261.58
AB8	34+19.27	30.58	EAST FRANKLIN	490096.2754	1313814.2755	239.92
AB23	52+70.48	24.16	MERWOOD	490406.1211	1311700.9910	323.30
AB22	55+85.72	20.85	MERWOOD	490675.6955	1311537.5356	333.56
AB24	103+98.80	-24.38	TORRINGTON	490639.6185	1311998.1206	320.04
AB20	153+23.40	-15.14	BURGESS	490794.5302	1312370.7430	310.15

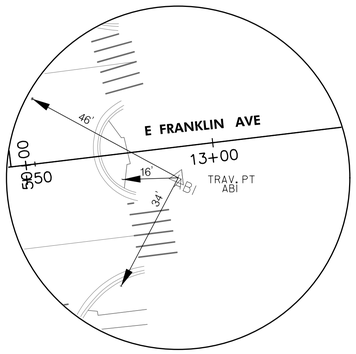

TP AB1 (STA. 12+89.22, OFFSET 8.55)
NORTHING 490176.9504
EASTING 1311862.0090
ELEVATION 320.56

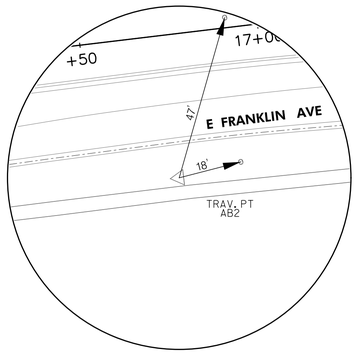

TP AB2 (STA. 16+73.15, OFFSET 40.07)
NORTHING 490343.9148
EASTING 1312209.1632
ELEVATION 310.58

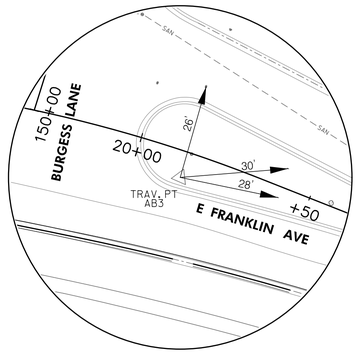

TP AB3 (STA. 20+13+81, OFFSET 7.35)
NORTHING 490488.3513
EASTING 1312506.5675
ELEVATION 298.50

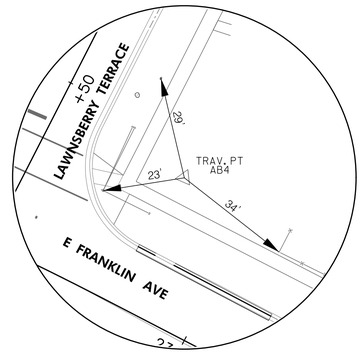

TP AB4 (STA. 22+79.02, OFFSET -40.40)
NORTHING 490533.3732
EASTING 1312773.6763
ELEVATION 288.77

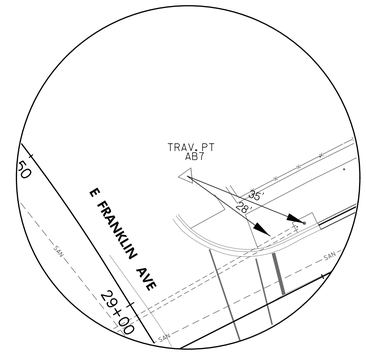

TP AB7 (STA. 28+78.50, OFFSET -32.66)
NORTHING 490425.1907
EASTING 1313373.7307
ELEVATION 261.58

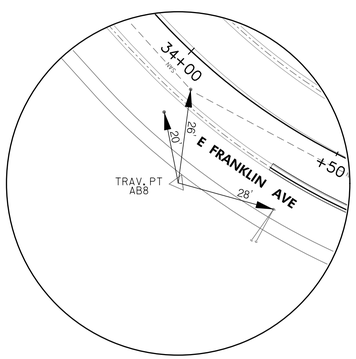

TP AB8 (STA. 34+19.27, OFFSET 30.58)
NORTHING 490096.2754
EASTING 1313814.2755
ELEVATION 239.92

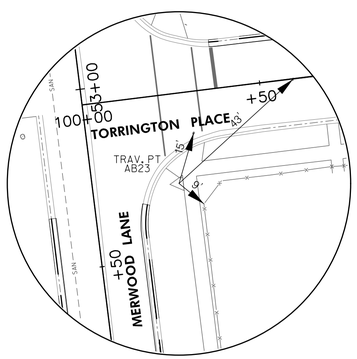

TP AB23 (STA. 52+70.48, OFFSET 24.16)
NORTHING 490406.1211
EASTING 1311700.9910
ELEVATION 323.30

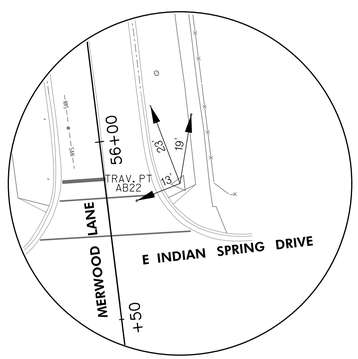

TP AB22 (STA. 55+85.72, OFFSET 20.85)
NORTHING 490675.6955
EASTING 1311537.5356
ELEVATION 333.56

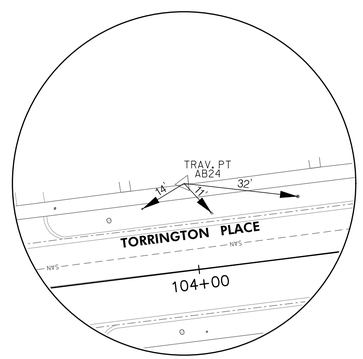

TP AB24 (STA. 103+98.80, OFFSET -24.38)
NORTHING 490639.6185
EASTING 1311998.1206
ELEVATION 320.04

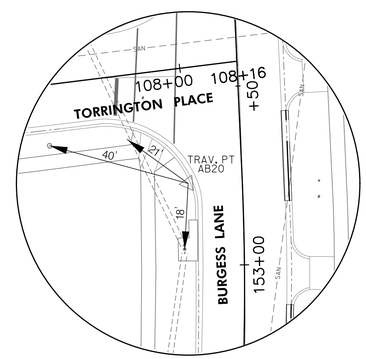

TP AB20 (STA. 153+23.40, OFFSET -15.14)
NORTHING 490794.5302
EASTING 1312370.7430
ELEVATION 310.15

20' 0 20' 40'
SCALE: 1"=20'

McCormick Taylor
Engineers & Planners Since 1946
509 South Exeter Street
4th Floor
Baltimore, Maryland 21202
(410) 662-7400

GEOMETRIC LAYOUT
FRANKLIN KNOLLS-PHASE 4
SLIGO (13th) ELECTION DISTRICT
PARCEL X, SUBDIVISION X, LIBER X FOLIO X
MONTGOMERY COUNTY, MARYLAND

CLIENT: MONTGOMERY COUNTY DEPT OF
ENVIRONMENTAL PROTECTION
255 ROCKVILLE PIKE, RM. 120
ROCKVILLE, MD 20850-4166
MR. PAUL BOGLE, P.E.
(240) 777-7757

DESIGN	KCS
DRAFT	WJW
APPROVED	HJD
DATE	JUNE 2014
SCALE	1"=100'

SHEET 5 OF 52

FILE: 13512513 - Roadway LID - Forest Estates and the Four Corners Area\Design\Engineering\Plan\Sid\FK P4\pGS-P003_FK4.dgn
PLOTTED: Thursday, June 05, 2014 AT 02:46 PM

TRAVERSE CONTROL COORDINATES

POINT NO.	STATION	OFFSET	ALIGNMENT	NORTHING	EASTING	ELEVATION
AB21	201+97.64	19.48	INDIAN SPRING	490842.6026	1311917.0221	329.34
AB19	205+71.94	16.11	INDIAN SPRING	491035.5731	1312237.1625	320.82
AB18	209+65.92	24.34	INDIAN SPRING	491159.3079	1312607.6887	308.57
AB17	212+85.45	19.24	INDIAN SPRING	491265.7350	1312909.0163	297.03
AB16	214+51.66	-17.94	INDIAN SPRING	491353.8253	1313054.7789	283.47
AB15	217+43.27	34.59	INDIAN SPRING	491396.7422	1313347.9578	272.12
AB121	251+34.34	11.66	MCALPINE ROAD	490560.6115	1313995.6822	256.96
AB11	253+43.07	-15.06	MCALPINE ROAD	490646.4911	1313808.2763	251.04
AB12	256+58.71	-25.01	MCALPINE ROAD	490938.6766	1313697.8139	261.86
AB13	259+64.76	-14.26	MCALPINE ROAD	491165.2278	1313503.6690	257.44

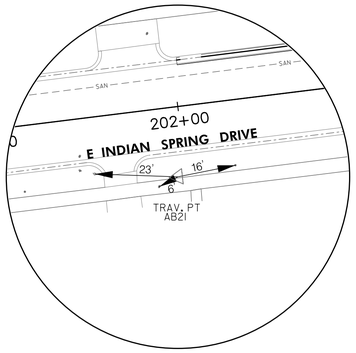

TP AB21 (STA. 201+97.64, OFFSET 19.48)
NORTHING 490842.6026
EASTING 1311917.0221
ELEVATION 329.34

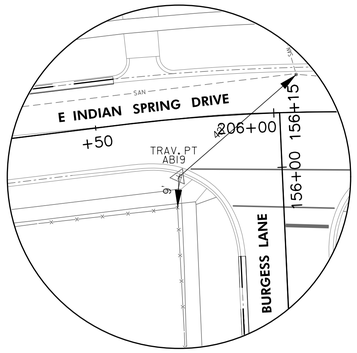

TP AB19 (STA. 205+71.94, OFFSET 16.11)
NORTHING 491035.5731
EASTING 1312237.1625
ELEVATION 320.82

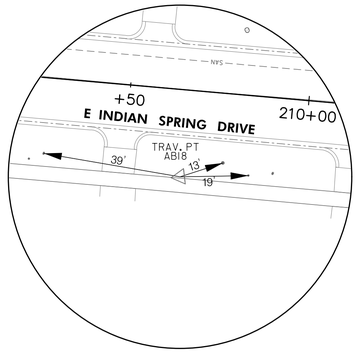

TP AB18 (STA. 209+65.92, OFFSET 24.34)
NORTHING 491159.3079
EASTING 1312607.6887
ELEVATION 308.57

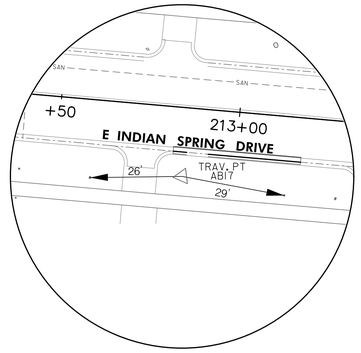

TP AB17 (STA. 212+85.45, OFFSET 19.24)
NORTHING 491265.7350
EASTING 1312909.0163
ELEVATION 297.03

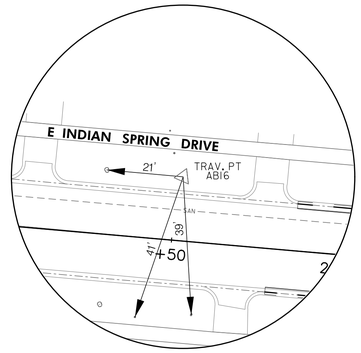

TP AB16 (STA. 214+51.66, OFFSET -17.94)
NORTHING 491353.8253
EASTING 1313054.7789
ELEVATION 283.47

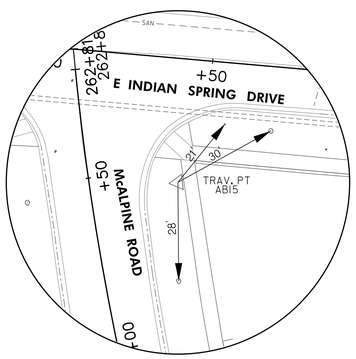

TP AB15 (STA. 217+43.27, OFFSET 34.59)
NORTHING 491396.7422
EASTING 1313347.9578
ELEVATION 272.12

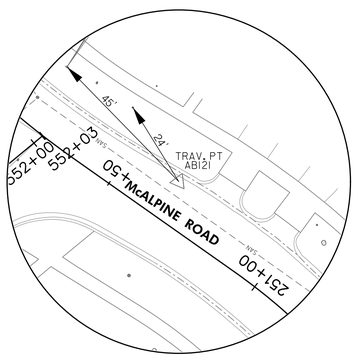

TP AB121 (STA. 251+34.34, OFFSET 11.66)
NORTHING 490560.6115
EASTING 1313995.6822
ELEVATION 256.96

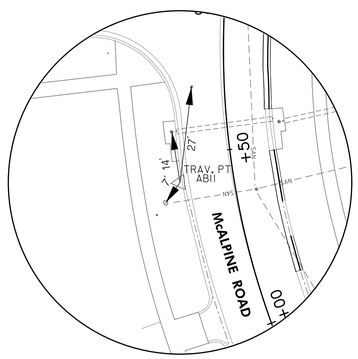

TP AB11 (STA. 253+43.07, OFFSET -15.06)
NORTHING 490646.4911
EASTING 1313808.2763
ELEVATION 251.04

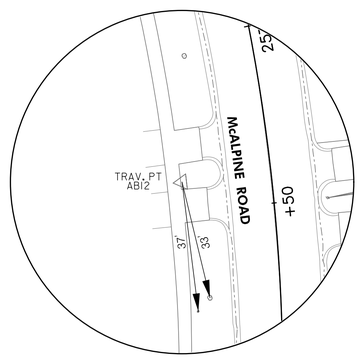

TP AB12 (STA. 256+58.71, OFFSET -25.01)
NORTHING 490938.6766
EASTING 1313697.8139
ELEVATION 261.86

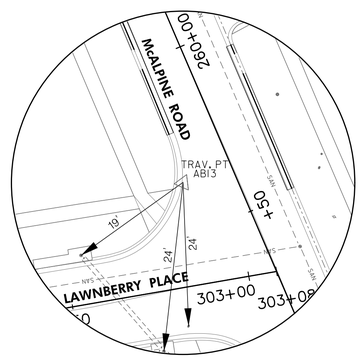

TP AB13 (STA. 259+64.76, OFFSET -14.26)
NORTHING 491165.2278
EASTING 1313503.6690
ELEVATION 257.44

20' 0 20' 40'
SCALE: 1"=20'

McCormick Taylor
Engineers & Planners
Since 1946
509 South Exeter Street
4th Floor
Baltimore, Maryland 21202
(410) 662-7400

GEOMETRIC LAYOUT
FRANKLIN KNOLLS-PHASE 4
SLIGO (13th) ELECTION DISTRICT
PARCEL X, SUBDIVISION X, LIBER X FOLIO X
MONTGOMERY COUNTY, MARYLAND

CLIENT: MONTGOMERY COUNTY DEPT OF
ENVIRONMENTAL PROTECTION
255 ROCKVILLE PIKE, RM. 120
ROCKVILLE, MD 20850-4166
MR. PAUL BOGLE, P.E.
(240) 777-7757

DESIGN	KCS
DRAFT	WJW
APPROVED	HJD
DATE	JUNE 2014
SCALE	1"=100'

SHEET 6 OF 52

FILE: 1151B213 - Roadway LID - Forest Estates and the Four Corners Area\Design\Engineering\Plans\Set\Fk P4\pGS-P004_FK4.dgn
PLOTTED: Thursday, June 05, 2014 AT 02:46 PM

TRAVERSE CONTROL COORDINATES

POINT NO.	STATION	OFFSET	ALIGNMENT	NORTHING	EASTING	ELEVATION
AB6	352+77.93	-23.71	CURRAN	490018.7196	1312972.8804	286.64
AB120	355+63.22	16.05	CURRAN	490296.8290	1313033.9444	282.82
AB5	357+19.05	-18.56	CURRAN	490454.6276	1313009.8618	277.20
AB14	452+90.40	16.66	N. LAWNSBERRY	491013.8206	1313272.5667	277.20
AB10	550+38.46	31.72	MCALPINE COURT	490395.8233	1313909.8042	260.47

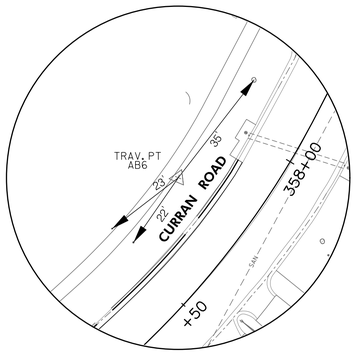

TP AB6 (STA. 352+77.93, OFFSET -23.71)
NORTHING 490018.7196
EASTING 1312972.8804
ELEVATION 286.64

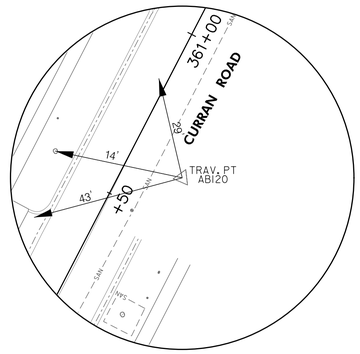

TP AB120 (STA. 355+63.22, OFFSET 16.05)
NORTHING 490296.8290
EASTING 1313033.9444
ELEVATION 282.82

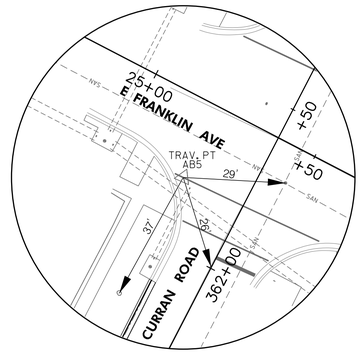

TP AB5 (STA. 357+19.05, OFFSET -18.56)
NORTHING 490454.6276
EASTING 1313009.8618
ELEVATION 277.20

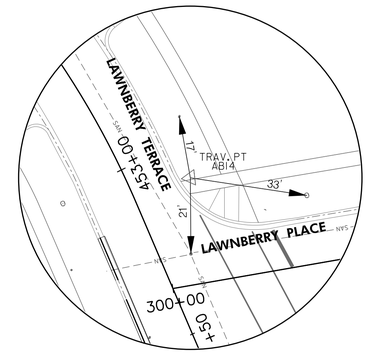

TP AB14 (STA. 452+90.40, OFFSET 16.66)
NORTHING 491013.8206
EASTING 1313272.5667
ELEVATION 277.20

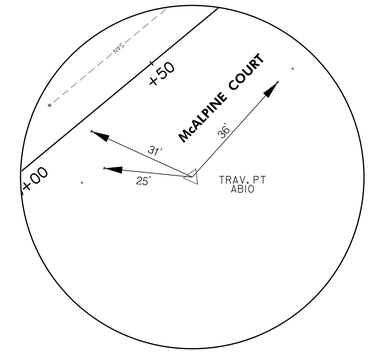

TP AB10 (STA. 550+38.46, OFFSET 31.72)
NORTHING 490395.8233
EASTING 1313909.8042
ELEVATION 260.47

20' 0 20' 40'
SCALE: 1"=20'

McCormick Taylor
Engineers & Planners Since 1946
509 South Exeter Street
4th Floor
Baltimore, Maryland 21202
(410) 662-7400

GEOMETRIC LAYOUT
FRANKLIN KNOLLS-PHASE 4
SLIGO (13th) ELECTION DISTRICT
PARCEL X, SUBDIVISION X, LIBER X FOLIO X
MONTGOMERY COUNTY, MARYLAND

CLIENT: MONTGOMERY COUNTY DEPT OF
ENVIRONMENTAL PROTECTION
255 ROCKVILLE PIKE, RM. 120
ROCKVILLE, MD 20850-4166
MR. PAUL BOGLE, P.E.
(240) 777-7757

DESIGN	KCS
DRAFT	WJW
APPROVED	HJD
DATE	JUNE 2014
SCALE	1"=100'

SHEET 7 OF 52

FILE: 13512/13 - Roadway LID - Forest Estates and the Four Corners Area\Design\Engineering\PlanSet\FK P4\pGS-P005_FK4.dgn
PLOTTED: Thursday, June 05, 2014 AT 02:46 PM

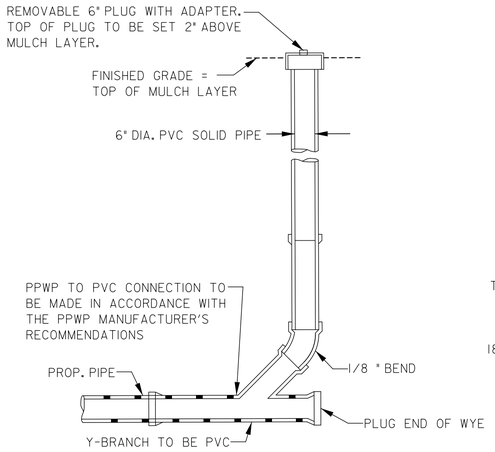

CO X STANDARD CLEANOUT DETAIL

N.T.S.

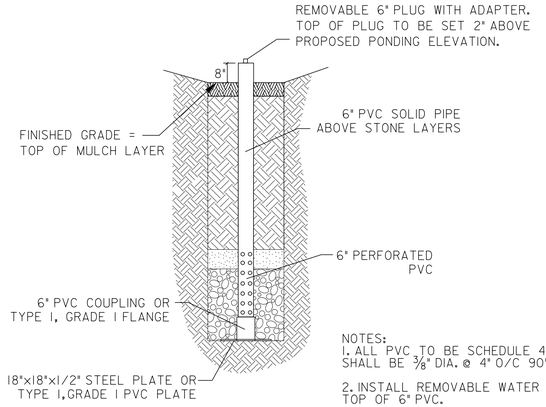

NOTES:
1. ALL PVC TO BE SCHEDULE 40. PERFORATIONS SHALL BE 3/8" DIA. @ 4" O/C 90° ALL AROUND PIPE.

2. INSTALL REMOVABLE WATER TIGHT PVC CAP ON TOP OF 6" PVC.

3. BOTTOM EXCAVATION IS TO BE IN NATURAL UNCOMPACTED EARTH.

4. THREE 1" HOLES SHOULD BE DRILLED INTO THE BOTTOM PLATE TO ALLOW WATER TO DRAIN FROM THE OBSERVATION WELL.

5. REFER TO BMP PROFILE FOR SPECIFIC STONE AND PLANTING MEDIA DEPTHS AND ELEVATIONS.

6. PVC PIPE SHALL BE ATTACHED TO THE FLANGE WITH SOLVENT CEMENT PER THE MANUFACTURER'S SPECIFICATIONS.

OW X OBSERVATION WELL DETAIL

N.T.S.

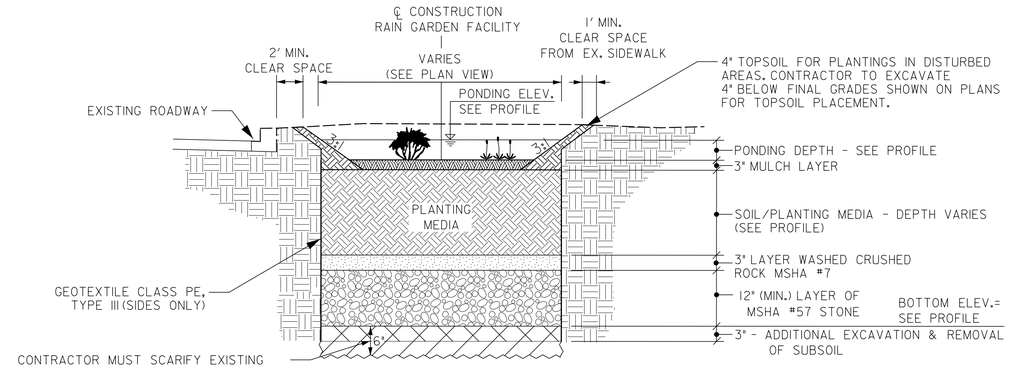

CONTRACTOR MUST SCARIFY EXISTING SUBSOIL AT BOTTOM OF EXCAVATION, THEN ADD 3" OF MULCH AND MIX THROUGHLY INTO THE EXISTING SUBSOIL.

TYPICAL SECTION RAIN GARDEN DETAIL

NOT TO SCALE

NOTES:
1. FOR ALL DISTURBED AREAS, REGARDLESS OF SLOPE, FOUR (4) INCHES OF TOPSOIL SHALL BE USED.
2. TOPSOIL SHALL NOT CONTAIN MORE THAN 50% SAND.
3. SOIL/PLANTING MEDIA TO FOLLOW SPECIFICATION. (SEE E&S SHEET 50)

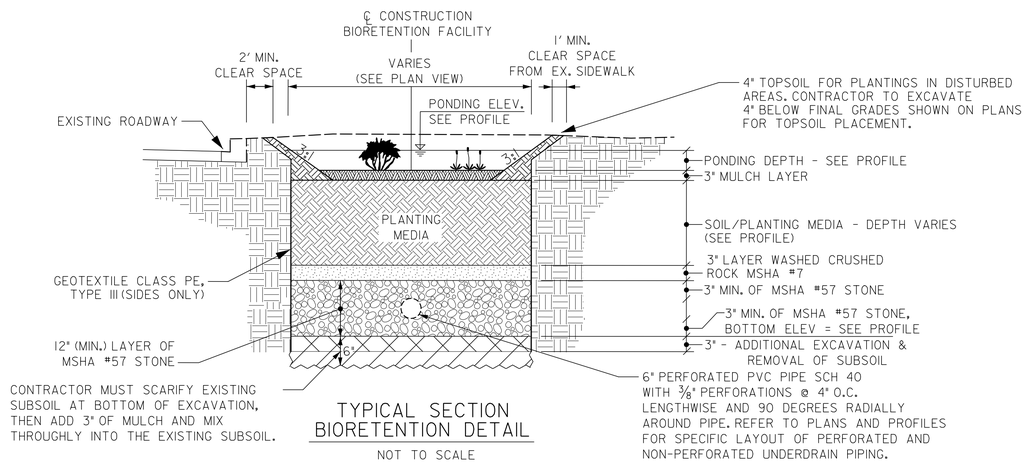

CONTRACTOR MUST SCARIFY EXISTING SUBSOIL AT BOTTOM OF EXCAVATION, THEN ADD 3" OF MULCH AND MIX THROUGHLY INTO THE EXISTING SUBSOIL.

TYPICAL SECTION BIORETENTION DETAIL

NOT TO SCALE

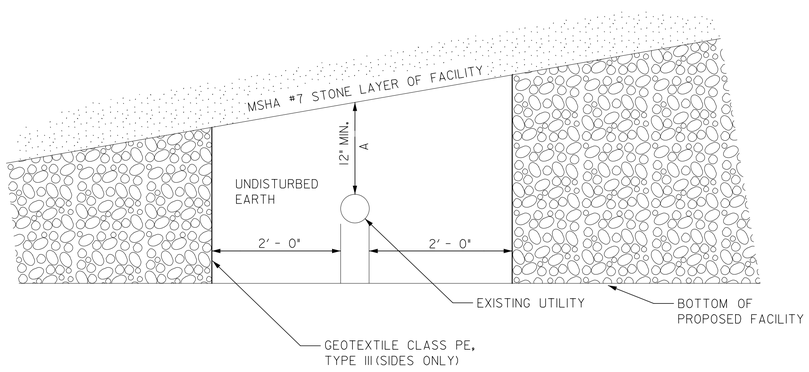

NOTES:
1. PRIOR TO BEGINNING CONSTRUCTION, THE CONTRACTOR SHALL FIELD LOCATE ALL EXISTING UTILITIES AND SHALL HAND DIG AROUND UTILITIES LOCATED IN THE VICINITY OF THE PROPOSED EXCAVATION. CONTACT MISS UTILITY 48 HOURS PRIOR TO DIGGING TO HAVE UTILITIES LOCATED.

2. WHEN THE CONTRACTOR ENCOUNTERS AN EXISTING UTILITY WITH LESS THAN 12" OF VERTICAL CLEARANCE BETWEEN THE TOP OF UTILITY AND THE BOTTOM OF THE FACILITY, THE TYPICAL UTILITY CROSSING TREATMENT SHALL BE FOLLOWED.

3. WHEN THE VERTICAL CLEARANCE BETWEEN THE TOP OF UTILITY AND THE BOTTOM OF THE NO. 57 STONE LAYER (SHOWN AS DIMENSION A) IS LESS THAN 12", ADJUST MEDIA DEPTH AND CHANNEL SLOPE TO OBTAIN THE REQUIRED COVER DEPTH.

4. UNDISTURBED EARTH AREA SURROUNDING EXISTING UTILITY SHALL EXTEND ACROSS THE ENTIRE FACILITY WIDTH.

TYPICAL UTILITY CROSSING DETAIL

NOT TO SCALE

DETAILS REVISED 01/14

McCormick Taylor
Engineers & Planners Since 1946
509 South Exeter Street
4th Floor
Baltimore, Maryland 21202
(410) 662-7400

STORMWATER MANAGEMENT DETAILS
FRANKLIN KNOLLS-PHASE 4
SLIGO (13th) ELECTION DISTRICT
PARCEL X, SUBDIVISION X, LIBER X FOLIO X
MONTGOMERY COUNTY, MARYLAND

CLIENT: MONTGOMERY COUNTY DEPT OF ENVIRONMENTAL PROTECTION
255 ROCKVILLE PIKE, RM. 120
ROCKVILLE, MD 20850-4166
MR. PAUL BOGLE, P.E.
(240) 777-7757

DESIGN	KCS
DRAFT	WJW
APPROVED	HJD
DATE	JUNE 2014
SCALE	NOT TO SCALE

SHEET 8 OF 52

FILE: I:\5192\13 - Roadway LID - Forest Estates and the Four Corners Area\Design\Engineering\Plan Set\FK P4\pDE-D001_FK4.dgn
PLOTTED: Thursday, June 05, 2014 AT 02:46 PM

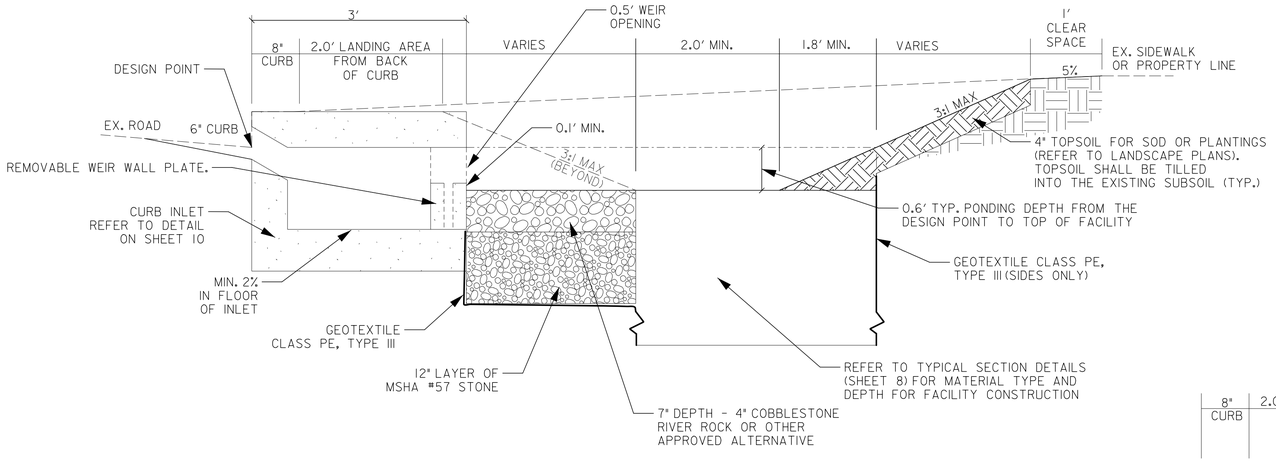

TYPICAL RIGHT OF WAY INLET SECTION
(BMPs 71, 107A & 112 ONLY)
SCALE: 1"=1'

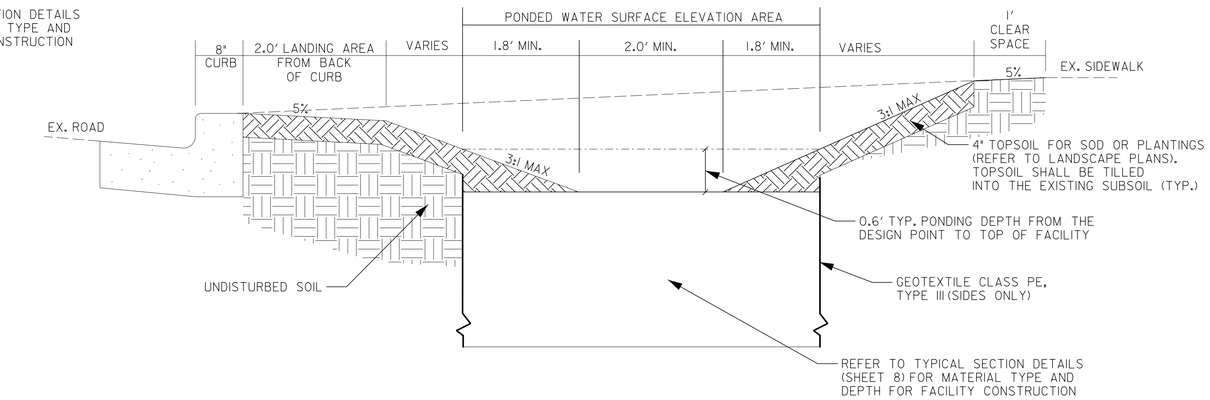

TYPICAL RIGHT OF WAY SECTION (BMPs 71, 107A & 112 ONLY)
SCALE: 1"=1'

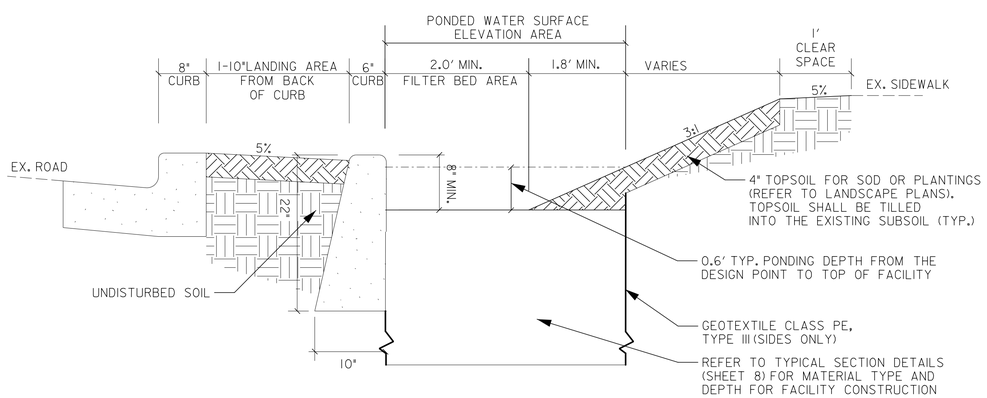

TYPICAL RIGHT OF WAY CURB SECTION
SCALE: 1"=1'

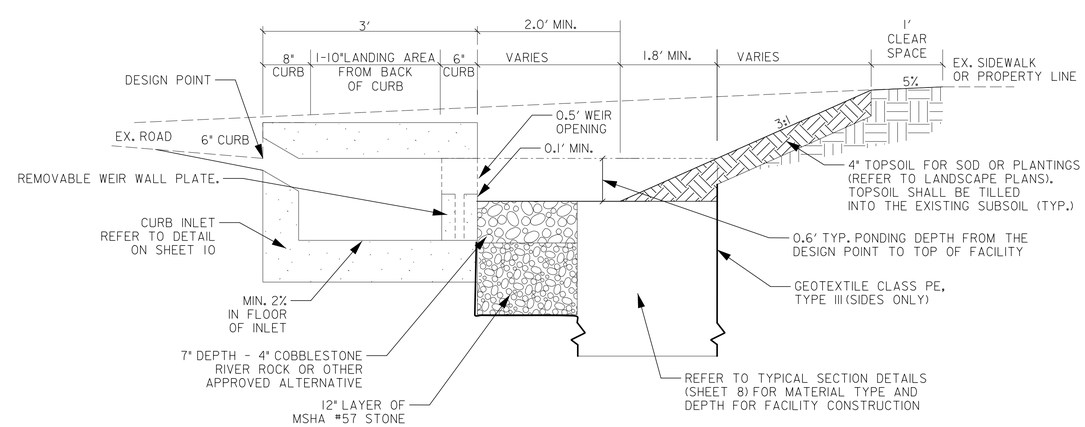

TYPICAL RIGHT OF WAY INLET SECTION
SCALE: 1"=1'

DETAILS REVISED 01/14

McCormick Taylor
Engineers & Planners Since 1946
509 South Exeter Street
4th Floor
Baltimore, Maryland 21202
(410) 662-7400

STORMWATER MANAGEMENT DETAILS
FRANKLIN KNOLLS-PHASE 4
SLIGO (13th) ELECTION DISTRICT
PARCEL X, SUBDIVISION X, LIBER X FOLIO X
MONTGOMERY COUNTY, MARYLAND

CLIENT: MONTGOMERY COUNTY DEPT OF ENVIRONMENTAL PROTECTION
255 ROCKVILLE PIKE, RM. 120
ROCKVILLE, MD 20850-4166
MR. PAUL BOGLE, P.E.
(240) 777-7757

DESIGN	KCS
DRAFT	WJW
APPROVED	HJD
DATE	JUNE 2014
SCALE	NOT TO SCALE

SHEET 9 OF 52

FILE: I:\51\52\13 - Roadway LID - Forest Estates and the Four Corners Area\Design\Engineering\PlanSet\FK Ph\pDE-D002_FK4.dgn
PLOTTED: Thursday, June 05, 2014 AT 02:46 PM

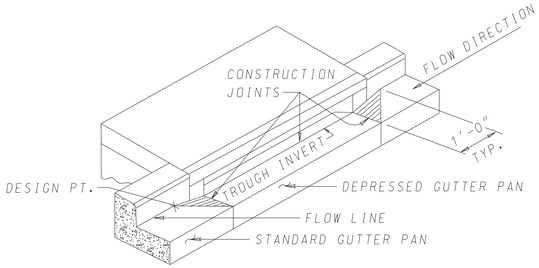

ISOMETRIC

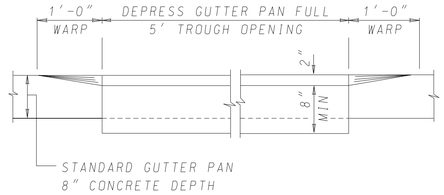

SECTION A–A
(SHOWN LOOKING TOWARD ROADWAY)

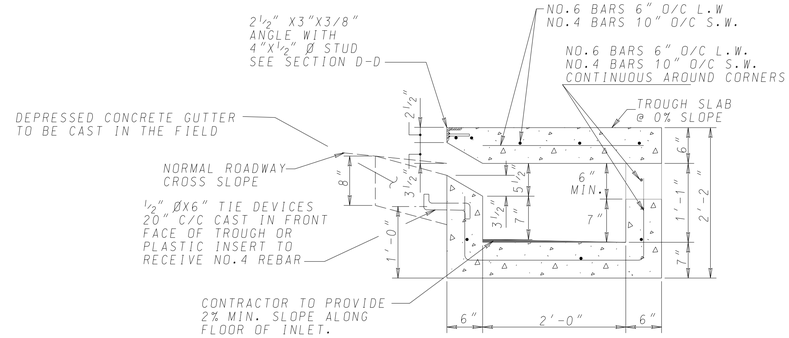

SECTION C–C
(MODIFIED MSHA STD. NO. MD 374.55-01)

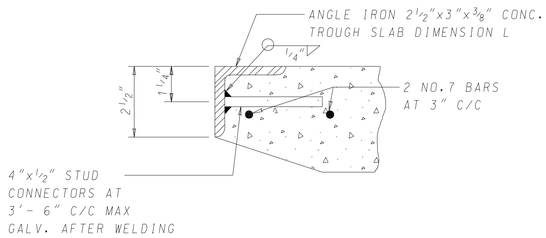

SECTION D–D

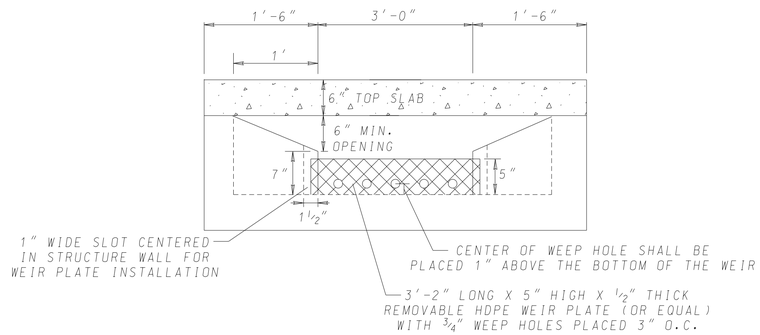

SECTION E–E
(SHOWN LOOKING TOWARD ROADWAY)

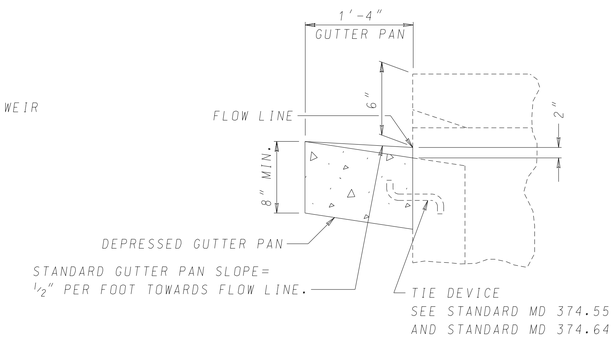

SECTION B–B

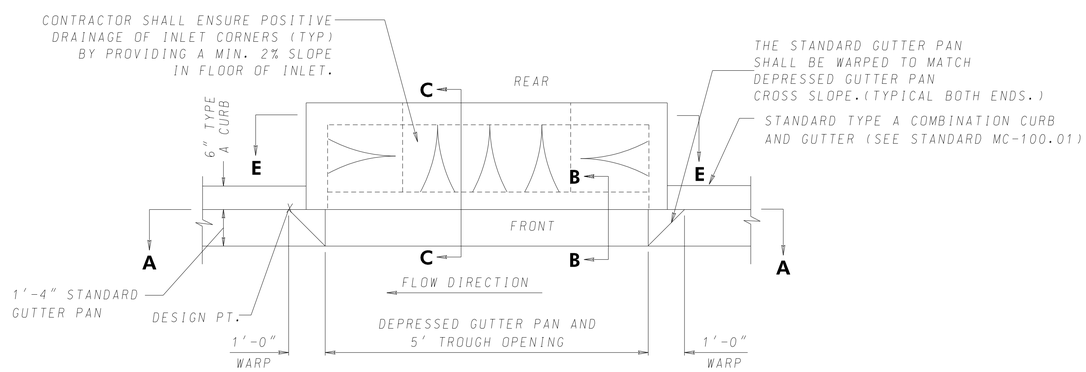

PLAN

WHENEVER STANDARD MC-101.01 CURB IS USED IN CONJUCTION WITH THIS STANDARD, A 10 FOOT TRANSITION SHALL BE PROVIDED FROM THE STANDARD MC-100.01 TO STANDARD MC-101.01 FOR CURB RETURNS AND CURB SECTIONS WHICH INCLUDES INLETS.

GENERAL NOTES:
1. REFER TO MARYLAND STATE HIGHWAY ADMINISTRATION FOR MATERIALS AND METHODS OF CONSTRUCTION.
2. CONTRACTOR MUST PROVIDE SHOP DRAWINGS AND SEALED COMPUTATIONS FOR THE CURB INLETS TO MONTGOMERY COUNTY DEP FOR APPROVAL.
3. CURB INLET SHALL BE H-20 LOAD RATED.
4. STATIONING, TC/TG AND INVERT ELEVATIONS SHOWN IN THE DRAINAGE STRUCTURE TABLES ARE TAKEN AT THE CENTER OF THE STRUCTURE, ALONG THE CURBLINE.
5. MODIFIED CURB OPENING INLET SHALL BE MEASURED AND PAID FOR AT THE CONTRACT UNIT PRICE PER CUBIC YARD OF MIX NO. 6 CONCRETE FOR MISCELLANEOUS STRUCTURES.

I/X MODIFIED CURB OPENING INLET DETAIL
NOT TO SCALE

DETAILS REVISED 01/14

McCormick Taylor
Engineers & Planners Since 1946
509 South Exeter Street
4th Floor
Baltimore, Maryland 21202
(410) 662-7400

STORMWATER MANAGEMENT DETAILS
FRANKLIN KNOLLS-PHASE 4
SLIGO (13th) ELECTION DISTRICT
PARCEL X, SUBDIVISION X, LIBER X FOLIO X
MONTGOMERY COUNTY, MARYLAND

CLIENT: MONTGOMERY COUNTY DEPT OF ENVIRONMENTAL PROTECTION
255 ROCKVILLE PIKE, RM. 120
ROCKVILLE, MD 20850-4166
MR. PAUL BOGLE, P.E.
(240) 777-7757

DESIGN	KCS
DRAFT	WJW
APPROVED	HJD
DATE	JUNE 2014
SCALE	NOT TO SCALE

SHEET 10 OF 52

FILE: I:\5192\13 - Roadway LID - Forest Estates and the Four Corners Area\Design\Engineering\PlanSet\FK Ph4\DE-D003_FK4.dgn
PLOTTED: Thursday, June 05, 2014 AT 02:46 PM

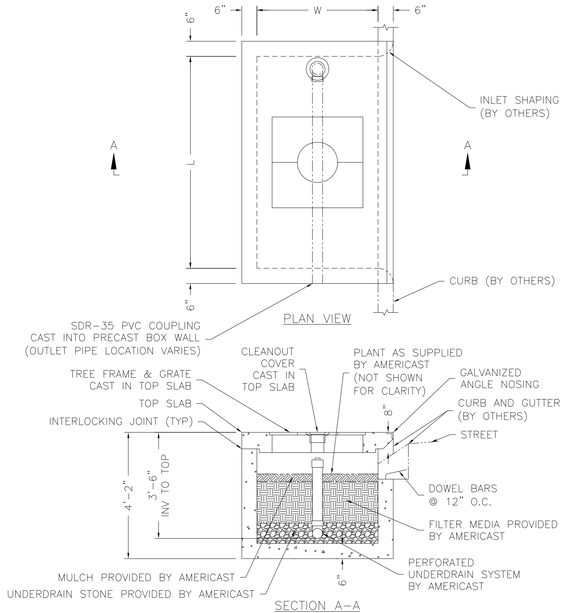

DESIGNATION	L	W	TREE GRATE QTY & SIZE	OUTLET PIPE
6 x 4	6'-0"	4'-0"	(1) 3x3	4" SDR-35 PVC
8 x 4	8'-0"	4'-0"	(1) 3x3	4" SDR-35 PVC
8 x 6	8'-0"	6'-0"	(1) 4x4	4" SDR-35 PVC
10 x 6	10'-0"	6'-0"	(1) 4x4	6" SDR-35 PVC
12 x 4	12'-0"	4'-0"	(2) 3x3	4" SDR-35 PVC
12 x 6	12'-0"	6'-0"	(2) 4x4	6" SDR-35 PVC
13 x 7	13'-0"	7'-0"	(2) 4x4	6" SDR-35 PVC

MODIFICATIONS OF DRAWINGS ARE ONLY PERMITTED BY WRITTEN AUTHORIZATION FROM FILTERRA

DRAWING AVAILABLE IN TIF FILE FORMAT.

AMERICAST®

Copyright © 2007 by Americast

DATE: 09-04-07 DWG: FTNW-3

PRECAST FILTERRA® UNIT NARROW WIDTH CONFIGURATION

filterra®

US PAT 6,277,274 AND 6,569,321

GENERAL NOTES:

1. CONTRACTOR TO PERFORM ALL WORK AS SHOWN "BY OTHERS".
2. CONTRACTOR IS RESPONSIBLE FOR ENSURING THAT SUPPLIER FULFILLS SPECIFIED RESPONSIBILITIES AND PERFORMS SPECIFIED DUTIES.

FILTERRA® STANDARD NOTES

CONSTRUCTION AND INSTALLATION

A. EACH UNIT SHALL BE CONSTRUCTED AT THE LOCATIONS AND ELEVATIONS ACCORDING TO THE SIZES SHOWN ON THE APPROVED DRAWINGS.

B. IF THE FILTERRA IS STORED BEFORE INSTALLATION, THE TOP SLAB MUST BE PLACED ON THE BOX USING THE 2x4 WOOD PROVIDED, TO PREVENT ANY CONTAMINATION FROM THE SITE. ALL INTERNAL FITTINGS SUPPLIED (IF ANY), MUST BE LEFT IN PLACE AS PER THE DELIVERY.

C. THE UNIT SHALL BE PLACED ON A COMPACTED SUB-GRADE WITH A MINIMUM OF 6-INCH GRAVEL BASE MATCHING THE FINAL GRADE OF THE CURB LINE IN THE AREA OF THE UNIT. THE UNIT IS TO BE PLACED SUCH THAT THE UNIT AND TOP SLAB MATCH THE GRADE OF THE CURB IN THE AREA OF THE UNIT. COMPACT UNDISTURBED SUB-GRADE MATERIALS TO 95% OF MAXIMUM DENSITY AT +1-2% OF OPTIMUM MOISTURE. UNSUITABLE MATERIAL BELOW SUB-GRADE SHALL BE REPLACED TO THE SITE ENGINEER'S APPROVAL.

D. OUTLET CONNECTIONS SHALL BE ALIGNED AND SEALED TO MEET THE APPROVED DRAWINGS WITH MODIFICATIONS NECESSARY TO MEET SITE CONDITIONS AND LOCAL REGULATIONS.

E. ONCE THE UNIT IS SET, THE INTERNAL WOODEN FORMS AND PROTECTIVE MESH COVER MUST BE LEFT INTACT. REMOVE ONLY THE TEMPORARY WOODEN SHIPPING BLOCKS BETWEEN THE BOX AND TOP SLAB. THE TOP LID SHOULD BE SEALED ONTO THE BOX SECTION BEFORE BACKFILLING, USING A NON-SHRINK GROUT, BUTYL RUBBER OR SIMILAR WATERPROOF SEAL. THE BOARDS ON TOP OF THE LID AND BOARDS SEALED IN THE UNIT'S THROAT MUST NOT BE REMOVED. THE SUPPLIER (AMERICAST OR ITS AUTHORIZED DEALER) WILL REMOVE THESE SECTIONS AT THE TIME OF ACTIVATION. BACKFILLING SHOULD BE PERFORMED IN A CAREFUL MANNER, BRINGING THE APPROPRIATE FILL MATERIAL UP IN 6" LIFTS ON ALL SIDES. PRECAST SECTIONS SHALL BE SET IN A MANNER THAT WILL RESULT IN A WATERTIGHT JOINT. IN ALL INSTANCES, INSTALLATION OF FILTERRA UNIT SHALL CONFORM TO ASTM SPECIFICATION C891 "STANDARD PRACTICE FOR INSTALLATION OF UNDERGROUND PRECAST UTILITY STRUCTURES", UNLESS DIRECTED OTHERWISE IN CONTRACT DOCUMENTS.

F. THE CONTRACTOR IS RESPONSIBLE FOR INLET PROTECTION/SEDIMENT CONTROL AND CLEANING AROUND EACH FILTERRA UNIT.

G. CURB AND GUTTER CONSTRUCTION (WHERE PRESENT) SHALL ENSURE THAT THE FLOW-LINE OF THE FILTERRA UNIT IS AT A GREATER ELEVATION THAN THE FLOW LINE OF THE BYPASS STRUCTURE OR RELIEF (DROP INLET, CURB CUT OR SIMILAR). FAILURE TO COMPLY WITH THIS GUIDELINES MAY CAUSE FAILURE AND/OR DAMAGE TO THE FILTERRA ENVIRONMENTAL DEVICE.

H. EACH FILTERRA UNIT MUST RECEIVE ADEQUATE IRRIGATION TO ENSURE SURVIVAL OF THE LIVING SYSTEM DURING PERIODS OF DRIER WEATHER. THIS MAY BE ACHIEVED THROUGH A PIPED SYSTEM, GUTTER FLOW OR THROUGH THE TREE GRATE.

ACTIVATION

A. ACTIVATION OF THE FILTERRA UNIT IS PERFORMED ONLY BY THE SUPPLIER. PURCHASER IS RESPONSIBLE FOR FILTERRA INLET PROTECTION AND SUBSEQUENT CLEAN OUT COST. THIS PROCESS CANNOT COMMENCE UNTIL THE PROJECT SITE IS FULLY STABILIZED AND CLEANED (FULL LANDSCAPING, GRASS COVER, FINAL PAVING AND STREET SWEEPING COMPLETED), NEGATING THE CHANGE OF CONSTRUCTION MATERIALS CONTAMINATING THE FILTERRA SYSTEM. CARE SHALL BE TAKEN DURING CONSTRUCTION NOT TO DAMAGE THE PROTECTIVE THROAT AND TOP PLATES.

B. ACTIVATION INCLUDES INSTALLATION OF PLANT(S) AND MULCH LAYERS AS NECESSARY.

INCLUDED MAINTENANCE

A. EACH CORRECTLY INSTALLED FILTERRA UNIT IS TO BE MAINTAINED BY THE SUPPLIER OR A SUPPLIER APPROVED CONTRACTOR FOR A MINIMUM PERIOD OF 1 YEAR. THE COST OF THIS SERVICE IS TO BE INCLUDED IN THE PRICE OF EACH FILTERRA UNIT.

B. ANNUAL INCLUDED MAINTENANCE CONSISTS OF A MAXIMUM OF (2) SCHEDULED VISITS. THE VISITS AREA SCHEDULED SEASONALLY: THE SPRING VISIT AIMS TO CLEAN UP AFTER WINTER LOADS THAT MAY INCLUDE SALTS AND SANDS. THE FALL VISIT HELPS THE SYSTEM BY REMOVING EXCESSIVE LEAF LITTER.

C. EACH INCLUDED MAINTENANCE VISIT CONSISTS OF THE FOLLOWING TASKS:

1. FILTERRA UNIT INSPECTION
2. FOREIGN DEBRIS, SILT, MULCH AND TRASH REMOVAL
3. FILTER MEDIA EVALUATION AND RECHARGE AS NECESSARY
4. PLANT HEALTH EVALUATION AND PRUNING OR REPLACEMENT AS NECESSARY
5. REPLACEMENT OF MULCH
6. DISPOSAL OF ALL MAINTENANCE REFUSE ITEMS
7. MAINTENANCE RECORDS UPDATED AND STORED (REPORTS AVAILABLE UPON REQUEST)

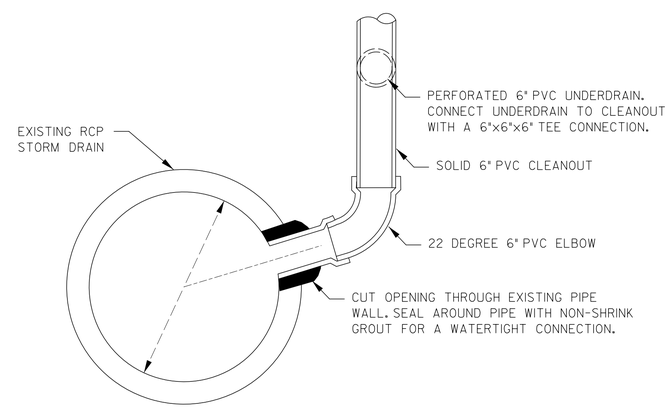

NOTE:
REFER TO PLAN SHEETS FOR ELEVATION OF PIPE CONNECTION. CONNECTION SHOULD BE ABOVE THE FLOWLINE OF THE EXISITNG RCP STORM DRAIN.

UNDERDRAIN TO EX. PIPE CONNECTION DETAIL

N.T.S.

McCormick Taylor
Engineers & Planners Since 1946
509 South Exeter Street
4th Floor
Baltimore, Maryland 21202
(410) 662-7400

STORMWATER MANAGEMENT DETAILS

FRANKLIN KNOLLS-PHASE 4

SLIGO (13th) ELECTION DISTRICT

PARCEL X, SUBDIVISION X, LIBER X FOLIO X

MONTGOMERY COUNTY, MARYLAND

CLIENT: MONTGOMERY COUNTY DEPT OF ENVIRONMENTAL PROTECTION
255 ROCKVILLE PIKE, RM. 120
ROCKVILLE, MD 20850-4166
MR. PAUL BOGLE, P.E.
(240) 777-7757

DESIGN	KCS
DRAFT	WJW
APPROVED	HJD
DATE	JUNE 2014
SCALE	NOT TO SCALE

SHEET 11 OF 52

FILE: I:\5152\13 - Roadway LID - Forest Estates and the Four Corners Area\Design\Engineering\PlanSet\FK P4\pDE-D004_FK4.dgn
PLOTTED: Thursday, June 05, 2014 AT 02:46 PM

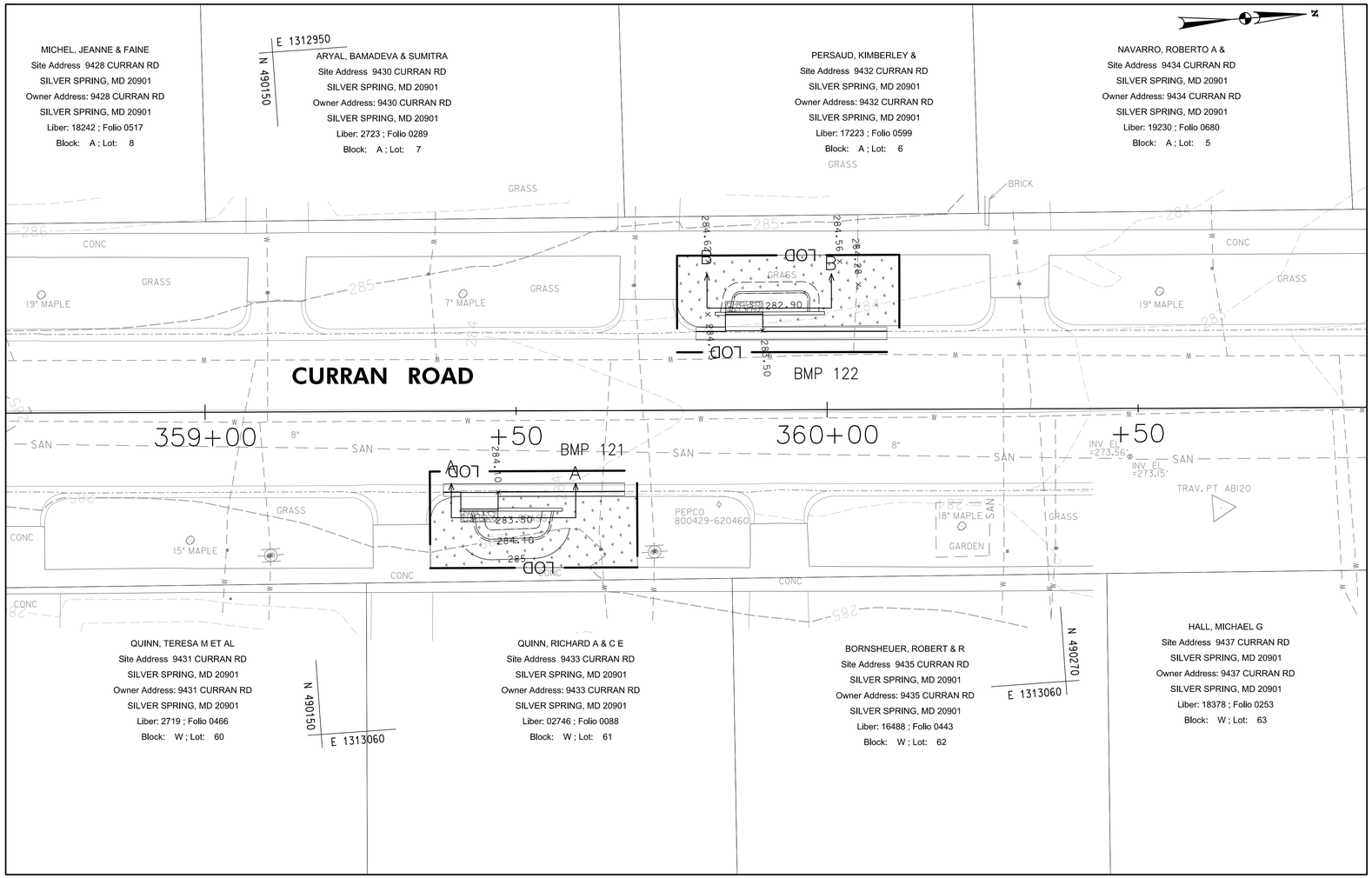

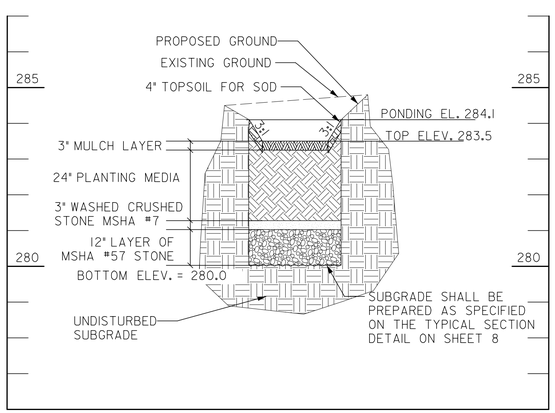

PROFILE (A-A) - RAIN GARDEN FACILITY (BMP 121)

SCALE: HORIZ. 1"=10'
VERT. 1"=2'

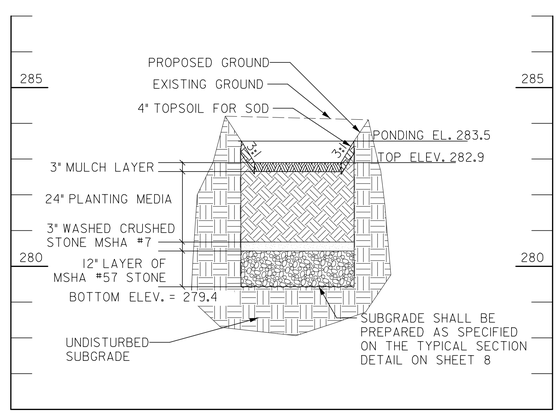

PROFILE (B-B) - RAIN GARDEN FACILITY (BMP 122)

SCALE: HORIZ. 1"=10'
VERT. 1"=2'

AS-BUILT DATA FOR FILTERS (BIORETENTION/RAIN GARDENS)

*TO BE COMPLETED BY THE CERTIFYING ENGINEER

TYPE OF FACILITY: RAIN GARDEN — BMP ID: BMP 121

FEATURE	DESIGN	*AS-BUILT
DRAINAGE AREA (AC)	0.24	
TOTAL IMPERVIOUS AREA (AC)	0.10	
TREATMENT VOLUME PROVIDED (CF)	69	
TARGET WQv TREATMENT VOLUME (CF)	372	
FILTER BED AREA (SF) [1]	26	
FILTER BED SURFACE ELEVATION	283.50	
DESIGN POINT/MAX. PONDING ELEVATION	284.10	
PONDED WATER SURFACE ELEVATION AREA (SF) [2]	56	
OUTLET PIPE (UNDERDRAIN) SIZE / INVERT ELEV.	N / A	
THICKNESS OF FILTER MEDIA	REFER TO PROFILE	
PLACEMENT OF GEOTEXTILE (SIDES ONLY)	REFER TO FACILITY TYP. SECTION – SHEET 9	
PLANTINGS	REFER TO LANDSCAPE PLAN – SHEET 52	
COMPOSITION OF FILTER MEDIA	REFER TO MCDEP SPECIFICATIONS	

*NOTES:

1. "FILTER BED AREA (SF)" REPRESENTS THE EXPOSED SURFACE AREA AT THE PROPOSED "FILTER BED SURFACE ELEVATION".
2. FOR MATERIAL QUANTITY ESTIMATIONS, THE PLANTING MEDIA, STONE, MULCH, ETC. SHOULD BE BASED ON THE AREA OF "PONDED WATER SURFACE ELEVATION AREA (SF)".
3. CONTRACTOR SHALL TEST PIT UTILITIES PRIOR TO CONSTRUCTION. IF UTILITY IS UNAVOIDABLE, CONTRACTOR SHALL REFER TO SHEET 8 FOR UTILITY CROSSING DETAIL WITHIN THE FACILITY.

AS-BUILT DATA FOR FILTERS (BIORETENTION/RAIN GARDENS)

*TO BE COMPLETED BY THE CERTIFYING ENGINEER

TYPE OF FACILITY: RAIN GARDEN — BMP ID: BMP 122

FEATURE	DESIGN	*AS-BUILT
DRAINAGE AREA (AC)	1.26	
TOTAL IMPERVIOUS AREA (AC)	0.20	
TREATMENT VOLUME PROVIDED (CF)	90	
TARGET WQv TREATMENT VOLUME (CF)	882	
FILTER BED AREA (SF) [1]	36	
FILTER BED SURFACE ELEVATION	282.90	
DESIGN POINT/MAX. PONDING ELEVATION	283.50	
PONDED WATER SURFACE ELEVATION AREA (SF) [2]	72	
OUTLET PIPE (UNDERDRAIN) SIZE / INVERT ELEV.	N / A	
THICKNESS OF FILTER MEDIA	REFER TO PROFILE	
PLACEMENT OF GEOTEXTILE (SIDES ONLY)	REFER TO FACILITY TYP. SECTION – SHEET 9	
PLANTINGS	REFER TO LANDSCAPE PLAN – SHEET 52	
COMPOSITION OF FILTER MEDIA	REFER TO MCDEP SPECIFICATIONS	

COMBINATION CONC. CURB AND GUTTER

STA. TO STA.	L.F.	REMARKS
359+38, RT TO 359+41, RT	3	TYPE A, MC.100.01
359+47, RT TO 359+57, RT	10	TYPE A, MC.100.01
359+57, RT TO 359+67, RT	10	TRANSITION TYPE A TO TYPE C
359+79, LT TO 359+84, LT	5	TYPE A, MC.100.01
359+90, LT TO 360+00, LT	10	TYPE A, MC.100.01
360+00, LT TO 360+10, LT	10	TRANSITION TYPE A TO TYPE C

10' 0 10' 20'
SCALE: 1"=10'

McCormick Taylor
Engineers & Planners
Since 1946
509 South Exater Street
4th Floor
Baltimore, Maryland 21202
(410) 662-7400

PLAN AND PROFILE - BMP 121 & 122

FRANKLIN KNOLLS-PHASE 4

SUGO (13th) ELECTION DISTRICT

PARCEL X, SUBDIVISION X, LIBER X FOLIO X

MONTGOMERY COUNTY, MARYLAND

CLIENT: MONTGOMERY COUNTY DEPT OF ENVIRONMENTAL PROTECTION
255 ROCKVILLE PIKE, RM. 120
ROCKVILLE, MD 20850-4166
MR. PAUL BOGLE, P.E.
(240) 777-7757

DESIGN	KCS		
DRAFT	WJW		
APPROVED	HJD	DATE	JUNE 2014
		SCALE	1"=10'

SHEET 12 OF 52

FILE: 13518213 -Roadway LID – Forest Estates and the Four Corners Area\Design\Engineering\Plan\Sid\FK Pkg\HD-P002_FK4_BMP-121_122.dgn
PLOTTED: Thursday, June 05, 2014 AT 02:46 PM

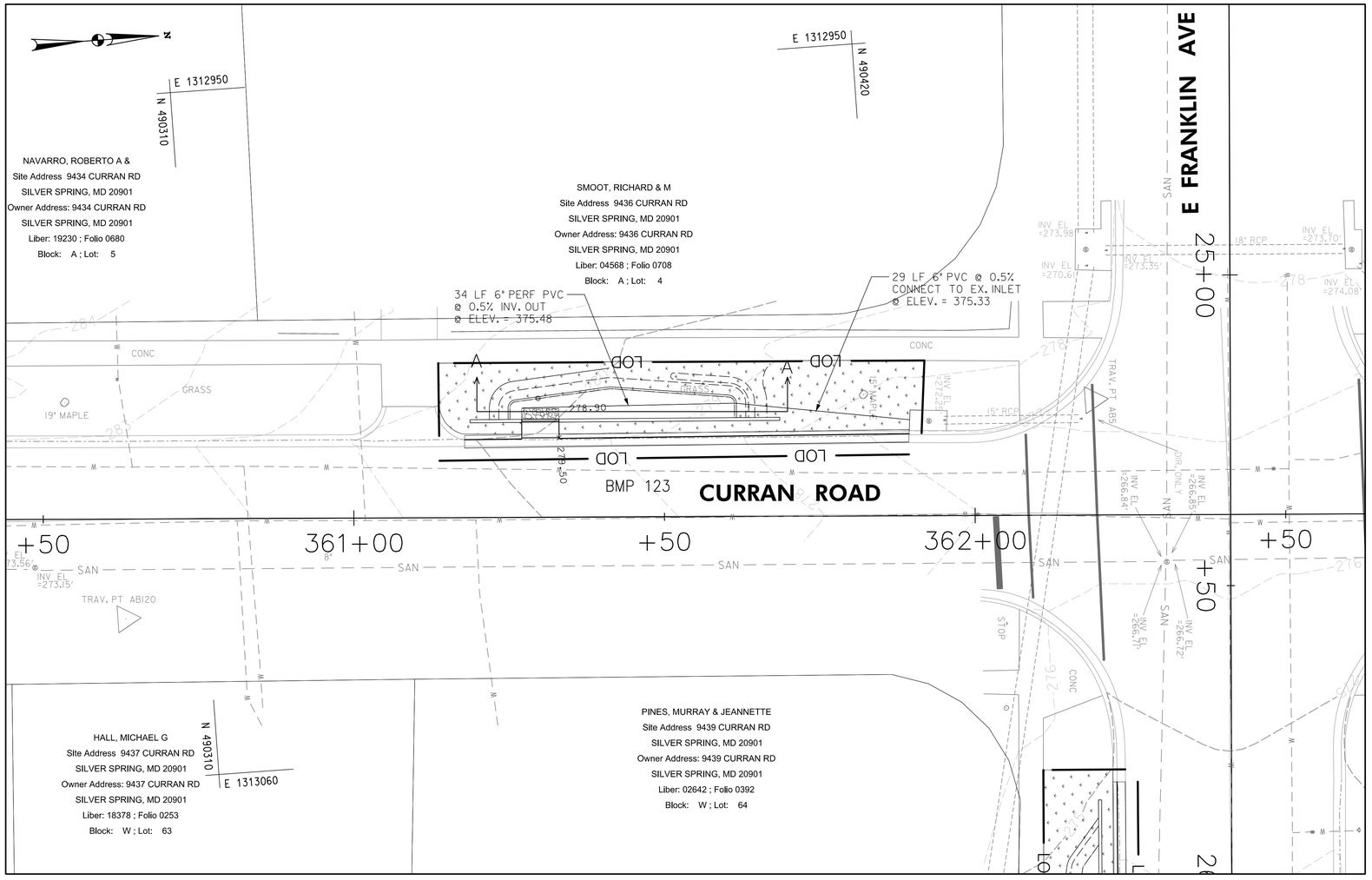

AS-BUILT DATA FOR FILTERS (BIORETENTION/RAIN GARDENS)

*TO BE COMPLETED BY THE CERTIFYING ENGINEER

TYPE OF FACILITY: BIORETENTION **BMP ID:** BMP 123

FEATURE	DESIGN	*AS-BUILT
DRAINAGE AREA (AC)	1.26	
TOTAL IMPERVIOUS AREA (AC)	0.17	
TREATMENT VOLUME PROVIDED (CF)	285	
TARGET WQv TREATMENT VOLUME (CF)	784	
FILTER BED AREA (SF) [1]	141	
FILTER BED SURFACE ELEVATION	287.90	
DESIGN POINT/MAX. PONDING ELEVATION	288.50	
PONDED WATER SURFACE ELEVATION AREA (SF) [2]	221	
OUTLET PIPE (UNDERDRAIN) SIZE / INVERT ELEV.	6" / 375.33	
THICKNESS OF FILTER MEDIA	REFER TO PROFILE	
PLACEMENT OF GEOTEXTILE (SIDES ONLY)	REFER TO FACILITY TYP. SECTION – SHEET 9	
PLANTINGS	REFER TO LANDSCAPE PLAN – SHEET 52	
COMPOSITION OF FILTER MEDIA	REFER TO MCDEP SPECIFICATIONS	

*NOTES:

1. "FILTER BED AREA (SF)" REPRESENTS THE EXPOSED SURFACE AREA AT THE PROPOSED "FILTER BED SURFACE ELEVATION".
2. FOR MATERIAL QUANTITY ESTIMATIONS, THE PLANTING MEDIA, STONE, MULCH, ETC. SHOULD BE BASED ON THE AREA OF "PONDED WATER SURFACE ELEVATION AREA (SF)".
3. CONTRACTOR SHALL TEST PIT UTILITIES PRIOR TO CONSTRUCTION. IF UTILITY IS UNAVOIDABLE, CONTRACTOR SHALL REFER TO SHEET 8 FOR UTILITY CROSSING DETAIL WITHIN THE FACILITY.

COMBINATION CONC. CURB AND GUTTER

STA. TO STA.	L.F.	REMARKS
361+18, LT TO 361+27, LT	4	TYPE A, MC.100.01
361+33, LT TO 361+89, LT	26	TYPE A, MC.100.01

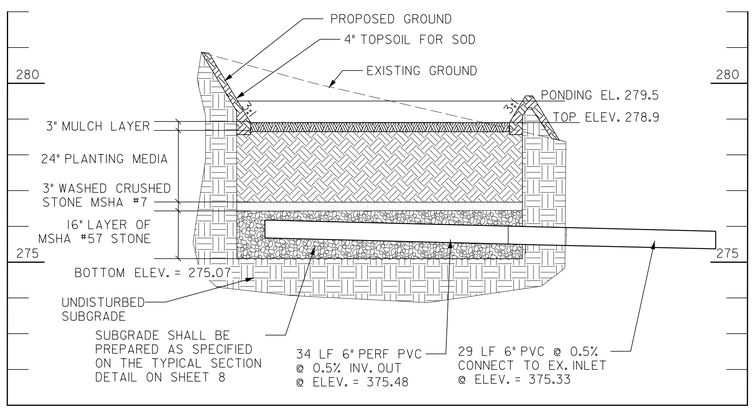

PROFILE (A-A) - BIORETENTION FACILITY (BMP 123)

SCALE: HORIZ. 1"=10'
VERT. 1"=2'

10' 0 10' 20'
SCALE: 1"=10'

McCormick Taylor
Engineers & Planners Since 1946
509 South Exeter Street
4th Floor
Baltimore, Maryland 21202
(410) 662-7400

PLAN AND PROFILE - BMP 123
FRANKLIN KNOLLS-PHASE 4
SLIGO (13th) ELECTION DISTRICT
PARCEL X, SUBDIVISION X, LIBER X FOLIO X
MONTGOMERY COUNTY, MARYLAND

CLIENT: MONTGOMERY COUNTY DEPT OF ENVIRONMENTAL PROTECTION
255 ROCKVILLE PIKE, RM. 120
ROCKVILLE, MD 20850-4166
MR. PAUL BOGLE, P.E.
(240) 777-7757

DESIGN	KCS
DRAFT	WJW
APPROVED	HJD
DATE	JUNE 2014
SCALE	1"=10'

SHEET 13 OF 52

FILE: I:\5192\13 - Roadway LID - Forest Estates and the Four Corners Area\Design\Engineering\PlanSet\FK P4\grd\D-P003_FK4_BMP-123.dgn
PLOTTED: Thursday, June 05, 2014 AT 02:46 PM

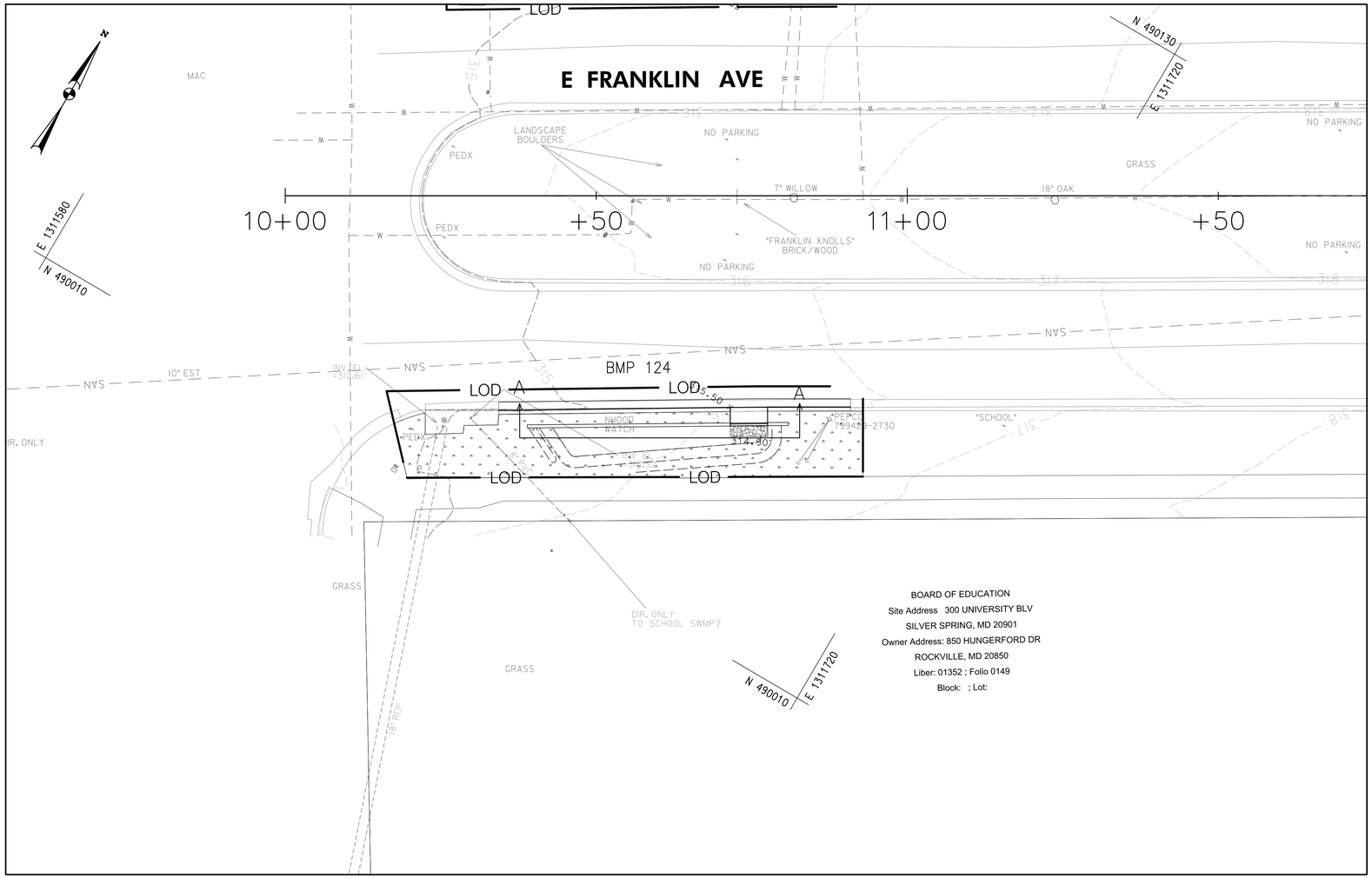

BOARD OF EDUCATION
Site Address 300 UNIVERSITY BLV
SILVER SPRING, MD 20901
Owner Address: 850 HUNGERFORD DR
ROCKVILLE, MD 20850
Liber: 01352 ; Folio 0149
Block: ; Lot:

AS-BUILT DATA FOR FILTERS (BIORETENTION/RAIN GARDENS)

*TO BE COMPLETED BY THE CERTIFYING ENGINEER

TYPE OF FACILITY: RAIN GARDEN BMP ID: BMP 124

FEATURE	DESIGN	*AS-BUILT
DRAINAGE AREA (AC)	0.54	
TOTAL IMPERVIOUS AREA (AC)	0.21	
TREATMENT VOLUME PROVIDED (CF)	248	
TARGET WQv TREATMENT VOLUME (CF)	784	
FILTER BED AREA (SF) [1]	118	
FILTER BED SURFACE ELEVATION	314.90	
DESIGN POINT/MAX. PONDING ELEVATION	315.50	
PONDED WATER SURFACE ELEVATION AREA (SF) [2]	193	
OUTLET PIPE (UNDERDRAIN) SIZE / INVERT ELEV.	N / A	
THICKNESS OF FILTER MEDIA	REFER TO PROFILE	
PLACEMENT OF GEOTEXTILE (SIDES ONLY)	REFER TO FACILITY TYP. SECTION – SHEET 9	
PLANTINGS	REFER TO LANDSCAPE PLAN – SHEET 52	
COMPOSITION OF FILTER MEDIA	REFER TO MCDEP SPECIFICATIONS	

*NOTES:
1. "FILTER BED AREA (SF)" REPRESENTS THE EXPOSED SURFACE AREA AT THE PROPOSED "FILTER BED SURFACE ELEVATION".
2. FOR MATERIAL QUANTITY ESTIMATIONS, THE PLANTING MEDIA, STONE, MULCH, ETC. SHOULD BE BASED ON THE AREA OF "PONDED WATER SURFACE ELEVATION AREA (SF)".
3. CONTRACTOR SHALL TEST PIT UTILITIES PRIOR TO CONSTRUCTION. IF UTILITY IS UNAVOIDABLE, CONTRACTOR SHALL REFER TO SHEET 8 FOR UTILITY CROSSING DETAIL WITHIN THE FACILITY.

COMBINATION CONC. CURB AND GUTTER

STA. TO STA.	L.F.	REMARKS
10+34, RT TO 10+72, RT	37	TYPE A, MC.100.01
10+78, RT TO 10+81, RT	3	TYPE A, MC.100.01
10+81, RT TO 10+91, RT	10	TRANSITION TYPE A TO TYPE C

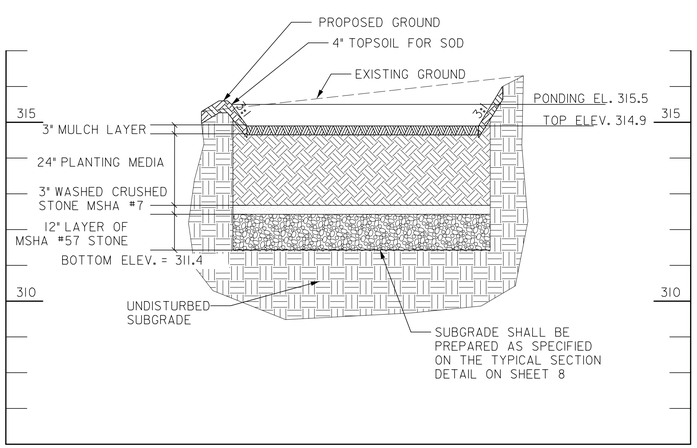

PROFILE (A-A) - RAIN GARDEN FACILITY (BMP 124)

SCALE: HORIZ. 1"=10'
VERT. 1"=2'

10' 0 10' 20'
SCALE: 1"=10'

McCormick Taylor
Engineers & Planners Since 1946
509 South Exeter Street
4th Floor
Baltimore, Maryland 21202
(410) 662-7400

PLAN AND PROFILE - BMP 124
FRANKLIN KNOLLS-PHASE 4
SLIGO (13th) ELECTION DISTRICT
PARCEL X, SUBDIVISION X, LIBER X FOLIO X
MONTGOMERY COUNTY, MARYLAND

CLIENT: MONTGOMERY COUNTY DEPT OF ENVIRONMENTAL PROTECTION
255 ROCKVILLE PIKE, RM. 120
ROCKVILLE, MD 20850-4166
MR. PAUL BOGLE, P.E.
(240) 777-7757

DESIGN	KCS
DRAFT	WJW
APPROVED	HJD
DATE	JUNE 2014
SCALE	1"=10'

SHEET 14 OF 52

FILE: I:\31\32\13 - Roadway LID – Forest Estates and the Four Corners Area\Design\Engineering\PlanSet\FK Ph\pHD-P004_FK4_BMP-124.dgn
PLOTTED: Thursday, June 05, 2014 AT 02:46 PM

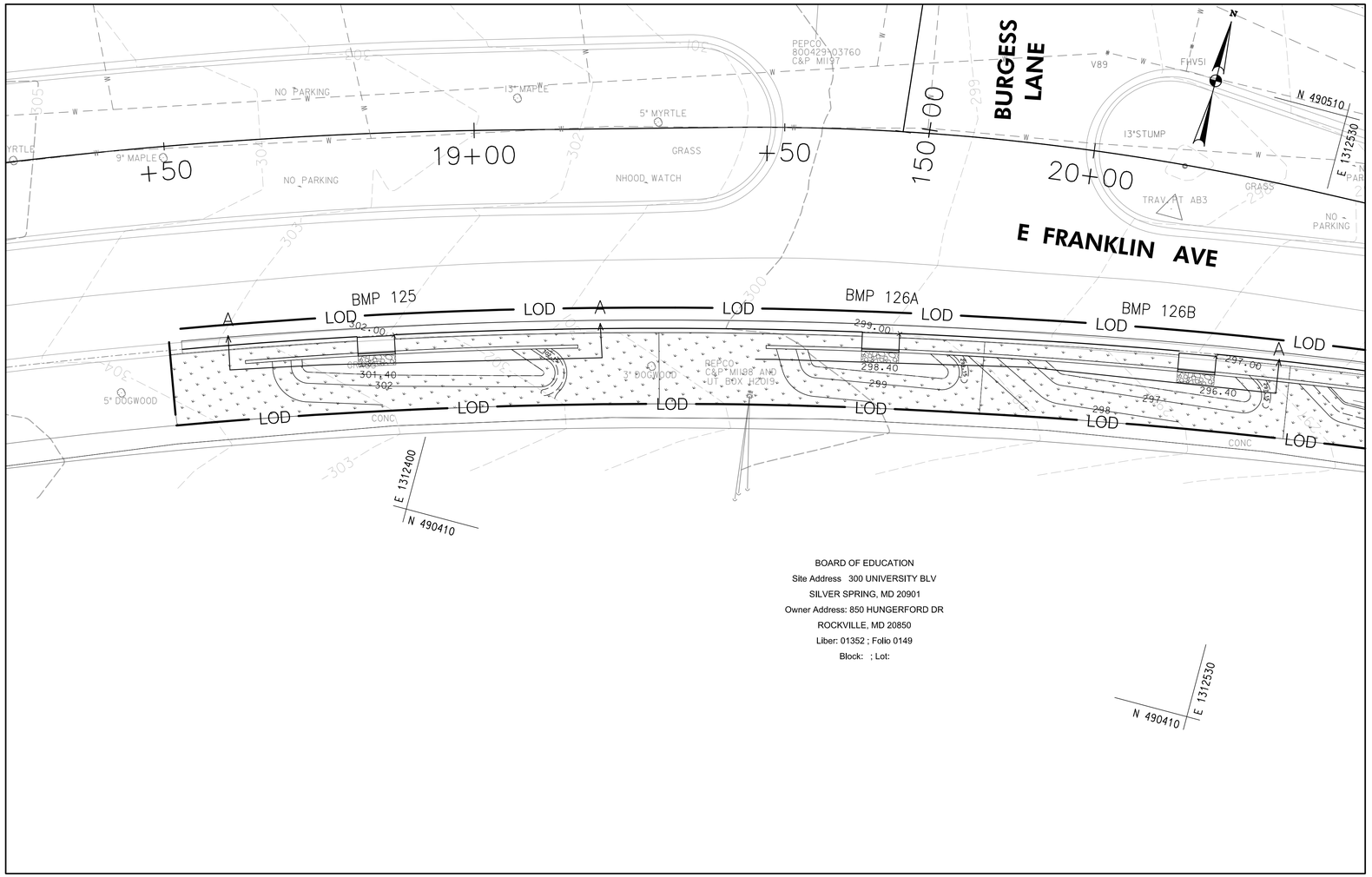

BOARD OF EDUCATION
Site Address 300 UNIVERSITY BLV
SILVER SPRING, MD 20901
Owner Address: 850 HUNGERFORD DR
ROCKVILLE, MD 20850
Liber: 01352 ; Folio 0149
Block: ; Lot:

AS-BUILT DATA FOR FILTERS (BIORETENTION/RAIN GARDENS)

*TO BE COMPLETED BY THE CERTIFYING ENGINEER

TYPE OF FACILITY: RAIN GARDEN **BMP ID:** BMP 125

FEATURE	DESIGN	*AS-BUILT
DRAINAGE AREA (AC)	0.84	
TOTAL IMPERVIOUS AREA (AC)	0.43	
TREATMENT VOLUME PROVIDED (CF)	274	
TARGET WQv TREATMENT VOLUME (CF)	1,557	
FILTER BED AREA (SF) [1]	126	
FILTER BED SURFACE ELEVATION	301.4	
DESIGN POINT/MAX. PONDING ELEVATION	302	
PONDED WATER SURFACE ELEVATION AREA (SF) [2]	215	
OUTLET PIPE (UNDERDRAIN) SIZE / INVERT ELEV.	xxx	
THICKNESS OF FILTER MEDIA	REFER TO PROFILE	
PLACEMENT OF GEOTEXTILE (SIDES ONLY)	REFER TO FACILITY TYP. SECTION – SHEET 9	
PLANTINGS	REFER TO LANDSCAPE PLAN – SHEET 52	
COMPOSITION OF FILTER MEDIA	REFER TO MCDEP SPECIFICATIONS	

*NOTES:
1. "FILTER BED AREA (SF)" REPRESENTS THE EXPOSED SURFACE AREA AT THE PROPOSED "FILTER BED SURFACE ELEVATION".
2. FOR MATERIAL QUANTITY ESTIMATIONS, THE PLANTING MEDIA, STONE, MULCH, ETC. SHOULD BE BASED ON THE AREA OF "PONDED WATER SURFACE ELEVATION AREA (SF)".
3. CONTRACTOR SHALL TEST PIT UTILITIES PRIOR TO CONSTRUCTION. IF UTILITY IS UNAVOIDABLE, CONTRACTOR SHALL REFER TO SHEET 8 FOR UTILITY CROSSING DETAIL WITHIN THE FACILITY.

COMBINATION CONC. CURB AND GUTTER

STA. TO STA.	L.F.	REMARKS
18+50, RT TO 18+61, RT	10	TRANSITION TYPE A TO TYPE C
18+61, RT TO 18+80, RT	18	TYPE A, MC.100.01
18+86, RT TO 19+64, RT	73	TYPE A, MC.100.01
19+71, RT TO 20+19, RT	41	TYPE A, MC.100.01
20+26, RT TO 20+54, RT	28	TYPE A, MC.100.01

AS-BUILT DATA FOR FILTERS (BIORETENTION/RAIN GARDENS)

*TO BE COMPLETED BY THE CERTIFYING ENGINEER

TYPE OF FACILITY: RAIN GARDEN **BMP ID:** BMP 126A-B (126C SHEET 16)

FEATURE	DESIGN	*AS-BUILT
DRAINAGE AREA (AC)	0.20	
TOTAL IMPERVIOUS AREA (AC)	0.10	
TREATMENT VOLUME PROVIDED (CF)	564	
TARGET WQv TREATMENT VOLUME (CF)	363	
FILTER BED AREA (SF) [1]	162	
FILTER BED SURFACE ELEVATION	296.4, 298.4	
DESIGN POINT/MAX. PONDING ELEVATION	297, 299	
PONDED WATER SURFACE ELEVATION AREA (SF) [2]	293	
OUTLET PIPE (UNDERDRAIN) SIZE / INVERT ELEV.	N / A	
THICKNESS OF FILTER MEDIA	REFER TO PROFILE	
PLACEMENT OF GEOTEXTILE (SIDES ONLY)	REFER TO FACILITY TYP. SECTION – SHEET 9	
PLANTINGS	REFER TO LANDSCAPE PLAN – SHEET 52	
COMPOSITION OF FILTER MEDIA	REFER TO MCDEP SPECIFICATIONS	

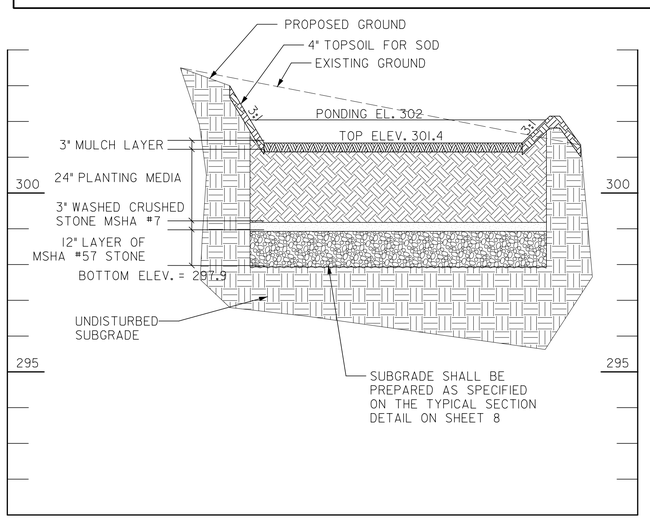

PROFILE (A-A) - RAIN GARDEN FACILITY (BMP 125)

SCALE: HORIZ. 1"=10'
VERT. 1"=2'

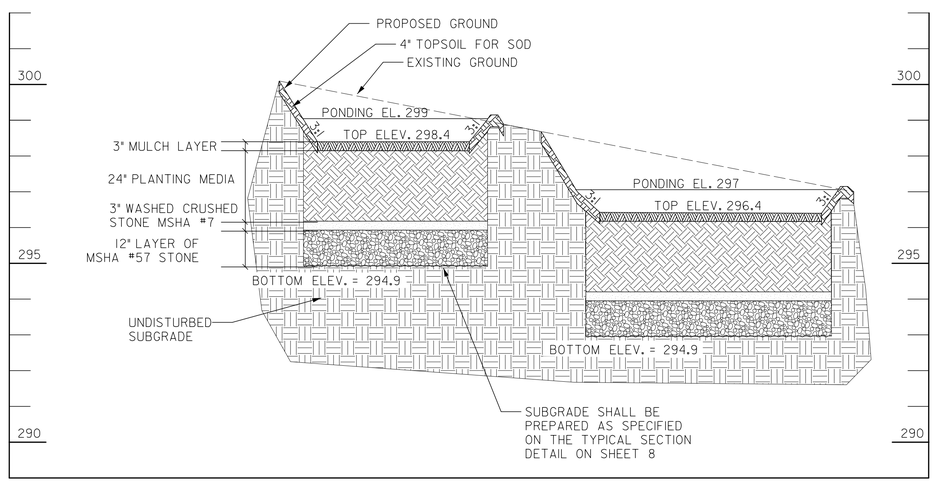

PROFILE (B-B) - RAIN GARDEN FACILITY (BMP 126A-B)

SCALE: HORIZ. 1"=10'
VERT. 1"=2'

10' 0 10' 20'
SCALE: 1"=10'

McCormick Taylor
Engineers & Planners Since 1946
509 South Exeter Street
4th Floor
Baltimore, Maryland 21202
(410) 662-7400

PLAN AND PROFILE - BMP 125, 126A & 126B

FRANKLIN KNOLLS-PHASE 4
SLIGO (13th) ELECTION DISTRICT
PARCEL X, SUBDIVISION X, LIBER X FOLIO X
MONTGOMERY COUNTY, MARYLAND

CLIENT: MONTGOMERY COUNTY DEPT OF ENVIRONMENTAL PROTECTION
255 ROCKVILLE PIKE, RM. 120
ROCKVILLE, MD 20850-4166
MR. PAUL BOGLE, P.E.
(240) 777-7757

DESIGN	KCS
DRAFT	WJW
APPROVED	HJD
DATE	JUNE 2014
SCALE	1"=10'

SHEET 15 OF 52

FILE: I:\53182\13 - Roadway LID – Forest Estates and the Four Corners Area\Design\Engineering\PlanSet\FK Ph4\HD-P006_FK4_BMP-125_126A-B.dgn
PLOTTED: Thursday, June 05, 2014 AT 02:46 PM

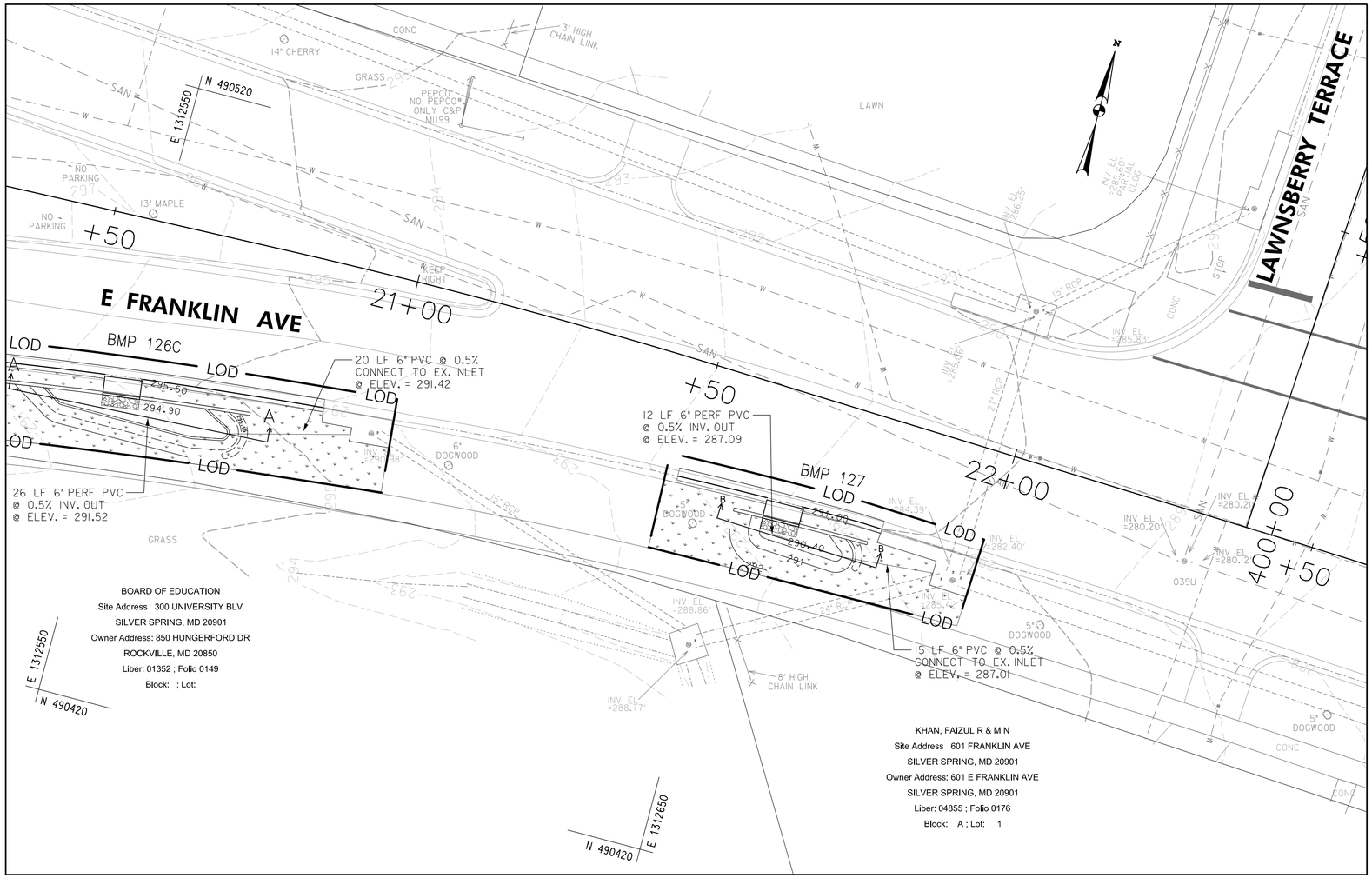

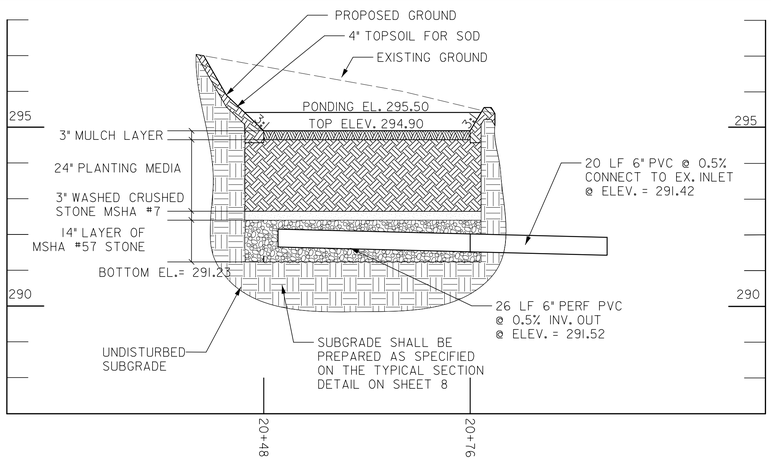

PROFILE (A-A) - RAIN GARDEN FACILITY (BMP 126C)

SCALE: HORIZ. 1"=10'
VERT. 1"=2'

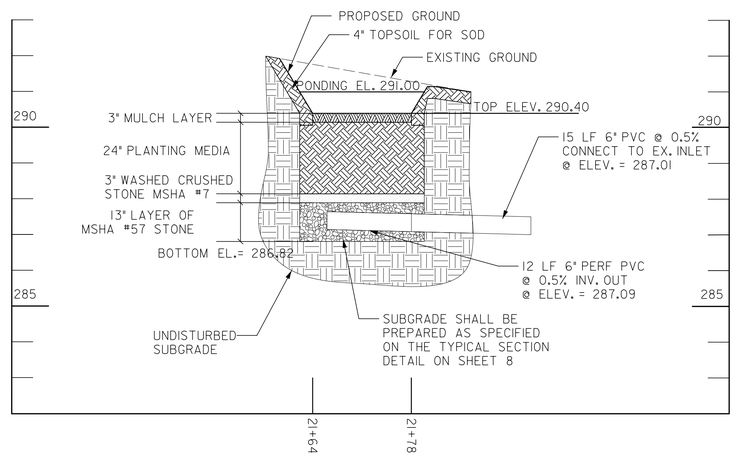

PROFILE (B-B) - BIORETENTION FACILITY (BMP 127)

SCALE: HORIZ. 1"=10'
VERT. 1"=2'

AS-BUILT DATA FOR FILTERS (BIORETENTION/RAIN GARDENS)

*TO BE COMPLETED BY THE CERTIFYING ENGINEER

TYPE OF FACILITY: BIORETENTION BMP ID: BMP 127

FEATURE	DESIGN	*AS-BUILT
DRAINAGE AREA (AC)	0.09	
TOTAL IMPERVIOUS AREA (AC)	0.05	
TREATMENT VOLUME PROVIDED (CF)	110	
TARGET WQv TREATMENT VOLUME (CF)	180	
FILTER BED AREA (SF) [1]	45	
FILTER BED SURFACE ELEVATION	290.40	
DESIGN POINT/MAX. PONDING ELEVATION	291.00	
PONDED WATER SURFACE ELEVATION AREA (SF) [2]	88	
OUTLET PIPE (UNDERDRAIN) SIZE / INVERT ELEV.	6" / 287.01	
THICKNESS OF FILTER MEDIA	REFER TO PROFILE	
PLACEMENT OF GEOTEXTILE (SIDES ONLY)	REFER TO FACILITY TYP. SECTION – SHEET 9	
PLANTINGS	REFER TO LANDSCAPE PLAN – SHEET 52	
COMPOSITION OF FILTER MEDIA	REFER TO MCDEP SPECIFICATIONS	

*NOTES:

1. "FILTER BED AREA (SF)" REPRESENTS THE EXPOSED SURFACE AREA AT THE PROPOSED "FILTER BED SURFACE ELEVATION".
2. FOR MATERIAL QUANTITY ESTIMATIONS, THE PLANTING MEDIA, STONE, MULCH, ETC. SHOULD BE BASED ON THE AREA OF "PONDED WATER SURFACE ELEVATION AREA (SF)".
3. CONTRACTOR SHALL TEST PIT UTILITIES PRIOR TO CONSTRUCTION. IF UTILITY IS UNAVOIDABLE, CONTRACTOR SHALL REFER TO SHEET 8 FOR UTILITY CROSSING DETAIL WITHIN THE FACILITY.

COMBINATION CONC. CURB AND GUTTER

STA. TO STA.	L.F.	REMARKS
20+60, RT TO 20+92, RT	30	TYPE A, MC.100.01
21+49, RT TO 21+59, RT	10	TRANSITION TYPE A TO TYPE C
21+59, RT TO 21+64, RT	5	TYPE A, MC.100.01
21+70, RT TO 21+83, RT	13	TYPE A, MC.100.01

AS-BUILT DATA FOR FILTERS (BIORETENTION/RAIN GARDENS)

*TO BE COMPLETED BY THE CERTIFYING ENGINEER

TYPE OF FACILITY: BIORETENTION BMP ID: BMP 126C (126A-B SHEET 15)

FEATURE	DESIGN	*AS-BUILT
DRAINAGE AREA (AC)	SEE SHEET 11	
TOTAL IMPERVIOUS AREA (AC)	SEE SHEET 11	
TREATMENT VOLUME PROVIDED (CF)	SEE SHEET 11	
TARGET WQv TREATMENT VOLUME (CF)	SEE SHEET 11	
FILTER BED AREA (SF) [1]	98	
FILTER BED SURFACE ELEVATION	294.90	
DESIGN POINT/MAX. PONDING ELEVATION	295.40	
PONDED WATER SURFACE ELEVATION AREA (SF) [2]	169	
OUTLET PIPE (UNDERDRAIN) SIZE / INVERT ELEV.	6" / 291.42	
THICKNESS OF FILTER MEDIA	REFER TO PROFILE	
PLACEMENT OF GEOTEXTILE (SIDES ONLY)	REFER TO FACILITY TYP. SECTION – SHEET 9	
PLANTINGS	REFER TO LANDSCAPE PLAN – SHEET 52	
COMPOSITION OF FILTER MEDIA	REFER TO MCDEP SPECIFICATIONS	

10' 0 10' 20'
SCALE: 1"=10'

McCormick Taylor
Engineers & Planners Since 1946
509 South Exater Street
4th Floor
Baltimore, Maryland 21202
(410) 662-7400

PLAN AND PROFILE - BMP 126C & 127

FRANKLIN KNOLLS-PHASE 4

SLIGO (13th) ELECTION DISTRICT

PARCEL X, SUBDIVISION X, LIBER X FOLIO X

MONTGOMERY COUNTY, MARYLAND

CLIENT: MONTGOMERY COUNTY DEPT OF ENVIRONMENTAL PROTECTION
255 ROCKVILLE PIKE, RM. 120
ROCKVILLE, MD 20850-4166
MR. PAUL BOGLE, P.E.
(240) 777-7757

DESIGN	KCS
DRAFT	WJW
APPROVED	HJD
DATE	JUNE 2014
SCALE	1"=10'

SHEET 16 OF 52

FILE: I:\5192\13 - Roadway LID - Forest Estates and the Four Corners Area\Design\Engineering\PlanSet\FK P4\pH3-P907_FK4_BMP-126C_127.dgn
PLOTTED: Thursday, June 05, 2014 AT 02:46 PM

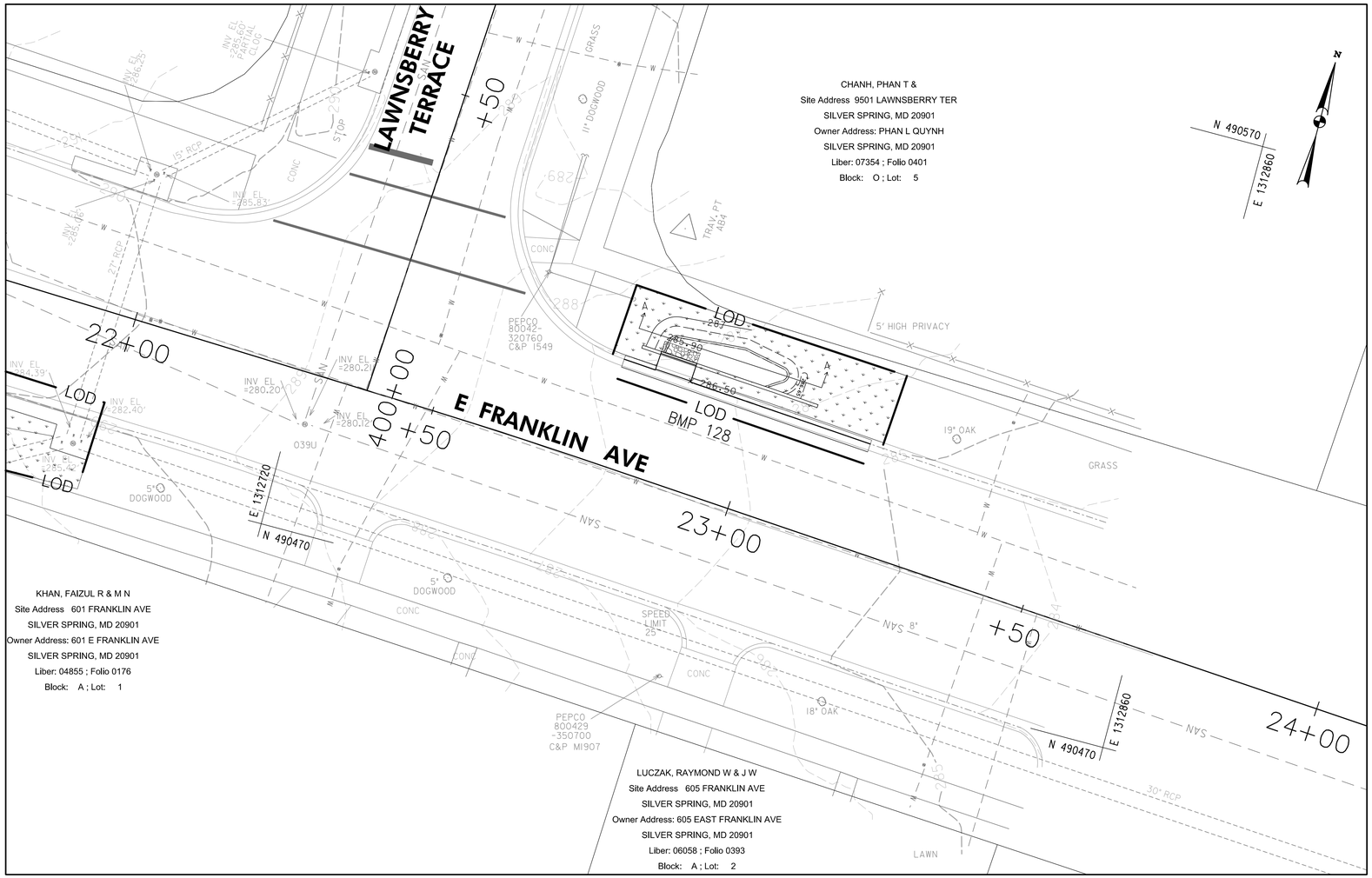

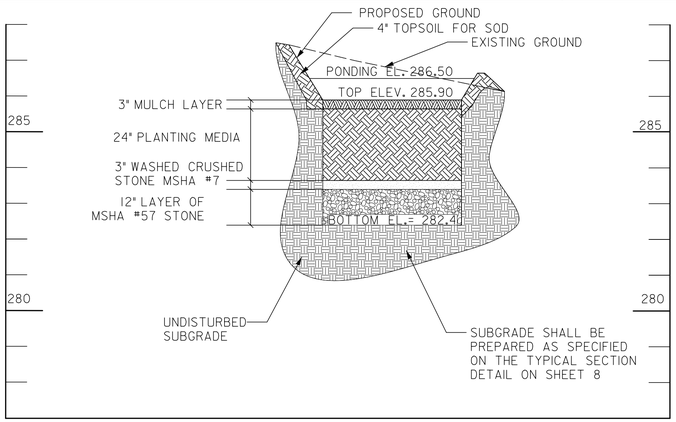

PROFILE (A-A) - RAIN GARDEN FACILITY (BMP 128)

SCALE: HORIZ. 1"=10'
VERT. 1"=2'

AS-BUILT DATA FOR FILTERS (BIORETENTION/RAIN GARDENS)

*TO BE COMPLETED BY THE CERTIFYING ENGINEER

TYPE OF FACILITY: RAIN GARDEN BMP ID: BMP 128

FEATURE	DESIGN	*AS-BUILT
DRAINAGE AREA (AC)	0.65	
TOTAL IMPERVIOUS AREA (AC)	0.31	
TREATMENT VOLUME PROVIDED (CF)	158	
TARGET WQv TREATMENT VOLUME (CF)	1,131	
FILTER BED AREA (SF) [1]	72	
FILTER BED SURFACE ELEVATION	285.90	
DESIGN POINT/MAX. PONDING ELEVATION	286.50	
PONDED WATER SURFACE ELEVATION AREA (SF) [2]	124	
OUTLET PIPE (UNDERDRAIN) SIZE / INVERT ELEV.	N / A	
THICKNESS OF FILTER MEDIA	REFER TO PROFILE	
PLACEMENT OF GEOTEXTILE (SIDES ONLY)	REFER TO FACILITY TYP. SECTION – SHEET 9	
PLANTINGS	REFER TO LANDSCAPE PLAN – SHEET 52	
COMPOSITION OF FILTER MEDIA	REFER TO MCDEP SPECIFICATIONS	

*NOTES:

1. "FILTER BED AREA (SF)" REPRESENTS THE EXPOSED SURFACE AREA AT THE PROPOSED "FILTER BED SURFACE ELEVATION".
2. FOR MATERIAL QUANTITY ESTIMATIONS, THE PLANTING MEDIA, STONE, MULCH, ETC. SHOULD BE BASED ON THE AREA OF "PONDED WATER SURFACE ELEVATION AREA (SF)".
3. CONTRACTOR SHALL TEST PIT UTILITIES PRIOR TO CONSTRUCTION. IF UTILITY IS UNAVOIDABLE, CONTRACTOR SHALL REFER TO SHEET 8 FOR UTILITY CROSSING DETAIL WITHIN THE FACILITY.

COMBINATION CONC. CURB AND GUTTER

STA. TO STA.	L.F.	REMARKS
22+77, LT TO 22+82, LT	5	TYPE A, MC.100.01
22+88, LT TO 23+08, LT	19	TYPE A, MC.100.01
23+08, LT TO 23+18, LT	10	TRANSITION TYPE A TO TYPE C

10' 0 10' 20'
SCALE: 1"=10'

McCormick Taylor
Engineers & Planners Since 1946
509 South Exeter Street
4th Floor
Baltimore, Maryland 21202
(410) 662-7400

PLAN AND PROFILE - BMP 128

FRANKLIN KNOLLS-PHASE 4

SLIGO (13th) ELECTION DISTRICT

PARCEL X, SUBDIVISION X, LIBER X FOLIO X

MONTGOMERY COUNTY, MARYLAND

CLIENT: MONTGOMERY COUNTY DEPT OF ENVIRONMENTAL PROTECTION
255 ROCKVILLE PIKE, RM. 120
ROCKVILLE, MD 20850-4166
MR. PAUL BOGLE, P.E.
(240) 777-7757

DESIGN	KCS
DRAFT	WJW
APPROVED	HJD
DATE	JUNE 2014
SCALE	1"=10'

SHEET 17 OF 52

FILE: I:\15182\13 - Roadway LID – Forest Estates and the Four Corners Area\Design\Engineering\PlanSet\FK P4\pnID-P002_FK4_BMP-128.dgn
PLOTTED: Thursday, June 05, 2014 AT 02:46 PM

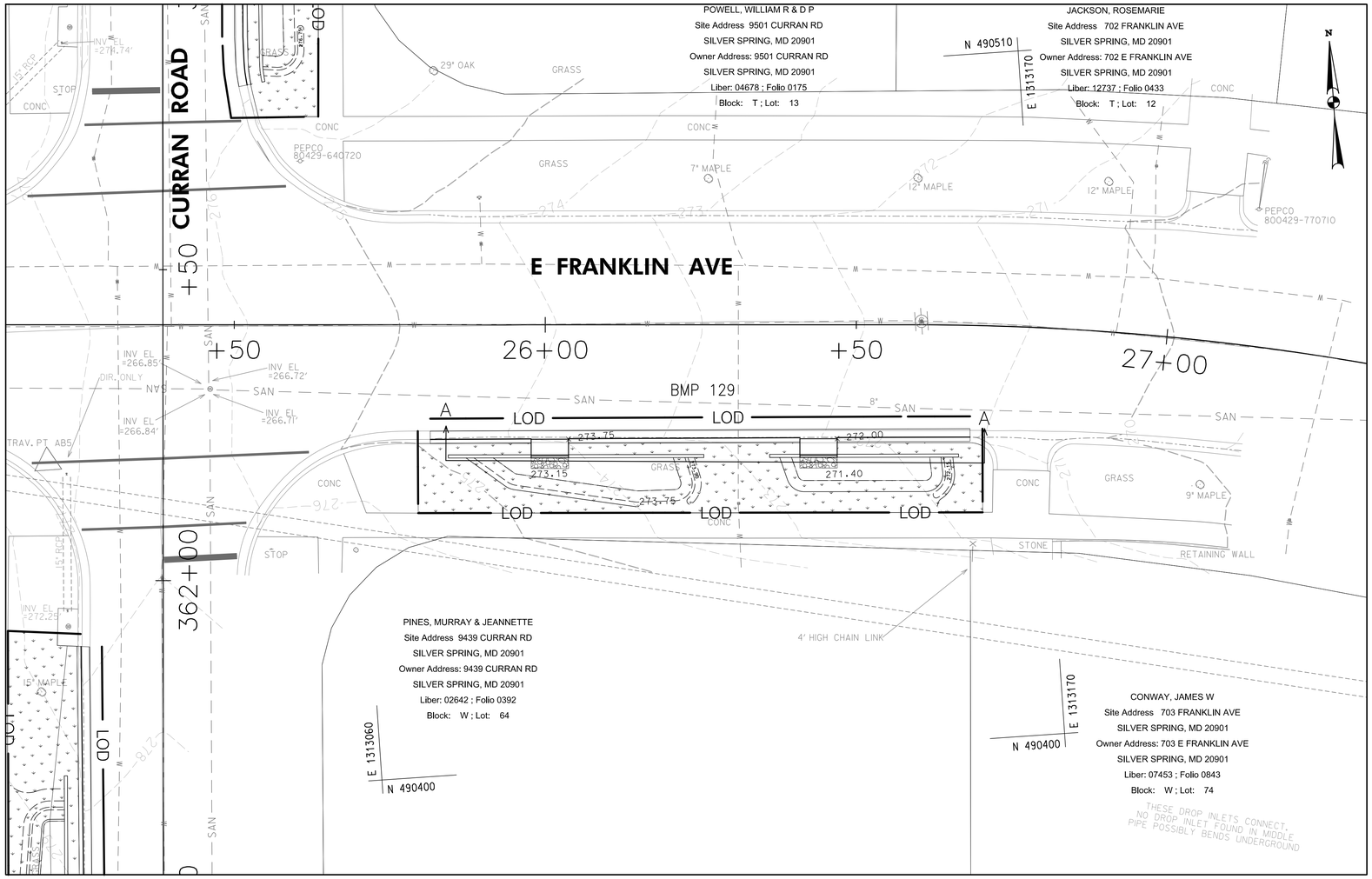

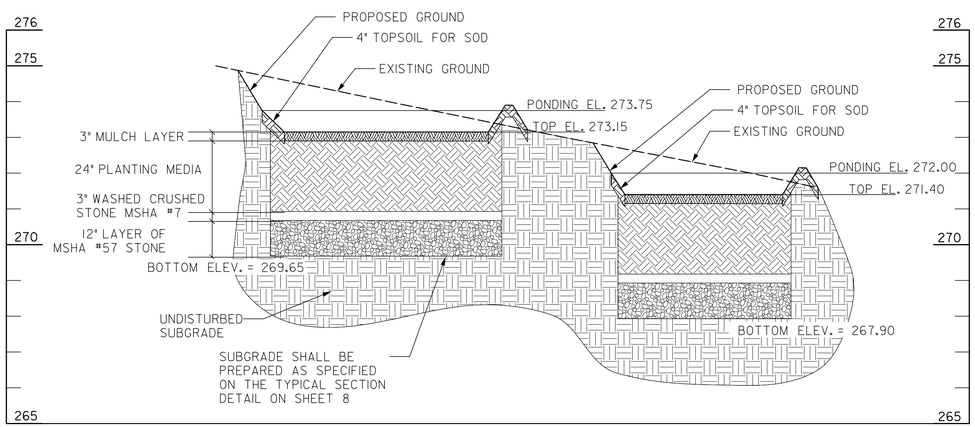

PROFILE (A-A) - RAIN GARDEN FACILITY (BMP 129)

SCALE: HORIZ. 1"=10'
VERT. 1"=2'

AS-BUILT DATA FOR FILTERS (BIORETENTION/RAIN GARDENS)

*TO BE COMPLETED BY THE CERTIFYING ENGINEER

TYPE OF FACILITY: RAIN GARDEN — BMP ID: BMP 129

FEATURE	DESIGN	*AS-BUILT
DRAINAGE AREA (AC)	0.58	
TOTAL IMPERVIOUS AREA (AC)	0.26	
TREATMENT VOLUME PROVIDED (CF)	416	
TARGET WQv TREATMENT VOLUME (CF)	955	
FILTER BED AREA (SF) [1]	197	
FILTER BED SURFACE ELEVATION	271.40, 273.15	
DESIGN POINT/MAX. PONDING ELEVATION	272.00, 273.75	
PONDED WATER SURFACE ELEVATION AREA (SF) [2]	324	
OUTLET PIPE (UNDERDRAIN) SIZE / INVERT ELEV.	N / A	
THICKNESS OF FILTER MEDIA	REFER TO PROFILE	
PLACEMENT OF GEOTEXTILE (SIDES ONLY)	REFER TO FACILITY TYP. SECTION – SHEET 9	
PLANTINGS	REFER TO LANDSCAPE PLAN – SHEET 52	
COMPOSITION OF FILTER MEDIA	REFER TO MCDEP SPECIFICATIONS	

*NOTES:
1. "FILTER BED AREA (SF)" REPRESENTS THE EXPOSED SURFACE AREA AT THE PROPOSED "FILTER BED SURFACE ELEVATION".
2. FOR MATERIAL QUANTITY ESTIMATIONS, THE PLANTING MEDIA, STONE, MULCH, ETC. SHOULD BE BASED ON THE AREA OF "PONDED WATER SURFACE ELEVATION AREA (SF)".
3. CONTRACTOR SHALL TEST PIT UTILITIES PRIOR TO CONSTRUCTION. IF UTILITY IS UNAVOIDABLE, CONTRACTOR SHALL REFER TO SHEET 8 FOR UTILITY CROSSING DETAIL WITHIN THE FACILITY.

COMBINATION CONC. CURB AND GUTTER

STA. TO STA.	L.F.	REMARKS
25+82, RT TO 25+98, RT	16	TYPE A, MC.100.01
26+04, RT TO 26+41, RT	37	TYPE A, MC.100.01
26+47, RT TO 26+58, RT	11	TYPE A, MC.100.01
26+58, RT TO 26+69, RT	10	TRANSITION TYPE A TO TYPE C

10' 0 10' 20'
SCALE: 1"=10'

McCormick Taylor
Engineers & Planners Since 1946
509 South Exater Street
4th Floor
Baltimore, Maryland 21202
(410) 662-7400

PLAN AND PROFILE - BMP 129
FRANKLIN KNOLLS-PHASE 4
SLIGO (13th) ELECTION DISTRICT
PARCEL X, SUBDIVISION X, LIBER X FOLIO X
MONTGOMERY COUNTY, MARYLAND

CLIENT: MONTGOMERY COUNTY DEPT OF ENVIRONMENTAL PROTECTION
255 ROCKVILLE PIKE, RM. 120
ROCKVILLE, MD 20850-4166
MR. PAUL BOGLE, P.E.
(240) 777-7757

DESIGN	KCS
DRAFT	WJW
APPROVED	HJD
DATE	JUNE 2014
SCALE	1"=10'

SHEET 18 OF 52

FILE: I:\5182\13 - Roadway LID - Forest Estates and the Four Corners Area\Design\Engineering\PlanSet\FK P4\gr4D-P009_FK4_BMP-129.dgn
PLOTTED: Thursday, June 05, 2014 AT 02:46 PM

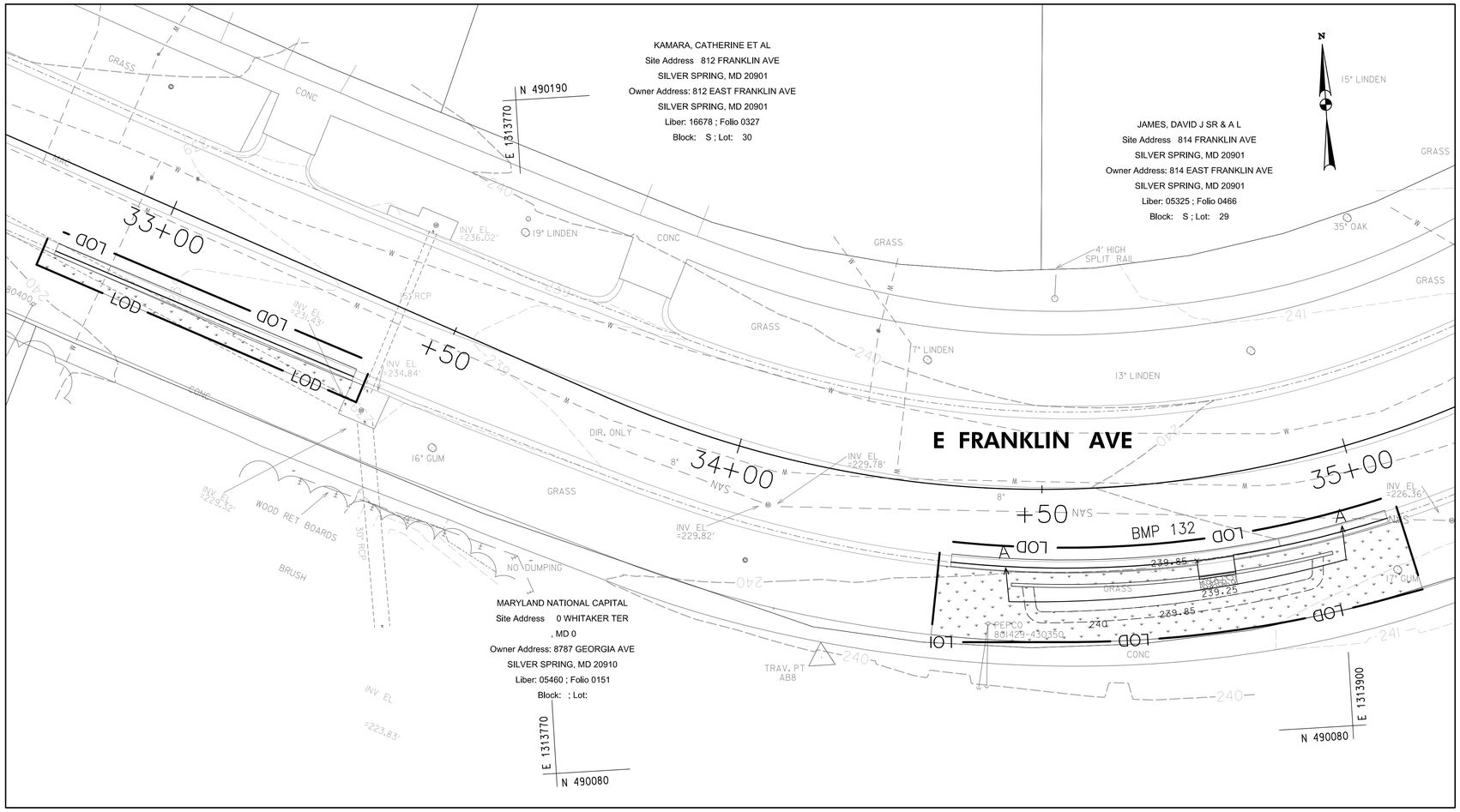

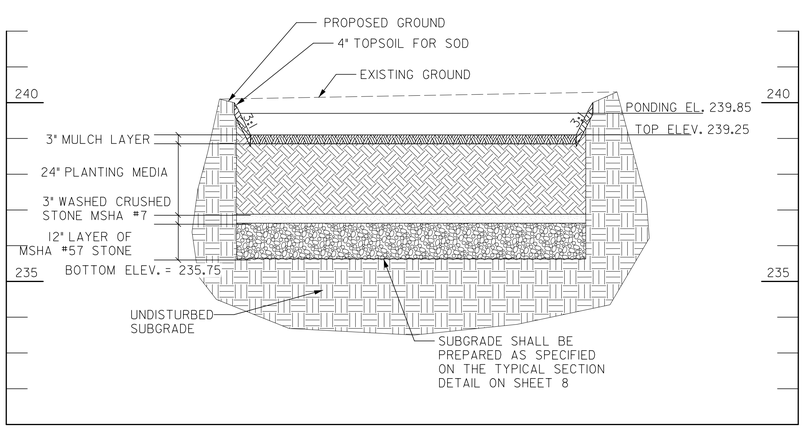

PROFILE (A-A) - RAIN GARDEN FACILITY (BMP 132)

SCALE: HORIZ. 1"=10'
VERT. 1"=2'

COMBINATION CONC. CURB AND GUTTER

STA. TO STA.	L.F.	REMARKS
32+85, RT TO 33+38, RT	53	TYPE C, MC.101.01
34+36, RT TO 34+45, RT	10	TRANSITION TYPE A TO TYPE C
34+45, RT TO 34+74, RT	30	TYPE A, MC.100.01
34+79, RT TO 34+94, RT	16	TYPE A, MC.100.01
34+94, RT TO 35+03, RT	10	TRANSITION TYPE A TO TYPE C

*NOTES:

1. "FILTER BED AREA (SF)" REPRESENTS THE EXPOSED SURFACE AREA AT THE PROPOSED "FILTER BED SURFACE ELEVATION".
2. FOR MATERIAL QUANTITY ESTIMATIONS, THE PLANTING MEDIA, STONE, MULCH, ETC. SHOULD BE BASED ON THE AREA OF "PONDED WATER SURFACE ELEVATION AREA (SF)".
3. CONTRACTOR SHALL TEST PIT UTILITIES PRIOR TO CONSTRUCTION. IF UTILITY IS UNAVOIDABLE, CONTRACTOR SHALL REFER TO SHEET 8 FOR UTILITY CROSSING DETAIL WITHIN THE FACILITY.

AS-BUILT DATA FOR FILTERS (BIORETENTION/RAIN GARDENS)

*TO BE COMPLETED BY THE CERTIFYING ENGINEER

TYPE OF FACILITY: RAIN GARDEN **BMP ID:** BMP 132

FEATURE	DESIGN	*AS-BUILT
DRAINAGE AREA (AC)	0.25	
TOTAL IMPERVIOUS AREA (AC)	0.09	
TREATMENT VOLUME PROVIDED (CF)	332	
TARGET WQv TREATMENT VOLUME (CF)	339	
FILTER BED AREA (SF) [1]	159	
FILTER BED SURFACE ELEVATION	239.25	
DESIGN POINT/MAX. PONDING ELEVATION	239.85	
PONDED WATER SURFACE ELEVATION AREA (SF) [2]	258	
OUTLET PIPE (UNDERDRAIN) SIZE / INVERT ELEV.	N / A	
THICKNESS OF FILTER MEDIA	REFER TO PROFILE	
PLACEMENT OF GEOTEXTILE (SIDES ONLY)	REFER TO FACILITY TYP. SECTION – SHEET 9	
PLANTINGS	REFER TO LANDSCAPE PLAN – SHEET 52	
COMPOSITION OF FILTER MEDIA	REFER TO MCDEP SPECIFICATIONS	

10' 0 10' 20'
SCALE: 1"=10'

McCormick Taylor
Engineers & Planners Since 1946
509 South Exeter Street
4th Floor
Baltimore, Maryland 21202
(410) 662-7400

PLAN AND PROFILE - BMP 132

FRANKLIN KNOLLS-PHASE 4

SLIGO (13th) ELECTION DISTRICT

PARCEL X, SUBDIVISION X, LIBER X FOLIO X

MONTGOMERY COUNTY, MARYLAND

CLIENT: MONTGOMERY COUNTY DEPT OF ENVIRONMENTAL PROTECTION
255 ROCKVILLE PIKE, RM. 120
ROCKVILLE, MD 20850-4166
MR. PAUL BOGLE, P.E.
(240) 777-7757

DESIGN	KCS
DRAFT	WJW
APPROVED	HJD
DATE	JUNE 2014
SCALE	1"=10'

SHEET 19 OF 52

FILE: I:\5192\13 - Roadway LD - Forest Estates and the Four Corners Area\Design\Engineering\PlanSet\FK P4\pl\D-P011_FK4_BMP-132.dgn
PLOTTED: Thursday, June 05, 2014 AT 03:23 PM

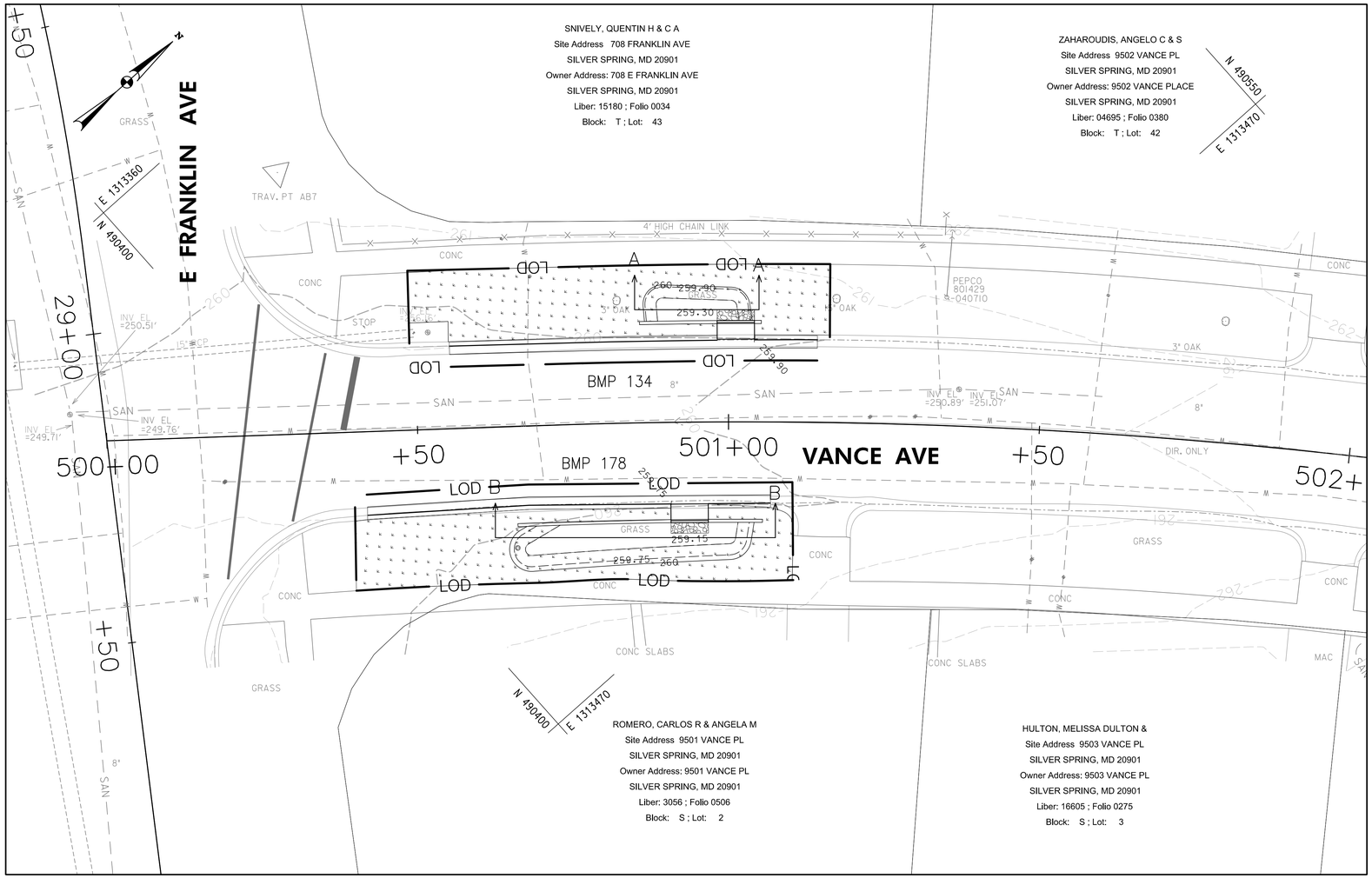

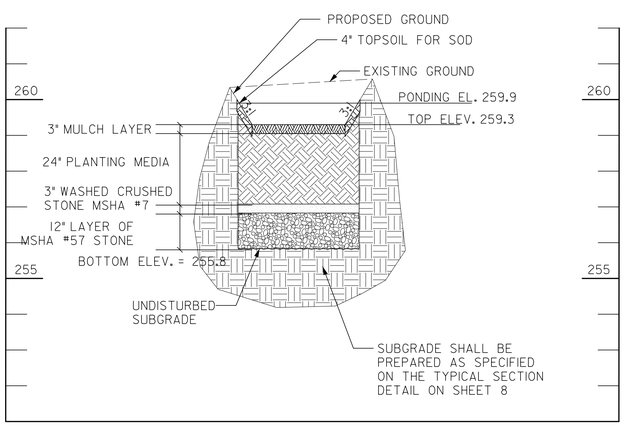

PROFILE (A-A) - RAIN GARDEN FACILITY (BMP 134)

SCALE: HORIZ. 1"=10'
VERT. 1"=2'

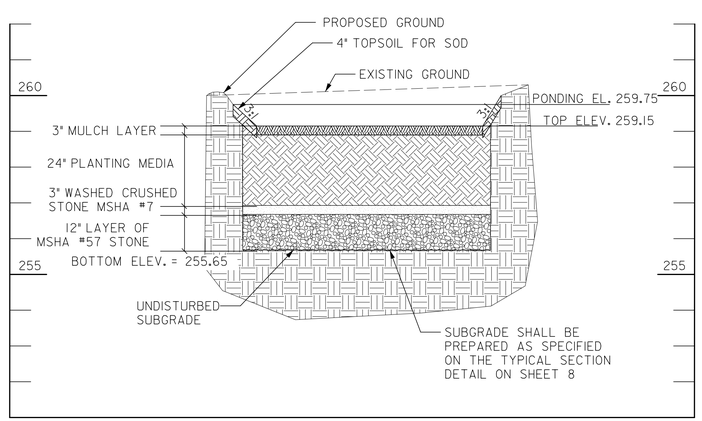

PROFILE (B-B) - RAIN GARDEN FACILITY (BMP 178)

SCALE: HORIZ. 1"=10'
VERT. 1"=2'

AS-BUILT DATA FOR FILTERS (BIORETENTION/RAIN GARDENS)

*TO BE COMPLETED BY THE CERTIFYING ENGINEER

TYPE OF FACILITY: RAIN GARDEN — BMP ID: BMP 134

FEATURE	DESIGN	*AS-BUILT
DRAINAGE AREA (AC)	0.95	
TOTAL IMPERVIOUS AREA (AC)	0.25	
TREATMENT VOLUME PROVIDED (CF)	107	
TARGET WQv TREATMENT VOLUME (CF)	648	
FILTER BED AREA (SF) [1]	45	
FILTER BED SURFACE ELEVATION	259.30	
DESIGN POINT/MAX. PONDING ELEVATION	259.90	
PONDED WATER SURFACE ELEVATION AREA (SF) [2]	85	
OUTLET PIPE (UNDERDRAIN) SIZE / INVERT ELEV.	N / A	
THICKNESS OF FILTER MEDIA	REFER TO PROFILE	
PLACEMENT OF GEOTEXTILE (SIDES ONLY)	REFER TO FACILITY TYP. SECTION – SHEET 9	
PLANTINGS	REFER TO LANDSCAPE PLAN – SHEET 52	
COMPOSITION OF FILTER MEDIA	REFER TO MCDEP SPECIFICATIONS	

*NOTES:

1. "FILTER BED AREA (SF)" REPRESENTS THE EXPOSED SURFACE AREA AT THE PROPOSED "FILTER BED SURFACE ELEVATION".
2. FOR MATERIAL QUANTITY ESTIMATIONS, THE PLANTING MEDIA, STONE, MULCH, ETC. SHOULD BE BASED ON THE AREA OF "PONDED WATER SURFACE ELEVATION AREA (SF)".
3. CONTRACTOR SHALL TEST PIT UTILITIES PRIOR TO CONSTRUCTION. IF UTILITY IS UNAVOIDABLE, CONTRACTOR SHALL REFER TO SHEET 8 FOR UTILITY CROSSING DETAIL WITHIN THE FACILITY.

AS-BUILT DATA FOR FILTERS (BIORETENTION/RAIN GARDENS)

*TO BE COMPLETED BY THE CERTIFYING ENGINEER

TYPE OF FACILITY: RAIN GARDEN — BMP ID: BMP 178

FEATURE	DESIGN	*AS-BUILT
DRAINAGE AREA (AC)	0.33	
TOTAL IMPERVIOUS AREA (AC)	0.15	
TREATMENT VOLUME PROVIDED (CF)	272	
TARGET WQv TREATMENT VOLUME (CF)	550	
FILTER BED AREA (SF) [1]	129	
FILTER BED SURFACE ELEVATION	259.15	
DESIGN POINT/MAX. PONDING ELEVATION	259.75	
PONDED WATER SURFACE ELEVATION AREA (SF) [2]	212	
OUTLET PIPE (UNDERDRAIN) SIZE / INVERT ELEV.	N / A	
THICKNESS OF FILTER MEDIA	REFER TO PROFILE	
PLACEMENT OF GEOTEXTILE (SIDES ONLY)	REFER TO FACILITY TYP. SECTION – SHEET 9	
PLANTINGS	REFER TO LANDSCAPE PLAN – SHEET 52	
COMPOSITION OF FILTER MEDIA	REFER TO MCDEP SPECIFICATIONS	

COMBINATION CONC. CURB AND GUTTER

STA. TO STA.	L.F.	REMARKS
500+56, LT TO 500+98, LT	43	TYPE A, MC.100.01
501+04, LT TO 501+14, LT	10	TRANSITION TYPE A TO TYPE C
500+42, RT TO 500+91, RT	49	TYPE A, MC.100.01
500+97, RT TO 501+07, RT	10	TRANSITION TYPE A TO TYPE C

10' 0 10' 20'
SCALE: 1"=10'

McCormick Taylor
Engineers & Planners Since 1946
509 South Exeter Street
4th Floor
Baltimore, Maryland 21202
(410) 662-7400

PLAN AND PROFILE - BMP 134 & 178

FRANKLIN KNOLLS-PHASE 4

SLIGO (13th) ELECTION DISTRICT

PARCEL X, SUBDIVISION X, LIBER X FOLIO X

MONTGOMERY COUNTY, MARYLAND

CLIENT: MONTGOMERY COUNTY DEPT OF ENVIRONMENTAL PROTECTION
255 ROCKVILLE PIKE, RM. 120
ROCKVILLE, MD 20850-4166
MR. PAUL BOGLE, P.E.
(240) 777-7757

DESIGN	KCS	DATE	JUNE 2014
DRAFT	WJW	SCALE	1"=10'
APPROVED	HJD		

SHEET 20 OF 52

FILE: 1351B213 - Roadway LID – Forest Estates and the Four Corners Area\Design\Engineering\PlanSet\FK P4\pltD-P012_FK4_BMP-134_178.dgn
PLOTTED: Thursday, June 05, 2014 AT 02:46 PM

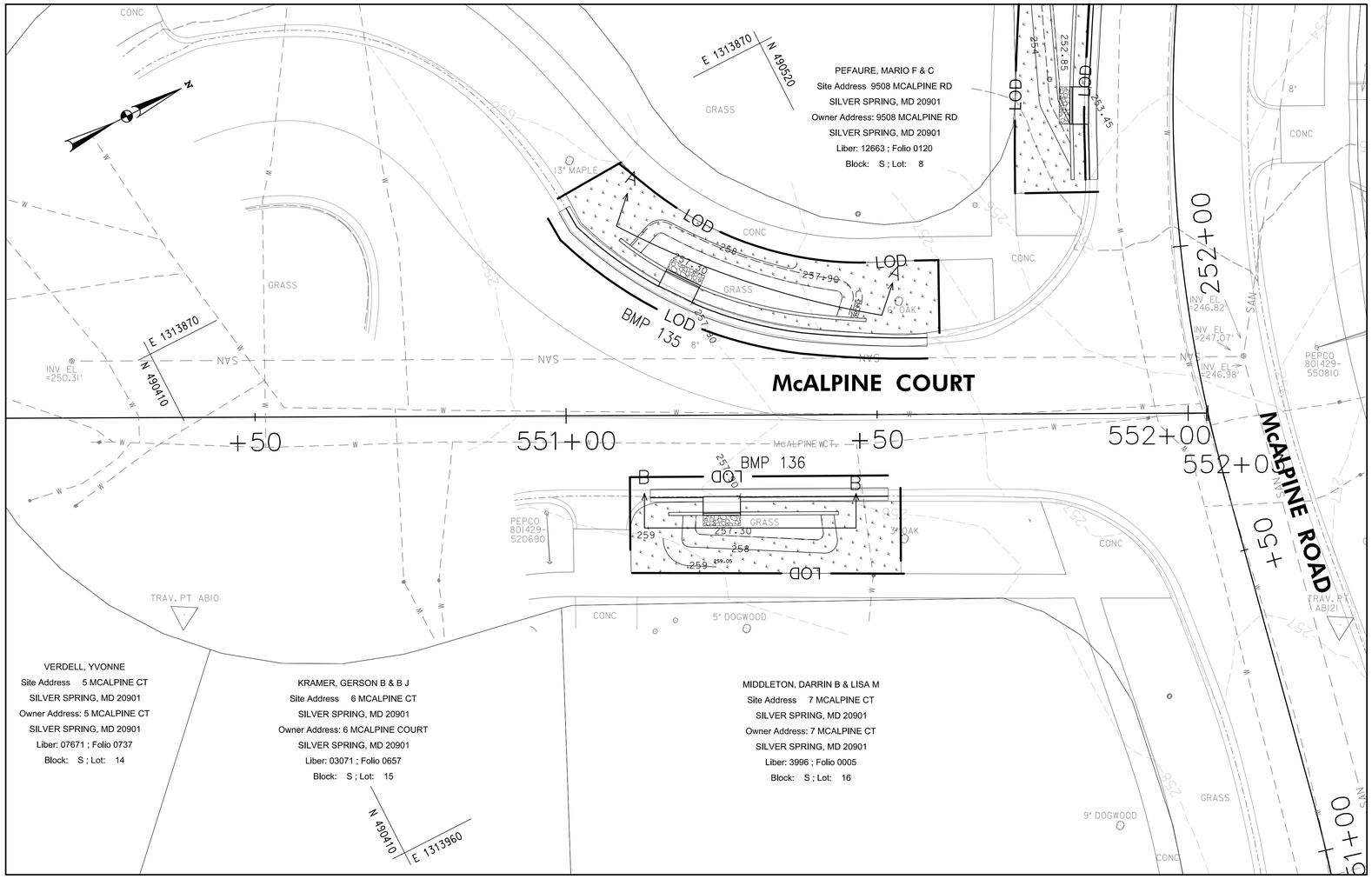

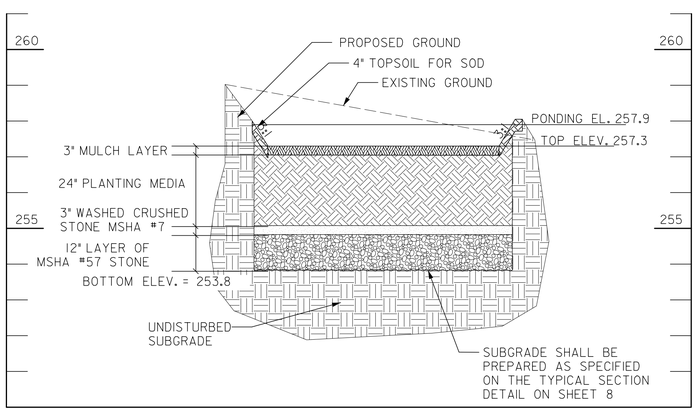

PROFILE (A-A) - RAIN GARDEN FACILITY (BMP 135)

SCALE: HORIZ. 1"=10'
VERT. 1"=2'

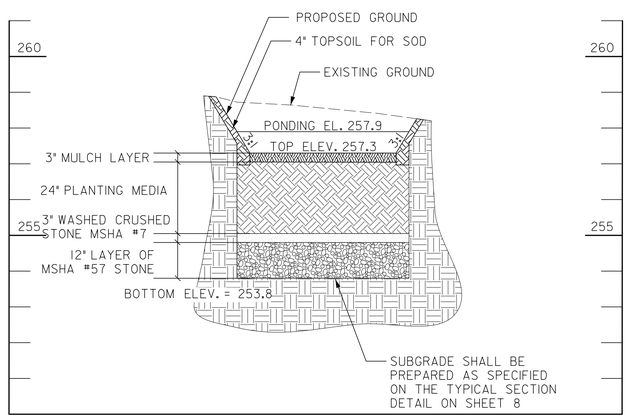

PROFILE (B-B) - RAIN GARDEN FACILITY (BMP 136)

SCALE: HORIZ. 1"=10'
VERT. 1"=2'

AS-BUILT DATA FOR FILTERS (BIORETENTION/RAIN GARDENS)

*TO BE COMPLETED BY THE CERTIFYING ENGINEER

TYPE OF FACILITY: RAIN GARDEN — BMP ID: BMP 135

FEATURE	DESIGN	*AS-BUILT
DRAINAGE AREA (AC)	0.29	
TOTAL IMPERVIOUS AREA (AC)	0.12	
TREATMENT VOLUME PROVIDED (CF)	295	
TARGET WQv TREATMENT VOLUME (CF)	445	
FILTER BED AREA (SF) [1]	152	
FILTER BED SURFACE ELEVATION	257.30	
DESIGN POINT/MAX. PONDING ELEVATION	257.90	
PONDED WATER SURFACE ELEVATION AREA (SF) [2]	227	
OUTLET PIPE (UNDERDRAIN) SIZE / INVERT ELEV.	N / A	
THICKNESS OF FILTER MEDIA	REFER TO PROFILE	
PLACEMENT OF GEOTEXTILE (SIDES ONLY)	REFER TO FACILITY TYP. SECTION – SHEET 9	
PLANTINGS	REFER TO LANDSCAPE PLAN – SHEET 52	
COMPOSITION OF FILTER MEDIA	REFER TO MCDEP SPECIFICATIONS	

*NOTES:

1. "FILTER BED AREA (SF)" REPRESENTS THE EXPOSED SURFACE AREA AT THE PROPOSED "FILTER BED SURFACE ELEVATION".
2. FOR MATERIAL QUANTITY ESTIMATIONS, THE PLANTING MEDIA, STONE, MULCH, ETC. SHOULD BE BASED ON THE AREA OF "PONDED WATER SURFACE ELEVATION AREA (SF)".
3. CONTRACTOR SHALL TEST PIT UTILITIES PRIOR TO CONSTRUCTION. IF UTILITY IS UNAVOIDABLE, CONTRACTOR SHALL REFER TO SHEET 8 FOR UTILITY CROSSING DETAIL WITHIN THE FACILITY.

AS-BUILT DATA FOR FILTERS (BIORETENTION/RAIN GARDENS)

*TO BE COMPLETED BY THE CERTIFYING ENGINEER

TYPE OF FACILITY: RAIN GARDEN — BMP ID: BMP 136

FEATURE	DESIGN	*AS-BUILT
DRAINAGE AREA (AC)	0.35	
TOTAL IMPERVIOUS AREA (AC)	0.12	
TREATMENT VOLUME PROVIDED (CF)	175	
TARGET WQv TREATMENT VOLUME (CF)	456	
FILTER BED AREA (SF) [1]	79	
FILTER BED SURFACE ELEVATION	257.30	
DESIGN POINT/MAX. PONDING ELEVATION	257.90	
PONDED WATER SURFACE ELEVATION AREA (SF) [2]	132	
OUTLET PIPE (UNDERDRAIN) SIZE / INVERT ELEV.	N / A	
THICKNESS OF FILTER MEDIA	REFER TO PROFILE	
PLACEMENT OF GEOTEXTILE (SIDES ONLY)	REFER TO FACILITY TYP. SECTION – SHEET 9	
PLANTINGS	REFER TO LANDSCAPE PLAN – SHEET 52	
COMPOSITION OF FILTER MEDIA	REFER TO MCDEP SPECIFICATIONS	

COMBINATION CONC. CURB AND GUTTER

STA. TO STA.	L.F.	REMARKS
551+00, LT TO 551+07, LT	10	TRANSITION TYPE A TO TYPE C
551+07, LT TO 551+15, LT	10	TYPE A, MC.100.01
551+20, LT TO 551+48, LT	29	TYPE A, MC.100.01
551+48, LT TO 551+58, LT	10	TRANSITION TYPE A TO TYPE C
551+13, RT TO 551+21, RT	7	TYPE A, MC.100.01
551+27, RT TO 551+42, RT	15	TYPE A, MC.100.01
551+42, RT TO 551+52, RT	10	TRANSITION TYPE A TO TYPE C

10' 0 10' 20'
SCALE: 1"=10'

509 South Exeter Street
4th Floor
Baltimore, Maryland 21202
(410) 662-7400

McCormick Taylor
Engineers & Planners
Since 1946

PLAN AND PROFILE - BMP 135 & 136
FRANKLIN KNOLLS-PHASE 4
SLIGO (13th) ELECTION DISTRICT
PARCEL X, SUBDIVISION X, LIBER X FOLIO X
MONTGOMERY COUNTY, MARYLAND

CLIENT: MONTGOMERY COUNTY DEPT OF ENVIRONMENTAL PROTECTION
255 ROCKVILLE PIKE, RM. 120
ROCKVILLE, MD 20850-4166
MR. PAUL BOGLE, P.E.
(240) 777-7757

DESIGN	KCS
DRAFT	WJW
APPROVED	HJD
DATE	JUNE 2014
SCALE	1"=10'

SHEET 21 OF 52

FILE: 13512013 - Roadway LID - Forest Estates and the Four Corners Area\Design\Engineering\Plan\Sid\FK P4\pnD-F0013_FK4_BMP-135_136.dgn
PLOTTED: Thursday, June 05, 2014 AT 02:46 PM

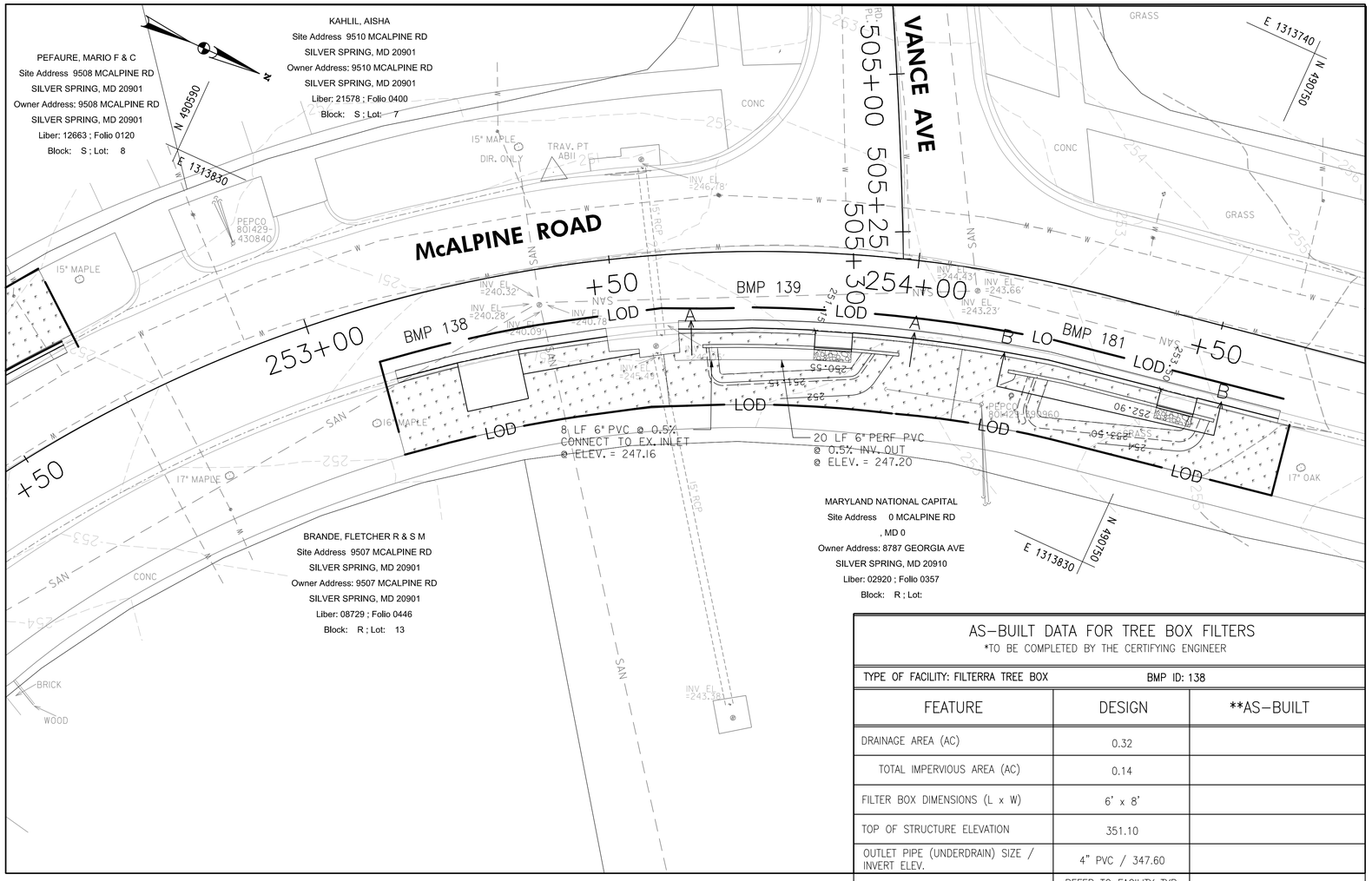

AS-BUILT DATA FOR TREE BOX FILTERS

*TO BE COMPLETED BY THE CERTIFYING ENGINEER

TYPE OF FACILITY: FILTERRA TREE BOX — BMP ID: 138

FEATURE	DESIGN	**AS-BUILT
DRAINAGE AREA (AC)	0.32	
TOTAL IMPERVIOUS AREA (AC)	0.14	
FILTER BOX DIMENSIONS (L x W)	6' x 8'	
TOP OF STRUCTURE ELEVATION	351.10	
OUTLET PIPE (UNDERDRAIN) SIZE / INVERT ELEV.	4" PVC / 347.60	
THICKNESS OF FILTER MEDIA	REFER TO FACILITY TYP. SECTION – SHEET 11	
PLANTINGS	REFER TO LANDSCAPE PLAN – SHEET 52	
COMPOSITION & DEPTH OF FILTER MEDIA	REFER TO MANUFACTURER SPECIFICATIONS	

AS-BUILT DATA FOR FILTERS (BIORETENTION/RAIN GARDENS)

*TO BE COMPLETED BY THE CERTIFYING ENGINEER

TYPE OF FACILITY: BIORETENTION — BMP ID: 139

FEATURE	DESIGN	*AS-BUILT
DRAINAGE AREA (AC)	0.74	
TOTAL IMPERVIOUS AREA (AC)	0.23	
TREATMENT VOLUME PROVIDED (CF)	157	
TARGET WQv TREATMENT VOLUME (CF)	851	
FILTER BED AREA (SF) [1]	80	
FILTER BED SURFACE ELEVATION	250.55	
DESIGN POINT/MAX. PONDING ELEVATION	251.15	
PONDED WATER SURFACE ELEVATION AREA (SF) [2]	121	
OUTLET PIPE (UNDERDRAIN) SIZE / INVERT ELEV.	6" / 247.16	
THICKNESS OF FILTER MEDIA	REFER TO PROFILE	
PLACEMENT OF GEOTEXTILE (SIDES ONLY)	REFER TO FACILITY TYP. SECTION – SHEET 9	
PLANTINGS	REFER TO LANDSCAPE PLAN – SHEET 52	
COMPOSITION OF FILTER MEDIA	REFER TO MCDEP SPECIFICATIONS	

*NOTES:
1. "FILTER BED AREA (SF)" REPRESENTS THE EXPOSED SURFACE AREA AT THE PROPOSED "FILTER BED SURFACE ELEVATION".
2. FOR MATERIAL QUANTITY ESTIMATIONS, THE PLANTING MEDIA, STONE, MULCH, ETC. SHOULD BE BASED ON THE AREA OF "PONDED WATER SURFACE ELEVATION AREA (SF)".
3. CONTRACTOR SHALL TEST PIT UTILITIES PRIOR TO CONSTRUCTION. IF UTILITY IS UNAVOIDABLE, CONTRACTOR SHALL REFER TO SHEET 8 FOR UTILITY CROSSING DETAIL WITHIN THE FACILITY.

AS-BUILT DATA FOR FILTERS (BIORETENTION/RAIN GARDENS)

*TO BE COMPLETED BY THE CERTIFYING ENGINEER

TYPE OF FACILITY: RAIN GARDEN — BMP ID: 181

FEATURE	DESIGN	*AS-BUILT
DRAINAGE AREA (AC)	0.17	
TOTAL IMPERVIOUS AREA (AC)	0.09	
TREATMENT VOLUME PROVIDED (CF)	212	
TARGET WQv TREATMENT VOLUME (CF)	325	
FILTER BED AREA (SF) [1]	103	
FILTER BED SURFACE ELEVATION	252.90	
DESIGN POINT/MAX. PONDING ELEVATION	253.50	
PONDED WATER SURFACE ELEVATION AREA (SF) [2]	165	
OUTLET PIPE (UNDERDRAIN) SIZE / INVERT ELEV.	N / A	
THICKNESS OF FILTER MEDIA	REFER TO PROFILE	
PLACEMENT OF GEOTEXTILE (SIDES ONLY)	REFER TO FACILITY TYP. SECTION – SHEET 9	
PLANTINGS	REFER TO LANDSCAPE PLAN – SHEET 52	
COMPOSITION OF FILTER MEDIA	REFER TO MCDEP SPECIFICATIONS	

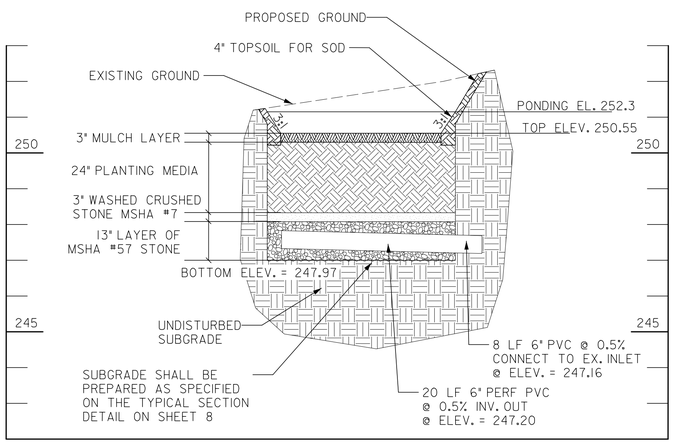

PROFILE (A-A) - BIORETENTION FACILITY (BMP 139)

SCALE: HORIZ. 1"=10'
VERT. 1"=2'

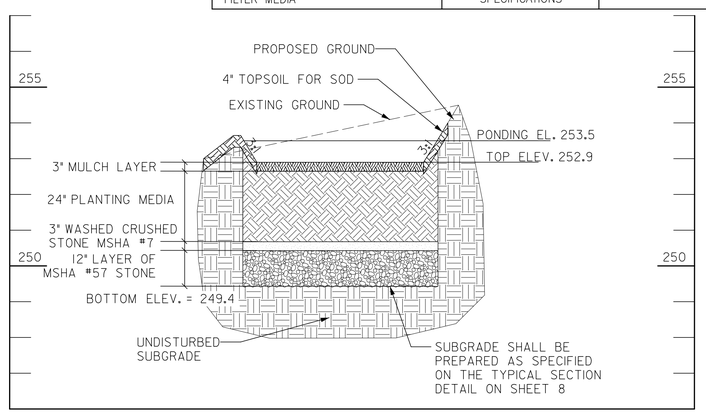

PROFILE (B-B) - RAIN GARDEN FACILITY (BMP 181)

SCALE: HORIZ. 1"=10'
VERT. 1"=2'

COMBINATION CONC. CURB AND GUTTER

STA. TO STA.	L.F.	REMARKS
253+12, RT TO 253+22, RT	10	TRANSITION TYPE C TO TYPE A
253+33, RT TO 254+48, RT	15	TYPE A, MC.100.01
253+61, RT TO 253+84, RT	22	TYPE A, MC.100.01
253+90, RT TO 254+43, RT	51	TYPE A, MC.100.01
254+49, RT TO 254+53, RT	3	TYPE A, MC.100.01
254+53, RT TO 254+63, RT	10	TRANSITION TYPE A TO TYPE C

10' 0 10' 20'
SCALE: 1"=10'

McCormick Taylor
Engineers & Planners Since 1946
509 South Exeter Street
4th Floor
Baltimore, Maryland 21202
(410) 662-7400

PLAN AND PROFILE - BMP 138, 139 & 181

FRANKLIN KNOLLS-PHASE 4

SLIGO (13th) ELECTION DISTRICT
PARCEL X, SUBDIVISION X, LIBER X FOLIO X
MONTGOMERY COUNTY, MARYLAND

CLIENT: MONTGOMERY COUNTY DEPT OF ENVIRONMENTAL PROTECTION
255 ROCKVILLE PIKE, RM. 120
ROCKVILLE, MD 20850-4166
MR. PAUL BOGLE, P.E.
(240) 777-7757

DESIGN	KCS
DRAFT	WJW
APPROVED	HJD
DATE	JUNE 2014
SCALE	1"=10'

SHEET 22 OF 52

FILE: I:\5192\13 - Roadway LID - Forest Estates and the Four Corners Area\Design\Engineering\PlanSet\FK F4\pd\D-P014_FK4_BMP-138_139_181.dgn
PLOTTED: Thursday, June 05, 2014 AT 02:46 PM

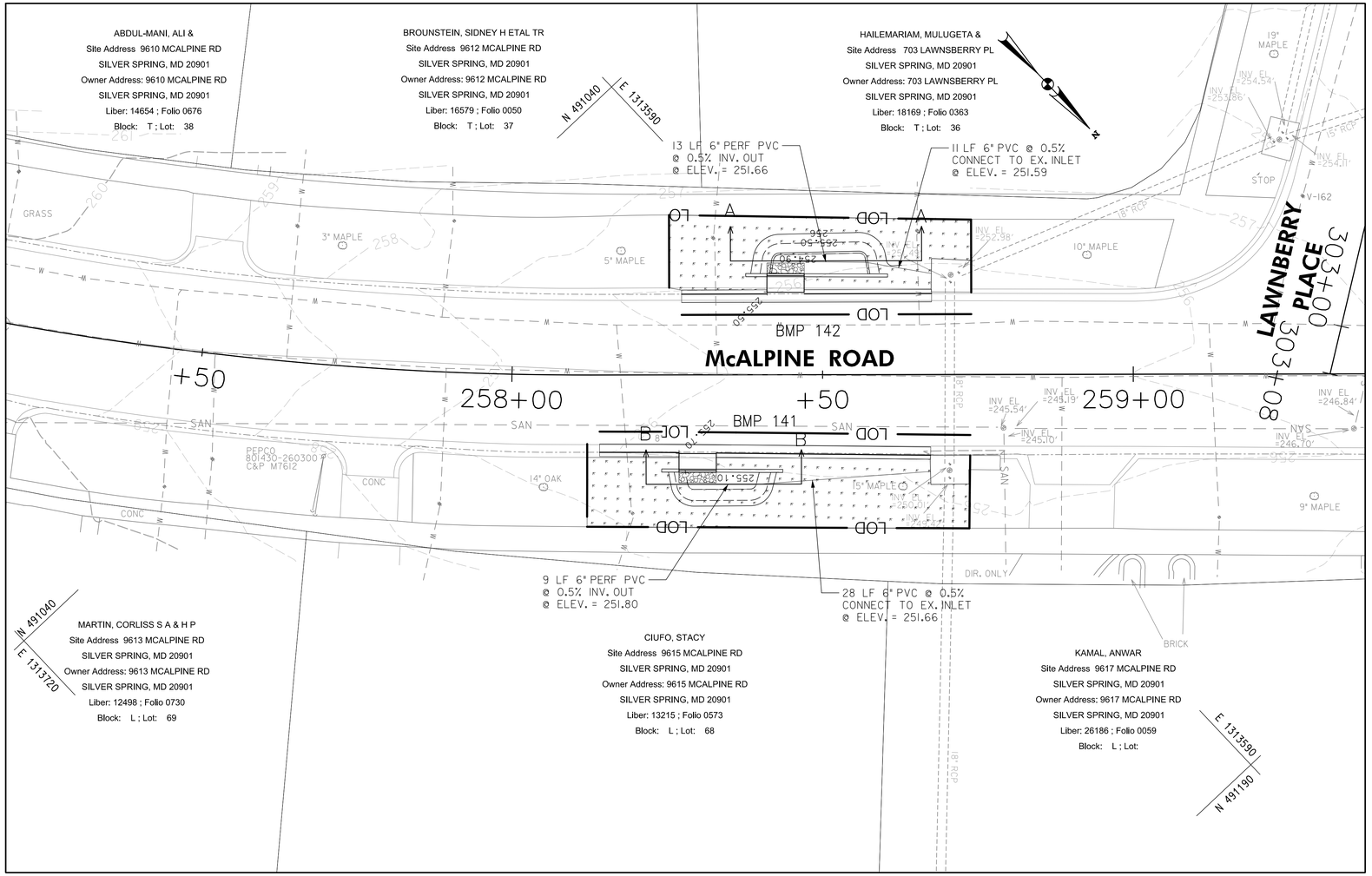

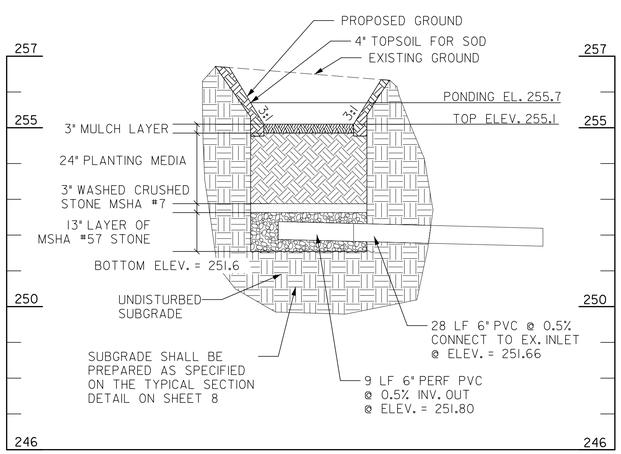

PROFILE (A-A) - BIORETENTION FACILITY (BMP 141)

SCALE: HORIZ. 1"=10'
VERT. 1"=2'

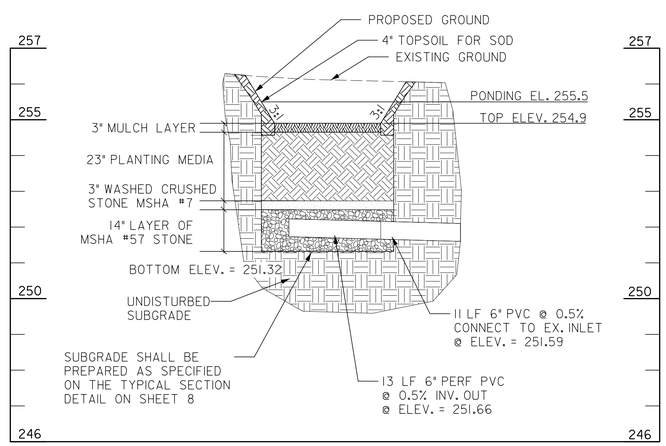

PROFILE (B-B) - BIORETENTION FACILITY (BMP 142)

SCALE: HORIZ. 1"=10'
VERT. 1"=2'

AS-BUILT DATA FOR FILTERS (BIORETENTION/RAIN GARDENS)

*TO BE COMPLETED BY THE CERTIFYING ENGINEER

TYPE OF FACILITY: BIORETENTION — BMP ID: 141

FEATURE	DESIGN	*AS-BUILT
DRAINAGE AREA (AC)	0.29	
TOTAL IMPERVIOUS AREA (AC)	0.13	
TREATMENT VOLUME PROVIDED (CF)	80	
TARGET WQv TREATMENT VOLUME (CF)	477	
FILTER BED AREA (SF) [1]	31	
FILTER BED SURFACE ELEVATION	255.10	
DESIGN POINT/MAX. PONDING ELEVATION	255.70	
PONDED WATER SURFACE ELEVATION AREA (SF) [2]	64	
OUTLET PIPE (UNDERDRAIN) SIZE / INVERT ELEV.	6" / 251.66	
THICKNESS OF FILTER MEDIA	REFER TO PROFILE	
PLACEMENT OF GEOTEXTILE (SIDES ONLY)	REFER TO FACILITY TYP. SECTION – SHEET 9	
PLANTINGS	REFER TO LANDSCAPE PLAN – SHEET 52	
COMPOSITION OF FILTER MEDIA	REFER TO MCDEP SPECIFICATIONS	

*NOTES:

1. "FILTER BED AREA (SF)" REPRESENTS THE EXPOSED SURFACE AREA AT THE PROPOSED "FILTER BED SURFACE ELEVATION".
2. FOR MATERIAL QUANTITY ESTIMATIONS, THE PLANTING MEDIA, STONE, MULCH, ETC. SHOULD BE BASED ON THE AREA OF "PONDED WATER SURFACE ELEVATION AREA (SF)".
3. CONTRACTOR SHALL TEST PIT UTILITIES PRIOR TO CONSTRUCTION. IF UTILITY IS UNAVOIDABLE, CONTRACTOR SHALL REFER TO SHEET 8 FOR UTILITY CROSSING DETAIL WITHIN THE FACILITY.

AS-BUILT DATA FOR FILTERS (BIORETENTION/RAIN GARDENS)

*TO BE COMPLETED BY THE CERTIFYING ENGINEER

TYPE OF FACILITY: BIORETENTION — BMP ID: 142

FEATURE		*AS-BUILT
DRAINAGE AREA (AC)	1.00	
TOTAL IMPERVIOUS AREA (AC)	0.29	
TREATMENT VOLUME PROVIDED (CF)	112	
TARGET WQv TREATMENT VOLUME (CF)	1,129	
FILTER BED AREA (SF) [1]	48	
FILTER BED SURFACE ELEVATION	254.90	
DESIGN POINT/MAX. PONDING ELEVATION	255.50	
PONDED WATER SURFACE ELEVATION AREA (SF) [2]	89	
OUTLET PIPE (UNDERDRAIN) SIZE / INVERT ELEV.	6" / 251.59	
THICKNESS OF FILTER MEDIA	REFER TO PROFILE	
PLACEMENT OF GEOTEXTILE (SIDES ONLY)	REFER TO FACILITY TYP. SECTION – SHEET 9	
PLANTINGS	REFER TO LANDSCAPE PLAN – SHEET 52	
COMPOSITION OF FILTER MEDIA	REFER TO MCDEP SPECIFICATIONS	

COMBINATION CONC. CURB AND GUTTER

STA. TO STA.	L.F.	REMARKS
258+27, LT TO 258+37, LT	10	TRANSITION TYPE A TO TYPE C
258+37, LT TO 258+41, LT	4	TYPE A, MC.100.01
258+47, LT TO 258+68, LT	21	TRANSITION TYPE A TO TYPE C
258+14, RT TO 258+24, RT	10	TRANSITION TYPE A TO TYPE C
258+24, RT TO 258+27, RT	3	TYPE A, MC.100.01
258+33, RT TO 258+67, RT	35	TYPE A, MC.100.01

10' 0 10' 20'
SCALE: 1"=10'

McCormick Taylor
Engineers & Planners Since 1946
509 South Exater Street
4th Floor
Baltimore, Maryland 21202
(410) 662-7400

PLAN AND PROFILE - BMP 141 & 142

FRANKLIN KNOLLS-PHASE 4

SLIGO (13th) ELECTION DISTRICT

PARCEL X, SUBDIVISION X, LIBER X FOLIO X

MONTGOMERY COUNTY, MARYLAND

CLIENT: MONTGOMERY COUNTY DEPT OF ENVIRONMENTAL PROTECTION
255 ROCKVILLE PIKE, RM. 120
ROCKVILLE, MD 20850-4166
MR. PAUL BOGLE, P.E.
(240) 777-7757

DESIGN	KCS		
DRAFT	WJW		
APPROVED	HJD		
DATE	JUNE 2014		
SCALE	1"=10'		

SHEET 23 OF 52

FILE: I:\53\52\13 - Roadway LID – Forest Estates and the Four Corners Area\Design\Engineering\PlanSet\FK P4\p4-PR16_FK4_BMP-141_142.dgn
PLOTTED: Thursday, June 05, 2014 AT 02:46 PM

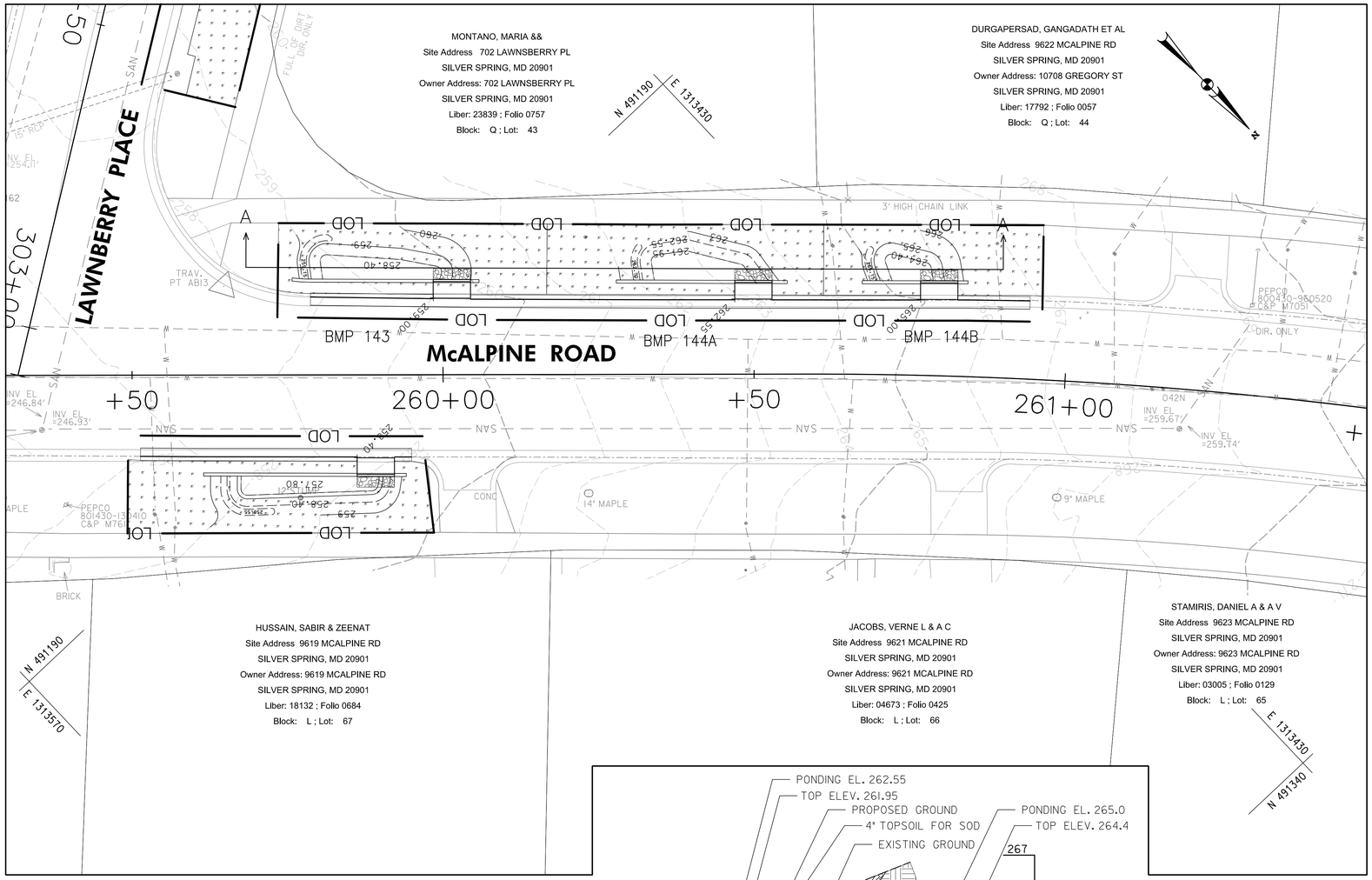

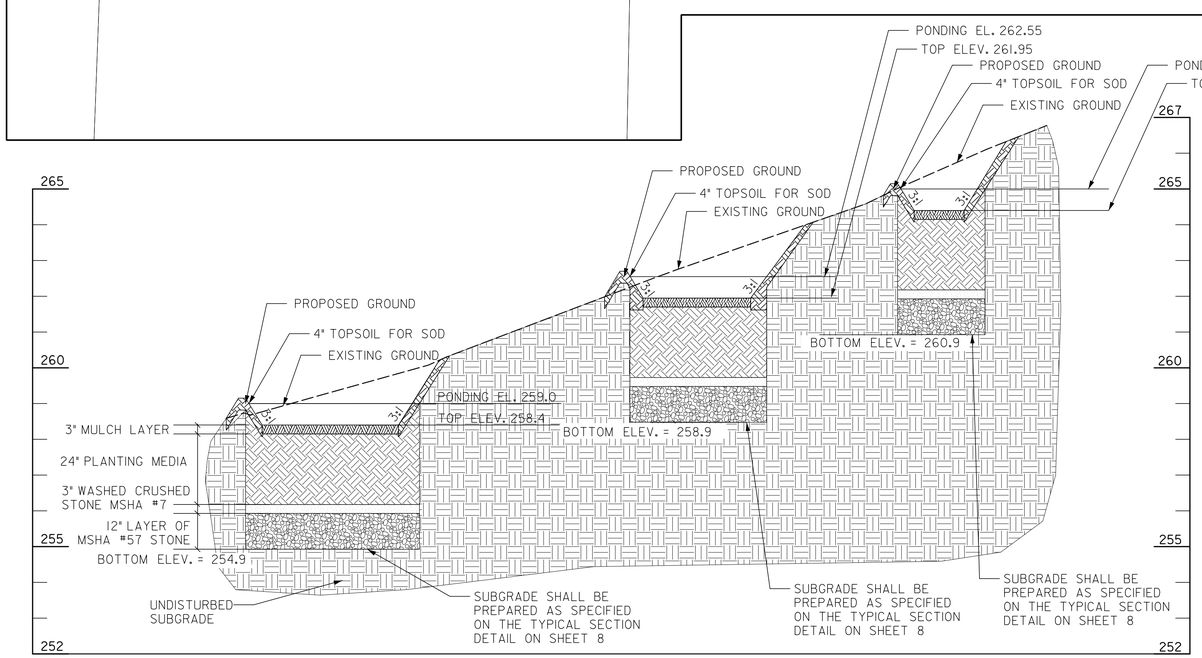

PROFILE (A-A) - RAIN GARDEN FACILITY (BMP 143 & 144A/B)

SCALE: HORIZ. 1"=10'
VERT. 1"=2'

AS-BUILT DATA FOR FILTERS (BIORETENTION/RAIN GARDENS)

*TO BE COMPLETED BY THE CERTIFYING ENGINEER

TYPE OF FACILITY: RAIN GARDEN — BMP ID: 143

FEATURE	DESIGN	*AS-BUILT
DRAINAGE AREA (AC)	0.15	
TOTAL IMPERVIOUS AREA (AC)	0.03	
TREATMENT VOLUME PROVIDED (CF)	142	
TARGET WQv TREATMENT VOLUME (CF)	125	
FILTER BED AREA (SF) [1]	62	
FILTER BED SURFACE ELEVATION	258.40	
DESIGN POINT/MAX. PONDING ELEVATION	259.00	
PONDED WATER SURFACE ELEVATION AREA (SF) [2]	112	
OUTLET PIPE (UNDERDRAIN) SIZE / INVERT ELEV.	N / A	
THICKNESS OF FILTER MEDIA	REFER TO PROFILE	
PLACEMENT OF GEOTEXTILE (SIDES ONLY)	REFER TO FACILITY TYP. SECTION – SHEET 9	
PLANTINGS	REFER TO LANDSCAPE PLAN – SHEET 52	
COMPOSITION OF FILTER MEDIA	REFER TO MCDEP SPECIFICATIONS	

*NOTES:

1. "FILTER BED AREA (SF)" REPRESENTS THE EXPOSED SURFACE AREA AT THE PROPOSED "FILTER BED SURFACE ELEVATION".
2. FOR MATERIAL QUANTITY ESTIMATIONS, THE PLANTING MEDIA, STONE, MULCH, ETC. SHOULD BE BASED ON THE AREA OF "PONDED WATER SURFACE ELEVATION AREA (SF)".
3. CONTRACTOR SHALL TEST PIT UTILITIES PRIOR TO CONSTRUCTION. IF UTILITY IS UNAVOIDABLE, CONTRACTOR SHALL REFER TO SHEET 8 FOR UTILITY CROSSING DETAIL WITHIN THE FACILITY.

COMBINATION CONC. CURB AND GUTTER

STA. TO STA.	L.F.	REMARKS
259+79, LT TO 259+98, LT	20	TYPE A, MC.100.01
260+04, LT TO 260+47, LT	42	TYPE A, MC.100.01
260+53, LT TO 260+76, LT	24	TYPE A, MC.100.01
260+82, LT TO 260+84, LT	2	TYPE A, MC.100.01
260+84, LT TO 260+94, LT	10	TRANSITION TYPE A TO TYPE C

AS-BUILT DATA FOR FILTERS (BIORETENTION/RAIN GARDENS)

*TO BE COMPLETED BY THE CERTIFYING ENGINEER

TYPE OF FACILITY: RAIN GARDEN — BMP ID: 144A/B

FEATURE	DESIGN	*AS-BUILT
DRAINAGE AREA (AC)	0.71	
TOTAL IMPERVIOUS AREA (AC)	0.21	
TREATMENT VOLUME PROVIDED (CF)	194	
TARGET WQv TREATMENT VOLUME (CF)	815	
FILTER BED AREA (SF) [1]	64	
FILTER BED SURFACE ELEVATION	261.95, 264.40	
DESIGN POINT/MAX. PONDING ELEVATION	262.55, 265.00	
PONDED WATER SURFACE ELEVATION AREA (SF) [2]	159	
OUTLET PIPE (UNDERDRAIN) SIZE / INVERT ELEV.	N / A	
THICKNESS OF FILTER MEDIA	REFER TO PROFILE	
PLACEMENT OF GEOTEXTILE (SIDES ONLY)	REFER TO FACILITY TYP. SECTION – SHEET 9	
PLANTINGS	REFER TO LANDSCAPE PLAN – SHEET 52	
COMPOSITION OF FILTER MEDIA	REFER TO MCDEP SPECIFICATIONS	

10' 0 10' 20'
SCALE: 1"=10'

McCormick Taylor
Engineers & Planners
Since 1946
509 South Exater Street
4th Floor
Baltimore, Maryland 21202
(410) 662-7400

PLAN AND PROFILE - BMP 143, 144A & 144B

FRANKLIN KNOLLS-PHASE 4

SLIGO (13th) ELECTION DISTRICT

PARCEL X, SUBDIVISION X, LIBER X FOLIO X

MONTGOMERY COUNTY, MARYLAND

CLIENT: MONTGOMERY COUNTY DEPT OF ENVIRONMENTAL PROTECTION
255 ROCKVILLE PIKE, RM. 120
ROCKVILLE, MD 20850-4166
MR. PAUL BOGLE, P.E.
(240) 777-7757

DESIGN	KCS
DRAFT	WJW
APPROVED	HJD
DATE	JUNE 2014
SCALE	1"=10'

SHEET 24 OF 52

FILE: I:\5182\13 - Roadway LID - Forest Estates and the Four Corners Area\Design\Engineering\PlanSet\FK PH4\HD-P017_FK4_BMP-143_144A-B.dgn
PLOTTED: Thursday, June 05, 2014 AT 02:46 PM

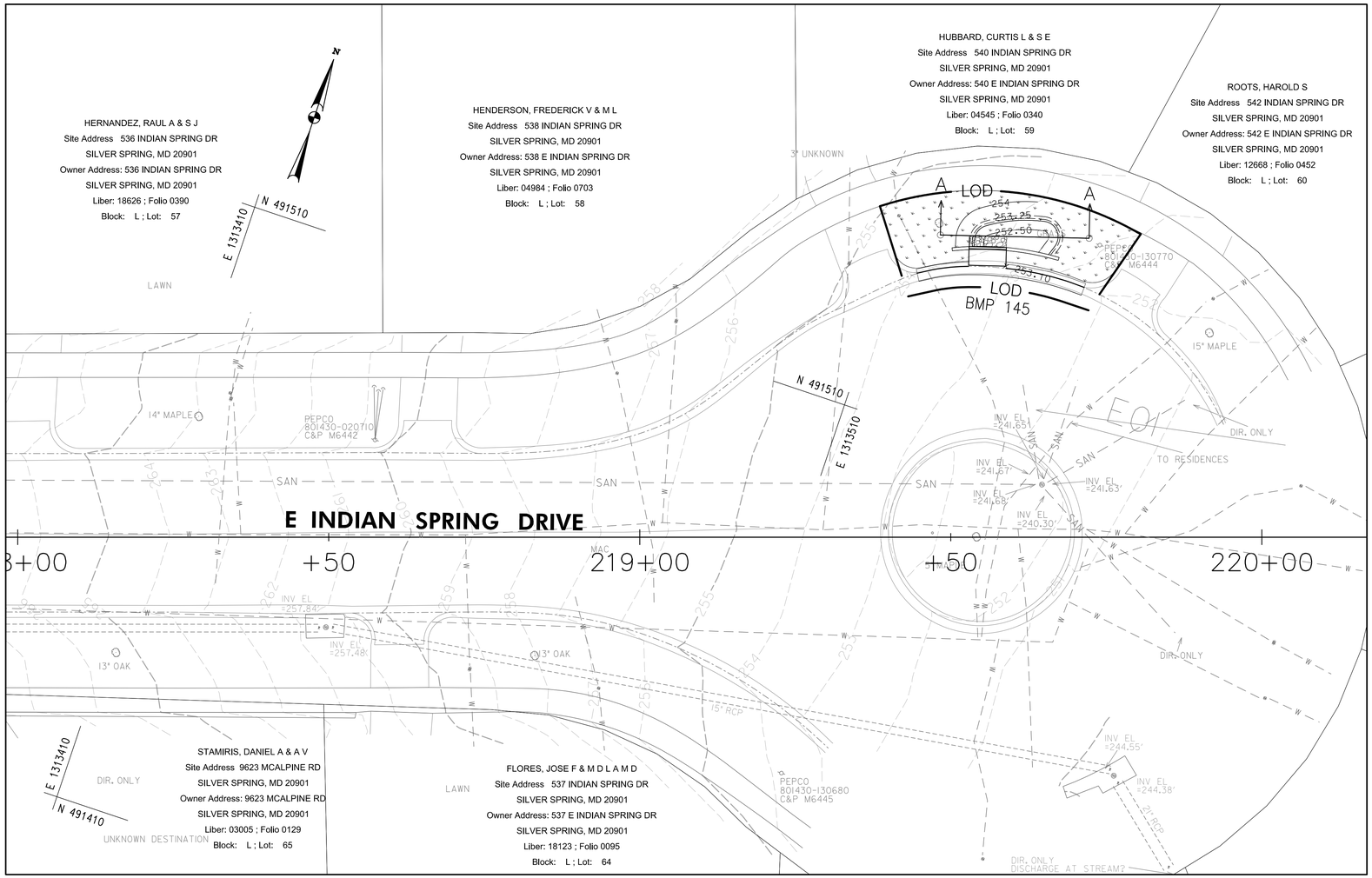

AS-BUILT DATA FOR FILTERS (BIORETENTION/RAIN GARDENS)

*TO BE COMPLETED BY THE CERTIFYING ENGINEER

TYPE OF FACILITY: RAIN GARDEN — BMP ID: 145

FEATURE	DESIGN	*AS-BUILT
DRAINAGE AREA (AC)	0.45	
TOTAL IMPERVIOUS AREA (AC)	0.19	
TREATMENT VOLUME PROVIDED (CF)	76	
TARGET WQv TREATMENT VOLUME (CF)	702	
FILTER BED AREA (SF) [1]	28	
FILTER BED SURFACE ELEVATION	252.50	
DESIGN POINT/MAX. PONDING ELEVATION	253.10	
PONDED WATER SURFACE ELEVATION AREA (SF) [2]	61	
OUTLET PIPE (UNDERDRAIN) SIZE / INVERT ELEV.	N / A	
THICKNESS OF FILTER MEDIA	REFER TO PROFILE	
PLACEMENT OF GEOTEXTILE (SIDES ONLY)	REFER TO FACILITY TYP. SECTION – SHEET 9	
PLANTINGS	REFER TO LANDSCAPE PLAN – SHEET 52	
COMPOSITION OF FILTER MEDIA	REFER TO MCDEP SPECIFICATIONS	

*NOTES:

1. "FILTER BED AREA (SF)" REPRESENTS THE EXPOSED SURFACE AREA AT THE PROPOSED "FILTER BED SURFACE ELEVATION".
2. FOR MATERIAL QUANTITY ESTIMATIONS, THE PLANTING MEDIA, STONE, MULCH, ETC. SHOULD BE BASED ON THE AREA OF "PONDED WATER SURFACE ELEVATION AREA (SF)".
3. CONTRACTOR SHALL TEST PIT UTILITIES PRIOR TO CONSTRUCTION. IF UTILITY IS UNAVOIDABLE, CONTRACTOR SHALL REFER TO SHEET 8 FOR UTILITY CROSSING DETAIL WITHIN THE FACILITY.

COMBINATION CONC. CURB AND GUTTER

STA. TO STA.	L.F.	REMARKS
219+45, LT TO 219+53, LT	8	TYPE A, MC.100.01
219+59, LT TO 219+71, LT	13	TYPE A, MC.100.01

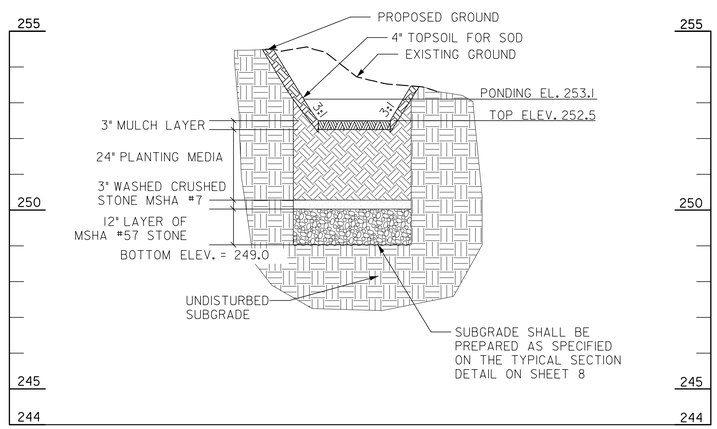

PROFILE (A-A) - RAIN GARDEN FACILITY (BMP 145)

SCALE: HORIZ. 1"=10'
VERT. 1"=2'

10' 0 10' 20'
SCALE: 1"=10'

McCormick Taylor
Engineers & Planners Since 1946
509 South Exeter Street
4th Floor
Baltimore, Maryland 21202
(410) 662-7400

PLAN AND PROFILE - BMP 145

FRANKLIN KNOLLS-PHASE 4

SLIGO (13th) ELECTION DISTRICT

PARCEL X, SUBDIVISION X, LIBER X FOLIO X

MONTGOMERY COUNTY, MARYLAND

CLIENT: MONTGOMERY COUNTY DEPT OF ENVIRONMENTAL PROTECTION
255 ROCKVILLE PIKE, RM. 120
ROCKVILLE, MD 20850-4166
MR. PAUL BOGLE, P.E.
(240) 777-7757

DESIGN	KCS
DRAFT	WJW
APPROVED	HJD
DATE	JUNE 2014
SCALE	1"=10'

SHEET 25 OF 52

FILE: 135152/13 - Roaxbury LLC – Forest Estates and the Four Corners Area\Design\Engineering\Plan\Set\FK P4\pnD-P015_FK4_BMP-145.dgn
PLOTTED: Thursday, June 05, 2014 AT 02:46 PM

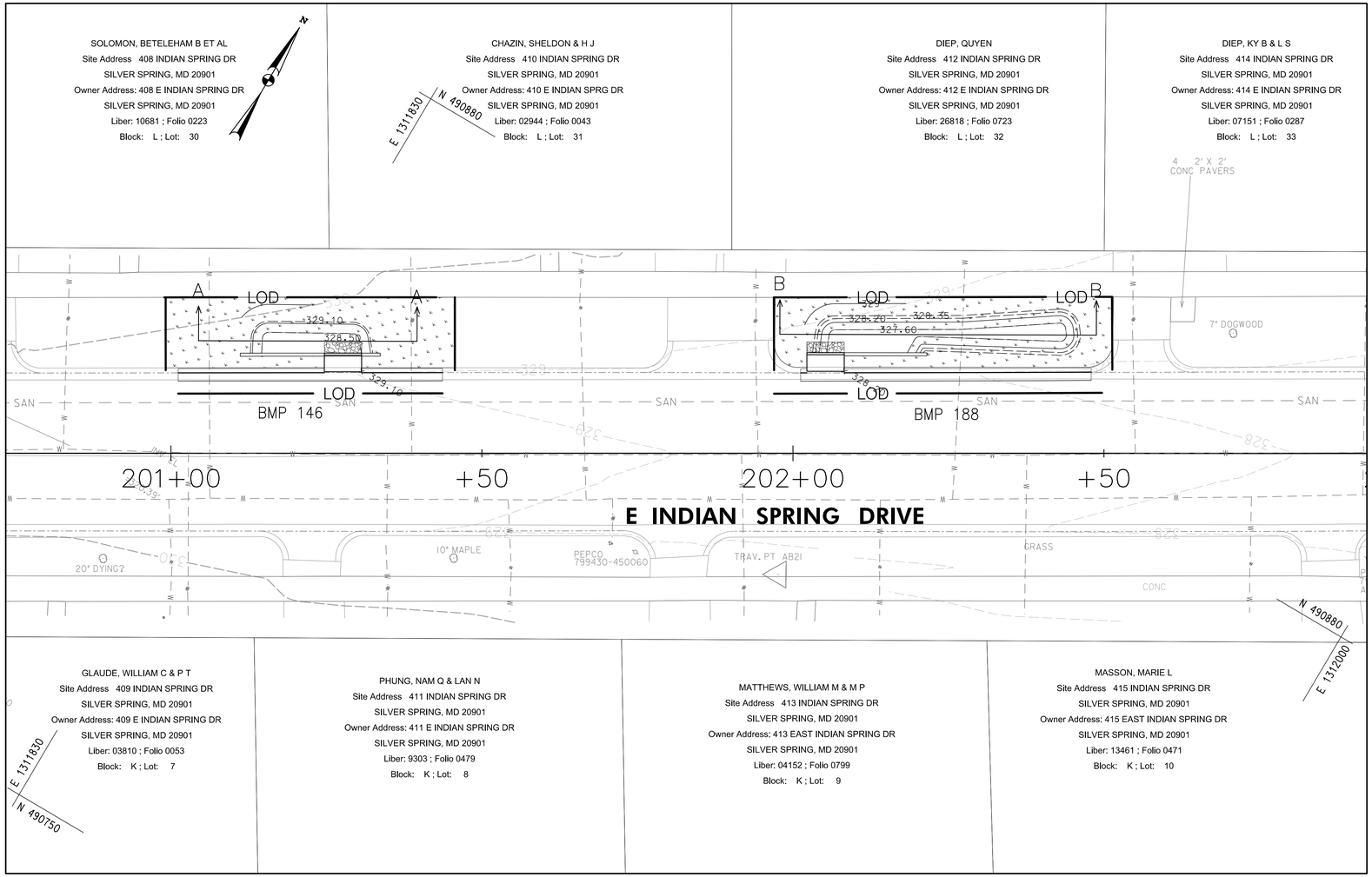

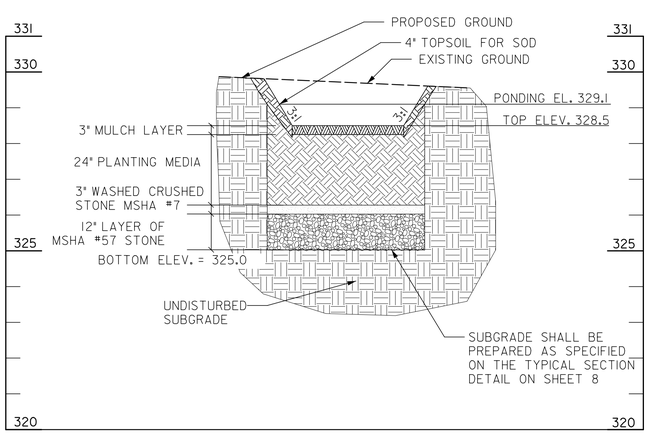

PROFILE (A-A) - RAIN GARDEN FACILITY (BMP 146)

SCALE: HORIZ. 1"=10'
VERT. 1"=2'

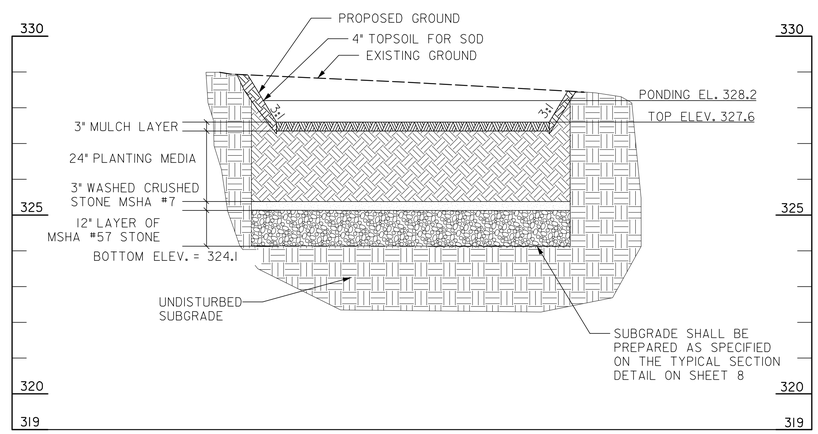

PROFILE (B-B) - RAIN GARDEN FACILITY (BMP 188)

SCALE: HORIZ. 1"=10'
VERT. 1"=2'

AS-BUILT DATA FOR FILTERS (BIORETENTION/RAIN GARDENS)

*TO BE COMPLETED BY THE CERTIFYING ENGINEER

TYPE OF FACILITY: RAIN GARDEN — BMP ID: 146

FEATURE	DESIGN	*AS-BUILT
DRAINAGE AREA (AC)	0.50	
TOTAL IMPERVIOUS AREA (AC)	0.21	
TREATMENT VOLUME PROVIDED (CF)	118	
TARGET WQv TREATMENT VOLUME (CF)	777	
FILTER BED AREA (SF) [1]	50	
FILTER BED SURFACE ELEVATION	328.50	
DESIGN POINT/MAX. PONDING ELEVATION	329.10	
PONDED WATER SURFACE ELEVATION AREA (SF) [2]	94	
OUTLET PIPE (UNDERDRAIN) SIZE / INVERT ELEV.	N / A	
THICKNESS OF FILTER MEDIA	REFER TO PROFILE	
PLACEMENT OF GEOTEXTILE (SIDES ONLY)	REFER TO FACILITY TYP. SECTION – SHEET 9	
PLANTINGS	REFER TO LANDSCAPE PLAN – SHEET 52	
COMPOSITION OF FILTER MEDIA	REFER TO MCDEP SPECIFICATIONS	

*NOTES:

1. "FILTER BED AREA (SF)" REPRESENTS THE EXPOSED SURFACE AREA AT THE PROPOSED "FILTER BED SURFACE ELEVATION".
2. FOR MATERIAL QUANTITY ESTIMATIONS, THE PLANTING MEDIA, STONE, MULCH, ETC. SHOULD BE BASED ON THE AREA OF "PONDED WATER SURFACE ELEVATION AREA (SF)".
3. CONTRACTOR SHALL TEST PIT UTILITIES PRIOR TO CONSTRUCTION. IF UTILITY IS UNAVOIDABLE, CONTRACTOR SHALL REFER TO SHEET 8 FOR UTILITY CROSSING DETAIL WITHIN THE FACILITY.

AS-BUILT DATA FOR FILTERS (BIORETENTION/RAIN GARDENS)

*TO BE COMPLETED BY THE CERTIFYING ENGINEER

TYPE OF FACILITY: xxx — BMP ID: 188

FEATURE	DESIGN	*AS-BUILT
DRAINAGE AREA (AC)	0.12	
TOTAL IMPERVIOUS AREA (AC)	0.06	
TREATMENT VOLUME PROVIDED (CF)	280	
TARGET WQv TREATMENT VOLUME (CF)	216	
FILTER BED AREA (SF) [1]	96	
FILTER BED SURFACE ELEVATION	327.60	
DESIGN POINT/MAX. PONDING ELEVATION	328.20	
PONDED WATER SURFACE ELEVATION AREA (SF) [2]	228	
OUTLET PIPE (UNDERDRAIN) SIZE / INVERT ELEV.	N / A	
THICKNESS OF FILTER MEDIA	REFER TO PROFILE	
PLACEMENT OF GEOTEXTILE (SIDES ONLY)	REFER TO FACILITY TYP. SECTION – SHEET 9	
PLANTINGS	REFER TO LANDSCAPE PLAN – SHEET 52	
COMPOSITION OF FILTER MEDIA	REFER TO MCDEP SPECIFICATIONS	

COMBINATION CONC. CURB AND GUTTER

STA. TO STA.	L.F.	REMARKS
201+01, LT TO 201+11, LT	10	TRANSITION TYPE A TO TYPE C
201+11, LT TO 201+25, LT	14	TYPE A, MC.100.01
201+31, LT TO 201+34, LT	3	TYPE A, MC.100.01
201+34, LT TO 201+44, LT	10	TRANSITION TYPE A TO TYPE C
202+01, LT TO 202+02, LT	1	TYPE A, MC.100.01
202+08, LT TO 202+38, LT	30	TYPE A, MC.100.01
202+38, LT TO 202+48, LT	10	TRANSITION TYPE A TO TYPE C

10' 0 10' 20'
SCALE: 1"=10'

McCormick Taylor
Engineers & Planners Since 1946
509 South Exater Street
4th Floor
Baltimore, Maryland 21202
(410) 662-7400

PLAN AND PROFILE - BMP 146 & 188

FRANKLIN KNOLLS-PHASE 4

SLIGO (13th) ELECTION DISTRICT

PARCEL X, SUBDIVISION X, LIBER X FOLIO X

MONTGOMERY COUNTY, MARYLAND

CLIENT: MONTGOMERY COUNTY DEPT OF ENVIRONMENTAL PROTECTION
255 ROCKVILLE PIKE, RM. 120
ROCKVILLE, MD 20850-4166
MR. PAUL BOGLE, P.E.
(240) 777-7757

DESIGN	KCS
DRAFT	WJW
APPROVED	HJD
DATE	JUNE 2014
SCALE	1"=10'

SHEET 26 OF 52

FILE: I:\51\52\13 - Roadway LID – Forest Estates and the Four Corners Area\Design\Engineering\PlanSet\FK Pkg\HD-PR19_FK4_BMP-146_188.dgn
PLOTTED: Thursday, June 05, 2014 AT 02:46 PM

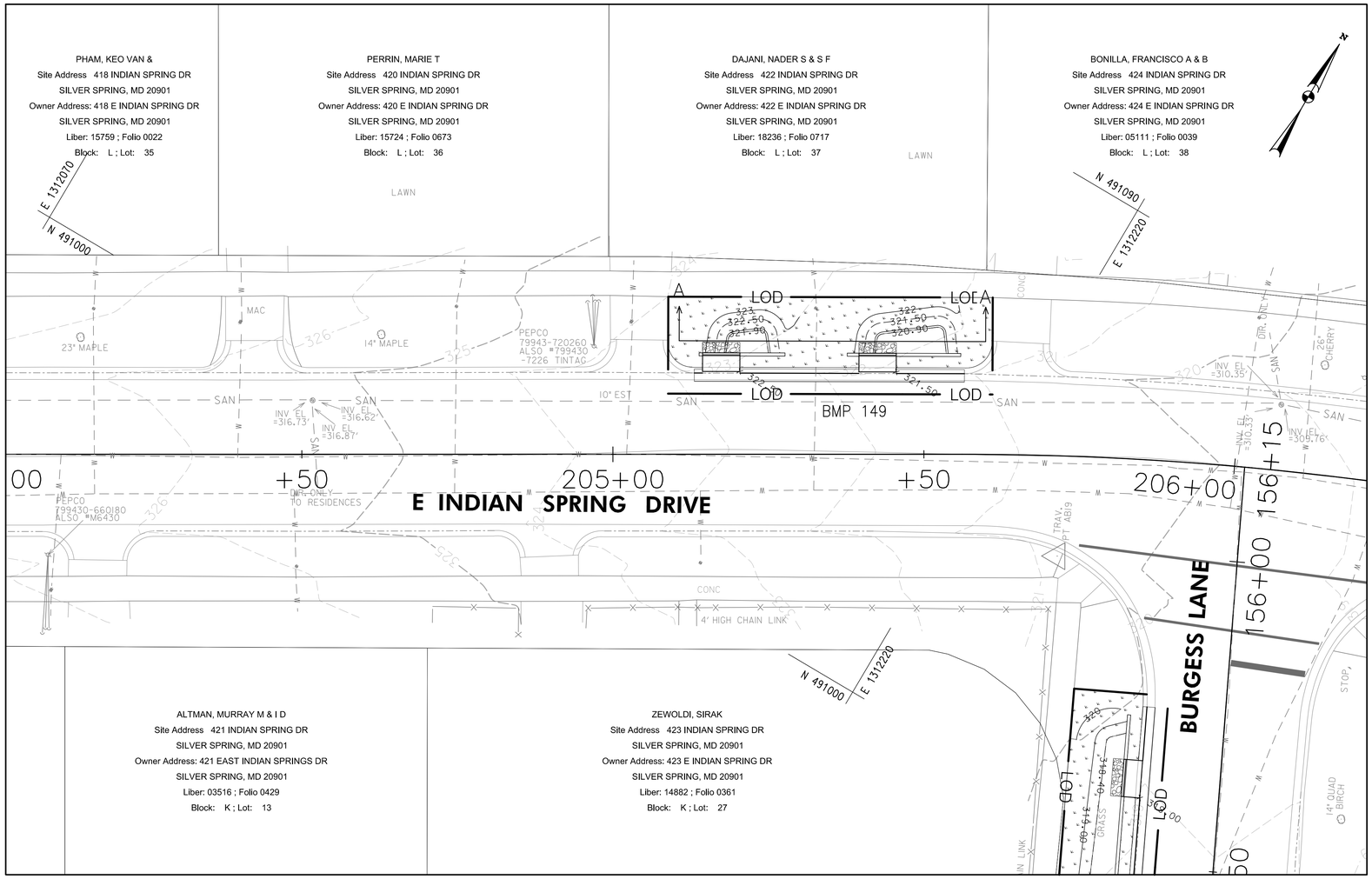

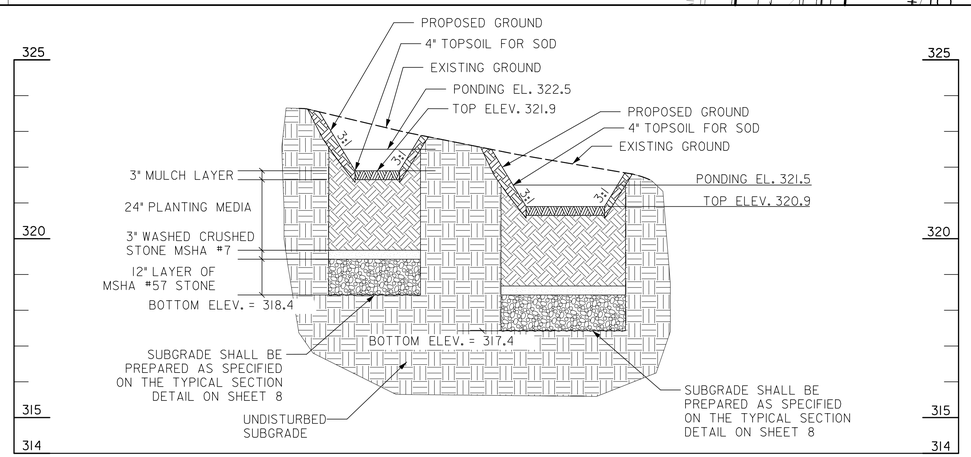

PROFILE (A-A) - RAIN GARDEN FACILITY (BMP 149)

SCALE: HORIZ. 1"=10'
VERT. 1"=2'

AS-BUILT DATA FOR FILTERS (BIORETENTION/RAIN GARDENS)

*TO BE COMPLETED BY THE CERTIFYING ENGINEER

TYPE OF FACILITY: RAIN GARDEN — BMP ID: 149

FEATURE	DESIGN	*AS-BUILT
DRAINAGE AREA (AC)	0.41	
TOTAL IMPERVIOUS AREA (AC)	0.18	
TREATMENT VOLUME PROVIDED (CF)	155	
TARGET WQv TREATMENT VOLUME (CF)	662	
FILTER BED AREA (SF) [1]	61	
FILTER BED SURFACE ELEVATION	320.90, 321.90	
DESIGN POINT/MAX. PONDING ELEVATION	321.50, 322.50	
PONDED WATER SURFACE ELEVATION AREA (SF) [2]	124	
OUTLET PIPE (UNDERDRAIN) SIZE / INVERT ELEV.	N / A	
THICKNESS OF FILTER MEDIA	REFER TO PROFILE	
PLACEMENT OF GEOTEXTILE (SIDES ONLY)	REFER TO FACILITY TYP. SECTION – SHEET 9	
PLANTINGS	REFER TO LANDSCAPE PLAN – SHEET 52	
COMPOSITION OF FILTER MEDIA	REFER TO MCDEP SPECIFICATIONS	

*NOTES:
1. "FILTER BED AREA (SF)" REPRESENTS THE EXPOSED SURFACE AREA AT THE PROPOSED "FILTER BED SURFACE ELEVATION".
2. FOR MATERIAL QUANTITY ESTIMATIONS, THE PLANTING MEDIA, STONE, MULCH, ETC. SHOULD BE BASED ON THE AREA OF "PONDED WATER SURFACE ELEVATION AREA (SF)".
3. CONTRACTOR SHALL TEST PIT UTILITIES PRIOR TO CONSTRUCTION. IF UTILITY IS UNAVOIDABLE, CONTRACTOR SHALL REFER TO SHEET 8 FOR UTILITY CROSSING DETAIL WITHIN THE FACILITY.

COMBINATION CONC. CURB AND GUTTER

STA. TO STA.	L.F.	REMARKS
205+13, LT TO 205+14, LT	1	TYPE A, MC.100.01
205+20, LT TO 205+40, LT	19	TYPE A, MC.100.01
205+46, LT TO 205+57, LT	11	TYPE A, MC.100.01

10' 0 10' 20'
SCALE: 1"=10'

McCormick Taylor
Engineers & Planners Since 1946
509 South Exeter Street
4th Floor
Baltimore, Maryland 21202
(410) 662-7400

PLAN AND PROFILE - BMP 149
FRANKLIN KNOLLS-PHASE 4
SUGO (13th) ELECTION DISTRICT
PARCEL X, SUBDIVISION X, LIBER X FOLIO X
MONTGOMERY COUNTY, MARYLAND

CLIENT: MONTGOMERY COUNTY DEPT OF ENVIRONMENTAL PROTECTION
255 ROCKVILLE PIKE, RM. 120
ROCKVILLE, MD 20850-4166
MR. PAUL BOGLE, P.E.
(240) 777-7757

DESIGN	KCS
DRAFT	WJW
APPROVED	HJD
DATE	JUNE 2014
SCALE	1"=10'

SHEET 27 OF 52

FILE: 1351213 - Roadway LID - Forest Estates and the Four Corners Area\Design\Engineering\Plan\Set\FK Pkg\HD-P002_FK4_BMP-149.dgn
PLOTTED: Thursday, June 05, 2014 AT 02:46 PM

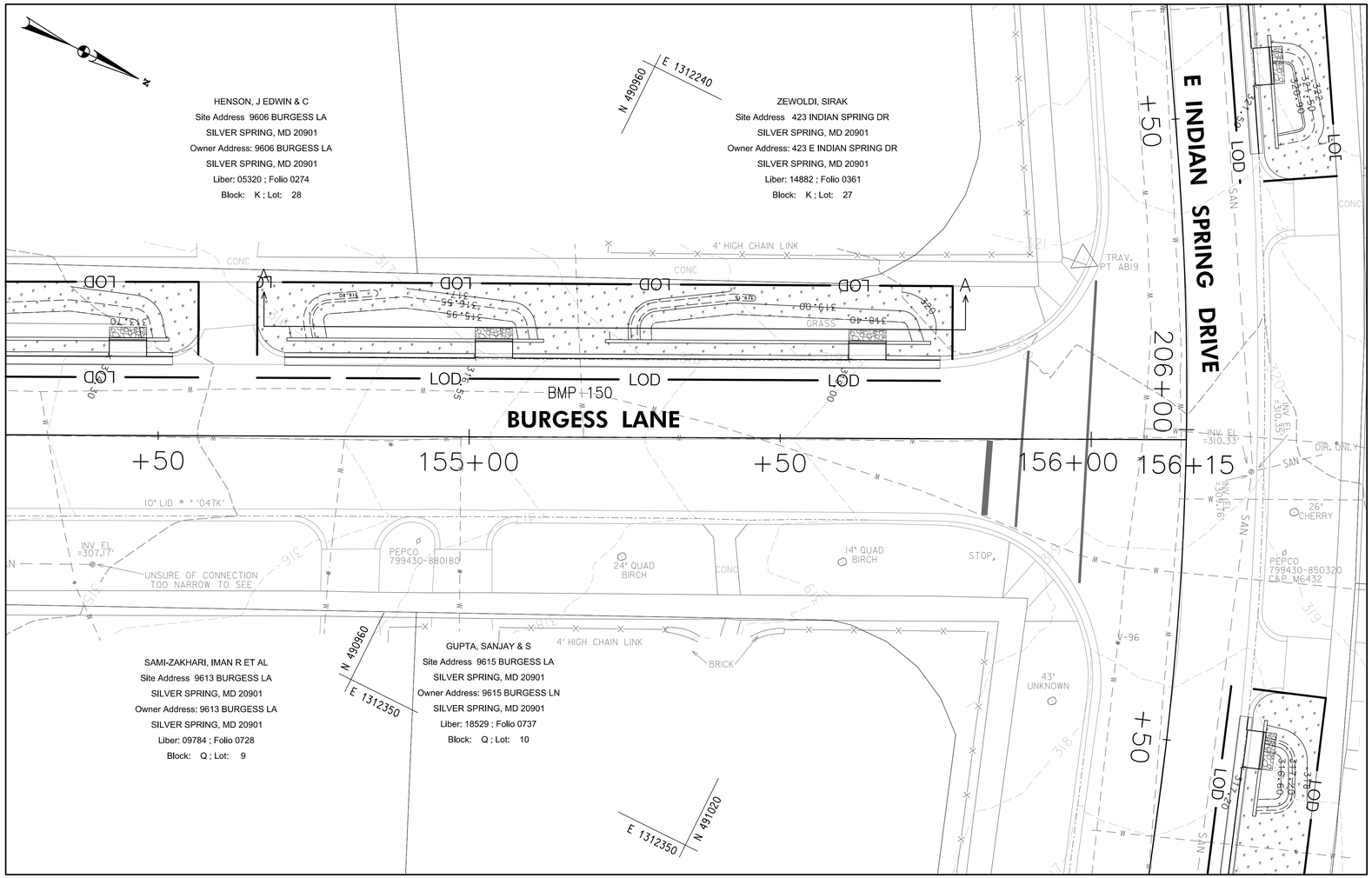

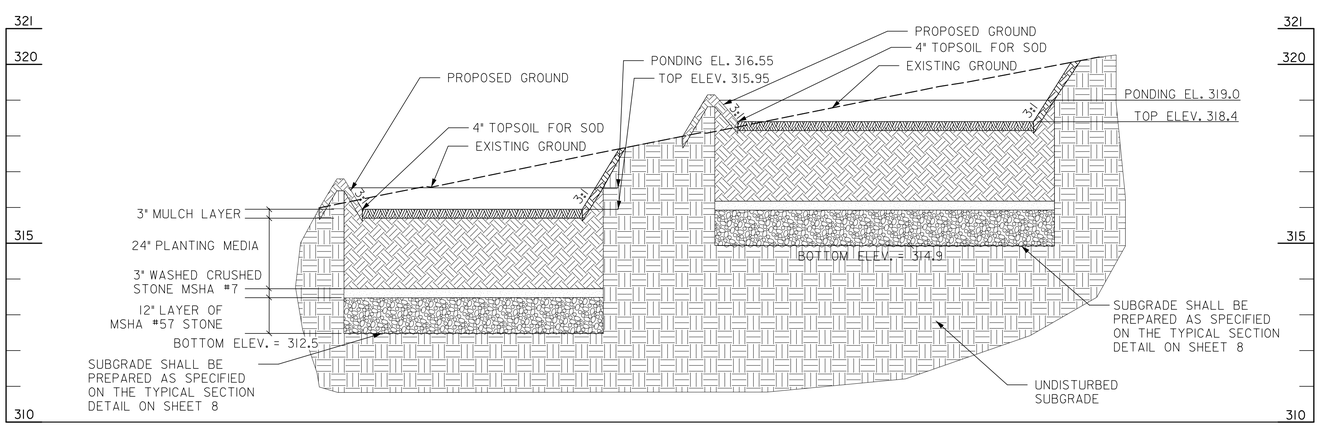

PROFILE (A-A) - RAIN GARDEN FACILITY (BMP 150)

SCALE: HORIZ. 1"=10'
VERT. 1"=2'

AS-BUILT DATA FOR FILTERS (BIORETENTION/RAIN GARDENS)

*TO BE COMPLETED BY THE CERTIFYING ENGINEER

TYPE OF FACILITY: RAIN GARDEN — BMP ID: 150

FEATURE	DESIGN	*AS-BUILT
DRAINAGE AREA (AC)	1.16	
TOTAL IMPERVIOUS AREA (AC)	0.54	
TREATMENT VOLUME PROVIDED (CF)	557	
TARGET WQv TREATMENT VOLUME (CF)	1,973	
FILTER BED AREA (SF) [1]	271	
FILTER BED SURFACE ELEVATION	318.40, 315.95	
DESIGN POINT/MAX. PONDING ELEVATION	319.00, 316.55	
PONDED WATER SURFACE ELEVATION AREA (SF) [2]	432	
OUTLET PIPE (UNDERDRAIN) SIZE / INVERT ELEV.	N / A	
THICKNESS OF FILTER MEDIA	REFER TO PROFILE	
PLACEMENT OF GEOTEXTILE (SIDES ONLY)	REFER TO FACILITY TYP. SECTION – SHEET 9	
PLANTINGS	REFER TO LANDSCAPE PLAN – SHEET 52	
COMPOSITION OF FILTER MEDIA	REFER TO MCDEP SPECIFICATIONS	

*NOTES:
1. "FILTER BED AREA (SF)" REPRESENTS THE EXPOSED SURFACE AREA AT THE PROPOSED "FILTER BED SURFACE ELEVATION".
2. FOR MATERIAL QUANTITY ESTIMATIONS, THE PLANTING MEDIA, STONE, MULCH, ETC. SHOULD BE BASED ON THE AREA OF "PONDED WATER SURFACE ELEVATION AREA (SF)".
3. CONTRACTOR SHALL TEST PIT UTILITIES PRIOR TO CONSTRUCTION. IF UTILITY IS UNAVOIDABLE, CONTRACTOR SHALL REFER TO SHEET 8 FOR UTILITY CROSSING DETAIL WITHIN THE FACILITY.

COMBINATION CONC. CURB AND GUTTER

STA. TO STA.	L.F.	REMARKS
154+70, LT TO 154+80, LT	10	TRANSITION TYPE A TO TYPE C
154+80, LT TO 155+01, LT	21	TYPE A, MC.100.01
155+07, LT TO 155+61, LT	54	TYPE A, MC.100.01
155+67, LT TO 155+76, LT	9	TYPE A, MC.100.01

10' 0 10' 20'
SCALE: 1"=10'

McCormick Taylor
Engineers & Planners Since 1946
509 South Exeter Street
4th Floor
Baltimore, Maryland 21202
(410) 662-7400

PLAN AND PROFILE - BMP 150
FRANKLIN KNOLLS-PHASE 4
SLIGO (13th) ELECTION DISTRICT
PARCEL X, SUBDIVISION X, LIBER X FOLIO X
MONTGOMERY COUNTY, MARYLAND

CLIENT: MONTGOMERY COUNTY DEPT OF ENVIRONMENTAL PROTECTION
255 ROCKVILLE PIKE, RM. 120
ROCKVILLE, MD 20850-4166
MR. PAUL BOGLE, P.E.
(240) 777-7757

DESIGN	KCS
DRAFT	WJW
APPROVED	HJD
DATE	JUNE 2014
SCALE	1"=10'

SHEET 28 OF 52

FILE: I:\5182\13 - Roadway LID - Forest Estates and the Four Corners Area\Design\Engineering\PlanSet\FK P4\grd\D-P001_FK4_BMP-150.dgn
PLOTTED: Thursday, June 05, 2014 AT 02:46 PM

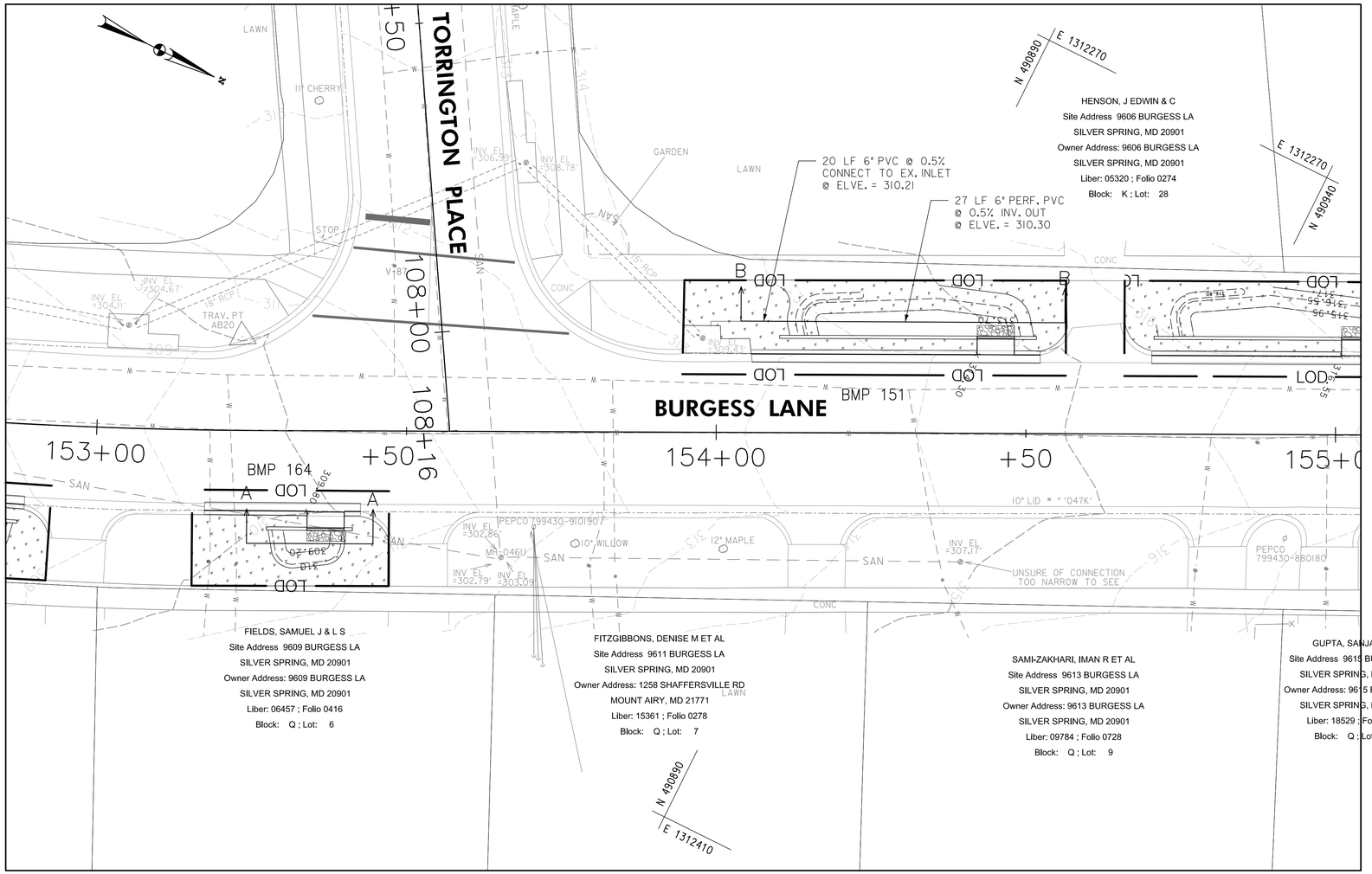

AS-BUILT DATA FOR FILTERS (BIORETENTION/RAIN GARDENS)

*TO BE COMPLETED BY THE CERTIFYING ENGINEER

TYPE OF FACILITY: BIORETENTION — BMP ID: 151

FEATURE	DESIGN	*AS-BUILT
DRAINAGE AREA (AC)	0.68	
TOTAL IMPERVIOUS AREA (AC)	0.16	
TREATMENT VOLUME PROVIDED (CF)	239	
TARGET WQv TREATMENT VOLUME (CF)	646	
FILTER BED AREA (SF) [1]	115	
FILTER BED SURFACE ELEVATION	313.70	
DESIGN POINT/MAX. PONDING ELEVATION	314.30	
PONDED WATER SURFACE ELEVATION AREA (SF) [2]	186	
OUTLET PIPE (UNDERDRAIN) SIZE / INVERT ELEV.	6" / 310.21	
THICKNESS OF FILTER MEDIA	REFER TO PROFILE	
PLACEMENT OF GEOTEXTILE (SIDES ONLY)	REFER TO FACILITY TYP. SECTION – SHEET 9	
PLANTINGS	REFER TO LANDSCAPE PLAN – SHEET 52	
COMPOSITION OF FILTER MEDIA	REFER TO MCDEP SPECIFICATIONS	

*NOTES:

1. "FILTER BED AREA (SF)" REPRESENTS THE EXPOSED SURFACE AREA AT THE PROPOSED "FILTER BED SURFACE ELEVATION".
2. FOR MATERIAL QUANTITY ESTIMATIONS, THE PLANTING MEDIA, STONE, MULCH, ETC. SHOULD BE BASED ON THE AREA OF "PONDED WATER SURFACE ELEVATION AREA (SF)".
3. CONTRACTOR SHALL TEST PIT UTILITIES PRIOR TO CONSTRUCTION. IF UTILITY IS UNAVOIDABLE, CONTRACTOR SHALL REFER TO SHEET 8 FOR UTILITY CROSSING DETAIL WITHIN THE FACILITY.

COMBINATION CONC. CURB AND GUTTER

STA. TO STA.	L.F.	REMARKS
154+06, LT TO 154+42, LT	36	TYPE A, MC.100.01
154+48, LT TO 154+52, LT	4	TYPE A, MC.100.01
153+18, RT TO 153+27, RT	10	TRANSITION TYPE A TO TYPE C
153+27, RT TO 153+34, RT	7	TYPE A, MC.100.01
153+40, RT TO 153+43, RT	3	TYPE A, MC.100.01

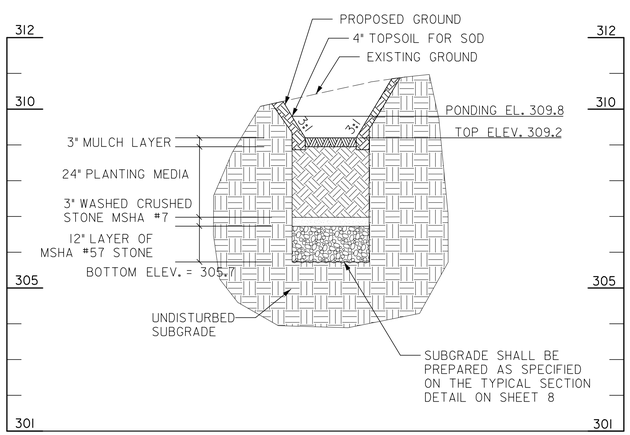

PROFILE (A-A) - RAIN GARDEN FACILITY (BMP 164)

SCALE: HORIZ. 1"=10'
VERT. 1"=2'

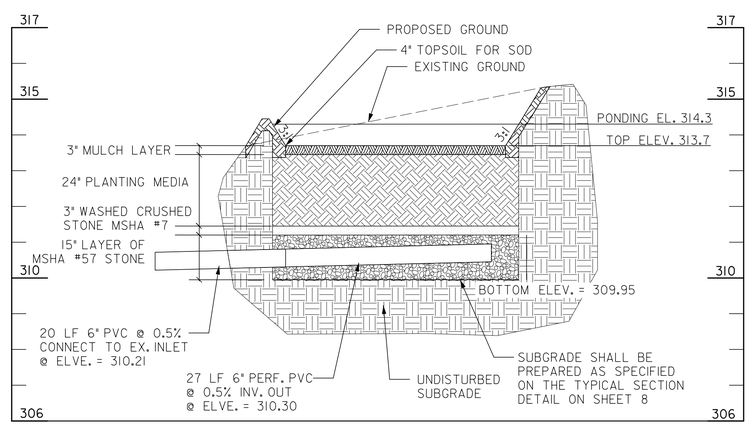

PROFILE (B-B) - RAIN GARDEN FACILITY (BMP 151)

SCALE: HORIZ. 1"=10'
VERT. 1"=2'

AS-BUILT DATA FOR FILTERS (BIORETENTION/RAIN GARDENS)

*TO BE COMPLETED BY THE CERTIFYING ENGINEER

TYPE OF FACILITY: RAIN GARDEN — BMP ID: 164

FEATURE	DESIGN	*AS-BUILT
DRAINAGE AREA (AC)	0.35	
TOTAL IMPERVIOUS AREA (AC)	0.14	
TREATMENT VOLUME PROVIDED (CF)	67	
TARGET WQv TREATMENT VOLUME (CF)	521	
FILTER BED AREA (SF) [1]	25	
FILTER BED SURFACE ELEVATION	309.20	
DESIGN POINT/MAX. PONDING ELEVATION	309.80	
PONDED WATER SURFACE ELEVATION AREA (SF) [2]	54	
OUTLET PIPE (UNDERDRAIN) SIZE / INVERT ELEV.	N / A	
THICKNESS OF FILTER MEDIA	REFER TO PROFILE	
PLACEMENT OF GEOTEXTILE (SIDES ONLY)	REFER TO FACILITY TYP. SECTION – SHEET 9	
PLANTINGS	REFER TO LANDSCAPE PLAN – SHEET 52	
COMPOSITION OF FILTER MEDIA	REFER TO MCDEP SPECIFICATIONS	

10' 0 10' 20'
SCALE: 1"=10'

McCormick Taylor
Engineers & Planners Since 1946
509 South Exeter Street
4th Floor
Baltimore, Maryland 21202
(410) 662-7400

PLAN AND PROFILE - BMP 151 & 164

FRANKLIN KNOLLS-PHASE 4

SLIGO (13th) ELECTION DISTRICT

PARCEL X, SUBDIVISION X, LIBER X FOLIO X

MONTGOMERY COUNTY, MARYLAND

CLIENT: MONTGOMERY COUNTY DEPT OF ENVIRONMENTAL PROTECTION
255 ROCKVILLE PIKE, RM. 120
ROCKVILLE, MD 20850-4166
MR. PAUL BOGLE, P.E.
(240) 777-7757

DESIGN	KCS
DRAFT	WJW
APPROVED	HJD
DATE	JUNE 2014
SCALE	1"=10'

SHEET 29 OF 52

FILE: I:\5182\13 - Roadway LID - Forest Estates and the Four Corners Area\Design\Engineering\PlanSet\FK P4\pr\D-P002_FK4_BMP-151_164.dgn
PLOTTED: Thursday, June 05, 2014 AT 02:46 PM

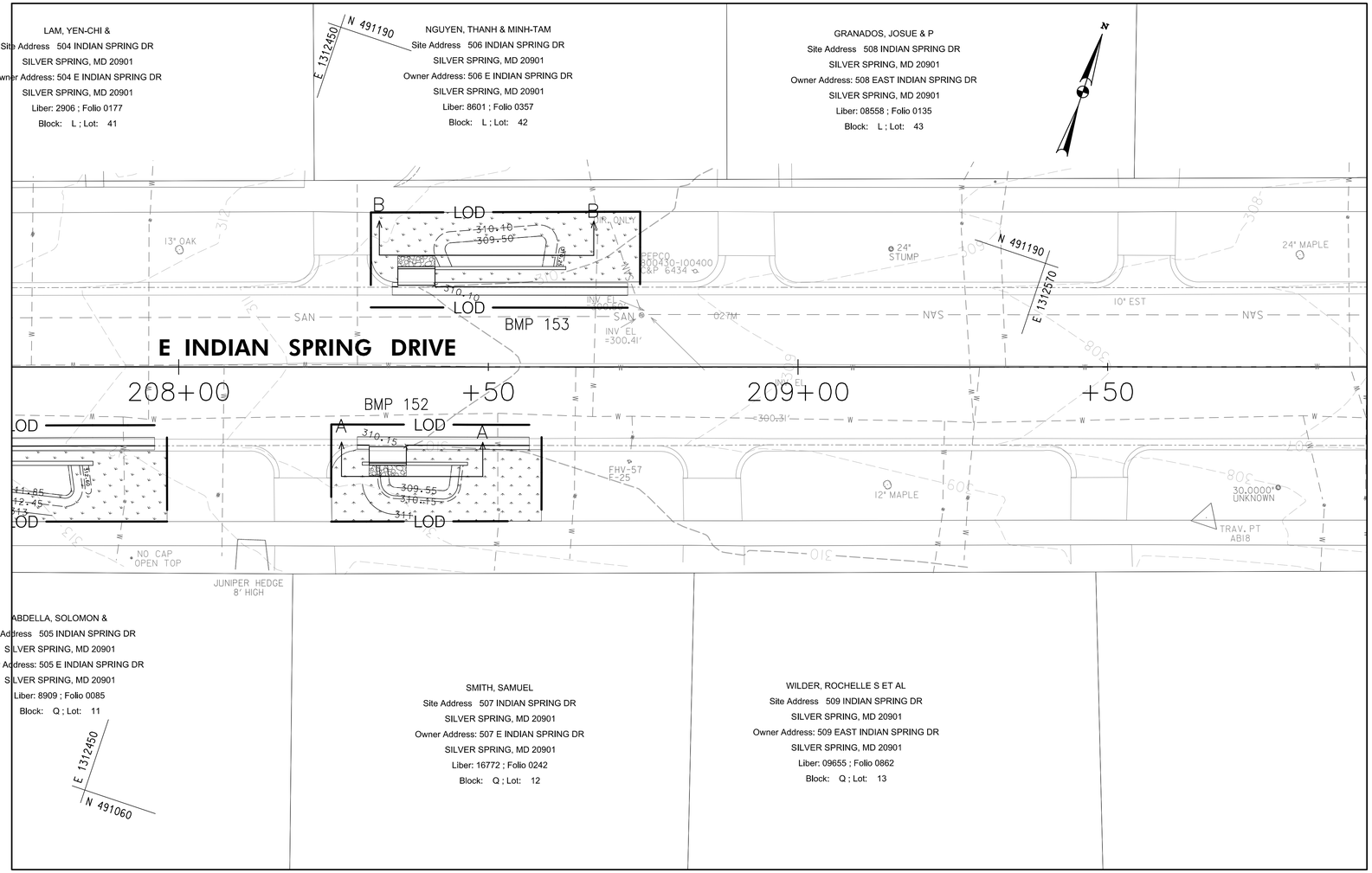

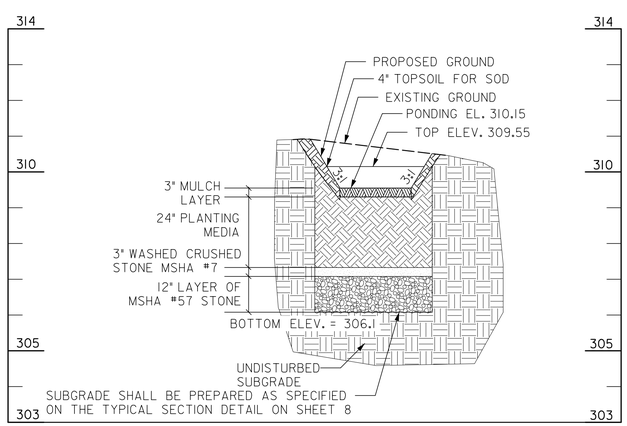

PROFILE (A-A) - RAIN GARDEN FACILITY (BMP 152)

SCALE: HORIZ. 1"=10'
VERT. 1"=2'

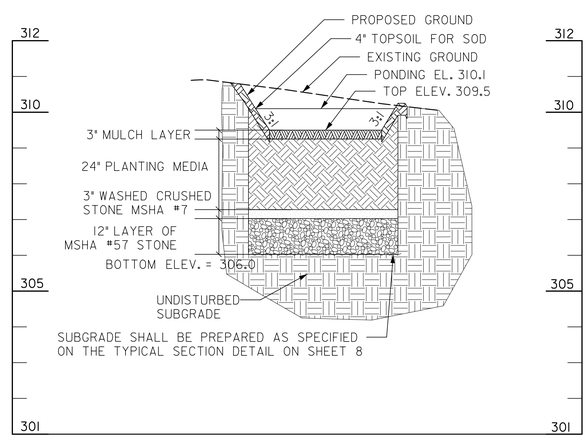

PROFILE (B-B) - RAIN GARDEN FACILITY (BMP 153)

SCALE: HORIZ. 1"=10'
VERT. 1"=2'

AS-BUILT DATA FOR FILTERS (BIORETENTION/RAIN GARDENS)

*TO BE COMPLETED BY THE CERTIFYING ENGINEER

TYPE OF FACILITY: RAIN GARDEN — BMP ID: 152

FEATURE	DESIGN	*AS-BUILT
DRAINAGE AREA (AC)	0.12	
TOTAL IMPERVIOUS AREA (AC)	0.04	
TREATMENT VOLUME PROVIDED (CF)	92	
TARGET WQv TREATMENT VOLUME (CF)	152	
FILTER BED AREA (SF) [1]	38	
FILTER BED SURFACE ELEVATION	309.55	
DESIGN POINT/MAX. PONDING ELEVATION	310.15	
PONDED WATER SURFACE ELEVATION AREA (SF) [2]	73	
OUTLET PIPE (UNDERDRAIN) SIZE / INVERT ELEV.	N / A	
THICKNESS OF FILTER MEDIA	REFER TO PROFILE	
PLACEMENT OF GEOTEXTILE (SIDES ONLY)	REFER TO FACILITY TYP. SECTION – SHEET 9	
PLANTINGS	REFER TO LANDSCAPE PLAN – SHEET 52	
COMPOSITION OF FILTER MEDIA	REFER TO MCDEP SPECIFICATIONS	

*NOTES:

1. "FILTER BED AREA (SF)" REPRESENTS THE EXPOSED SURFACE AREA AT THE PROPOSED "FILTER BED SURFACE ELEVATION".
2. FOR MATERIAL QUANTITY ESTIMATIONS, THE PLANTING MEDIA, STONE, MULCH, ETC. SHOULD BE BASED ON THE AREA OF "PONDED WATER SURFACE ELEVATION AREA (SF)".
3. CONTRACTOR SHALL TEST PIT UTILITIES PRIOR TO CONSTRUCTION. IF UTILITY IS UNAVOIDABLE, CONTRACTOR SHALL REFER TO SHEET 8 FOR UTILITY CROSSING DETAIL WITHIN THE FACILITY.

AS-BUILT DATA FOR FILTERS (BIORETENTION/RAIN GARDENS)

*TO BE COMPLETED BY THE CERTIFYING ENGINEER

TYPE OF FACILITY: RAIN GARDEN — BMP ID: 153

FEATURE	DESIGN	*AS-BUILT
DRAINAGE AREA (AC)	0.32	
TOTAL IMPERVIOUS AREA (AC)	0.13	
TREATMENT VOLUME PROVIDED (CF)	151	
TARGET WQv TREATMENT VOLUME (CF)	851	
FILTER BED AREA (SF) [1]	69	
FILTER BED SURFACE ELEVATION	309.50	
DESIGN POINT/MAX. PONDING ELEVATION	310.10	
PONDED WATER SURFACE ELEVATION AREA (SF) [2]	118	
OUTLET PIPE (UNDERDRAIN) SIZE / INVERT ELEV.	N / A	
THICKNESS OF FILTER MEDIA	REFER TO PROFILE	
PLACEMENT OF GEOTEXTILE (SIDES ONLY)	REFER TO FACILITY TYP. SECTION – SHEET 9	
PLANTINGS	REFER TO LANDSCAPE PLAN – SHEET 52	
COMPOSITION OF FILTER MEDIA	REFER TO MCDEP SPECIFICATIONS	

COMBINATION CONC. CURB AND GUTTER

STA. TO STA.	L.F.	REMARKS
208+29, RT TO 208+31, RT	2	TYPE A, MC.100.01
208+37, RT TO 208+47, RT	10	TYPE A, MC.100.01
208+47, RT TO 208+57, RT	10	TRANSITION TYPE A TO TYPE C
208+34, LT TO 208+35, LT	1	TYPE A, MC.100.01
208+41, LT TO 208+63, LT	21	TYPE A, MC.100.01
208+63, LT TO 208+73, LT	10	TRANSITION TYPE A TO TYPE C

10' 0 10' 20'
SCALE: 1"=10'

509 South Exeter Street
4th Floor
Baltimore, Maryland 21202
(410) 662-7400

McCormick Taylor
Engineers & Planners
Since 1946

PLAN AND PROFILE - BMP 152 & 153

FRANKLIN KNOLLS-PHASE 4
SLIGO (13th) ELECTION DISTRICT
PARCEL X, SUBDIVISION X, LIBER X FOLIO X
MONTGOMERY COUNTY, MARYLAND

CLIENT: MONTGOMERY COUNTY DEPT OF ENVIRONMENTAL PROTECTION
255 ROCKVILLE PIKE, RM. 120
ROCKVILLE, MD 20850-4166
MR. PAUL BOGLE, P.E.
(240) 777-7757

DESIGN	KCS
DRAFT	WJW
APPROVED	HJD
DATE	JUNE 2014
SCALE	1"=10'

SHEET 30 OF 52

FILE: I:\5192\13 - Roadway LID - Forest Estates and the Four Corners Area\Design\Engineering\PlanSet\FK P4\pnl\D-P024_FK4_BMP-152_153.dgn
PLOTTED: Thursday, June 05, 2014 AT 02:46 PM

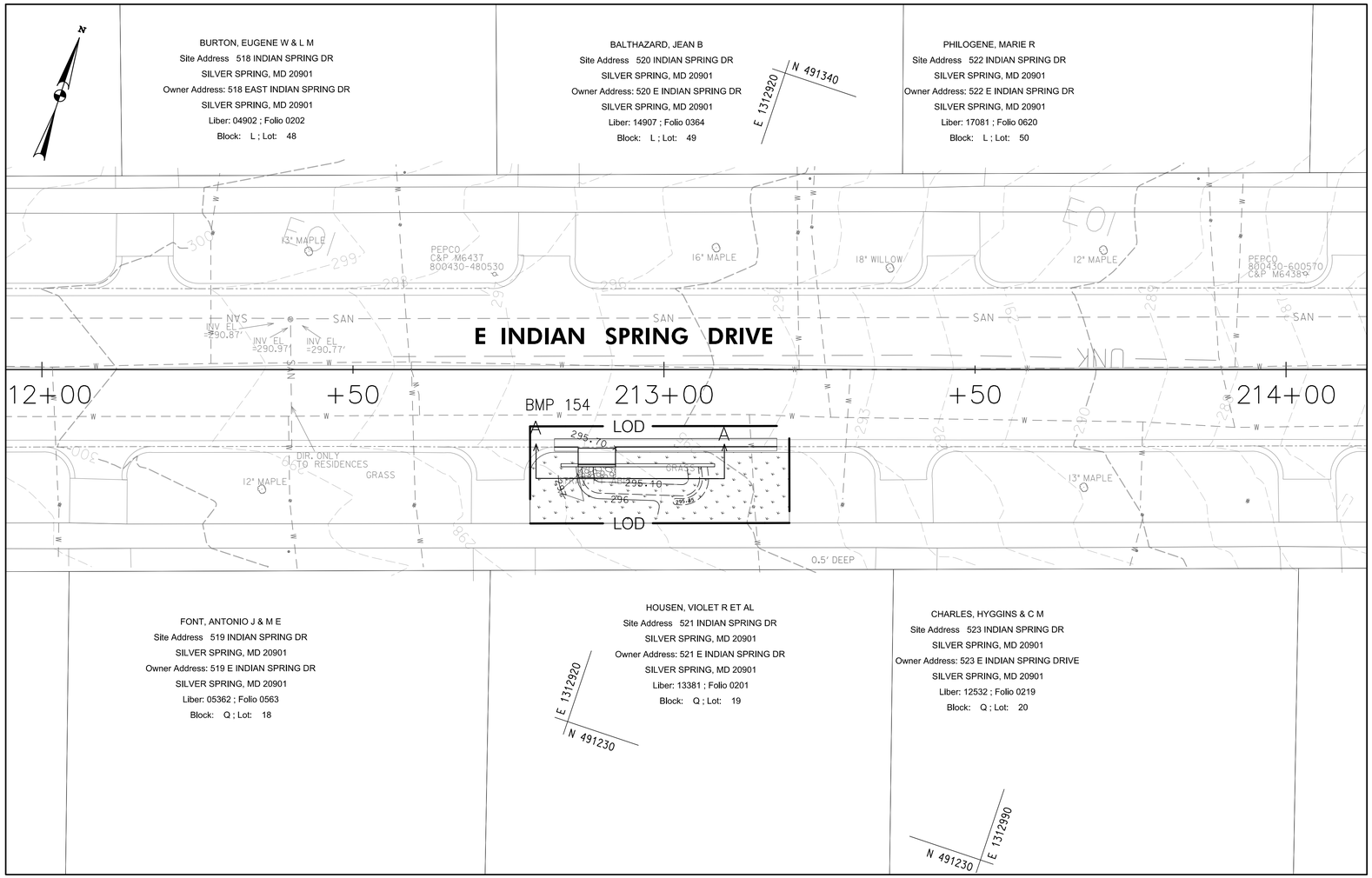

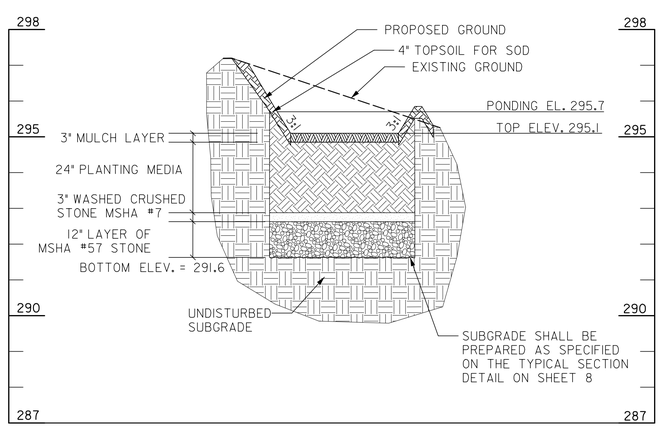

PROFILE (A-A) - RAIN GARDEN FACILITY (BMP 154)

SCALE: HORIZ. 1"=10'
VERT. 1"=2'

AS-BUILT DATA FOR FILTERS (BIORETENTION/RAIN GARDENS)

*TO BE COMPLETED BY THE CERTIFYING ENGINEER

TYPE OF FACILITY: RAIN GARDEN — BMP ID: 154

FEATURE	DESIGN	*AS-BUILT
DRAINAGE AREA (AC)	0.55	
TOTAL IMPERVIOUS AREA (AC)	0.23	
TREATMENT VOLUME PROVIDED (CF)	100	
TARGET WQv TREATMENT VOLUME (CF)	851	
FILTER BED AREA (SF) [1]	40	
FILTER BED SURFACE ELEVATION	295.10	
DESIGN POINT/MAX. PONDING ELEVATION	295.70	
PONDED WATER SURFACE ELEVATION AREA (SF) [2]	80	
OUTLET PIPE (UNDERDRAIN) SIZE / INVERT ELEV.	N / A	
THICKNESS OF FILTER MEDIA	REFER TO PROFILE	
PLACEMENT OF GEOTEXTILE (SIDES ONLY)	REFER TO FACILITY TYP. SECTION – SHEET 9	
PLANTINGS	REFER TO LANDSCAPE PLAN – SHEET 52	
COMPOSITION OF FILTER MEDIA	REFER TO MCDEP SPECIFICATIONS	

*NOTES:

1. "FILTER BED AREA (SF)" REPRESENTS THE EXPOSED SURFACE AREA AT THE PROPOSED "FILTER BED SURFACE ELEVATION".
2. FOR MATERIAL QUANTITY ESTIMATIONS, THE PLANTING MEDIA, STONE, MULCH, ETC. SHOULD BE BASED ON THE AREA OF "PONDED WATER SURFACE ELEVATION AREA (SF)".
3. CONTRACTOR SHALL TEST PIT UTILITIES PRIOR TO CONSTRUCTION. IF UTILITY IS UNAVOIDABLE, CONTRACTOR SHALL REFER TO SHEET 8 FOR UTILITY CROSSING DETAIL WITHIN THE FACILITY.

COMBINATION CONC. CURB AND GUTTER

STA. TO STA.	L.F.	REMARKS
212+82, RT TO 212+86, RT	4	TYPE A, MC.100.01
212+92, RT TO 213+08, RT	16	TYPE A, MC.100.01
213+08, RT TO 213+18, RT	10	TRANSITION TYPE A TO TYPE C

10' 0 10' 20'
SCALE: 1"=10'

McCormick Taylor
Engineers & Planners Since 1946
509 South Exeter Street
4th Floor
Baltimore, Maryland 21202
(410) 662-7400

PLAN AND PROFILE - BMP 154

FRANKLIN KNOLLS-PHASE 4

SLIGO (13th) ELECTION DISTRICT

PARCEL X, SUBDIVISION X, LIBER X FOLIO X

MONTGOMERY COUNTY, MARYLAND

CLIENT: MONTGOMERY COUNTY DEPT OF ENVIRONMENTAL PROTECTION
255 ROCKVILLE PIKE, RM. 120
ROCKVILLE, MD 20850-4166
MR. PAUL BOGLE, P.E.
(240) 777-7757

DESIGN	KCS
DRAFT	WJW
APPROVED	HJD
DATE	JUNE 2014
SCALE	1"=10'

SHEET 31 OF 52

FILE: I:\5182\13 - Roadway LID - Forest Estates and the Four Corners Area\Design\Engineering\PlanSet\FK P4\gr4D-P025_FK4_BMP-154.dgn
PLOTTED: Thursday, June 05, 2014 AT 02:46 PM

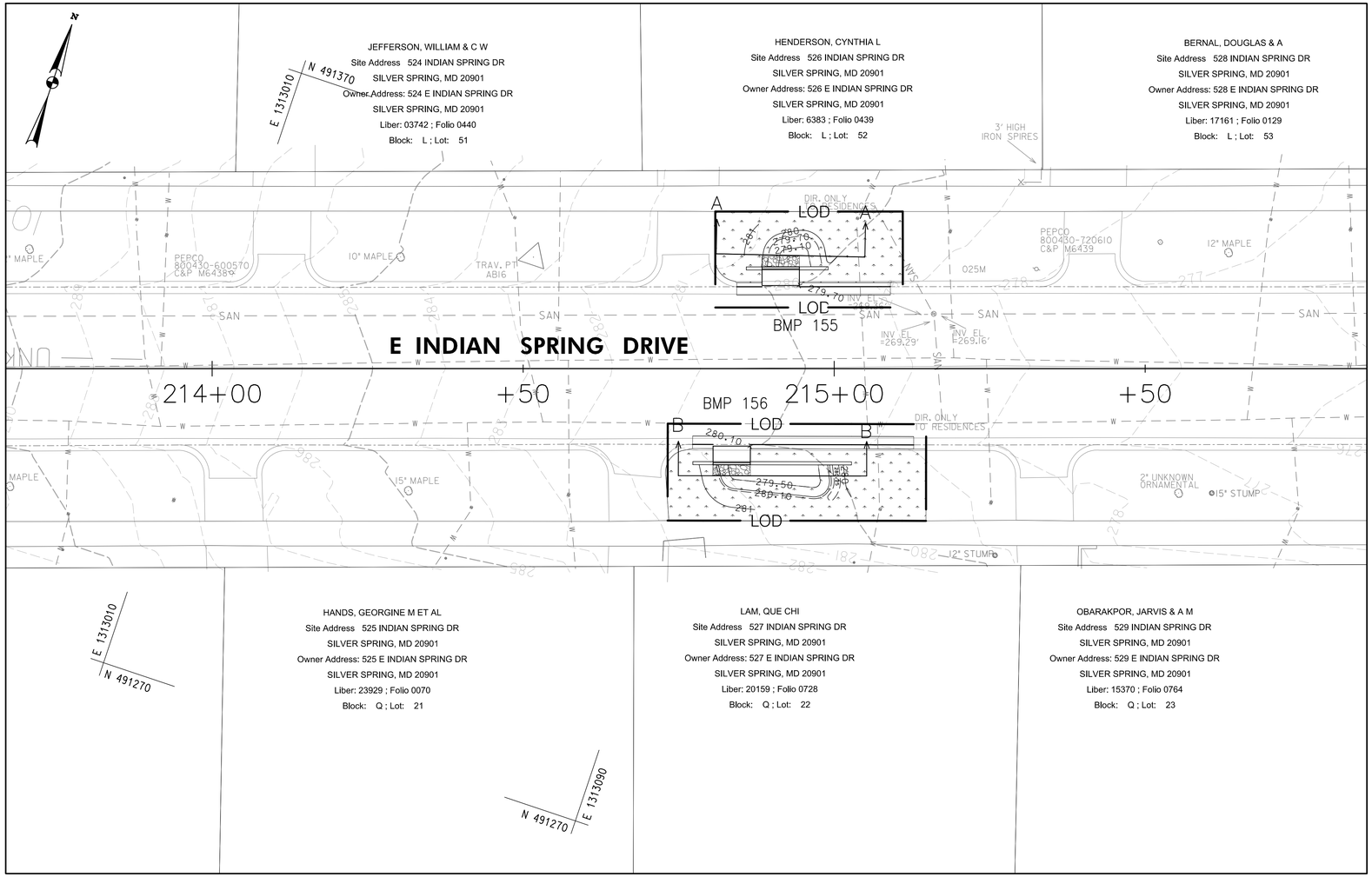

AS-BUILT DATA FOR FILTERS (BIORETENTION/RAIN GARDENS)

*TO BE COMPLETED BY THE CERTIFYING ENGINEER

TYPE OF FACILITY: RAIN GARDEN — BMP ID: 155

FEATURE	DESIGN	*AS-BUILT
DRAINAGE AREA (AC)	0.66	
TOTAL IMPERVIOUS AREA (AC)	0.24	
TREATMENT VOLUME PROVIDED (CF)	105	
TARGET WQv TREATMENT VOLUME (CF)	904	
FILTER BED AREA (SF) [1]	43	
FILTER BED SURFACE ELEVATION	279.10	
DESIGN POINT/MAX. PONDING ELEVATION	279.70	
PONDED WATER SURFACE ELEVATION AREA (SF) [2]	84	
OUTLET PIPE (UNDERDRAIN) SIZE / INVERT ELEV.	N / A	
THICKNESS OF FILTER MEDIA	REFER TO PROFILE	
PLACEMENT OF GEOTEXTILE (SIDES ONLY)	REFER TO FACILITY TYP. SECTION – SHEET 9	
PLANTINGS	REFER TO LANDSCAPE PLAN – SHEET 52	
COMPOSITION OF FILTER MEDIA	REFER TO MCDEP SPECIFICATIONS	

*NOTES:

1. "FILTER BED AREA (SF)" REPRESENTS THE EXPOSED SURFACE AREA AT THE PROPOSED "FILTER BED SURFACE ELEVATION".
2. FOR MATERIAL QUANTITY ESTIMATIONS, THE PLANTING MEDIA, STONE, MULCH, ETC. SHOULD BE BASED ON THE AREA OF "PONDED WATER SURFACE ELEVATION AREA (SF)".
3. CONTRACTOR SHALL TEST PIT UTILITIES PRIOR TO CONSTRUCTION. IF UTILITY IS UNAVOIDABLE, CONTRACTOR SHALL REFER TO SHEET 8 FOR UTILITY CROSSING DETAIL WITHIN THE FACILITY.

AS-BUILT DATA FOR FILTERS (BIORETENTION/RAIN GARDENS)

*TO BE COMPLETED BY THE CERTIFYING ENGINEER

TYPE OF FACILITY: RAIN GARDEN — BMP ID: 156

FEATURE	DESIGN	*AS-BUILT
DRAINAGE AREA (AC)	0.62	
TOTAL IMPERVIOUS AREA (AC)	0.26	
TREATMENT VOLUME PROVIDED (CF)	81	
TARGET WQv TREATMENT VOLUME (CF)	960	
FILTER BED AREA (SF) [1]	32	
FILTER BED SURFACE ELEVATION	279.50	
DESIGN POINT/MAX. PONDING ELEVATION	280.10	
PONDED WATER SURFACE ELEVATION AREA (SF) [2]	65	
OUTLET PIPE (UNDERDRAIN) SIZE / INVERT ELEV.	N / A	
THICKNESS OF FILTER MEDIA	REFER TO PROFILE	
PLACEMENT OF GEOTEXTILE (SIDES ONLY)	REFER TO FACILITY TYP. SECTION – SHEET 9	
PLANTINGS	REFER TO LANDSCAPE PLAN – SHEET 52	
COMPOSITION OF FILTER MEDIA	REFER TO MCDEP SPECIFICATIONS	

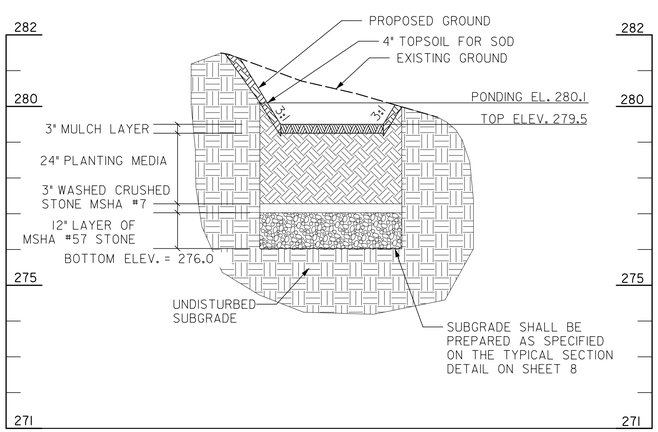

PROFILE (A-A) - RAIN GARDEN FACILITY (BMP 155)

SCALE: HORIZ. 1"=10'
VERT. 1"=2'

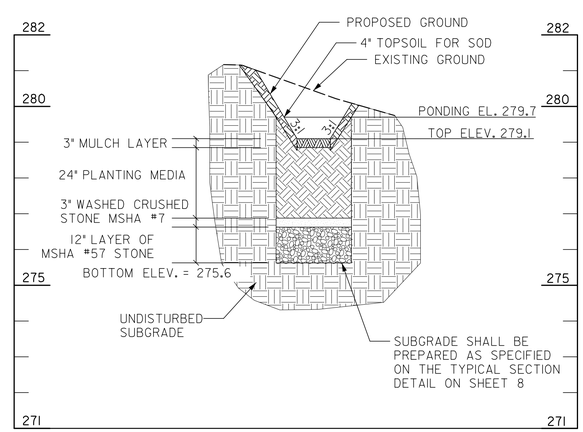

PROFILE (B-B) - RAIN GARDEN FACILITY (BMP 156)

SCALE: HORIZ. 1"=10'
VERT. 1"=2'

COMBINATION CONC. CURB AND GUTTER

STA. TO STA.	L.F.	REMARKS
214+84, LT TO 214+88, LT	4	TYPE A, MC.100.01
214+94, LT TO 214+99, LT	5	TYPE A, MC.100.01
214+99, LT TO 215+09, LT	10	TRANSITION TYPE A TO TYPE C
214+77, RT TO 214+81, RT	3	TYPE A, MC.100.01
214+87, RT TO 215+03, RT	16	TYPE A, MC.100.01
215+03, RT TO 215+13, RT	10	TRANSITION TYPE A TO TYPE C

10' 0 10' 20'
SCALE: 1"=10'

509 South Exeter Street
4th Floor
Baltimore, Maryland 21202
(410) 662-7400

McCormick Taylor
Engineers & Planners
Since 1946

PLAN AND PROFILE - BMP 155 & 156

FRANKLIN KNOLLS-PHASE 4

SLIGO (13th) ELECTION DISTRICT

PARCEL X, SUBDIVISION X, LIBER X FOLIO X

MONTGOMERY COUNTY, MARYLAND

CLIENT: MONTGOMERY COUNTY DEPT OF ENVIRONMENTAL PROTECTION
255 ROCKVILLE PIKE, RM. 120
ROCKVILLE, MD 20850-4166
MR. PAUL BOGLE, P.E.
(240) 777-7757

DESIGN	KCS
DRAFT	WJW
APPROVED	HJD
DATE	JUNE 2014
SCALE	1"=10'

SHEET 32 OF 52

FILE: I:\51\52\13 - Roadway LID – Forest Estates and the Four Corners Area\Design\Engineering\PlanSet\FK Ph4\HD-P\026_FK4_BMP-155_156.dgn
PLOTTED: Thursday, June 05, 2014 AT 02:46 PM

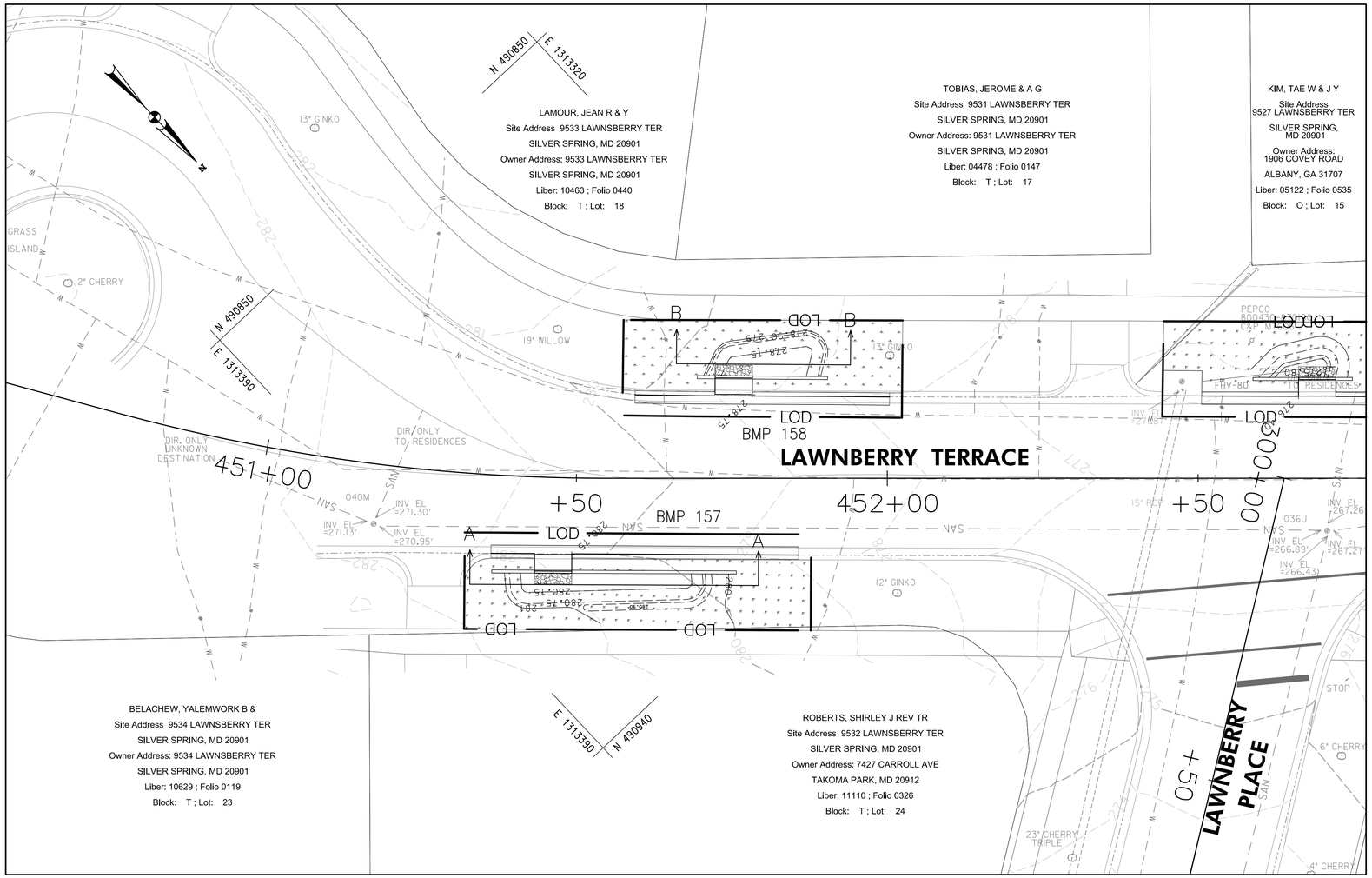

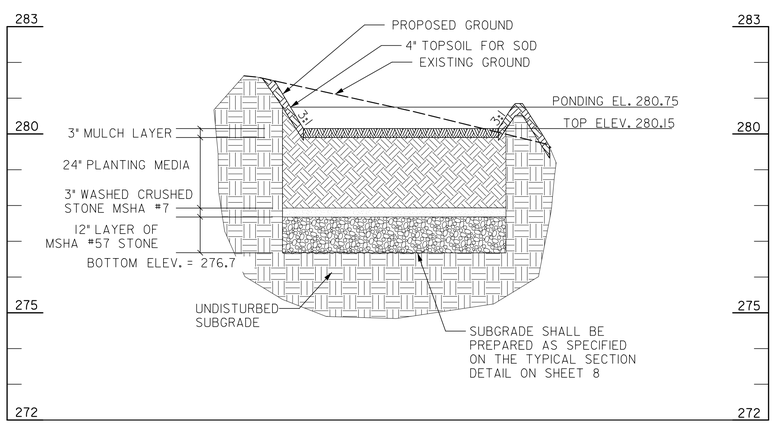

PROFILE (A-A) - RAIN GARDEN FACILITY (BMP 157)

SCALE: HORIZ. 1"=10'
VERT. 1"=2'

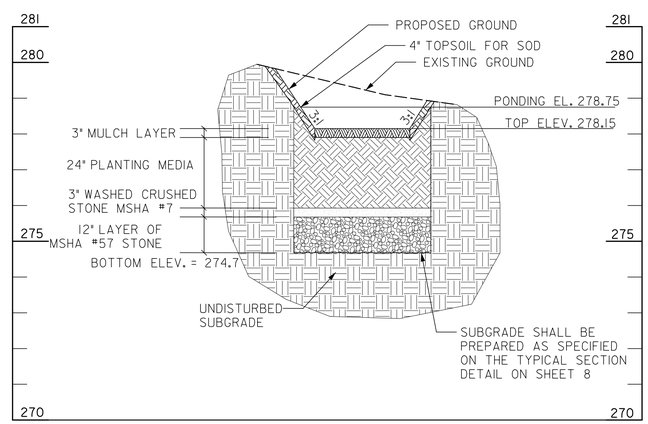

PROFILE (B-B) - RAIN GARDEN FACILITY (BMP 158)

SCALE: HORIZ. 1"=10'
VERT. 1"=2'

AS-BUILT DATA FOR FILTERS (BIORETENTION/RAIN GARDENS)

*TO BE COMPLETED BY THE CERTIFYING ENGINEER

TYPE OF FACILITY: RAIN GARDEN — BMP ID: 157

FEATURE	DESIGN	*AS-BUILT
DRAINAGE AREA (AC)	0.30	
TOTAL IMPERVIOUS AREA (AC)	0.15	
TREATMENT VOLUME PROVIDED (CF)	173	
TARGET WQv TREATMENT VOLUME (CF)	545	
FILTER BED AREA (SF) [1]	74	
FILTER BED SURFACE ELEVATION	280.15	
DESIGN POINT/MAX. PONDING ELEVATION	280.75	
PONDED WATER SURFACE ELEVATION AREA (SF) [2]	137	
OUTLET PIPE (UNDERDRAIN) SIZE / INVERT ELEV.	N / A	
THICKNESS OF FILTER MEDIA	REFER TO PROFILE	
PLACEMENT OF GEOTEXTILE (SIDES ONLY)	REFER TO FACILITY TYP. SECTION – SHEET 9	
PLANTINGS	REFER TO LANDSCAPE PLAN – SHEET 52	
COMPOSITION OF FILTER MEDIA	REFER TO MCDEP SPECIFICATIONS	

*NOTES:

1. "FILTER BED AREA (SF)" REPRESENTS THE EXPOSED SURFACE AREA AT THE PROPOSED "FILTER BED SURFACE ELEVATION".
2. FOR MATERIAL QUANTITY ESTIMATIONS, THE PLANTING MEDIA, STONE, MULCH, ETC. SHOULD BE BASED ON THE AREA OF "PONDED WATER SURFACE ELEVATION AREA (SF)".
3. CONTRACTOR SHALL TEST PIT UTILITIES PRIOR TO CONSTRUCTION. IF UTILITY IS UNAVOIDABLE, CONTRACTOR SHALL REFER TO SHEET 8 FOR UTILITY CROSSING DETAIL WITHIN THE FACILITY.

AS-BUILT DATA FOR FILTERS (BIORETENTION/RAIN GARDENS)

*TO BE COMPLETED BY THE CERTIFYING ENGINEER

TYPE OF FACILITY: RAIN GARDEN — BMP ID: 158

FEATURE	DESIGN	*AS-BUILT
DRAINAGE AREA (AC)	0.51	
TOTAL IMPERVIOUS AREA (AC)	0.19	
TREATMENT VOLUME PROVIDED (CF)	120	
TARGET WQv TREATMENT VOLUME (CF)	715	
FILTER BED AREA (SF) [1]	52	
FILTER BED SURFACE ELEVATION	278.15	
DESIGN POINT/MAX. PONDING ELEVATION	278.75	
PONDED WATER SURFACE ELEVATION AREA (SF) [2]	95	
OUTLET PIPE (UNDERDRAIN) SIZE / INVERT ELEV.	N / A	
THICKNESS OF FILTER MEDIA	REFER TO PROFILE	
PLACEMENT OF GEOTEXTILE (SIDES ONLY)	REFER TO FACILITY TYP. SECTION – SHEET 9	
PLANTINGS	REFER TO LANDSCAPE PLAN – SHEET 52	
COMPOSITION OF FILTER MEDIA	REFER TO MCDEP SPECIFICATIONS	

COMBINATION CONC. CURB AND GUTTER

STA. TO STA.	L.F.	REMARKS
451+37, RT TO 451+44, RT	7	TYPE A, MC.100.01
451+49, RT TO 451+76, RT	27	TYPE A, MC.100.01
451+76, RT TO 451+86, RT	10	TRANSITION TYPE A TO TYPE C
451+59, LT TO 451+69, LT	10	TRANSITION TYPE A TO TYPE C
451+69, LT TO 451+72, LT	3	TYPE A, MC.100.01
451+78, LT TO 451+90, LT	12	TYPE A, MC.100.01
451+90, LT TO 452+00, LT	10	TRANSITION TYPE A TO TYPE C

10' 0 10' 20'
SCALE: 1"=10'

509 South Exater Street
4th Floor
Baltimore, Maryland 21202
(410) 662-7400

McCormick Taylor
Engineers & Planners
Since 1946

PLAN AND PROFILE - BMP 157 & 158

FRANKLIN KNOLLS-PHASE 4

SLIGO (13th) ELECTION DISTRICT

PARCEL X, SUBDIVISION X, LIBER X FOLIO X

MONTGOMERY COUNTY, MARYLAND

CLIENT: MONTGOMERY COUNTY DEPT OF ENVIRONMENTAL PROTECTION
255 ROCKVILLE PIKE, RM. 120
ROCKVILLE, MD 20850-4166
MR. PAUL BOGLE, P.E.
(240) 777-7757

DESIGN	KCS
DRAFT	WJW
APPROVED	HJD
DATE	JUNE 2014
SCALE	1"=10'

SHEET 33 OF 52

FILE: 1351B213 - Roadway LID - Forest Estates and the Four Corners Area\Design\Engineering\PlanSet\FK P4\pltD-P027_FK4_BMP-157_158.dgn
PLOTTED: Thursday, June 05, 2014 AT 02:46 PM

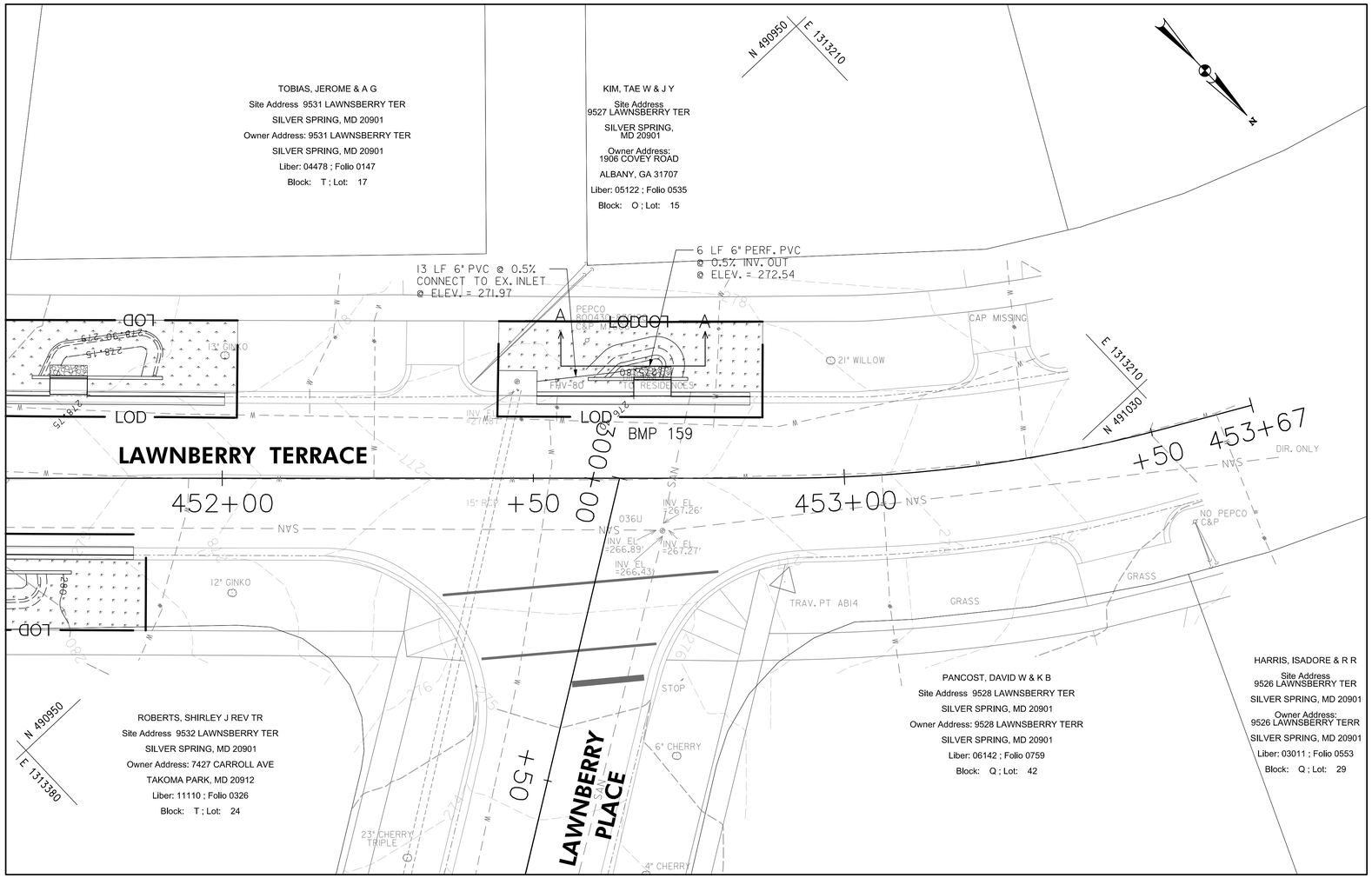

AS-BUILT DATA FOR FILTERS (BIORETENTION/RAIN GARDENS)

*TO BE COMPLETED BY THE CERTIFYING ENGINEER

TYPE OF FACILITY: BIORETENTION — BMP ID: 159

FEATURE	DESIGN	*AS-BUILT
DRAINAGE AREA (AC)	1.15	
TOTAL IMPERVIOUS AREA (AC)	0.46	
TREATMENT VOLUME PROVIDED (CF)	54	
TARGET WQv TREATMENT VOLUME (CF)	1,710	
FILTER BED AREA (SF) [1]	17	
FILTER BED SURFACE ELEVATION	275.80	
DESIGN POINT/MAX. PONDING ELEVATION	276.40	
PONDED WATER SURFACE ELEVATION AREA (SF) [2]	44	
OUTLET PIPE (UNDERDRAIN) SIZE / INVERT ELEV.	6" / 271.97	
THICKNESS OF FILTER MEDIA	REFER TO PROFILE	
PLACEMENT OF GEOTEXTILE (SIDES ONLY)	REFER TO FACILITY TYP. SECTION – SHEET 9	
PLANTINGS	REFER TO LANDSCAPE PLAN – SHEET 52	
COMPOSITION OF FILTER MEDIA	REFER TO MCDEP SPECIFICATIONS	

*NOTES:
1. "FILTER BED AREA (SF)" REPRESENTS THE EXPOSED SURFACE AREA AT THE PROPOSED "FILTER BED SURFACE ELEVATION".
2. FOR MATERIAL QUANTITY ESTIMATIONS, THE PLANTING MEDIA, STONE, MULCH, ETC. SHOULD BE BASED ON THE AREA OF "PONDED WATER SURFACE ELEVATION AREA (SF)".
3. CONTRACTOR SHALL TEST PIT UTILITIES PRIOR TO CONSTRUCTION. IF UTILITY IS UNAVOIDABLE, CONTRACTOR SHALL REFER TO SHEET 8 FOR UTILITY CROSSING DETAIL WITHIN THE FACILITY.

COMBINATION CONC. CURB AND GUTTER

STA. TO STA.	L.F.	REMARKS
452+51, LT TO 452+66, LT	16	TYPE A, MC.100.01
452+72, LT TO 452+75, LT	3	TYPE A, MC.100.01
452+75, LT TO 452+85, LT	10	TRANSITION TYPE A TO TYPE C

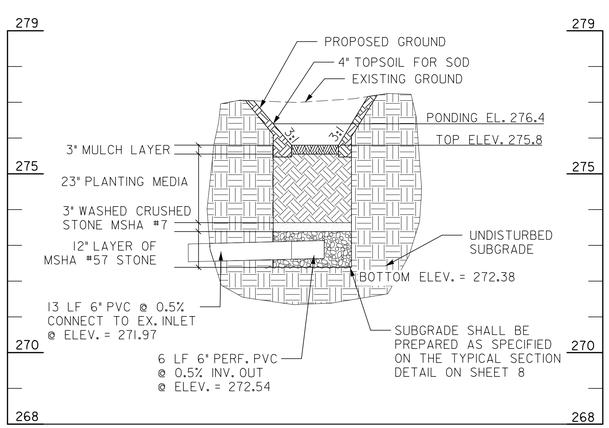

PROFILE (A-A) - RAIN GARDEN FACILITY (BMP 159)

SCALE: HORIZ. 1"=10'
VERT. 1"=2'

10' 0 10' 20'
SCALE: 1"=10'

McCormick Taylor
Engineers & Planners Since 1946
509 South Exeter Street
4th Floor
Baltimore, Maryland 21202
(410) 662-7400

PLAN AND PROFILE - BMP 159
FRANKLIN KNOLLS-PHASE 4
SLIGO (13th) ELECTION DISTRICT
PARCEL X, SUBDIVISION X, LIBER X FOLIO X
MONTGOMERY COUNTY, MARYLAND

CLIENT: MONTGOMERY COUNTY DEPT OF ENVIRONMENTAL PROTECTION
255 ROCKVILLE PIKE, RM. 120
ROCKVILLE, MD 20850-4166
MR. PAUL BOGLE, P.E.
(240) 777-7757

DESIGN	KCS
DRAFT	WJW
APPROVED	HJD
DATE	JUNE 2014
SCALE	1"=10'

SHEET 34 OF 52

FILE: I:\5182\13 - Roadway LID – Forest Estates and the Four Corners Area\Design\Engineering\PlanSet\FK P4\pltD-P002_FK4_BMP-159.dgn
PLOTTED: Thursday, June 05, 2014 AT 02:46 PM

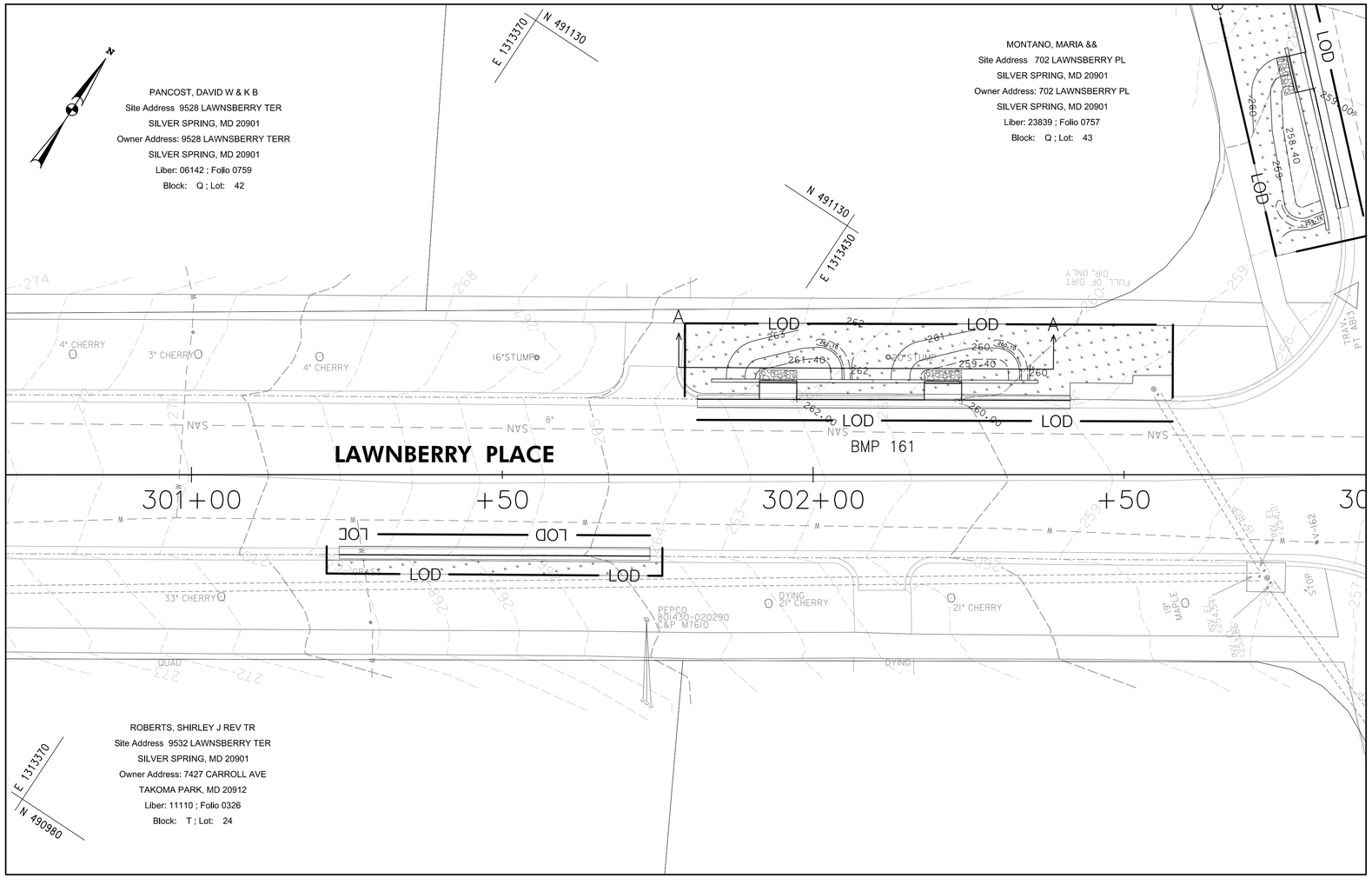

AS-BUILT DATA FOR FILTERS (BIORETENTION/RAIN GARDENS)

*TO BE COMPLETED BY THE CERTIFYING ENGINEER

TYPE OF FACILITY: RAIN GARDEN — BMP ID: 161

FEATURE	DESIGN	*AS-BUILT
DRAINAGE AREA (AC)	2.28	
TOTAL IMPERVIOUS AREA (AC)	0.74	
TREATMENT VOLUME PROVIDED (CF)	175	
TARGET WQv TREATMENT VOLUME (CF)	2,831	
FILTER BED AREA (SF) [1]	69	
FILTER BED SURFACE ELEVATION	261.40, 259.40	
DESIGN POINT/MAX. PONDING ELEVATION	262.00, 260.00	
PONDED WATER SURFACE ELEVATION AREA (SF) [2]	140	
OUTLET PIPE (UNDERDRAIN) SIZE / INVERT ELEV.	N / A	
THICKNESS OF FILTER MEDIA	REFER TO PROFILE	
PLACEMENT OF GEOTEXTILE (SIDES ONLY)	REFER TO FACILITY TYP. SECTION – SHEET 9	
PLANTINGS	REFER TO LANDSCAPE PLAN – SHEET 52	
COMPOSITION OF FILTER MEDIA	REFER TO MCDEP SPECIFICATIONS	

*NOTES:

1. "FILTER BED AREA (SF)" REPRESENTS THE EXPOSED SURFACE AREA AT THE PROPOSED "FILTER BED SURFACE ELEVATION".
2. FOR MATERIAL QUANTITY ESTIMATIONS, THE PLANTING MEDIA, STONE, MULCH, ETC. SHOULD BE BASED ON THE AREA OF "PONDED WATER SURFACE ELEVATION AREA (SF)".
3. CONTRACTOR SHALL TEST PIT UTILITIES PRIOR TO CONSTRUCTION. IF UTILITY IS UNAVOIDABLE, CONTRACTOR SHALL REFER TO SHEET 8 FOR UTILITY CROSSING DETAIL WITHIN THE FACILITY.

COMBINATION CONC. CURB AND GUTTER

STA. TO STA.	L.F.	REMARKS
301+81, LT TO 301+91, LT	10	TRANSITION TYPE A TO TYPE C
301+97, LT TO 302+18, LT	21	TYPE A, MC.100.01
302+24, LT TO 302+41, LT	17	TYPE A, MC.100.01
301+24, RT TO 301+74, RT	50	TYPE C, MC.101.01

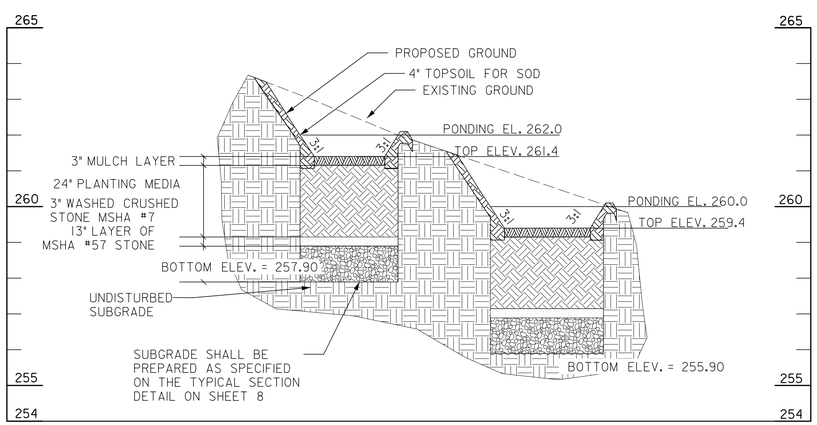

PROFILE (B-B) - RAIN GARDEN FACILITY (BMP 161)

SCALE: HORIZ. 1"=10'
VERT. 1"=2'

10' 0 10' 20'
SCALE: 1"=10'

McCormick Taylor
Engineers & Planners Since 1946
509 South Exeter Street
4th Floor
Baltimore, Maryland 21202
(410) 662-7400

PLAN AND PROFILE - BMP 161

FRANKLIN KNOLLS-PHASE 4

SLIGO (13th) ELECTION DISTRICT

PARCEL X, SUBDIVISION X, LIBER X FOLIO X

MONTGOMERY COUNTY, MARYLAND

CLIENT: MONTGOMERY COUNTY DEPT OF ENVIRONMENTAL PROTECTION
255 ROCKVILLE PIKE, RM. 120
ROCKVILLE, MD 20850-4166
MR. PAUL BOGLE, P.E.
(240) 777-7757

DESIGN	KCS
DRAFT	WJW
APPROVED	HJD
DATE	JUNE 2014
SCALE	1"=10'

SHEET 35 OF 52

FILE: I:\5152\13 - Roadway LID - Forest Estates and the Four Corners Area\Design\Engineering\PlanSet\FK P4\grID-P003_FK4_BMP-161.dgn
PLOTTED: Thursday, June 05, 2014 AT 02:46 PM

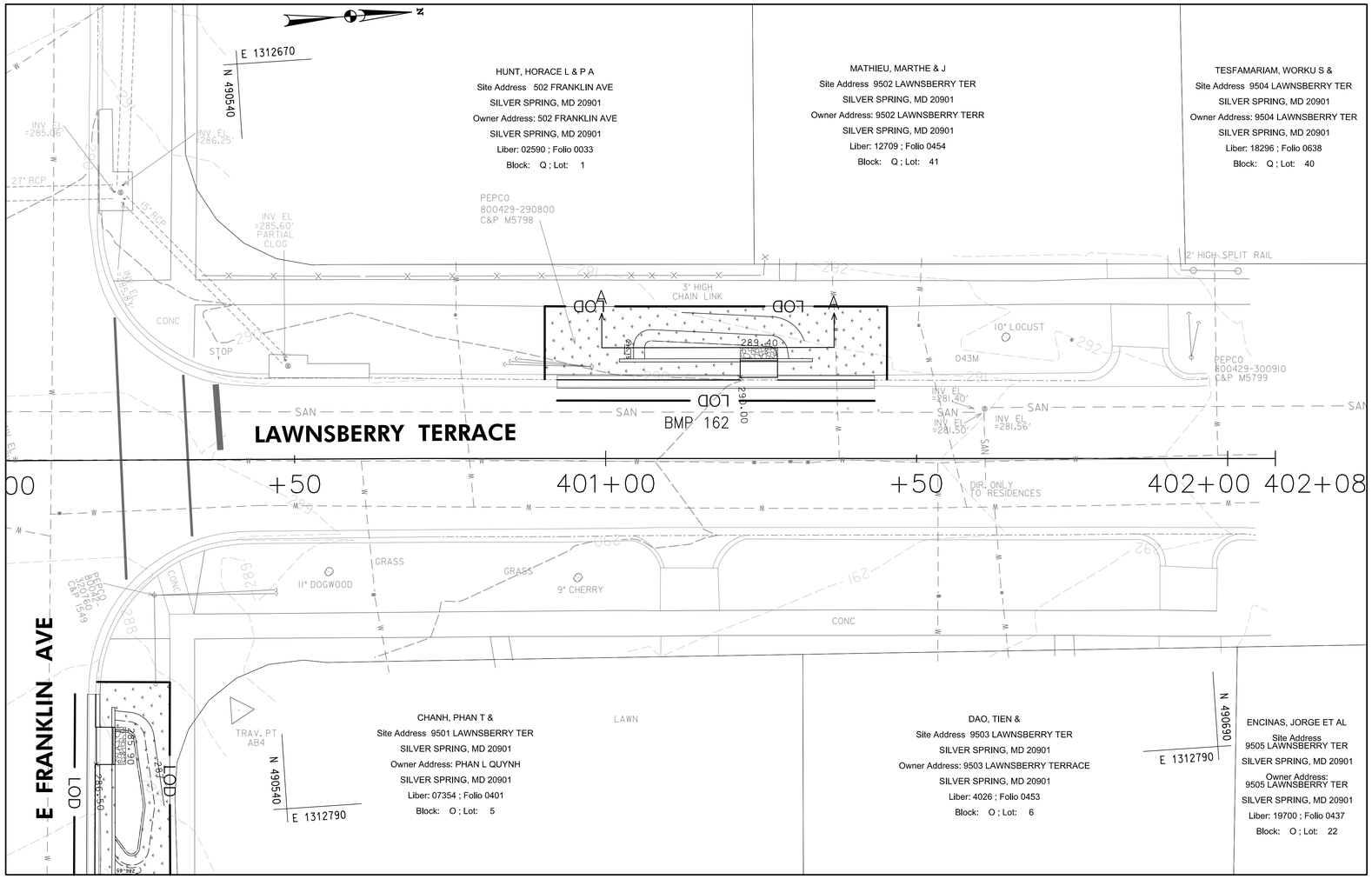

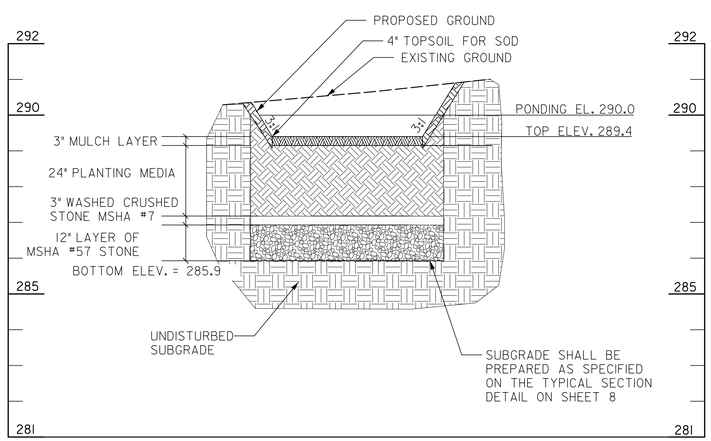

PROFILE (B-B) - RAIN GARDEN FACILITY (BMP 162)

SCALE: HORIZ. 1"=10'
VERT. 1"=2'

AS-BUILT DATA FOR FILTERS (BIORETENTION/RAIN GARDENS)

*TO BE COMPLETED BY THE CERTIFYING ENGINEER

TYPE OF FACILITY: BIORETENTION BMP ID: 162

FEATURE	DESIGN	*AS-BUILT
DRAINAGE AREA (AC)	3.82	
TOTAL IMPERVIOUS AREA (AC)	0.90	
TREATMENT VOLUME PROVIDED (CF)	126	
TARGET WQv TREATMENT VOLUME (CF)	3,634	
FILTER BED AREA (SF) [1]	51	
FILTER BED SURFACE ELEVATION	289.40	
DESIGN POINT/MAX. PONDING ELEVATION	290.00	
PONDED WATER SURFACE ELEVATION AREA (SF) [2]	101	
OUTLET PIPE (UNDERDRAIN) SIZE / INVERT ELEV.	N / A	
THICKNESS OF FILTER MEDIA	REFER TO PROFILE	
PLACEMENT OF GEOTEXTILE (SIDES ONLY)	REFER TO FACILITY TYP. SECTION – SHEET 9	
PLANTINGS	REFER TO LANDSCAPE PLAN – SHEET 52	
COMPOSITION OF FILTER MEDIA	REFER TO MCDEP SPECIFICATIONS	

*NOTES:

1. "FILTER BED AREA (SF)" REPRESENTS THE EXPOSED SURFACE AREA AT THE PROPOSED "FILTER BED SURFACE ELEVATION".
2. FOR MATERIAL QUANTITY ESTIMATIONS, THE PLANTING MEDIA, STONE, MULCH, ETC. SHOULD BE BASED ON THE AREA OF "PONDED WATER SURFACE ELEVATION AREA (SF)".
3. CONTRACTOR SHALL TEST PIT UTILITIES PRIOR TO CONSTRUCTION. IF UTILITY IS UNAVOIDABLE, CONTRACTOR SHALL REFER TO SHEET 8 FOR UTILITY CROSSING DETAIL WITHIN THE FACILITY.

COMBINATION CONC. CURB AND GUTTER

STA. TO STA.	L.F.	REMARKS
400+92, LT TO 401+02, LT	10	TRANSITION TYPE A TO TYPE C
401+02, LT TO 401+22, LT	19	TYPE A, MC.100.01
401+28, LT TO 401+33, LT	6	TYPE A, MC.100.01
401+33, LT TO 401+43, LT	10	TRANSITION TYPE A TO TYPE C

10' 0 10' 20'
SCALE: 1"=10'

McCormick Taylor
Engineers & Planners Since 1946
509 South Exeter Street
4th Floor
Baltimore, Maryland 21202
(410) 662-7400

PLAN AND PROFILE - BMP 162
FRANKLIN KNOLLS-PHASE 4
SLIGO (13th) ELECTION DISTRICT
PARCEL X, SUBDIVISION X, LIBER X FOLIO X
MONTGOMERY COUNTY, MARYLAND

CLIENT: MONTGOMERY COUNTY DEPT OF ENVIRONMENTAL PROTECTION
255 ROCKVILLE PIKE, RM. 120
ROCKVILLE, MD 20850-4166
MR. PAUL BOGLE, P.E.
(240) 777-7757

DESIGN	KCS
DRAFT	WJW
APPROVED	HJD
DATE	JUNE 2014
SCALE	1"=10'

SHEET 36 OF 52

FILE: I:\5182\13 - Roadway LID – Forest Estates and the Four Corners Area\Design\Engineering\PlanSet\FK P4\pltD-P030_FK4_BMP-162.dgn
PLOTTED: Thursday, June 05, 2014 AT 02:46 PM

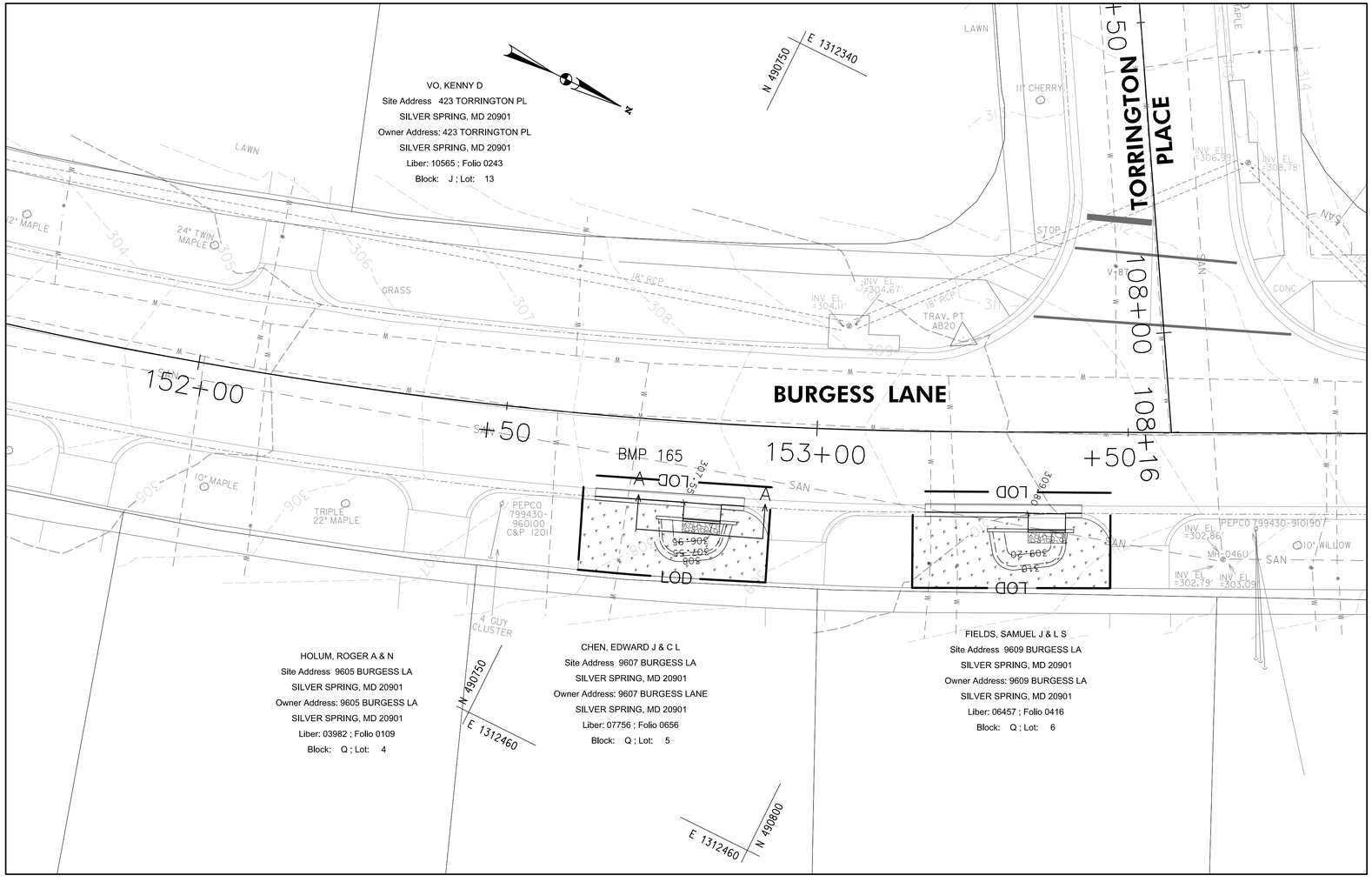

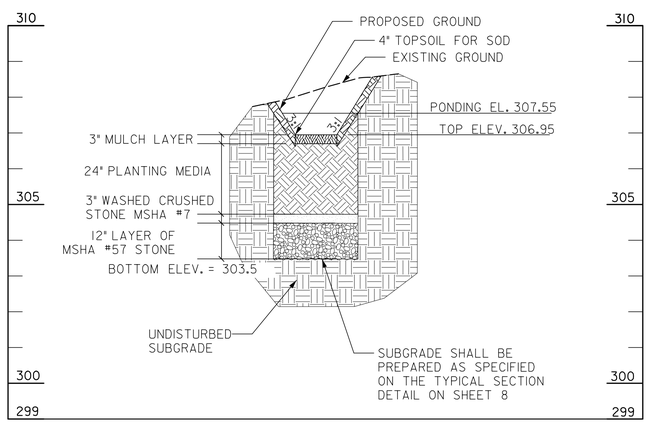

PROFILE (A-A) - RAIN GARDEN FACILITY (BMP 165)

SCALE: HORIZ. 1"=10'
VERT. 1"=2'

AS-BUILT DATA FOR FILTERS (BIORETENTION/RAIN GARDENS)

*TO BE COMPLETED BY THE CERTIFYING ENGINEER

TYPE OF FACILITY: RAIN GARDEN — BMP ID: 165

FEATURE	DESIGN	*AS-BUILT
DRAINAGE AREA (AC)	0.07	
TOTAL IMPERVIOUS AREA (AC)	0.03	
TREATMENT VOLUME PROVIDED (CF)	63	
TARGET WQv TREATMENT VOLUME (CF)	111	
FILTER BED AREA (SF) [1]	19	
FILTER BED SURFACE ELEVATION	306.95	
DESIGN POINT/MAX. PONDING ELEVATION	307.55	
PONDED WATER SURFACE ELEVATION AREA (SF) [2]	52	
OUTLET PIPE (UNDERDRAIN) SIZE / INVERT ELEV.	N / A	
THICKNESS OF FILTER MEDIA	REFER TO PROFILE	
PLACEMENT OF GEOTEXTILE (SIDES ONLY)	REFER TO FACILITY TYP. SECTION – SHEET 9	
PLANTINGS	REFER TO LANDSCAPE PLAN – SHEET 52	
COMPOSITION OF FILTER MEDIA	REFER TO MCDEP SPECIFICATIONS	

*NOTES:

1. "FILTER BED AREA (SF)" REPRESENTS THE EXPOSED SURFACE AREA AT THE PROPOSED "FILTER BED SURFACE ELEVATION".
2. FOR MATERIAL QUANTITY ESTIMATIONS, THE PLANTING MEDIA, STONE, MULCH, ETC. SHOULD BE BASED ON THE AREA OF "PONDED WATER SURFACE ELEVATION AREA (SF)".
3. CONTRACTOR SHALL TEST PIT UTILITIES PRIOR TO CONSTRUCTION. IF UTILITY IS UNAVOIDABLE, CONTRACTOR SHALL REFER TO SHEET 8 FOR UTILITY CROSSING DETAIL WITHIN THE FACILITY.

COMBINATION CONC. CURB AND GUTTER

STA. TO STA.	L.F.	REMARKS
152+65, RT TO 152+75, RT	10	TRANSITION TYPE A TO TYPE C
152+75, RT TO 152+79, RT	4	TYPE A, MC.100.01
152+85, RT TO 152+89, RT	4	TYPE A, MC.100.01

10' 0 10' 20'
SCALE: 1"=10'

McCormick Taylor
Engineers & Planners Since 1946
509 South Exeter Street
4th Floor
Baltimore, Maryland 21202
(410) 662-7400

PLAN AND PROFILE - BMP 165
FRANKLIN KNOLLS-PHASE 4
SLIGO (13th) ELECTION DISTRICT
PARCEL X, SUBDIVISION X, LIBER X FOLIO X
MONTGOMERY COUNTY, MARYLAND

CLIENT: MONTGOMERY COUNTY DEPT OF ENVIRONMENTAL PROTECTION
255 ROCKVILLE PIKE, RM. 120
ROCKVILLE, MD 20850-4166
MR. PAUL BOGLE, P.E.
(240) 777-7757

DESIGN	KCS
DRAFT	WJW
APPROVED	HJD
DATE	JUNE 2014
SCALE	1"=10'

SHEET 37 OF 52

FILE: I:\518213 - Roadway LID - Forest Estates and the Four Corners Area\Design\Engineering\PlanSet\FK P4\pr\D-P031_FK4_BMP-165.dgn
PLOTTED: Thursday, June 05, 2014 AT 02:46 PM

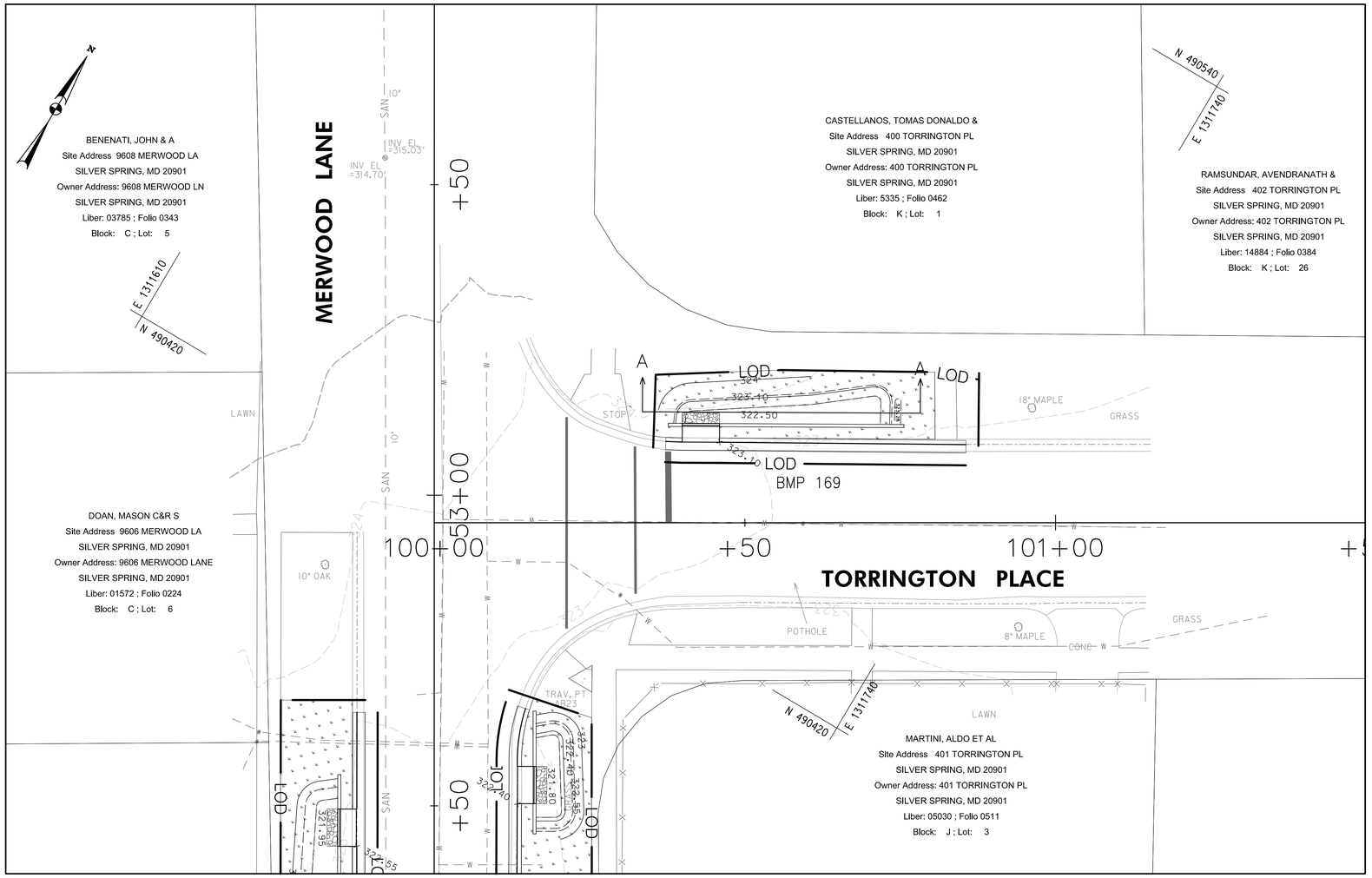

AS-BUILT DATA FOR FILTERS (BIORETENTION/RAIN GARDENS)

*TO BE COMPLETED BY THE CERTIFYING ENGINEER

TYPE OF FACILITY: RAIN GARDEN — BMP ID: 169

FEATURE	DESIGN	*AS-BUILT
DRAINAGE AREA (AC)	0.59	
TOTAL IMPERVIOUS AREA (AC)	0.29	
TREATMENT VOLUME PROVIDED (CF)	212	
TARGET WQv TREATMENT VOLUME (CF)	1,055	
FILTER BED AREA (SF) [1]	95	
FILTER BED SURFACE ELEVATION	322.50	
DESIGN POINT/MAX. PONDING ELEVATION	323.10	
PONDED WATER SURFACE ELEVATION AREA (SF) [2]	167	
OUTLET PIPE (UNDERDRAIN) SIZE / INVERT ELEV.	N / A	
THICKNESS OF FILTER MEDIA	REFER TO PROFILE	
PLACEMENT OF GEOTEXTILE (SIDES ONLY)	REFER TO FACILITY TYP. SECTION – SHEET 9	
PLANTINGS	REFER TO LANDSCAPE PLAN – SHEET 52	
COMPOSITION OF FILTER MEDIA	REFER TO MCDEP SPECIFICATIONS	

*NOTES:

1. "FILTER BED AREA (SF)" REPRESENTS THE EXPOSED SURFACE AREA AT THE PROPOSED "FILTER BED SURFACE ELEVATION".
2. FOR MATERIAL QUANTITY ESTIMATIONS, THE PLANTING MEDIA, STONE, MULCH, ETC. SHOULD BE BASED ON THE AREA OF "PONDED WATER SURFACE ELEVATION AREA (SF)".
3. CONTRACTOR SHALL TEST PIT UTILITIES PRIOR TO CONSTRUCTION. IF UTILITY IS UNAVOIDABLE, CONTRACTOR SHALL REFER TO SHEET 8 FOR UTILITY CROSSING DETAIL WITHIN THE FACILITY.

COMBINATION CONC. CURB AND GUTTER

STA. TO STA.	L.F.	REMARKS
100+37, LT TO 100+40, LT	3	TYPE A, MC.100.01
100+46, LT TO 100+76, LT	30	TYPE A, MC.100.01
100+76, LT TO 100+86, LT	10	TRANSITION TYPE A TO TYPE C

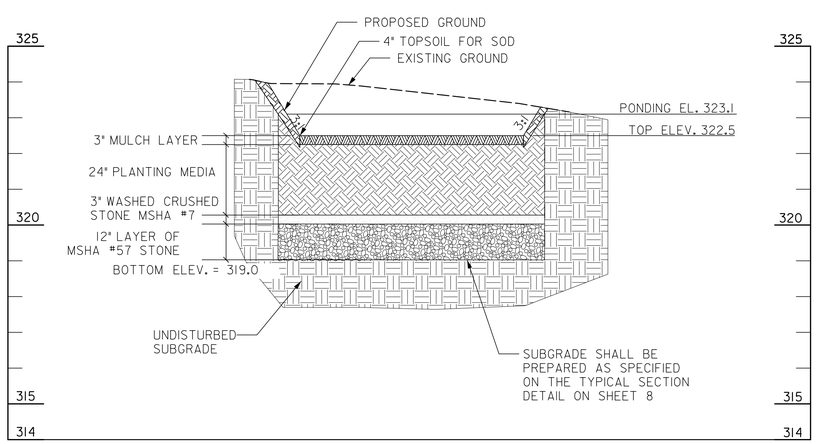

PROFILE (B-B) - RAIN GARDEN FACILITY (BMP 169)

SCALE: HORIZ. 1"=10'
VERT. 1"=2'

10' 0 10' 20'
SCALE: 1"=10'

McCormick Taylor
Engineers & Planners Since 1946
509 South Exeter Street
4th Floor
Baltimore, Maryland 21202
(410) 662-7400

PLAN AND PROFILE - BMP 169
FRANKLIN KNOLLS-PHASE 4
SLIGO (13th) ELECTION DISTRICT
PARCEL X, SUBDIVISION X, LIBER X FOLIO X
MONTGOMERY COUNTY, MARYLAND

CLIENT: MONTGOMERY COUNTY DEPT OF ENVIRONMENTAL PROTECTION
255 ROCKVILLE PIKE, RM. 120
ROCKVILLE, MD 20850-4166
MR. PAUL BOGLE, P.E.
(240) 777-7757

DESIGN	KCS
DRAFT	WJW
APPROVED	HJD
DATE	JUNE 2014
SCALE	1"=10'

SHEET 38 OF 52

FILE: 13518213 - Roadway LID - Forest Estates and the Four Corners Area\Design\Engineering\PlanSet\FK Pkg\D-PK04_FK4_BMP-169.dgn
PLOTTED: Thursday, June 05, 2014 AT 02:46 PM

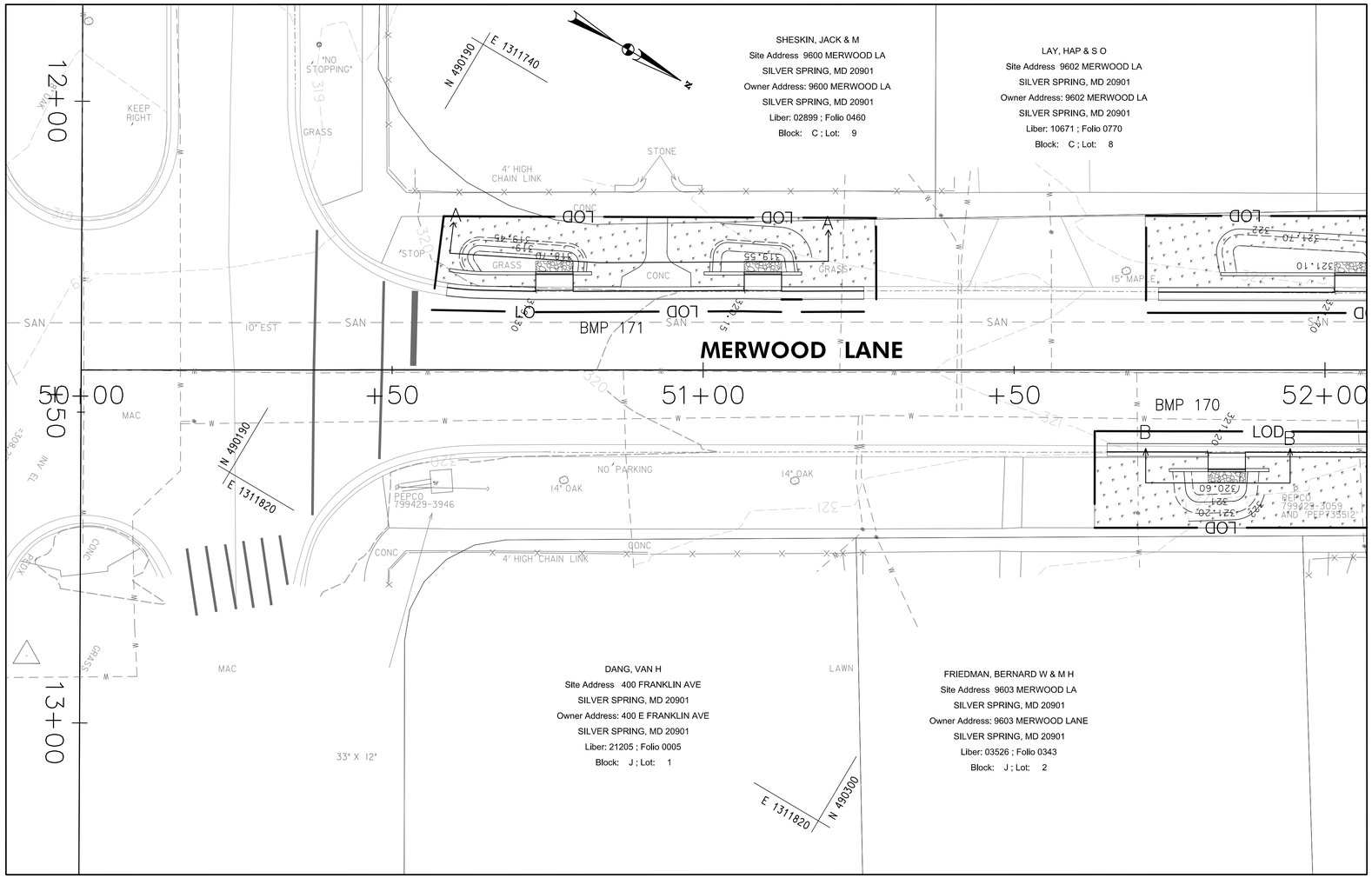

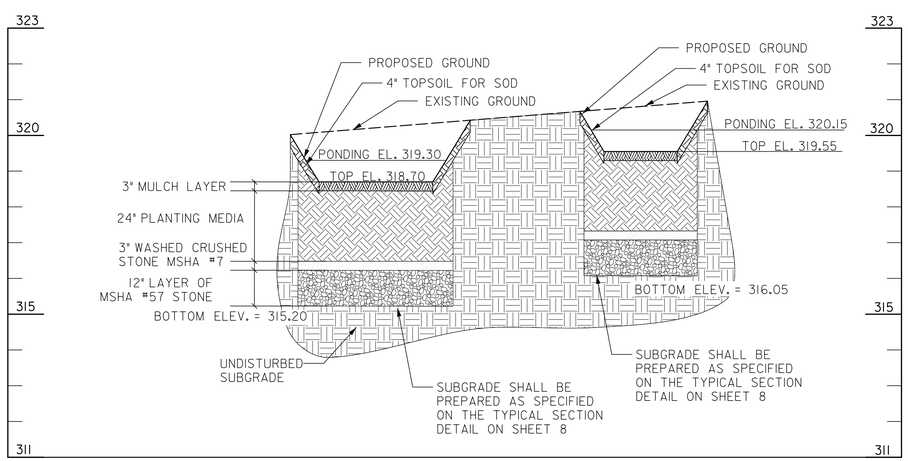

PROFILE (A-A) - RAIN GARDEN FACILITY (BMP 171)

SCALE: HORIZ. 1"=10'
VERT. 1"=2'

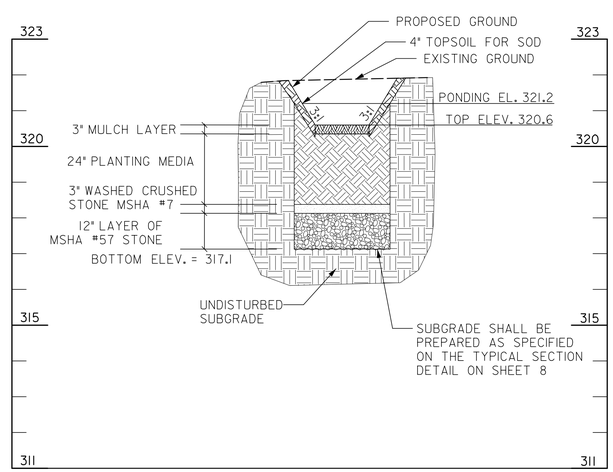

PROFILE (B-B) - RAIN GARDEN FACILITY (BMP 170)

SCALE: HORIZ. 1"=10'
VERT. 1"=2'

AS-BUILT DATA FOR FILTERS (BIORETENTION/RAIN GARDENS)

*TO BE COMPLETED BY THE CERTIFYING ENGINEER

TYPE OF FACILITY: RAIN GARDEN — BMP ID: 170

FEATURE	DESIGN	*AS-BUILT
DRAINAGE AREA (AC)	0.02	
TOTAL IMPERVIOUS AREA (AC)	0.05	
TREATMENT VOLUME PROVIDED (CF)	105	
TARGET WQv TREATMENT VOLUME (CF)	74	
FILTER BED AREA (SF) [1]	46	
FILTER BED SURFACE ELEVATION	320.60	
DESIGN POINT/MAX. PONDING ELEVATION	321.20	
PONDED WATER SURFACE ELEVATION AREA (SF) [2]	83	
OUTLET PIPE (UNDERDRAIN) SIZE / INVERT ELEV.	N / A	
THICKNESS OF FILTER MEDIA	REFER TO PROFILE	
PLACEMENT OF GEOTEXTILE (SIDES ONLY)	REFER TO FACILITY TYP. SECTION – SHEET 9	
PLANTINGS	REFER TO LANDSCAPE PLAN – SHEET 52	
COMPOSITION OF FILTER MEDIA	REFER TO MCDEP SPECIFICATIONS	

*NOTES:

1. "FILTER BED AREA (SF)" REPRESENTS THE EXPOSED SURFACE AREA AT THE PROPOSED "FILTER BED SURFACE ELEVATION".
2. FOR MATERIAL QUANTITY ESTIMATIONS, THE PLANTING MEDIA, STONE, MULCH, ETC. SHOULD BE BASED ON THE AREA OF "PONDED WATER SURFACE ELEVATION AREA (SF)".
3. CONTRACTOR SHALL TEST PIT UTILITIES PRIOR TO CONSTRUCTION. IF UTILITY IS UNAVOIDABLE, CONTRACTOR SHALL REFER TO SHEET 8 FOR UTILITY CROSSING DETAIL WITHIN THE FACILITY.

AS-BUILT DATA FOR FILTERS (BIORETENTION/RAIN GARDENS)

*TO BE COMPLETED BY THE CERTIFYING ENGINEER

TYPE OF FACILITY: RAIN GARDEN — BMP ID: 171

FEATURE	DESIGN	*AS-BUILT
DRAINAGE AREA (AC)	0.11	
TOTAL IMPERVIOUS AREA (AC)	0.05	
TREATMENT VOLUME PROVIDED (CF)	189	
TARGET WQv TREATMENT VOLUME (CF)	183	
FILTER BED AREA (SF) [1]	75	
FILTER BED SURFACE ELEVATION	318.70, 319.55	
DESIGN POINT/MAX. PONDING ELEVATION	319.30, 320.15	
PONDED WATER SURFACE ELEVATION AREA (SF) [2]	151	
OUTLET PIPE (UNDERDRAIN) SIZE / INVERT ELEV.	N / A	
THICKNESS OF FILTER MEDIA	REFER TO PROFILE	
PLACEMENT OF GEOTEXTILE (SIDES ONLY)	REFER TO FACILITY TYP. SECTION – SHEET 9	
PLANTINGS	REFER TO LANDSCAPE PLAN – SHEET 52	
COMPOSITION OF FILTER MEDIA	REFER TO MCDEP SPECIFICATIONS	

COMBINATION CONC. CURB AND GUTTER

STA. TO STA.	L.F.	REMARKS
51+65, RT TO 51+75, RT	10	TRANSITION TYPE A TO TYPE C
51+75, RT TO 51+81, RT	6	TYPE A, MC.100.01
50+59, LT TO 50+69, LT	10	TRANSITION TYPE A TO TYPE C
50+69, LT TO 50+73, LT	4	TYPE A, MC.100.01
50+79, LT TO 51+07, LT	28	TYPE A, MC.100.01
51+13, LT TO 51+16, LT	3	TYPE A, MC.100.01
51+16, LT TO 51+26, LT	10	TRANSITION TYPE A TO TYPE C

10' 0 10' 20'
SCALE: 1"=10'

McCormick Taylor
Engineers & Planners Since 1946
509 South Exeter Street
4th Floor
Baltimore, Maryland 21202
(410) 662-7400

PLAN AND PROFILE - BMP 170 & 171

FRANKLIN KNOLLS-PHASE 4

SLIGO (13th) ELECTION DISTRICT

PARCEL X, SUBDIVISION X, LIBER X FOLIO X

MONTGOMERY COUNTY, MARYLAND

CLIENT: MONTGOMERY COUNTY DEPT OF ENVIRONMENTAL PROTECTION
255 ROCKVILLE PIKE, RM. 120
ROCKVILLE, MD 20850-4166
MR. PAUL BOGLE, P.E.
(240) 777-7757

DESIGN	KCS		
DRAFT	WJW		
APPROVED	HJD	DATE	JUNE 2014
		SCALE	1"=10'

SHEET 39 OF 52

FILE: I:\51182\13 - Roadway LID - Forest Estates and the Four Corners Area\Design\Engineering\Plans\Set\FK P4\pltHD-P030_FK4_BMP-170_171.dgn
PLOTTED: Thursday, June 05, 2014 AT 02:47 PM

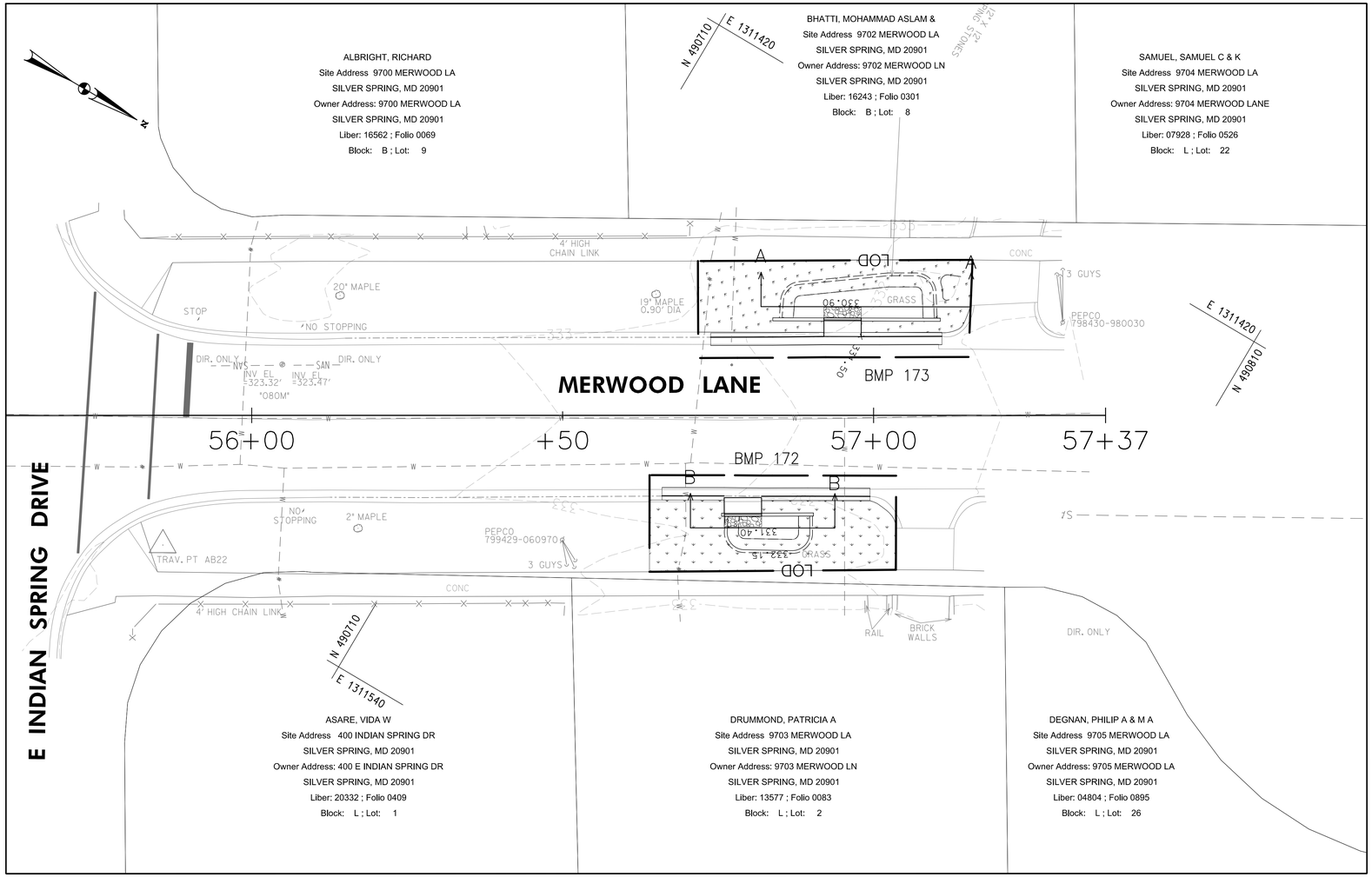

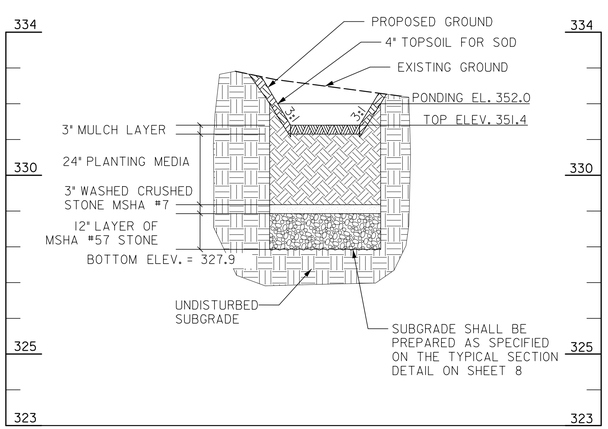

PROFILE (A-A) - RAIN GARDEN FACILITY (BMP 173)

SCALE: HORIZ. 1"=10'
VERT. 1"=2'

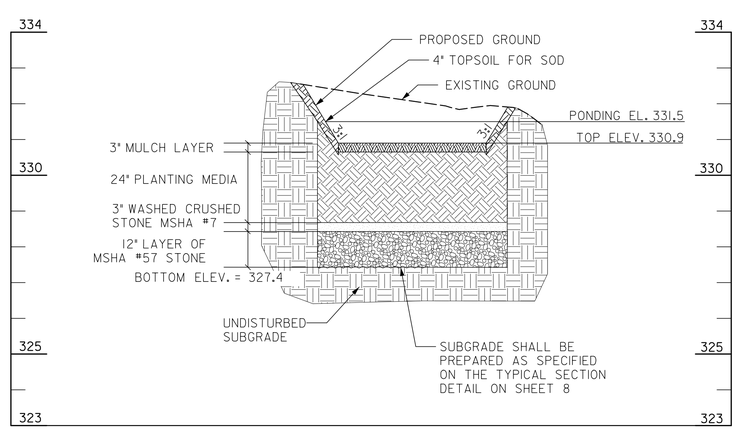

PROFILE (B-B) - RAIN GARDEN FACILITY (BMP 172)

SCALE: HORIZ. 1"=10'
VERT. 1"=2'

AS-BUILT DATA FOR FILTERS (BIORETENTION/RAIN GARDENS)

*TO BE COMPLETED BY THE CERTIFYING ENGINEER

TYPE OF FACILITY: RAIN GARDEN — BMP ID: 172

FEATURE	DESIGN	*AS-BUILT
DRAINAGE AREA (AC)	0.18	
TOTAL IMPERVIOUS AREA (AC)	0.07	
TREATMENT VOLUME PROVIDED (CF)	190	
TARGET WQv TREATMENT VOLUME (CF)	261	
FILTER BED AREA (SF) [1]	91	
FILTER BED SURFACE ELEVATION	331.40	
DESIGN POINT/MAX. PONDING ELEVATION	332.00	
PONDED WATER SURFACE ELEVATION AREA (SF) [2]	148	
OUTLET PIPE (UNDERDRAIN) SIZE / INVERT ELEV.	N / A	
THICKNESS OF FILTER MEDIA	REFER TO PROFILE	
PLACEMENT OF GEOTEXTILE (SIDES ONLY)	REFER TO FACILITY TYP. SECTION – SHEET 9	
PLANTINGS	REFER TO LANDSCAPE PLAN – SHEET 52	
COMPOSITION OF FILTER MEDIA	REFER TO MCDEP SPECIFICATIONS	

*NOTES:
1. "FILTER BED AREA (SF)" REPRESENTS THE EXPOSED SURFACE AREA AT THE PROPOSED "FILTER BED SURFACE ELEVATION".
2. FOR MATERIAL QUANTITY ESTIMATIONS, THE PLANTING MEDIA, STONE, MULCH, ETC. SHOULD BE BASED ON THE AREA OF "PONDED WATER SURFACE ELEVATION AREA (SF)".
3. CONTRACTOR SHALL TEST PIT UTILITIES PRIOR TO CONSTRUCTION. IF UTILITY IS UNAVOIDABLE, CONTRACTOR SHALL REFER TO SHEET 8 FOR UTILITY CROSSING DETAIL WITHIN THE FACILITY.

AS-BUILT DATA FOR FILTERS (BIORETENTION/RAIN GARDENS)

*TO BE COMPLETED BY THE CERTIFYING ENGINEER

TYPE OF FACILITY: RAIN GARDEN — BMP ID: 173

FEATURE	DESIGN	*AS-BUILT
DRAINAGE AREA (AC)	0.14	
TOTAL IMPERVIOUS AREA (AC)	0.07	
TREATMENT VOLUME PROVIDED (CF)	86	
TARGET WQv TREATMENT VOLUME (CF)	254	
FILTER BED AREA (SF) [1]	35	
FILTER BED SURFACE ELEVATION	330.90	
DESIGN POINT/MAX. PONDING ELEVATION	331.50	
PONDED WATER SURFACE ELEVATION AREA (SF) [2]	69	
OUTLET PIPE (UNDERDRAIN) SIZE / INVERT ELEV.	N / A	
THICKNESS OF FILTER MEDIA	REFER TO PROFILE	
PLACEMENT OF GEOTEXTILE (SIDES ONLY)	REFER TO FACILITY TYP. SECTION – SHEET 9	
PLANTINGS	REFER TO LANDSCAPE PLAN – SHEET 52	
COMPOSITION OF FILTER MEDIA	REFER TO MCDEP SPECIFICATIONS	

COMBINATION CONC. CURB AND GUTTER

STA. TO STA.	L.F.	REMARKS
56+66, RT TO 56+76, RT	10	TRANSITION TYPE A TO TYPE C
56+82, RT TO 56+89, RT	7	TYPE A, MC.100.01
56+89, RT TO 56+99, RT	10	TRANSITION TYPE A TO TYPE C
56+74, LT TO 56+84, LT	10	TRANSITION TYPE A TO TYPE C
56+84, LT TO 56+92, LT	8	TYPE A, MC.100.01
56+98, LT TO 57+01, LT	3	TYPE A, MC.100.01
57+01, LT TO 57+11, LT	10	TRANSITION TYPE A TO TYPE C

10' 0 10' 20'
SCALE: 1"=10'

McCormick Taylor
Engineers & Planners Since 1946
509 South Exater Street
4th Floor
Baltimore, Maryland 21202
(410) 662-7400

PLAN AND PROFILE - BMP 172 & 173
FRANKLIN KNOLLS-PHASE 4
SLIGO (13th) ELECTION DISTRICT
PARCEL X, SUBDIVISION X, LIBER X FOLIO X
MONTGOMERY COUNTY, MARYLAND

CLIENT: MONTGOMERY COUNTY DEPT OF ENVIRONMENTAL PROTECTION
255 ROCKVILLE PIKE, RM. 120
ROCKVILLE, MD 20850-4166
MR. PAUL BOGLE, P.E.
(240) 777-7757

DESIGN	KCS
DRAFT	WJW
APPROVED	HJD
DATE	JUNE 2014
SCALE	1"=10'

SHEET 40 OF 52

FILE: I:\31523\13 - Roadway LID - Forest Estates and the Four Corners Area\Design\Engineering\PlanSet\FK P4\pHD-P037_FK4_BMP-172_173.dgn
PLOTTED: Thursday, June 05, 2014 AT 02:47 PM

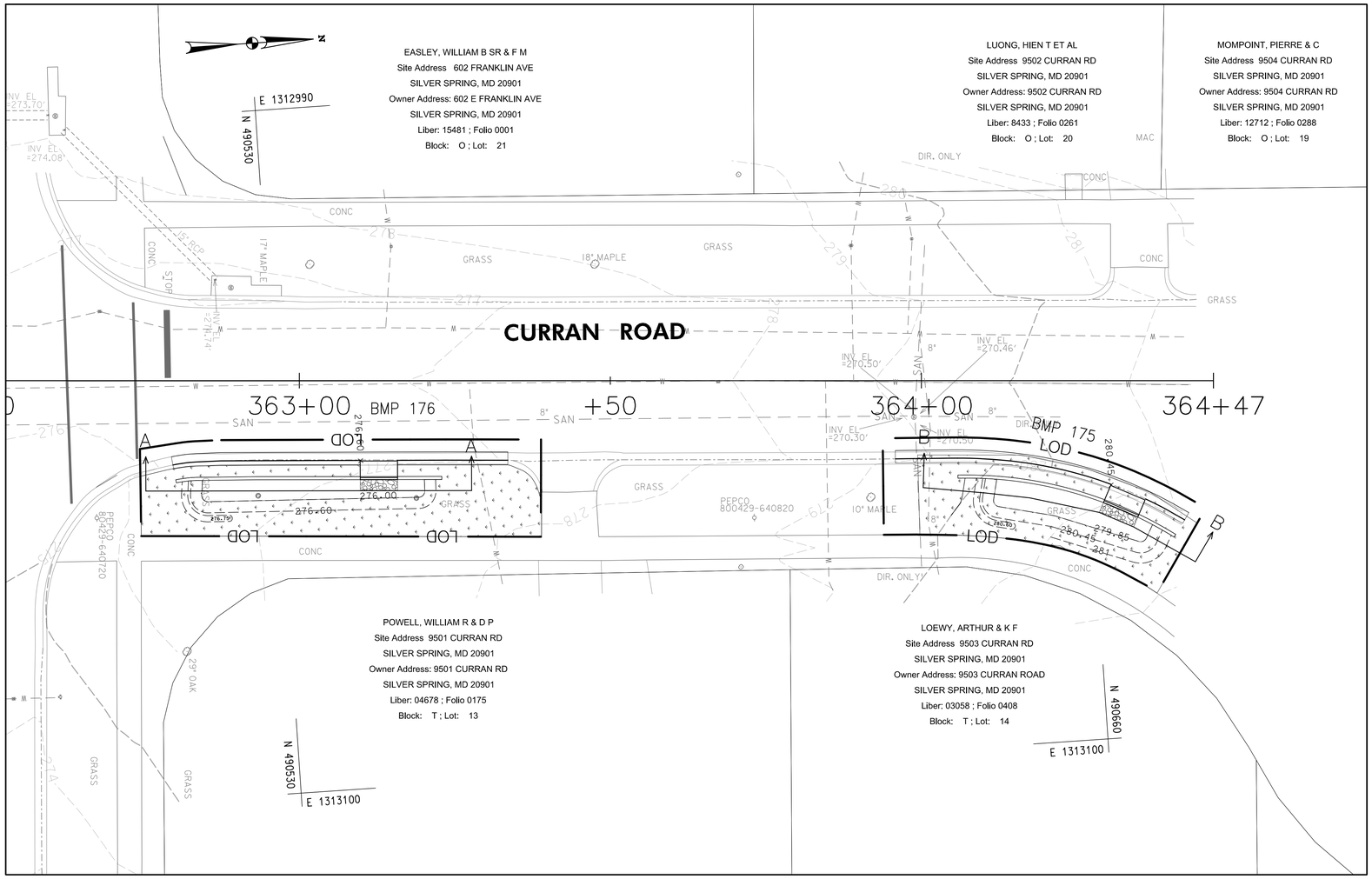

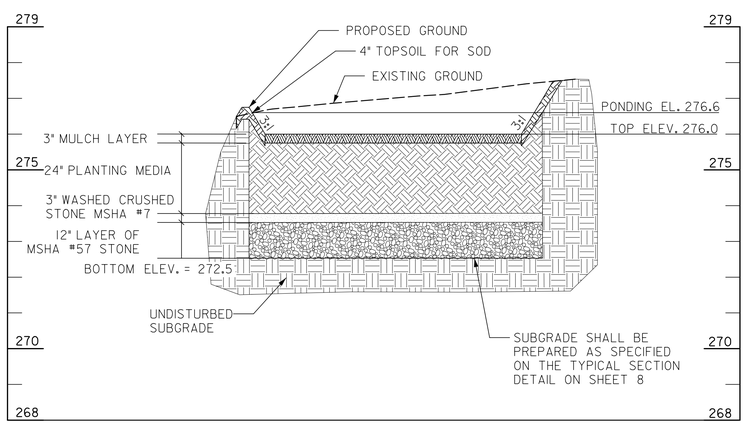

PROFILE (A-A) - RAIN GARDEN FACILITY (BMP 176)

SCALE: HORIZ. 1"=10'
VERT. 1"=2'

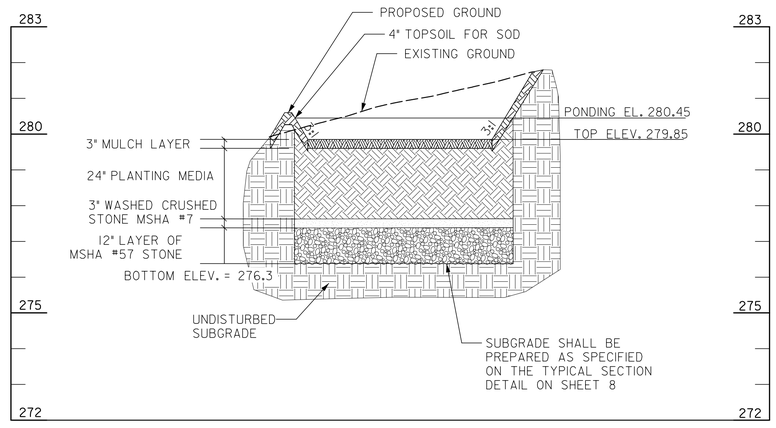

PROFILE (B-B) - RAIN GARDEN FACILITY (BMP 175)

SCALE: HORIZ. 1"=10'
VERT. 1"=2'

AS-BUILT DATA FOR FILTERS (BIORETENTION/RAIN GARDENS)

*TO BE COMPLETED BY THE CERTIFYING ENGINEER

TYPE OF FACILITY: RAIN GARDEN — BMP ID: 175

FEATURE	DESIGN	*AS-BUILT
DRAINAGE AREA (AC)	0.38	
TOTAL IMPERVIOUS AREA (AC)	0.17	
TREATMENT VOLUME PROVIDED (CF)	221	
TARGET WQv TREATMENT VOLUME (CF)	624	
FILTER BED AREA (SF) [1]	109	
FILTER BED SURFACE ELEVATION	279.85	
DESIGN POINT/MAX. PONDING ELEVATION	280.45	
PONDED WATER SURFACE ELEVATION AREA (SF) [2]	171	
OUTLET PIPE (UNDERDRAIN) SIZE / INVERT ELEV.	N / A	
THICKNESS OF FILTER MEDIA	REFER TO PROFILE	
PLACEMENT OF GEOTEXTILE (SIDES ONLY)	REFER TO FACILITY TYP. SECTION – SHEET 9	
PLANTINGS	REFER TO LANDSCAPE PLAN – SHEET 52	
COMPOSITION OF FILTER MEDIA	REFER TO MCDEP SPECIFICATIONS	

*NOTES:

1. "FILTER BED AREA (SF)" REPRESENTS THE EXPOSED SURFACE AREA AT THE PROPOSED "FILTER BED SURFACE ELEVATION".
2. FOR MATERIAL QUANTITY ESTIMATIONS, THE PLANTING MEDIA, STONE, MULCH, ETC. SHOULD BE BASED ON THE AREA OF "PONDED WATER SURFACE ELEVATION AREA (SF)".
3. CONTRACTOR SHALL TEST PIT UTILITIES PRIOR TO CONSTRUCTION. IF UTILITY IS UNAVOIDABLE, CONTRACTOR SHALL REFER TO SHEET 8 FOR UTILITY CROSSING DETAIL WITHIN THE FACILITY.

AS-BUILT DATA FOR FILTERS (BIORETENTION/RAIN GARDENS)

*TO BE COMPLETED BY THE CERTIFYING ENGINEER

TYPE OF FACILITY: xxx — BMP ID: 176

FEATURE	DESIGN	*AS-BUILT
DRAINAGE AREA (AC)	0.14	
TOTAL IMPERVIOUS AREA (AC)	0.07	
TREATMENT VOLUME PROVIDED (CF)	245	
TARGET WQv TREATMENT VOLUME (CF)	254	
FILTER BED AREA (SF) [1]	113	
FILTER BED SURFACE ELEVATION	276.00	
DESIGN POINT/MAX. PONDING ELEVATION	276.60	
PONDED WATER SURFACE ELEVATION AREA (SF) [2]	192	
OUTLET PIPE (UNDERDRAIN) SIZE / INVERT ELEV.	N / A	
THICKNESS OF FILTER MEDIA	REFER TO PROFILE	
PLACEMENT OF GEOTEXTILE (SIDES ONLY)	REFER TO FACILITY TYP. SECTION – SHEET 9	
PLANTINGS	REFER TO LANDSCAPE PLAN – SHEET 52	
COMPOSITION OF FILTER MEDIA	REFER TO MCDEP SPECIFICATIONS	

COMBINATION CONC. CURB AND GUTTER

STA. TO STA.	L.F.	REMARKS
363+96, RT TO 364+06, RT	10	TRANSITION TYPE A TO TYPE C
364+06, RT TO 364+31, RT	25	TYPE A, MC.100.01
364+36, RT TO 364+42, RT	7	TYPE A, MC.100.01
362+80, RT TO 363+10, RT	30	TYPE A, MC.100.01
363+16, RT TO 363+24, RT	8	TYPE A, MC.100.01
363+24, RT TO 363+34, RT	10	TRANSITION TYPE A TO TYPE C

10' 0 10' 20'
SCALE: 1"=10'

McCormick Taylor
Engineers & Planners Since 1946
509 South Exater Street
4th Floor
Baltimore, Maryland 21202
(410) 662-7400

PLAN AND PROFILE - BMP 175 & 176

FRANKLIN KNOLLS-PHASE 4

SLIGO (13th) ELECTION DISTRICT

PARCEL X, SUBDIVISION X, LIBER X FOLIO X

MONTGOMERY COUNTY, MARYLAND

CLIENT: MONTGOMERY COUNTY DEPT OF ENVIRONMENTAL PROTECTION
255 ROCKVILLE PIKE, RM. 120
ROCKVILLE, MD 20850-4166
MR. PAUL BOGLE, P.E.
(240) 777-7757

DESIGN	KCS	DATE	JUNE 2014
DRAFT	WJW	SCALE	1"=10'
APPROVED	HJD		

SHEET 41 OF 52

FILE: I:\5152\13 - Roadway LID - Forest Estates and the Four Corners Area\Design\Engineering\Plans\Set\Fk P4\pd-D-P039_FK4_BMP-175_176.dgn
PLOTTED: Thursday, June 05, 2014 AT 02:47 PM

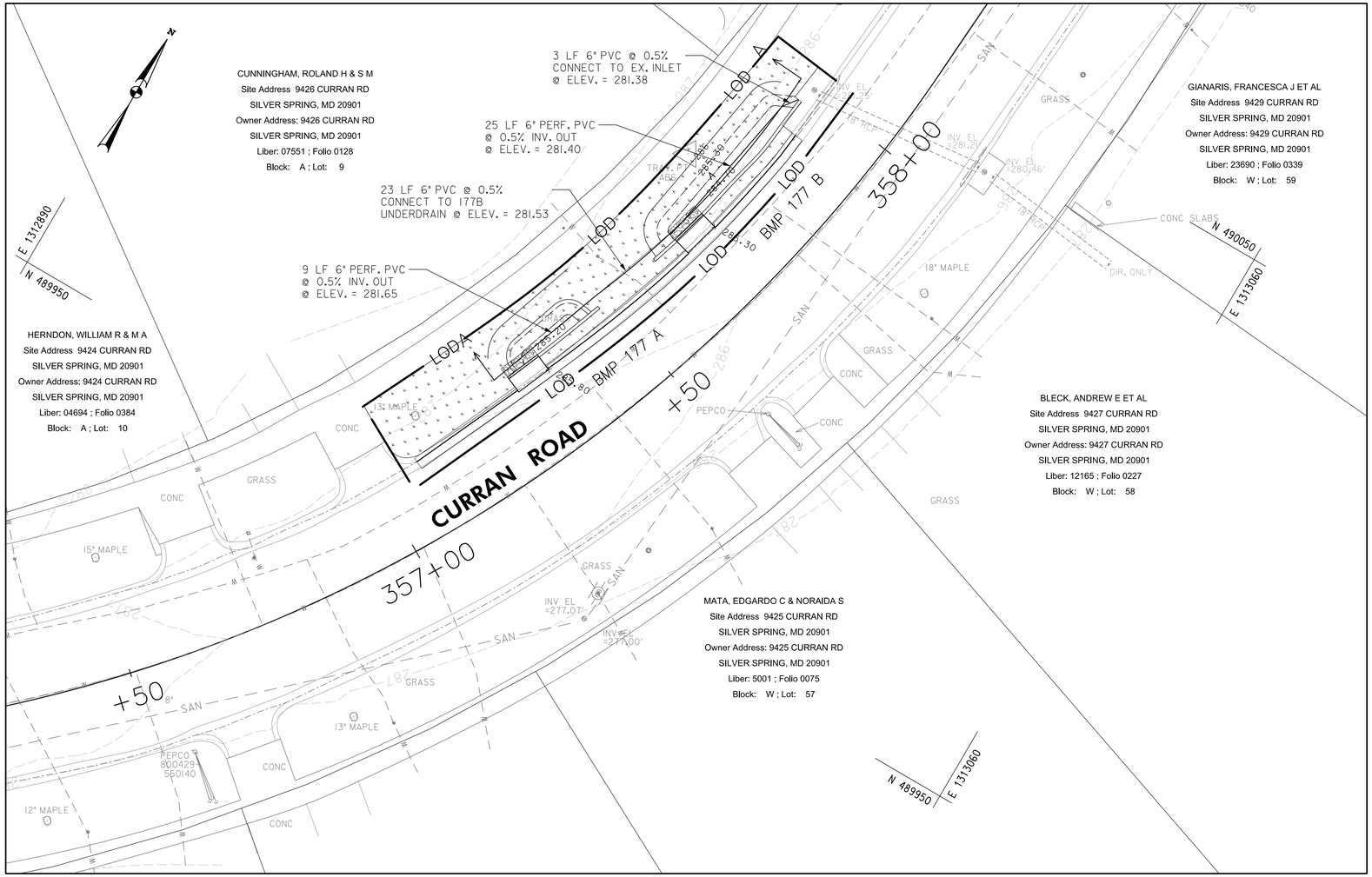

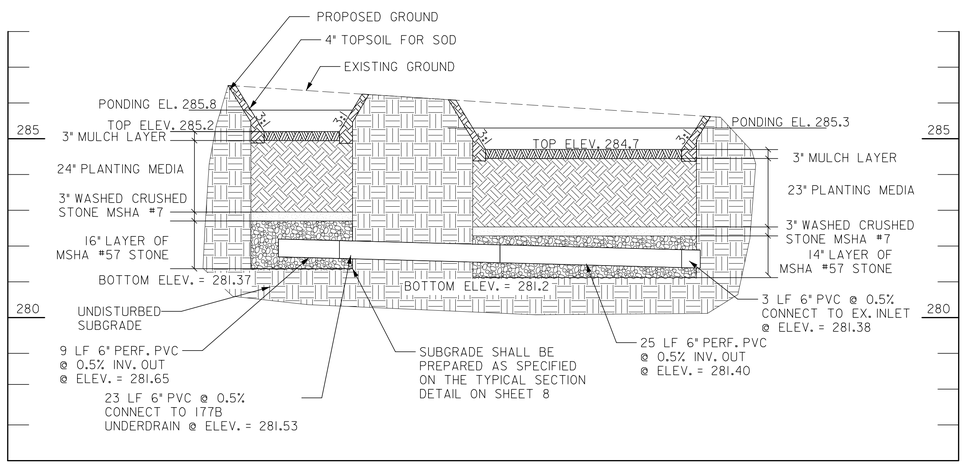

PROFILE (A-A) - RAIN GARDEN FACILITY (BMP 177 A/B)

SCALE: HORIZ. 1"=10'
VERT. 1"=2'

AS-BUILT DATA FOR FILTERS (BIORETENTION/RAIN GARDENS)

*TO BE COMPLETED BY THE CERTIFYING ENGINEER

TYPE OF FACILITY: BIORETENTION — BMP ID: 177 A/B

FEATURE	DESIGN	*AS-BUILT
DRAINAGE AREA (AC)	3.78	
TOTAL IMPERVIOUS AREA (AC)	0.89	
TREATMENT VOLUME PROVIDED (CF)	242	
TARGET WQv TREATMENT VOLUME (CF)	3,594	
FILTER BED AREA (SF) [1]	22 / 79	
FILTER BED SURFACE ELEVATION	284.70 / 285.20	
DESIGN POINT/MAX. PONDING ELEVATION	285.30 / 285.80	
PONDED WATER SURFACE ELEVATION AREA (SF) [2]	52 / 141	
OUTLET PIPE (UNDERDRAIN) SIZE / INVERT ELEV.	N/A / 6"/281.38	
THICKNESS OF FILTER MEDIA	REFER TO PROFILE	
PLACEMENT OF GEOTEXTILE (SIDES ONLY)	REFER TO FACILITY TYP. SECTION – SHEET 9	
PLANTINGS	REFER TO LANDSCAPE PLAN – SHEET 52	
COMPOSITION OF FILTER MEDIA	REFER TO MCDEP SPECIFICATIONS	

*NOTES:
1. "FILTER BED AREA (SF)" REPRESENTS THE EXPOSED SURFACE AREA AT THE PROPOSED "FILTER BED SURFACE ELEVATION".
2. FOR MATERIAL QUANTITY ESTIMATIONS, THE PLANTING MEDIA, STONE, MULCH, ETC. SHOULD BE BASED ON THE AREA OF "PONDED WATER SURFACE ELEVATION AREA (SF)".
3. CONTRACTOR SHALL TEST PIT UTILITIES PRIOR TO CONSTRUCTION. IF UTILITY IS UNAVOIDABLE, CONTRACTOR SHALL REFER TO SHEET 8 FOR UTILITY CROSSING DETAIL WITHIN THE FACILITY.

COMBINATION CONC. CURB AND GUTTER

STA. TO STA.	L.F.	REMARKS
357+07, LT TO 357+18, LT	10	TRANSITION TYPE A TO TYPE C
357+18, LT TO 357+28, LT	9	TYPE A, MC.100.01
357+35, LT TO 357+66, LT	29	TYPE A, MC.100.01
357+72, LT TO 357+93, LT	20	TYPE A, MC.100.01

10' 0 10' 20'
SCALE: 1"=10'

McCormick Taylor
Engineers & Planners Since 1946
509 South Exater Street
4th Floor
Baltimore, Maryland 21202
(410) 662-7400

PLAN AND PROFILE - BMP 177A & 177B

FRANKLIN KNOLLS-PHASE 4

SLIGO (13th) ELECTION DISTRICT

PARCEL X, SUBDIVISION X, LIBER X FOLIO X

MONTGOMERY COUNTY, MARYLAND

CLIENT: MONTGOMERY COUNTY DEPT OF ENVIRONMENTAL PROTECTION
255 ROCKVILLE PIKE, RM. 120
ROCKVILLE, MD 20850-4166
MR. PAUL BOGLE, P.E.
(240) 777-7757

DESIGN	KCS
DRAFT	WJW
APPROVED	HJD
DATE	JUNE 2014
SCALE	1"=10'

SHEET 42 OF 52

FILE: [:\51812\13 - Roadway LID - Forest Estates and the Four Corners Area\Design\Engineering\PlanSet\FK P4\gHD-P038a_FK4_BMP-177.dgn
PLOTTED: Thursday, June 05, 2014 AT 02:47 PM

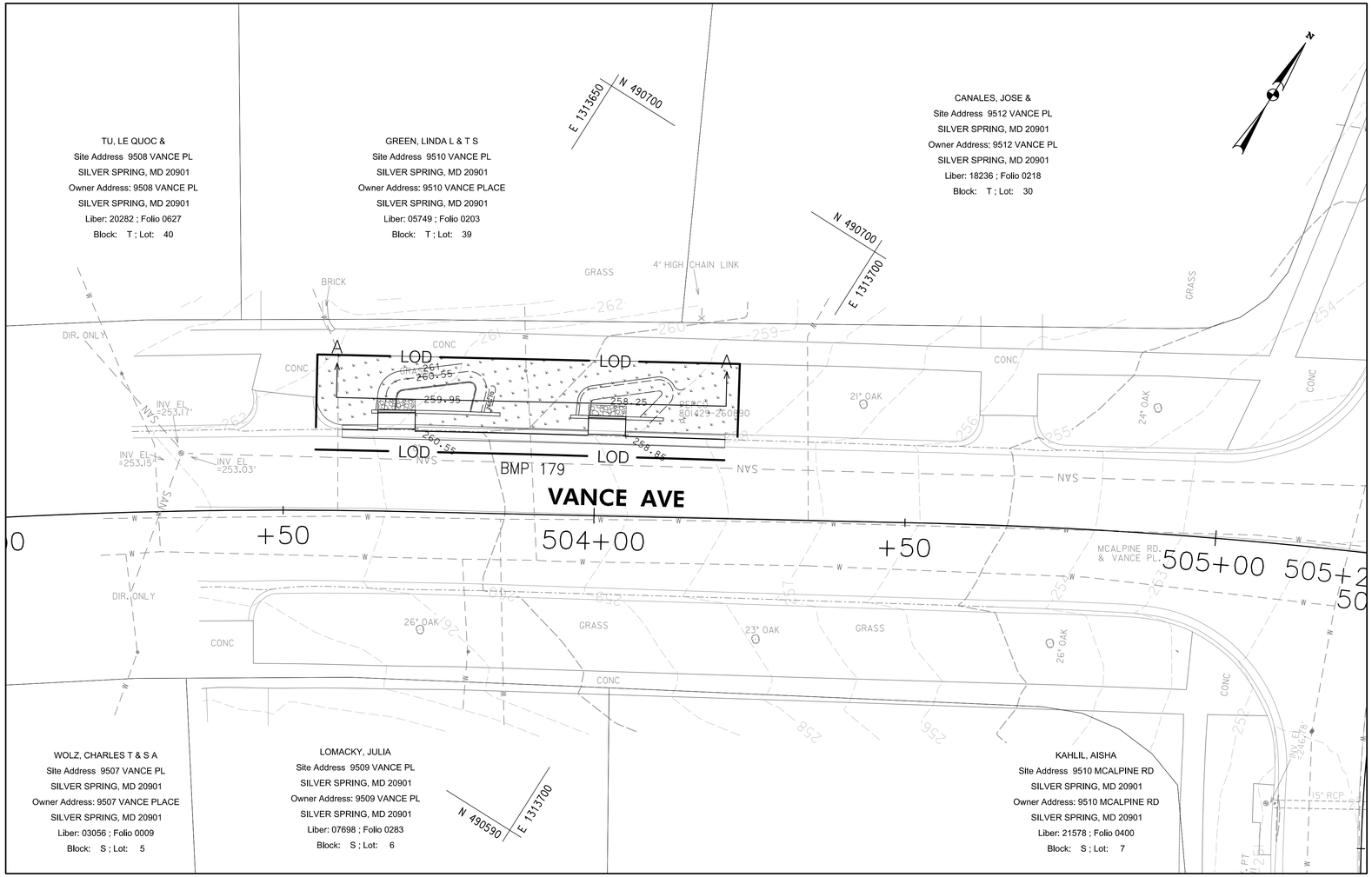

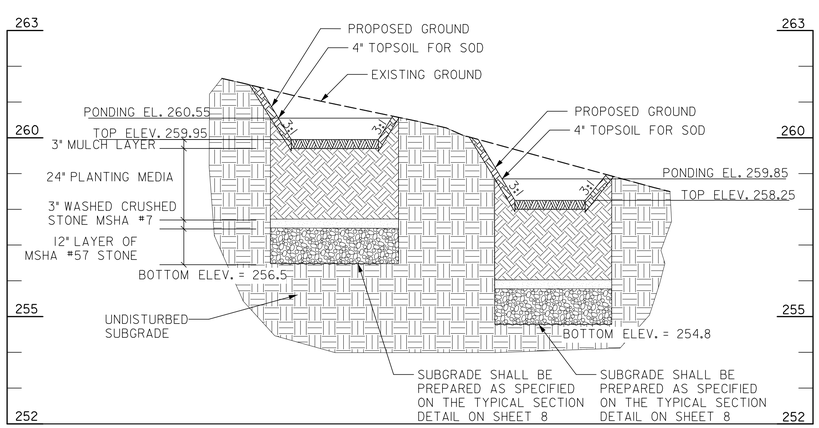

PROFILE (A-A) - RAIN GARDEN FACILITY (BMP 179)

SCALE: HORIZ. 1"=10'
VERT. 1"=2'

AS-BUILT DATA FOR FILTERS (BIORETENTION/RAIN GARDENS)

*TO BE COMPLETED BY THE CERTIFYING ENGINEER

TYPE OF FACILITY: RAIN GARDEN — BMP ID: 179

FEATURE	DESIGN	*AS-BUILT
DRAINAGE AREA (AC)	0.78	
TOTAL IMPERVIOUS AREA (AC)	0.25	
TREATMENT VOLUME PROVIDED (CF)	200	
TARGET WQv TREATMENT VOLUME (CF)	957	
FILTER BED AREA (SF) [1]	129	
FILTER BED SURFACE ELEVATION	258.25, 259.95	
DESIGN POINT/MAX. PONDING ELEVATION	259.85, 260.55	
PONDED WATER SURFACE ELEVATION AREA (SF) [2]	212	
OUTLET PIPE (UNDERDRAIN) SIZE / INVERT ELEV.	N / A	
THICKNESS OF FILTER MEDIA	REFER TO PROFILE	
PLACEMENT OF GEOTEXTILE (SIDES ONLY)	REFER TO FACILITY TYP. SECTION – SHEET 9	
PLANTINGS	REFER TO LANDSCAPE PLAN – SHEET 52	
COMPOSITION OF FILTER MEDIA	REFER TO MCDEP SPECIFICATIONS	

*NOTES:

1. "FILTER BED AREA (SF)" REPRESENTS THE EXPOSED SURFACE AREA AT THE PROPOSED "FILTER BED SURFACE ELEVATION".
2. FOR MATERIAL QUANTITY ESTIMATIONS, THE PLANTING MEDIA, STONE, MULCH, ETC. SHOULD BE BASED ON THE AREA OF "PONDED WATER SURFACE ELEVATION AREA (SF)".
3. CONTRACTOR SHALL TEST PIT UTILITIES PRIOR TO CONSTRUCTION. IF UTILITY IS UNAVOIDABLE, CONTRACTOR SHALL REFER TO SHEET 8 FOR UTILITY CROSSING DETAIL WITHIN THE FACILITY.

COMBINATION CONC. CURB AND GUTTER

STA. TO STA.	L.F.	REMARKS
503+59, LT TO 503+65, LT	6	TYPE A, MC.100.01
503+71, LT TO 503+99, LT	28	TYPE A, MC.100.01
504+05, LT TO 504+11, LT	6	TYPE A, MC.100.01
504+11, LT TO 504+21, LT	10	TRANSITION TYPE A TO TYPE C

10' 0 10' 20'
SCALE: 1"=10'

McCormick Taylor
Engineers & Planners Since 1946
509 South Exeter Street
4th Floor
Baltimore, Maryland 21202
(410) 662-7400

PLAN AND PROFILE - BMP 179
FRANKLIN KNOLLS-PHASE 4
SLIGO (13th) ELECTION DISTRICT
PARCEL X, SUBDIVISION X, LIBER X FOLIO X
MONTGOMERY COUNTY, MARYLAND

CLIENT: MONTGOMERY COUNTY DEPT OF ENVIRONMENTAL PROTECTION
255 ROCKVILLE PIKE, RM. 120
ROCKVILLE, MD 20850-4166
MR. PAUL BOGLE, P.E.
(240) 777-7757

DESIGN	KCS
DRAFT	WJW
APPROVED	HJD
DATE	JUNE 2014
SCALE	1"=10'

SHEET 43 OF 52

FILE: I:\51\52\13 - Roadway LID - Forest Estates and the Four Corners Area\Design\Engineering\PlanSet\FK Ph4\HD-P039_FK4_BMP-179.dgn
PLOTTED: Thursday, June 05, 2014 AT 02:47 PM

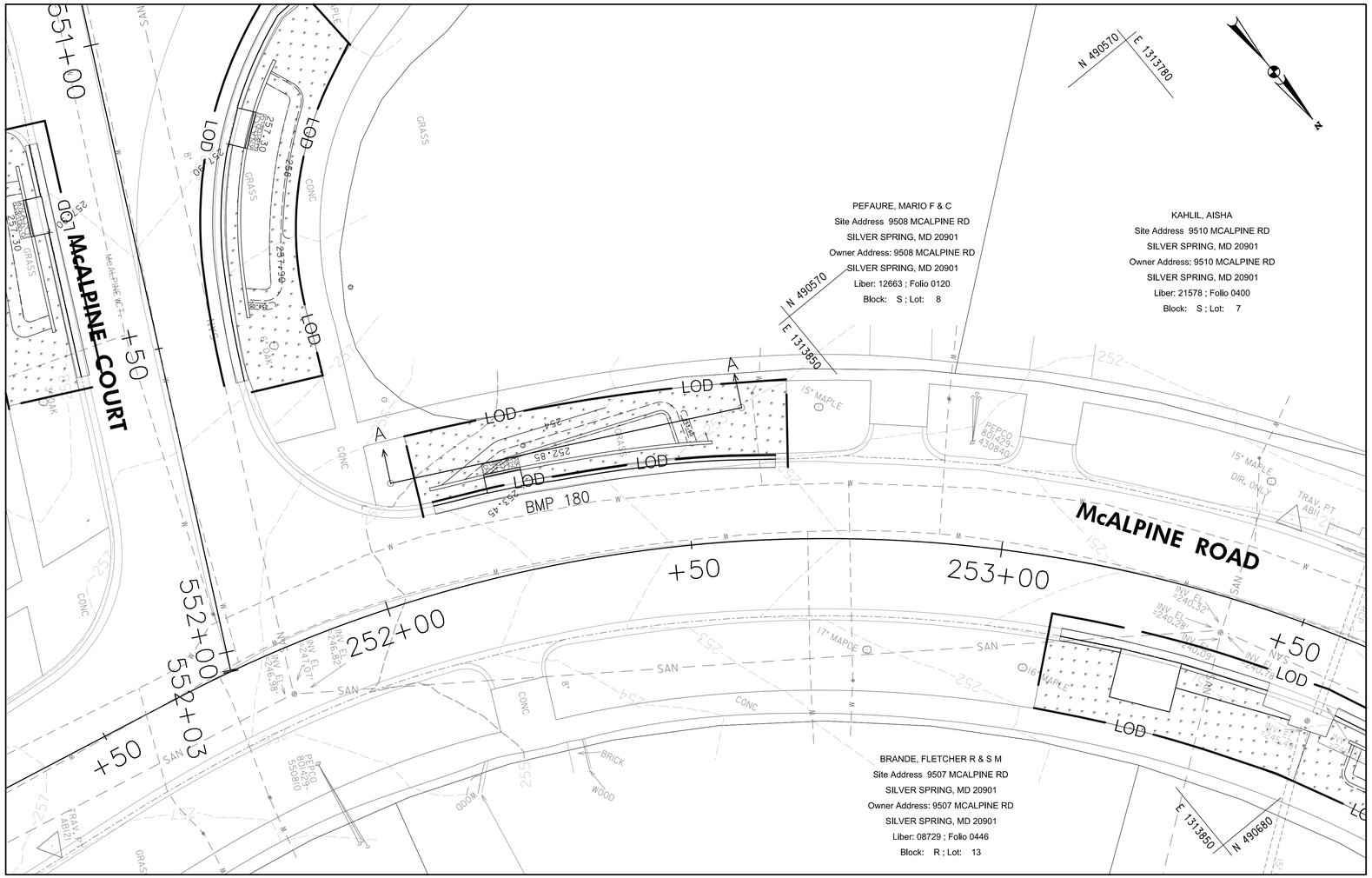

AS-BUILT DATA FOR FILTERS (BIORETENTION/RAIN GARDENS)

*TO BE COMPLETED BY THE CERTIFYING ENGINEER

TYPE OF FACILITY: RAIN GARDEN — BMP ID: 180

FEATURE	DESIGN	*AS-BUILT
DRAINAGE AREA (AC)	0.32	
TOTAL IMPERVIOUS AREA (AC)	0.13	
TREATMENT VOLUME PROVIDED (CF)	200	
TARGET WQv TREATMENT VOLUME (CF)	481	
FILTER BED AREA (SF) [1]	80	
FILTER BED SURFACE ELEVATION	252.85	
DESIGN POINT/MAX. PONDING ELEVATION	253.45	
PONDED WATER SURFACE ELEVATION AREA (SF) [2]	160	
OUTLET PIPE (UNDERDRAIN) SIZE / INVERT ELEV.	N / A	
THICKNESS OF FILTER MEDIA	REFER TO PROFILE	
PLACEMENT OF GEOTEXTILE (SIDES ONLY)	REFER TO FACILITY TYP. SECTION – SHEET 9	
PLANTINGS	REFER TO LANDSCAPE PLAN – SHEET 52	
COMPOSITION OF FILTER MEDIA	REFER TO MCDEP SPECIFICATIONS	

*NOTES:

1. "FILTER BED AREA (SF)" REPRESENTS THE EXPOSED SURFACE AREA AT THE PROPOSED "FILTER BED SURFACE ELEVATION".
2. FOR MATERIAL QUANTITY ESTIMATIONS, THE PLANTING MEDIA, STONE, MULCH, ETC. SHOULD BE BASED ON THE AREA OF "PONDED WATER SURFACE ELEVATION AREA (SF)".
3. CONTRACTOR SHALL TEST PIT UTILITIES PRIOR TO CONSTRUCTION. IF UTILITY IS UNAVOIDABLE, CONTRACTOR SHALL REFER TO SHEET 8 FOR UTILITY CROSSING DETAIL WITHIN THE FACILITY.

COMBINATION CONC. CURB AND GUTTER

STA. TO STA.	L.F.	REMARKS
252+11, LT TO252+20, LT	9	TYPE A, MC.100.01
252+26, LT TO 252+55, LT	31	TYPE A, MC.100.01
252+55, LT TO 252+64, LT	10	TRANSITION TYPE A TO TYPE C

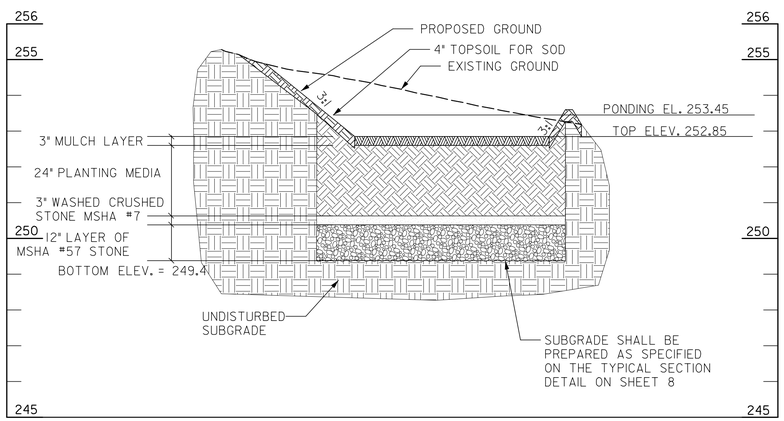

PROFILE (A-A) - RAIN GARDEN FACILITY (BMP 180)

SCALE: HORIZ. 1"=10'
VERT. 1"=2'

10' 0 10' 20'
SCALE: 1"=10'

McCormick Taylor
Engineers & Planners
Since 1946
509 South Exeter Street
4th Floor
Baltimore, Maryland 21202
(410) 662-7400

PLAN AND PROFILE - BMP 180

FRANKLIN KNOLLS-PHASE 4

SLIGO (13th) ELECTION DISTRICT

PARCEL X, SUBDIVISION X, LIBER X FOLIO X

MONTGOMERY COUNTY, MARYLAND

CLIENT: MONTGOMERY COUNTY DEPT OF ENVIRONMENTAL PROTECTION
255 ROCKVILLE PIKE, RM. 120
ROCKVILLE, MD 20850-4166
MR. PAUL BOGLE, P.E.
(240) 777-7757

DESIGN	KCS
DRAFT	WJW
APPROVED	HJD
DATE	JUNE 2014
SCALE	1"=10'

SHEET 44 OF 52

FILE: I:\5192\13 - Roadway LID - Forest Estates and the Four Corners Area\Design\Engineering\PlanSet\FK P4\grd\D-P000_FK4_BMP-180.dgn
PLOTTED: Thursday, June 05, 2014 AT 02:47 PM

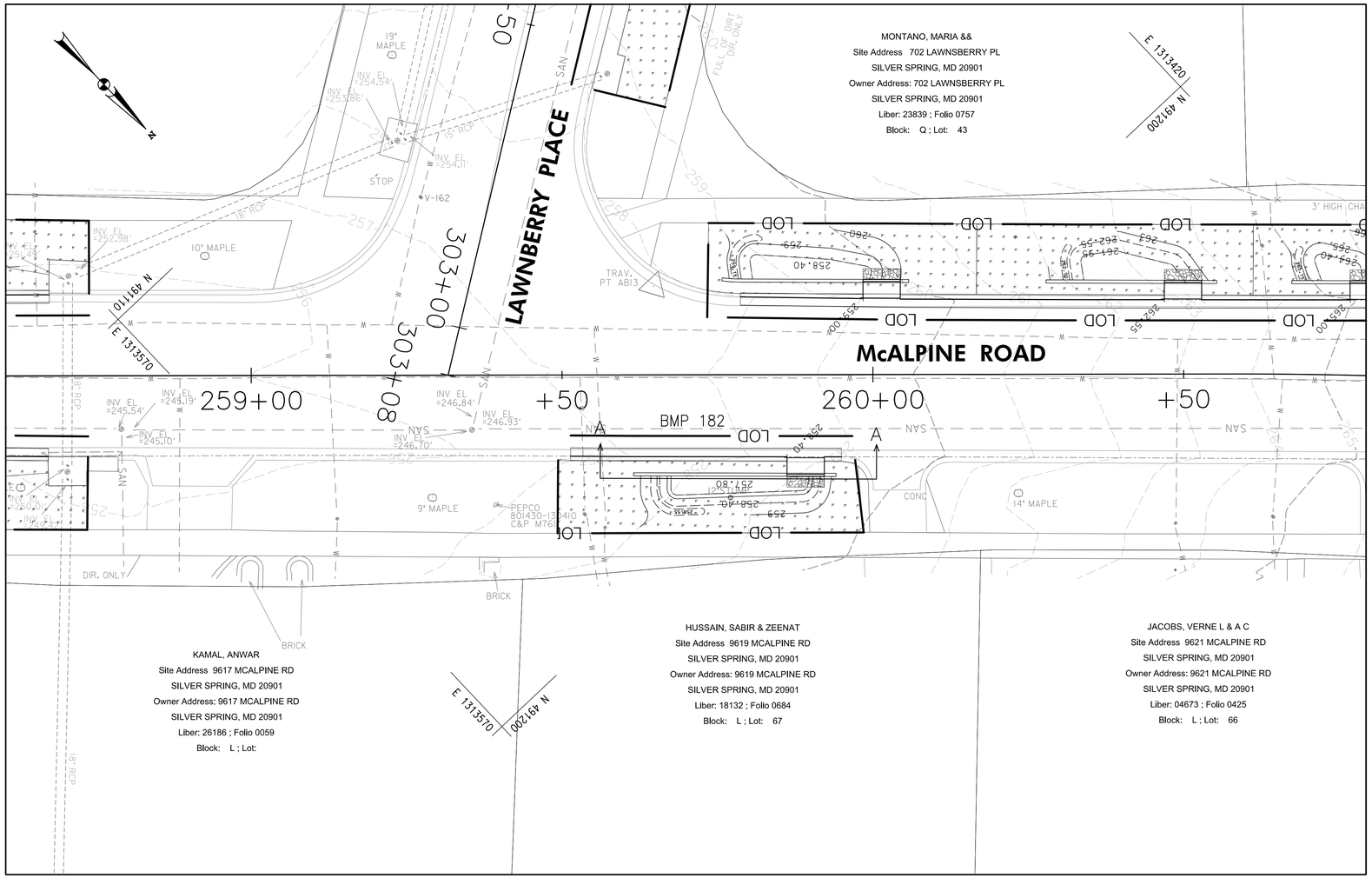

AS-BUILT DATA FOR FILTERS (BIORETENTION/RAIN GARDENS)

*TO BE COMPLETED BY THE CERTIFYING ENGINEER

TYPE OF FACILITY: RAIN GARDEN — BMP ID: 182

FEATURE	DESIGN	*AS-BUILT
DRAINAGE AREA (AC)	0.34	
TOTAL IMPERVIOUS AREA (AC)	0.16	
TREATMENT VOLUME PROVIDED (CF)	141	
TARGET WQv TREATMENT VOLUME (CF)	584	
FILTER BED AREA (SF) [1]	59	
FILTER BED SURFACE ELEVATION	257.80	
DESIGN POINT/MAX. PONDING ELEVATION	258.40	
PONDED WATER SURFACE ELEVATION AREA (SF) [2]	112	
OUTLET PIPE (UNDERDRAIN) SIZE / INVERT ELEV.	N / A	
THICKNESS OF FILTER MEDIA	REFER TO PROFILE	
PLACEMENT OF GEOTEXTILE (SIDES ONLY)	REFER TO FACILITY TYP. SECTION – SHEET 9	
PLANTINGS	REFER TO LANDSCAPE PLAN – SHEET 52	
COMPOSITION OF FILTER MEDIA	REFER TO MCDEP SPECIFICATIONS	

*NOTES:

1. "FILTER BED AREA (SF)" REPRESENTS THE EXPOSED SURFACE AREA AT THE PROPOSED "FILTER BED SURFACE ELEVATION".
2. FOR MATERIAL QUANTITY ESTIMATIONS, THE PLANTING MEDIA, STONE, MULCH, ETC. SHOULD BE BASED ON THE AREA OF "PONDED WATER SURFACE ELEVATION AREA (SF)".
3. CONTRACTOR SHALL TEST PIT UTILITIES PRIOR TO CONSTRUCTION. IF UTILITY IS UNAVOIDABLE, CONTRACTOR SHALL REFER TO SHEET 8 FOR UTILITY CROSSING DETAIL WITHIN THE FACILITY.

COMBINATION CONC. CURB AND GUTTER

STA. TO STA.	L.F.	REMARKS
259+51, RT TO 259+61, RT	10	TRANSITION TYPE A TO TYPE C
259+61, RT TO 259+86, RT	25	TYPE A, MC.100.01
259+92, RT TO 259+95, RT	3	TYPE A, MC.100.01

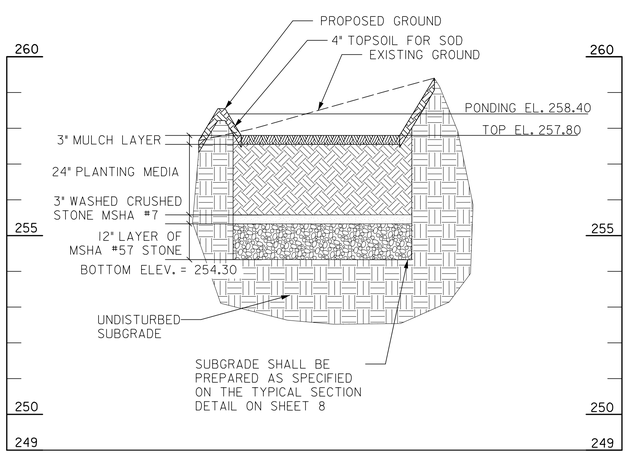

PROFILE (A-A) - RAIN GARDEN FACILITY (BMP 182)

SCALE: HORIZ. 1"=10'
VERT. 1"=2'

10' 0 10' 20'
SCALE: 1"=10'

McCormick Taylor
Engineers & Planners Since 1946
509 South Exeter Street
4th Floor
Baltimore, Maryland 21202
(410) 662-7400

PLAN AND PROFILE - BMP 182
FRANKLIN KNOLLS-PHASE 4
SLIGO (13th) ELECTION DISTRICT
PARCEL X, SUBDIVISION X, LIBER X FOLIO X
MONTGOMERY COUNTY, MARYLAND

CLIENT: MONTGOMERY COUNTY DEPT OF ENVIRONMENTAL PROTECTION
255 ROCKVILLE PIKE, RM. 120
ROCKVILLE, MD 20850-4166
MR. PAUL BOGLE, P.E.
(240) 777-7757

DESIGN	KCS
DRAFT	WJW
APPROVED	HJD
DATE	JUNE 2014
SCALE	1"=10'

SHEET 45 OF 52

FILE: I:\53182\13 - Roadway LID - Forest Estates and the Four Corners Area\Design\Engineering\PlanSet\FK P4\p4D-P041_FK4_BMP-182.dgn
PLOTTED: Thursday, June 05, 2014 AT 02:47 PM

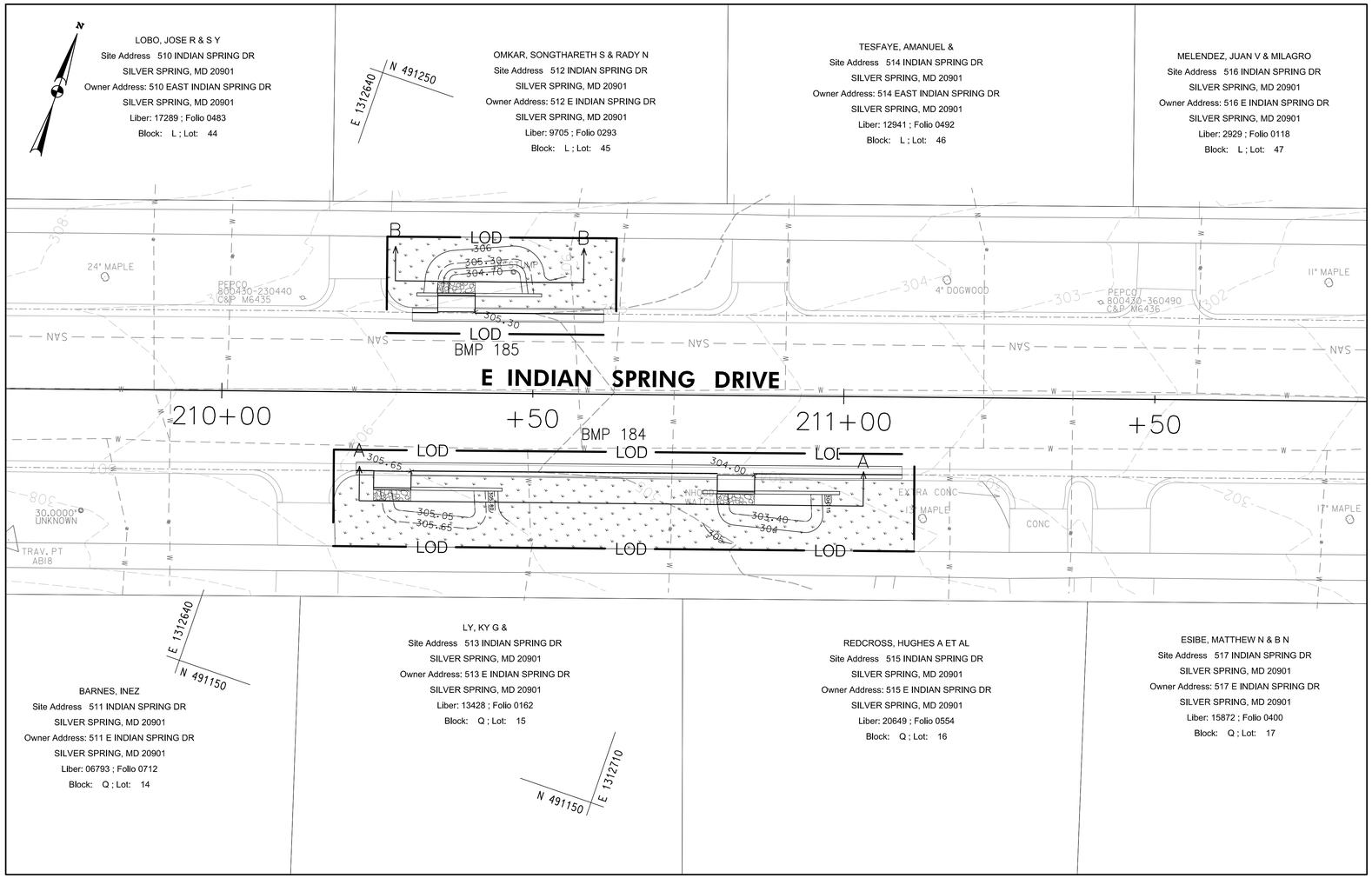

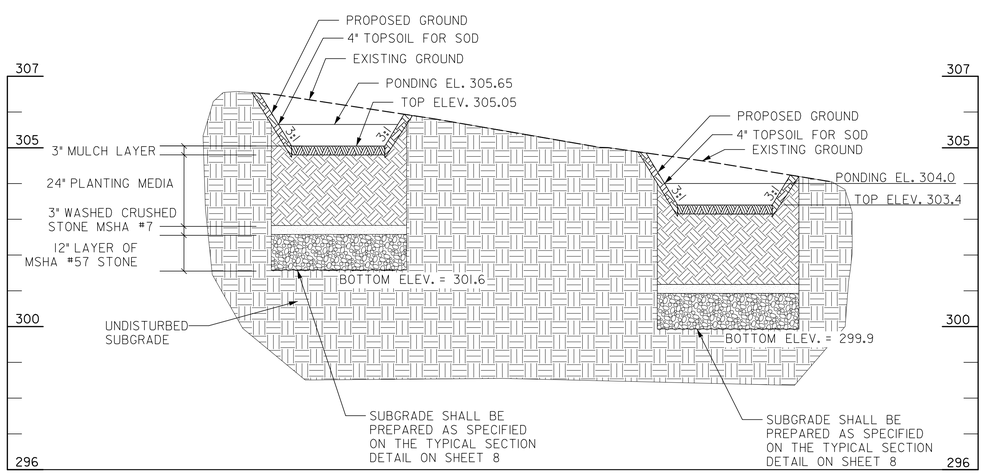

PROFILE (B-B) - RAIN GARDEN FACILITY (BMP 184)

SCALE: HORIZ. 1"=10'
VERT. 1"=2'

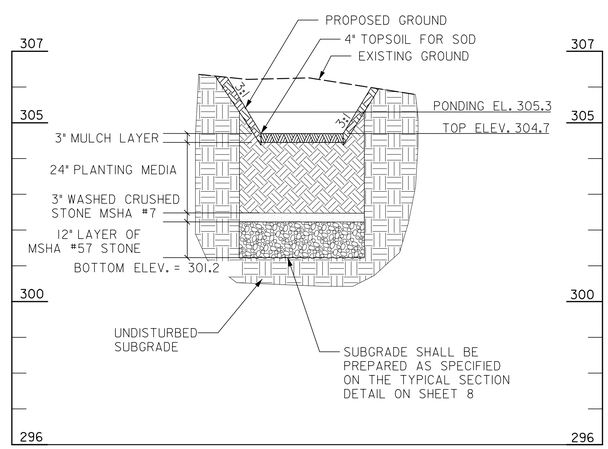

PROFILE (B-B) - RAIN GARDEN FACILITY (BMP 185)

SCALE: HORIZ. 1"=10'
VERT. 1"=2'

AS-BUILT DATA FOR FILTERS (BIORETENTION/RAIN GARDENS)

*TO BE COMPLETED BY THE CERTIFYING ENGINEER

TYPE OF FACILITY: RAIN GARDEN — BMP ID: 184

FEATURE	DESIGN	*AS-BUILT
DRAINAGE AREA (AC)	0.45	
TOTAL IMPERVIOUS AREA (AC)	0.18	
TREATMENT VOLUME PROVIDED (CF)	229	
TARGET WQv TREATMENT VOLUME (CF)	477	
FILTER BED AREA (SF) [1]	99	
FILTER BED SURFACE ELEVATION	303.40, 305.05	
DESIGN POINT/MAX. PONDING ELEVATION	304.00, 305.65	
PONDED WATER SURFACE ELEVATION AREA (SF) [2]	181	
OUTLET PIPE (UNDERDRAIN) SIZE / INVERT ELEV.	N / A	
THICKNESS OF FILTER MEDIA	REFER TO PROFILE	
PLACEMENT OF GEOTEXTILE (SIDES ONLY)	REFER TO FACILITY TYP. SECTION – SHEET 9	
PLANTINGS	REFER TO LANDSCAPE PLAN – SHEET 52	
COMPOSITION OF FILTER MEDIA	REFER TO MCDEP SPECIFICATIONS	

*NOTES:
1. "FILTER BED AREA (SF)" REPRESENTS THE EXPOSED SURFACE AREA AT THE PROPOSED "FILTER BED SURFACE ELEVATION".
2. FOR MATERIAL QUANTITY ESTIMATIONS, THE PLANTING MEDIA, STONE, MULCH, ETC. SHOULD BE BASED ON THE AREA OF "PONDED WATER SURFACE ELEVATION AREA (SF)".
3. CONTRACTOR SHALL TEST PIT UTILITIES PRIOR TO CONSTRUCTION. IF UTILITY IS UNAVOIDABLE, CONTRACTOR SHALL REFER TO SHEET 8 FOR UTILITY CROSSING DETAIL WITHIN THE FACILITY.

AS-BUILT DATA FOR FILTERS (BIORETENTION/RAIN GARDENS)

*TO BE COMPLETED BY THE CERTIFYING ENGINEER

TYPE OF FACILITY: RAIN GARDEN — BMP ID: 185

FEATURE	DESIGN	*AS-BUILT
DRAINAGE AREA (AC)	0.31	
TOTAL IMPERVIOUS AREA (AC)	0.14	
TREATMENT VOLUME PROVIDED (CF)	94	
TARGET WQv TREATMENT VOLUME (CF)	514	
FILTER BED AREA (SF) [1]	39	
FILTER BED SURFACE ELEVATION	304.70	
DESIGN POINT/MAX. PONDING ELEVATION	305.30	
PONDED WATER SURFACE ELEVATION AREA (SF) [2]	75	
OUTLET PIPE (UNDERDRAIN) SIZE / INVERT ELEV.	N / A	
THICKNESS OF FILTER MEDIA	REFER TO PROFILE	
PLACEMENT OF GEOTEXTILE (SIDES ONLY)	REFER TO FACILITY TYP. SECTION – SHEET 9	
PLANTINGS	REFER TO LANDSCAPE PLAN – SHEET 52	
COMPOSITION OF FILTER MEDIA	REFER TO MCDEP SPECIFICATIONS	

COMBINATION CONC. CURB AND GUTTER

STA. TO STA.	L.F.	REMARKS
210+22, RT TO 210+25, RT	3	TYPE A, MC.100.01
210+31, RT TO 210+80, RT	49	TYPE A, MC.100.01
210+86, RT TO 210+99, RT	14	TYPE A, MC.100.01
210+99, RT TO 211+09, RT	10	TRANSITION TYPE A TO TYPE C
210+31, LT TO 210+35, LT	4	TYPE A, MC.100.01
210+41, LT TO 210+51, LT	11	TYPE A, MC.100.01
210+51, LT TO 210+61, LT	10	TRANSITION TYPE A TO TYPE C

10' 0 10' 20'
SCALE: 1"=10'

509 South Exeter Street
4th Floor
Baltimore, Maryland 21202
(410) 662-7400

McCormick Taylor
Engineers & Planners
Since 1946

PLAN AND PROFILE - BMP 184 & 185

FRANKLIN KNOLLS-PHASE 4

SLIGO (13th) ELECTION DISTRICT

PARCEL X, SUBDIVISION X, LIBER X FOLIO X

MONTGOMERY COUNTY, MARYLAND

CLIENT: MONTGOMERY COUNTY DEPT OF ENVIRONMENTAL PROTECTION
255 ROCKVILLE PIKE, RM. 120
ROCKVILLE, MD 20850-4166
MR. PAUL BOGLE, P.E.
(240) 777-7757

DESIGN	KCS		
DRAFT	WJW		
APPROVED	HJD		
DATE	JUNE 2014		
SCALE	1"=10'		

SHEET 46 OF 52

FILE: I:\31\12\13 - Roadway LID – Forest Estates and the Four Corners Area\Design\Engineering\PlanSet\FK Ph\pH\D-PH43_FK4_BMP-184_185.dgn
PLOTTED: Thursday, June 05, 2014 AT 02:47 PM

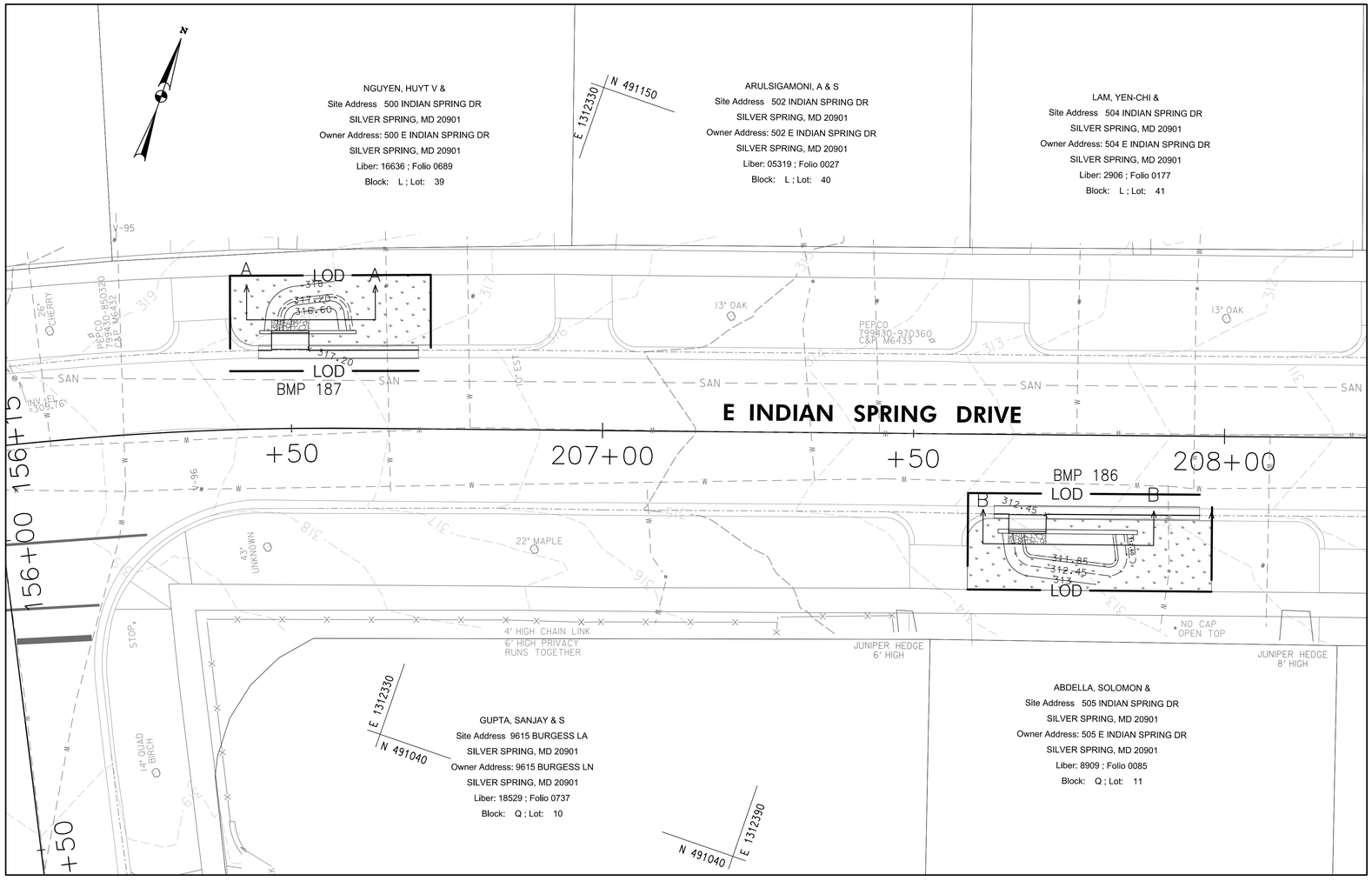

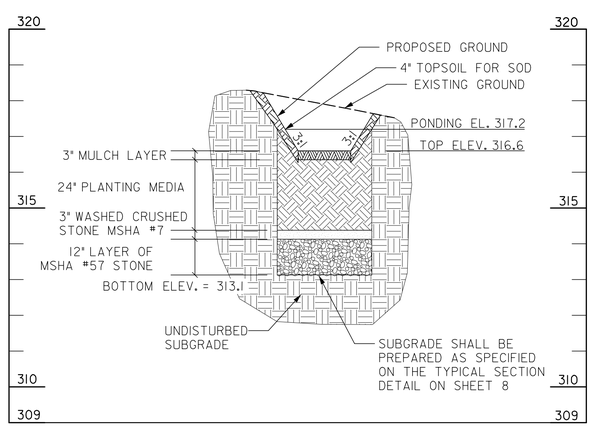

PROFILE (A-A) - RAIN GARDEN FACILITY (BMP 187)

SCALE: HORIZ. 1"=10'
VERT. 1"=2'

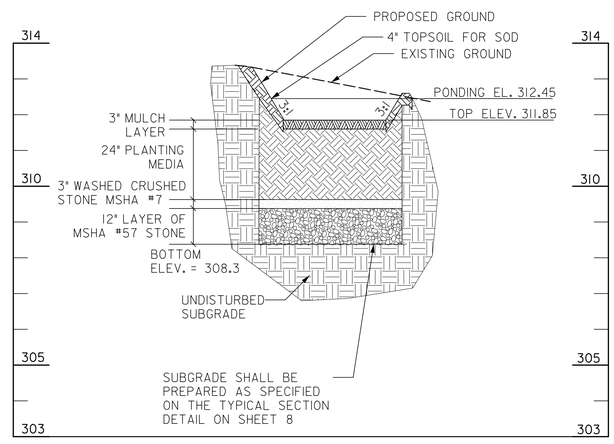

PROFILE (B-B) - RAIN GARDEN FACILITY (BMP 186)

SCALE: HORIZ. 1"=10'
VERT. 1"=2'

AS-BUILT DATA FOR FILTERS (BIORETENTION/RAIN GARDENS)

*TO BE COMPLETED BY THE CERTIFYING ENGINEER

TYPE OF FACILITY: RAIN GARDEN — BMP ID:186

FEATURE	DESIGN	*AS-BUILT
DRAINAGE AREA (AC)	0.26	
TOTAL IMPERVIOUS AREA (AC)	0.10	
TREATMENT VOLUME PROVIDED (CF)	131	
TARGET WQv TREATMENT VOLUME (CF)	374	
FILTER BED AREA (SF) [1]	59	
FILTER BED SURFACE ELEVATION	311.85	
DESIGN POINT/MAX. PONDING ELEVATION	312.45	
PONDED WATER SURFACE ELEVATION AREA (SF) [2]	103	
OUTLET PIPE (UNDERDRAIN) SIZE / INVERT ELEV.	N / A	
THICKNESS OF FILTER MEDIA	REFER TO PROFILE	
PLACEMENT OF GEOTEXTILE (SIDES ONLY)	REFER TO FACILITY TYP. SECTION – SHEET 9	
PLANTINGS	REFER TO LANDSCAPE PLAN – SHEET 52	
COMPOSITION OF FILTER MEDIA	REFER TO MCDEP SPECIFICATIONS	

*NOTES:

1. "FILTER BED AREA (SF)" REPRESENTS THE EXPOSED SURFACE AREA AT THE PROPOSED "FILTER BED SURFACE ELEVATION".
2. FOR MATERIAL QUANTITY ESTIMATIONS, THE PLANTING MEDIA, STONE, MULCH, ETC. SHOULD BE BASED ON THE AREA OF "PONDED WATER SURFACE ELEVATION AREA (SF)".
3. CONTRACTOR SHALL TEST PIT UTILITIES PRIOR TO CONSTRUCTION. IF UTILITY IS UNAVOIDABLE, CONTRACTOR SHALL REFER TO SHEET 8 FOR UTILITY CROSSING DETAIL WITHIN THE FACILITY.

AS-BUILT DATA FOR FILTERS (BIORETENTION/RAIN GARDENS)

*TO BE COMPLETED BY THE CERTIFYING ENGINEER

TYPE OF FACILITY: RAIN GARDEN — BMP ID: 187

FEATURE	DESIGN	*AS-BUILT
DRAINAGE AREA (AC)	0.21	
TOTAL IMPERVIOUS AREA (AC)	0.08	
TREATMENT VOLUME PROVIDED (CF)	149	
TARGET WQv TREATMENT VOLUME (CF)	299	
FILTER BED AREA (SF) [1]	24	
FILTER BED SURFACE ELEVATION	316.60	
DESIGN POINT/MAX. PONDING ELEVATION	317.20	
PONDED WATER SURFACE ELEVATION AREA (SF) [2]	129	
OUTLET PIPE (UNDERDRAIN) SIZE / INVERT ELEV.	N / A	
THICKNESS OF FILTER MEDIA	REFER TO PROFILE	
PLACEMENT OF GEOTEXTILE (SIDES ONLY)	REFER TO FACILITY TYP. SECTION – SHEET 9	
PLANTINGS	REFER TO LANDSCAPE PLAN – SHEET 52	
COMPOSITION OF FILTER MEDIA	REFER TO MCDEP SPECIFICATIONS	

COMBINATION CONC. CURB AND GUTTER

STA. TO STA.	L.F.	REMARKS
206+45, LT TO 206+47, LT	2	TYPE A, MC.100.01
206+53, LT TO 206+60, LT	8	TYPE A, MC.100.01
206+60, LT TO 206+70, LT	10	TRANSITION TYPE A TO TYPE C
207+63, RT TO 207+65, RT	2	TYPE A, MC.100.01
207+71, RT TO 207+86, RT	15	TYPE A, MC.100.01
207+86, RT TO 207+96, RT	10	TRANSITION TYPE A TO TYPE C

10' 0 10' 20'
SCALE: 1"=10'

McCormick Taylor
Engineers & Planners
Since 1946
509 South Exater Street
4th Floor
Baltimore, Maryland 21202
(410) 662-7400

PLAN AND PROFILE - BMP 186 &187

FRANKLIN KNOLLS-PHASE 4

SLIGO (13th) ELECTION DISTRICT

PARCEL X, SUBDIVISION X, LIBER X FOLIO X

MONTGOMERY COUNTY, MARYLAND

CLIENT: MONTGOMERY COUNTY DEPT OF ENVIRONMENTAL PROTECTION
255 ROCKVILLE PIKE, RM. 120
ROCKVILLE, MD 20850-4166
MR. PAUL BOGLE, P.E.
(240) 777-7757

DESIGN	KCS	DATE	JUNE 2014
DRAFT	WJW	SCALE	1"=10'
APPROVED	HJD		

SHEET 47 OF 52

FILE: I:\5192\13 - Roadway LID - Forest Estates and the Four Corners Area\Design\Engineering\PlanSet\FK P4\grd\D-P004_FK4_BMP-186_187.dgn
PLOTTED: Thursday, June 05, 2014 AT 02:47 PM

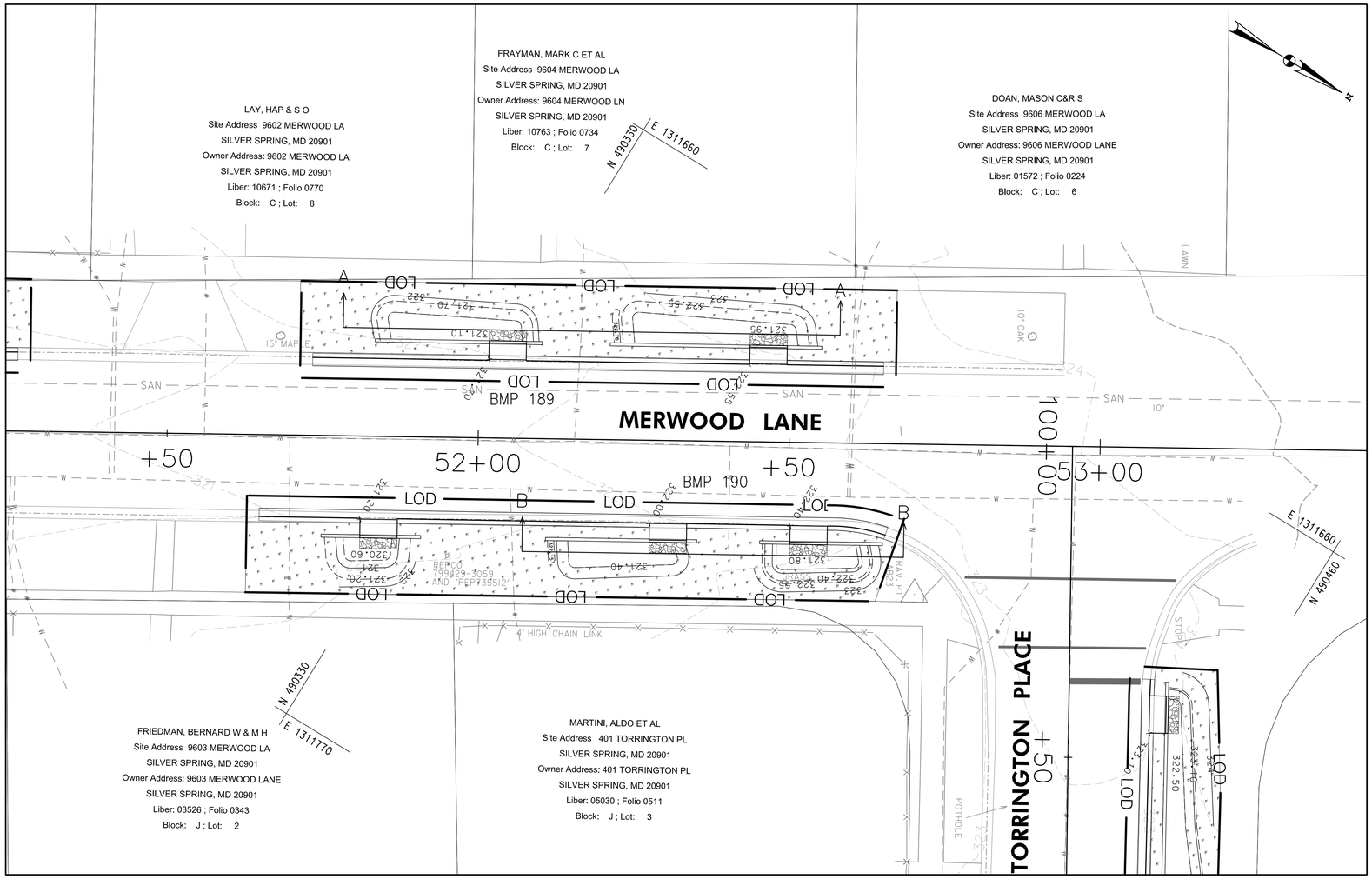

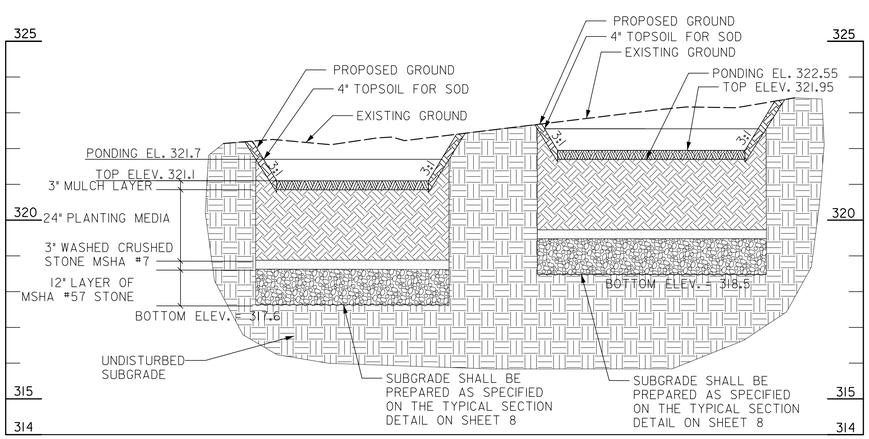

PROFILE (A-A) - RAIN GARDEN FACILITY (BMP 189)

SCALE: HORIZ. 1"=10'
VERT. 1"=2'

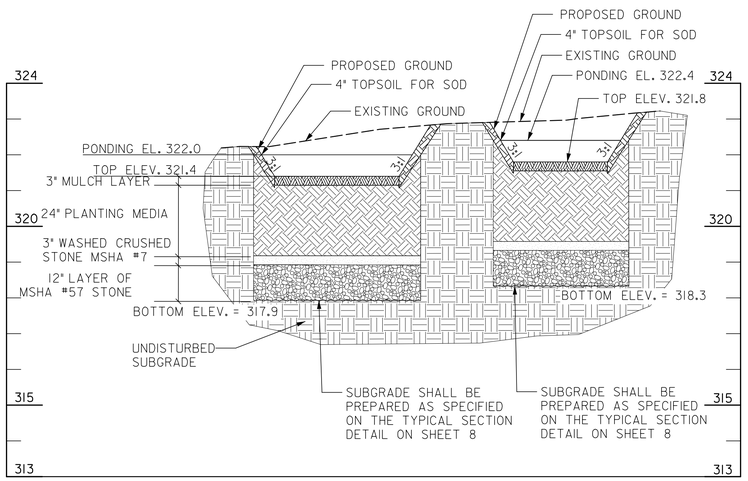

PROFILE (B-B) - RAIN GARDEN FACILITY (BMP 190)

SCALE: HORIZ. 1"=10'
VERT. 1"=2'

AS-BUILT DATA FOR FILTERS (BIORETENTION/RAIN GARDENS)

*TO BE COMPLETED BY THE CERTIFYING ENGINEER

TYPE OF FACILITY: RAIN GARDEN — BMP ID: 189

FEATURE	DESIGN	*AS-BUILT
DRAINAGE AREA (AC)	0.19	
TOTAL IMPERVIOUS AREA (AC)	0.06	
TREATMENT VOLUME PROVIDED (CF)	400	
TARGET WQv TREATMENT VOLUME (CF)	231	
FILTER BED AREA (SF) [1]	190	
FILTER BED SURFACE ELEVATION	321.10, 321.95	
DESIGN POINT/MAX. PONDING ELEVATION	321.70, 322.55	
PONDED WATER SURFACE ELEVATION AREA (SF) [2]	312	
OUTLET PIPE (UNDERDRAIN) SIZE / INVERT ELEV.	N / A	
THICKNESS OF FILTER MEDIA	REFER TO PROFILE	
PLACEMENT OF GEOTEXTILE (SIDES ONLY)	REFER TO FACILITY TYP. SECTION – SHEET 9	
PLANTINGS	REFER TO LANDSCAPE PLAN – SHEET 52	
COMPOSITION OF FILTER MEDIA	REFER TO MCDEP SPECIFICATIONS	

*NOTES:
1. "FILTER BED AREA (SF)" REPRESENTS THE EXPOSED SURFACE AREA AT THE PROPOSED "FILTER BED SURFACE ELEVATION".
2. FOR MATERIAL QUANTITY ESTIMATIONS, THE PLANTING MEDIA, STONE, MULCH, ETC. SHOULD BE BASED ON THE AREA OF "PONDED WATER SURFACE ELEVATION AREA (SF)".
3. CONTRACTOR SHALL TEST PIT UTILITIES PRIOR TO CONSTRUCTION. IF UTILITY IS UNAVOIDABLE, CONTRACTOR SHALL REFER TO SHEET 8 FOR UTILITY CROSSING DETAIL WITHIN THE FACILITY.

AS-BUILT DATA FOR FILTERS (BIORETENTION/RAIN GARDENS)

*TO BE COMPLETED BY THE CERTIFYING ENGINEER

TYPE OF FACILITY: RAIN GARDEN — BMP ID: 190

FEATURE	DESIGN	*AS-BUILT
DRAINAGE AREA (AC)	0.06	
TOTAL IMPERVIOUS AREA (AC)	0.04	
TREATMENT VOLUME PROVIDED (CF)	266	
TARGET WQv TREATMENT VOLUME (CF)	142	
FILTER BED AREA (SF) [1]	119	
FILTER BED SURFACE ELEVATION	321.40, 321.80	
DESIGN POINT/MAX. PONDING ELEVATION	322.00, 322.40	
PONDED WATER SURFACE ELEVATION AREA (SF) [2]	312	
OUTLET PIPE (UNDERDRAIN) SIZE / INVERT ELEV.	N / A	
THICKNESS OF FILTER MEDIA	REFER TO PROFILE	
PLACEMENT OF GEOTEXTILE (SIDES ONLY)	REFER TO FACILITY TYP. SECTION – SHEET 9	
PLANTINGS	REFER TO LANDSCAPE PLAN – SHEET 52	
COMPOSITION OF FILTER MEDIA	REFER TO MCDEP SPECIFICATIONS	

COMBINATION CONC. CURB AND GUTTER

STA. TO STA.	L.F.	REMARKS
51+73, LT TO 51+83, LT	10	TRANSITION TYPE A TO TYPE C
51+83, LT TO 52+02, LT	18	TYPE A, MC.100.01
52+08, LT TO 52+43, LT	36	TYPE A, MC.100.01
52+49, LT TO 52+55, LT	6	TYPE A, MC.100.01
52+55, LT TO 52+65, LT	10	TRANSITION TYPE A TO TYPE C
51+87, RT TO 52+28, RT	41	TYPE A, MC.100.01
52+34, RT TO 52+50, RT	17	TYPE A, MC.100.01
52+56, RT TO 52+66, RT	10	TRANSITION TYPE A TO TYPE C

10' 0 10' 20'
SCALE: 1"=10'

McCormick Taylor
Engineers & Planners Since 1946
509 South Exeter Street
4th Floor
Baltimore, Maryland 21202
(410) 662-7400

PLAN AND PROFILE - BMP 189 & 190

FRANKLIN KNOLLS-PHASE 4

SLIGO (13th) ELECTION DISTRICT

PARCEL X, SUBDIVISION X, LIBER X FOLIO X

MONTGOMERY COUNTY, MARYLAND

CLIENT: MONTGOMERY COUNTY DEPT OF ENVIRONMENTAL PROTECTION
255 ROCKVILLE PIKE, RM. 120
ROCKVILLE, MD 20850-4166
MR. PAUL BOGLE, P.E.
(240) 777-7757

DESIGN	KCS		
DRAFT	WJW		
APPROVED	HJD		
DATE	JUNE 2014		
SCALE	1"=10'		

SHEET 48 OF 52

FILE: I:\31\2013 - Roadway LID – Forest Estates and the Four Corners Area\Design\Engineering\PlanSet\FK Ph4\HD-PR46_FK4_BMP-189_190.dgn
PLOTTED: Thursday, June 05, 2014 AT 02:47 PM

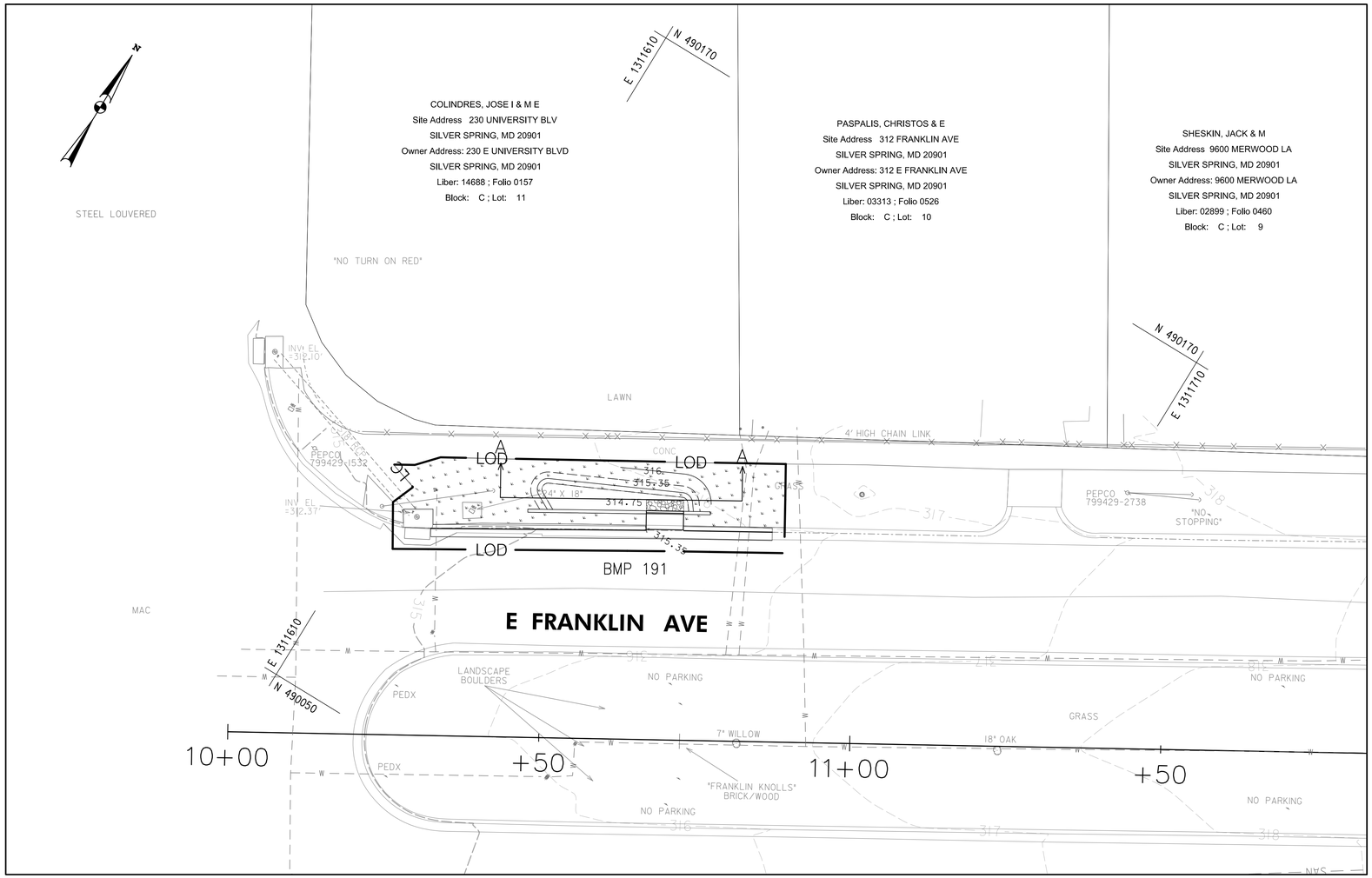

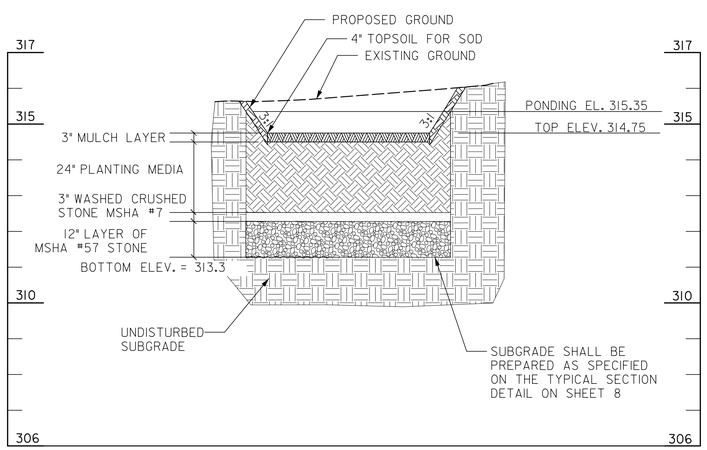

PROFILE (B-B) - RAIN GARDEN FACILITY (BMP 191)

SCALE: HORIZ. 1"=10'
VERT. 1"=2'

AS-BUILT DATA FOR FILTERS (BIORETENTION/RAIN GARDENS)

*TO BE COMPLETED BY THE CERTIFYING ENGINEER

TYPE OF FACILITY: RAIN GARDEN — BMP ID: 191

FEATURE	DESIGN	*AS-BUILT
DRAINAGE AREA (AC)	1.38	
TOTAL IMPERVIOUS AREA (AC)	0.49	
TREATMENT VOLUME PROVIDED (CF)	167	
TARGET WQv TREATMENT VOLUME (CF)	1851	
FILTER BED AREA (SF) [1]	73	
FILTER BED SURFACE ELEVATION	314.75	
DESIGN POINT/MAX. PONDING ELEVATION	315.35	
PONDED WATER SURFACE ELEVATION AREA (SF) [2]	132	
OUTLET PIPE (UNDERDRAIN) SIZE / INVERT ELEV.	N / A	
THICKNESS OF FILTER MEDIA	REFER TO PROFILE	
PLACEMENT OF GEOTEXTILE (SIDES ONLY)	REFER TO FACILITY TYP. SECTION – SHEET 9	
PLANTINGS	REFER TO LANDSCAPE PLAN – SHEET 52	
COMPOSITION OF FILTER MEDIA	REFER TO MCDEP SPECIFICATIONS	

*NOTES:
1. "FILTER BED AREA (SF)" REPRESENTS THE EXPOSED SURFACE AREA AT THE PROPOSED "FILTER BED SURFACE ELEVATION".
2. FOR MATERIAL QUANTITY ESTIMATIONS, THE PLANTING MEDIA, STONE, MULCH, ETC. SHOULD BE BASED ON THE AREA OF "PONDED WATER SURFACE ELEVATION AREA (SF)".
3. CONTRACTOR SHALL TEST PIT UTILITIES PRIOR TO CONSTRUCTION. IF UTILITY IS UNAVOIDABLE, CONTRACTOR SHALL REFER TO SHEET 8 FOR UTILITY CROSSING DETAIL WITHIN THE FACILITY.

COMBINATION CONC. CURB AND GUTTER

STA. TO STA.	L.F.	REMARKS
10+32, LT TO 10+67, LT	35	TYPE A, MC.100.01
10+73, LT TO 10+77, LT	4	TYPE A, MC.100.01
10+77, LT TO 10+87, LT	10	TRANSITION TYPE A TO TYPE C

10' 0 10' 20'
SCALE: 1"=10'

McCormick Taylor
Engineers & Planners Since 1946
509 South Exeter Street
4th Floor
Baltimore, Maryland 21202
(410) 662-7400

PLAN AND PROFILE - BMP 191
FRANKLIN KNOLLS-PHASE 4
SLIGO (13th) ELECTION DISTRICT
PARCEL X, SUBDIVISION X, LIBER X FOLIO X
MONTGOMERY COUNTY, MARYLAND

CLIENT: MONTGOMERY COUNTY DEPT OF ENVIRONMENTAL PROTECTION
255 ROCKVILLE PIKE, RM. 120
ROCKVILLE, MD 20850-4166
MR. PAUL BOGLE, P.E.
(240) 777-7757

DESIGN	KCS
DRAFT	WJW
APPROVED	HJD
DATE	JUNE 2014
SCALE	1"=10'

SHEET 49 OF 52

FILE: I:\5182\13 - Roadway LID - Forest Estates and the Four Corners Area\Design\Engineering\PlanSet\FK P4\pl\D-P047_FK4_BMP-191.dgn
PLOTTED: Thursday, June 05, 2014 AT 02:47 PM

MONTGOMERY COUNTY GOVERNMENT
STANDARD EROSION AND SEDIMENT CONTROL NOTES (REV. August 2008)

1. The permittee shall notify the Department of Permitting Services (DPS) forty–eight (48) hours before commencing any land disturbing activity and, unless waived by the Department, shall be required to hold a pre–construction meeting between them or their representative, their engineer and an authorized representative of the Department.

2. The permittee must obtain inspection and approval by DPS at the following points:
A. At the required pre–construction meeting.
B. Following installation of sediment control measures and prior to any other land disturbing activity.
C. During the installation of a sediment basin or stormwater management structure at the required inspection points (see Inspection Checklist on plan). Notification prior to commencing construction is mandatory.
D. Prior to removal or modification of any sediment control structure(s).
E. Prior to final acceptance.

3. The permittee shall construct all erosion and sediment control measures per the approved plan and construction sequence, shall have them inspected and approved by the Department prior to beginning any other land disturbances, shall ensure that all runoff from disturbed areas is directed to the sediment control devices, and shall not remove any erosion or sediment control measure without prior permission from the Department.

4. The permittee shall protect all points of construction ingress and egress to prevent the deposition of materials onto traversed public thoroughfare(s). All materials deposited onto public thoroughfare(s) shall be removed immediately.

5. The permittee shall inspect periodically and maintain continuously in effective operating condition, all erosion and sediment control measures until such time as they are removed with prior permission from the Department. The permittee is responsible for immediately repairing or replacing any sediment control measures which have been damaged or removed by the permittee or any other person.

6. Following initial soil disturbance or re–disturbance, permanent or temporary stabilization must be completed within:
a) Three (3) calendar days as to the surface of all perimeter dikes, swales, ditches, perimeter slopes and all slopes steeper than 3 horizontal to 1 vertical (3:1); and
b) Seven (7) calendar days as to all other disturbed or graded areas on the project site not under active grading.All areas disturbed outside of the perimeter sediment control system must be minimized and stabilized immediately. Maintenance must be performed as necessary to ensure continued stabilization.

7.The permittee shall apply sod, seed, and anchored straw mulch, or other approved stabilization measures to all disturbed areas within seven (7) calendar days after stripping and grading activities have ceased on that area. Maintenance shall be performed as necessary to ensure continued stabilization. Active construction areas such as borrow or stockpile areas, roadway improvements, and areas within fifty (50) feet of a building under construction may be exempt from this requirement, provided that erosion and sediment control measures are installed and maintained to protect those areas.

8. Prior to removal of sediment control measures, the permittee shall stabilize all contributory disturbed areas with required soil amendments and topsoil, using sod or an approved permanent seed mixture and an approved anchored mulch. Wood fiber mulch may only be used in seeding season when the slope does not exceed 10% and grading has been done to promote sheet flow drainage. Areas brought to finished grade during the seeding season shall be permanently stabilized within seven (7) calendar days of establishment. When property is brought to finished grade during the months of November through February, and permanent stabilization is found to be impractical, an approved temporary seed and straw anchored mulch shall be applied to disturbed areas. The final permanent stabilization of such property shall be completed prior to the following April 15.

9. The site permit, work, materials, approved SC/SM plans, and test reports shall be available at the site for inspection by duly authorized officials of Montgomery County.

10. Surface drainage flows over unstabilized cut and fill slopes shall be controlled by either preventing drainage flows from traversing the slopes or by installing mechanical devices to lower the water down slope without causing erosion. Dikes shall be installed and maintained at the top of cut or fill slopes until the slope and drainage area to it are fully stabilized, at which time they must be removed and final grading done to promote sheet flow drainage. Mechanical devices must be provided at points of concentrated flow where erosion is likely to occur.

11. Permanent swales or other points of concentrated water flow shall be stabilized within 3 calendar days of establishment with sod or seed with an approved erosion control matting or by other approved stabilization measures.

12. Sediment control devices shall be removed, with permission of the Department, within thirty (30) calendar days following establishment of permanent stabilization in all contributory drainage areas. Stormwater management structures used temporarily for sediment control shall be converted to the permanent configuration within this time period as well.

13. No permanent cut or fill slope with a gradient steeper than 3:1 will be permitted in lawn maintenance areas or on residential lots. A slope gradient of up to 2:1 will be permitted in non– maintenance areas provided that those areas are indicated on the erosion and sediment control plan with a low–maintenance ground cover specified for permanent stabilization. Slope gradient steeper than 2:1 will not be permitted with vegetative stabilization.

14. The permittee shall install a splashblock at the bottom of each downspout unless the downspout is connected by a drain line to an acceptable outlet.

15. For finished grading, the permittee shall provide adequate gradients so as to prevent water from standing on the surface of lawns more than twenty–four (24) hours after the end of a rainfall, except in designated drainage courses and swale flow areas, which may drain as long as forty–eight (48) hours after the end of a rainfall.

16. Sediment traps or basins are not permitted within 20 feet of a building which is existing or under construction. No building may be constructed within 20 feet of a sediment trap or basin.

17. All inlets in non–sump areas shall have asphalt berms installed at the time of base paving establishment.

18.The sediment control inspector has the option of requiring additional sediment control measures, as deemed necessary.

19. All trap elevations are relative to the outlet elevation, which must be on existing undisturbed ground.

20.Vegetative stabilization shall be performed in accordance with the Standards and Specifications for Soil Erosion and Sediment Control.

21.Sediment trap(s)/basin(s) shall be cleaned out and restored to the original dimensions when sediment has accumulated to the point of one–half (1/2) the wet storage depth of the trap/basin (1/4 the wet storage depth for ST–III) or when required by the sediment control inspector.

22.Sediment removed from traps/basins shall be placed and stabilized in approved areas, but not within a floodplain.

23. All sediment basins and traps must be surrounded with a welded wire safety fence. The fence must be at least 42 inches high, have posts spaced no farther apart than 8 feet, have mesh openings no greater the two inches in width and four inches in height, with a minimum of 14 gauge wire. Safety fence must be maintained in good condition at all times.

24. No excavation in the areas of existing utilities is permitted unless their location has been determined. Call "Miss Utility" at 1–800–257–7777, 48 hours prior to the start of work.

25.Off–site spoil or borrow areas must have prior approval by DPS.

26.Sediment trap/basin dewatering for cleanout or repair may only be done with the DPS inspector's permission. The inspector must approve the dewatering method for each application. The following methods may be considered:

A. Pump discharge may be directed to another on–site sediment trap or basin, provided it is of sufficient volume and the pump intake is floated to prevent agitation or suction of deposited sediments; or

B. The pump intake may utilize a Removable Pumping Station and must discharge into an undisturbed area through a non–erosive outlet; or

C. The pump intake may be floated and discharge into a Dirt Bag (12 oz. non–woven fabric), or approved equivalent, located in an undisturbed buffer area.

Remember: Dewatering operation and method must have prior approval by the DPS inspector.

27. The permittee must notify the Department of all utility construction activities within the permitted limits of disturbance prior to the commencement of those activities.

28. Topsoil must be applied to all pervious areas within the limits of disturbance prior to permanent stabilization in accordance with MDE *Standards and Specifications for Soil Preparation, Topsoiling, and Soil Amendments*.

TEMPORARY SEEDING SPECIFICATIONS

1. TEMPORARY SEEDING: SHALL BE DONE BETWEEN MARCH 1 – MAY 15 AND AUGUST 15 – OCTOBER 15. ALL OTHER DISTURBED AREAS REQUIRING STABILIZATION NOT WITHIN THE SEEDING DATES SHALL BE MULCHED.

2. ALL TEMPORARY SEEDED AREAS SHALL BE MULCHED IMMEDIATELY AFTER SEEDING. MULCH MATERIALS SHOULD BE UNWEATHERED, UNCHOPPED, SMALL GRAIN STRAW SPREAD AT A RATE OF 2 TONS PER ACRE. THE MULCH SHALL BE ANCHORED IMMEDIATELY AFTER PLACEMENT WITH ASPHALT, PEG AND TWINE, PLASTIC NETTINGS OR BY A MULCH ANCHORING TOOL.

3. LIME AND FERTILIZER SHALL BE REQUIRED FOR TEMPORARY SEEDING IN ACCORDANCE WITH THE FOLLOWING PROCEDURES:
   1. PULVERIZED DOLOMITIC LIMESTONE IS TO BE APPLIED AT THE RATE OF 100 LBS. PER 1,000 SQ. FT.
   2. FERTILIZER SHALL BE 10–10–10 OR EQUIVALENT AND APPLIED AT THE RATE OF 15 LBS. PER 1,000 SQ. FT.

PERMANENT SEEDING AND SODDING SPECIFICATIONS

1. ALL DISTURBED AREAS SHALL BE SEEDED AND MULCHED.

2. SOIL PREPARATION: WEEDS AND UNDESIRABLE GRASSES GROWING ON EXISTING GRADE THAT IS TO BE SEEDED AND/OR SODDED MUST BE CUT AND REMOVED BEFORE SOIL PREPARATION BEGINS. BEFORE SEEDING OR SODDING ALL SOILS SHALL BE LOOSENED BY MEANS OF FILLING AND/OR DISCING. ALL TRASH, DEBRIS, ROOTS, BRUSH, WIRE, ROCKS, STONE AND OTHER FOREIGN DEBRIS OVER ONE INCH IN DIAMETER SHALL BE REMOVED PRIOR TO SEEDING AND/OR SODDING, TO A DEPTH OF FOUR (4) INCHES.

3. TOPSOIL: THE MINIMUM ORGANIC CONTENT IN THE MSHA SPECIFICATION REFERENCED SHALL BE INCREASED TO 10%. ORGANIC MATTER SHALL BE ADDED USING COMPOST MATERIAL MEETING THE STANDARD REQUIREMENTS IN THE SPECS.

4. SEEDED PREPARATION: THE TOP LAYER OF SOIL SHALL BE LOOSENED BY DISCLING OR RAKING (SHALL BE DONE ON CONTOUR) AT A DEPTH OF AT LEAST 3", BEFORE SEEDING OCCURS. APPLY 100LBS PER 1,000 SQ.FT. OF LIME AND 15 LB. PER 1,000 SQ.FT. OF 10–10–10 FERTILIZER OR EQUIVALENT. THOROUGHLY MIX INTO SOIL TO A MINIMUM OF 3".

5. SEEDING: USE 40% KENTUCKY BLUEGRASS, 10% ANNUAL RYE AND 25% RED FESCUE AT THE RATE OF 250 LB. PER ACRE.

6. MULCHING: USE CLEAN, UNWEATHERED, UNCHOPPING SMALL GRAIN STRAW AT THE RATE OF 1.5 TO 2 TONS PER ACRE ANCHORED DOWN WITH CUTBACK ASPHALT AT THE RATE OF 5–8 GALLONS PER 1000 SQ. FT.

7. DISCING AND HARROWING SHALL BE DONE ON CONTOUR.

8. SOD SHALL BE STATE APPROVED SOD INSPECTED AND APPROVED BY MD. DEPT. OF AGRICULTURE. ALL SOD SHALL BE LAID ON SITE NO MORE THAN 36 HOURS AFTER HARVEST, AND SHALL BE A MIXTURE OF 60% (MIN.) TALL FESCUE AND 40% (MIN.) KENTUCKY BLUEGRASS.

9. SOD PEGS OR STAKES BE UNTREATED WOOD PEGS DRIVEN THROUGH, AND FLUSH WITH SOD. ALL SLOPES WITH A GRADE 3 TO 1 OR STEEPER SHALL BE PEGGED AT A MINIMUM OF 4 PEGS PER SQUARE YARD OF SOD.

10.SODDING, SEEDING AND MULCHING MAY BE DONE IMMEDIATELY AFTER FINAL GRADING, PROVIDED THAT THE BED HAS REMAINED IN GOOD, FRIABLE CONDITION AND HAS NOT BECOME MUDDY OR HARD. IF IT HAS BECOME HARD, IT SHALL BE FILLED TO FRIABLE CONDITION AGAIN.

11.SEED SHALL BE WORKED INTO THE TOP 3" OF SOIL BY MEANS OF RAKING, WIRE DRAG OR OTHER APPROVED EQUIPMENT. DURING PERIODS OF HIGH TEMPERATURE AND/OR DROUGHT. THE SOIL SHALL BE WATERED IMMEDIATELY PRIOR TO LAYING THE SOD. ALL SOD SHALL BE LAID AT RIGHT ANGLES TO SLOPES. NO SOD SHALL BE APPLIED TO FROZEN GROUND AND NO FROZEN SOD IS TO BE LAID. WATERING SHALL COMMENCE IMMEDIATELY DURING OR AFTER THE LAYING OPERATION, AND SHALL BE SUFFICIENT TO THOROUGHLY WET THE SOD ROOTS AND THE SOIL BELOW.

12.PERMANENT SEEDING: SHALL BE DONE MARCH 1 – MAY 15 AND AUGUST 15 – OCTOBER 15. IRRIGATION FOR PERMANENT SEEDING SHALL BE DONE BETWEEN MAY 15 AND AUGUST 14.

13.SEDIMENT CONTROL DEVICES (DITCHES, DIKES, TRAPS, ETC.) ARE TO REMAIN IN PLACE UNTIL CONTRIBUTING WATERSHED HAS BEEN STABILIZED. MAINTENANCE TO SEDIMENT CONTROL DEVICES DURING THE UNDER GOING GRADING, CONSTRUCTION AND DEVELOPMENT SHOULD BE DONE AS NECESSARY. REMOVAL OF THESE DEVICES SHALL BE WITH THE APPROVAL OF THE MONTGOMERY COUNTY SEDIMENT CONTROL INSPECTOR.

STANDARDS AND SPECIFICATIONS FOR TOPSOIL

DEFINITION
PLACEMENT OF TOPSOIL OVER A PREPARED SUBSOIL PRIOR TO ESTABLISHMENT OF PERMANENT VEGETATION.

PURPOSE
TO PROVIDE A SUITABLE SOIL MEDIUM FOR VEGETATIVE GROWTH. SOILS OF CONCERN HAVE LOW MOISTURE CONTENT, LOW NUTRIENT LEVELS, LOW PH, MATERIALS TOXIC TO PLANTS, AND/OR UNACCEPTABLE SOIL GRADATION.

CONDITIONS WHERE PRACTICE APPLIES
THIS PRACTICE IS LIMITED TO AREAS HAVING 2:1 OR FLATTER SLOPES.

FOR THE PURPOSE OF THESE STANDARDS AND SPECIFICATIONS, AREAS HAVING SLOPES STEEPER THAN 2:1 REQUIRE SPECIAL CONSIDERATION AND DESIGN FOR ADEQUATE STABILIZATION. AREAS HAVING SLOPES STEEPER THAN 2:1 SHALL HAVE THE APPROPRIATE STABILIZATION SHOWN ON THE PLANS.

CONSTRUCTION AND MATERIAL SPECIFICATIONS
TOPSOIL SALVAGED FROM THE EXISTING SITE MAY BE USED PROVIDED THAT IT MEETS THE STANDARDS AS SET FORTH IN THESE SPECIFICATIONS.

TOPSOIL SPECIFICATIONS – SOIL TO BE USED AS TOPSOIL MUST MEET THE FOLLOWING:

1. TOPSOIL SHALL BE A LOAM, SANDY LOAM, CLAY LOAM, SILT LOAM, SANDY CLAY LOAM, LOAMY SAND. OTHER SOILS MAY BE USED IF RECOMMENDED BY AN AGRONOMIST OR SOIL SCIENTIST AND APPROVED BY DPS. REGARDLESS, TOPSOIL SHALL NOT BE A MIXTURE OF CONTRASTING TEXTURED SUBSOILS, AND SHALL CONTAIN LESS THAN 1 % BY VOLUME OF CINDERS, STONES, SLAG, COARSE FRAGMENTS, GRAVEL, STICKS, ROOTS, TRASH, OR OTHER MATERIALS LARGER THAN 1 1/2 " IN DIAMETER.
THE SUBSOIL SHALL BE TILLED TO A MINIMUM DEPTH OF 6 INCHES BEFORE PLACEMENT OF TOPSOIL.

CONSTRUCTION AND MATERIAL SPECIFICATIONS
WHERE THE SUBSOIL IS EITHER HIGHLY ACIDIC OR COMPOSED OF HEAVY CLAYS, GROUND LIMESTONE SHALL BE SPREAD AT THE RATE OF 4–8 TONS/ACRE (200–400 LBS PER 1000 SQ FT) PRIOR TO THE PLACEMENT OF TOPSOIL. LIME SHALL BE DISTRIBUTED UNIFORMLY OVER DESIGNATED AREAS AND WORKED INTO THE SOIL.

TOPSOIL SHALL BE TESTED AND AMENDED AS PER SOIL TEST RECOMMENDATIONS.

TOPSOIL APPLICATION.

1. WHEN TOPSOILING, MAINTAIN NEEDED EROSION AND SEDIMENT CONTROL PRACTICES.
2. TOPSOIL SHALL BE UNIFORMLY DISTRIBUTED IN A 4–8 INCH LAYER AND LIGHTLY COMPACTED TO A MINIMUM THICKNESS OF 4 INCHES. ANY IRREGULARITIES IN THE SURFACE RESULTING FROM TOPSOILING OR OTHER OPERATIONS SHALL BE CORRECTED IN ORDER TO PREVENT THE FORMATION OF DEPRESSIONS OR WATER POCKETS.
3. TOPSOIL SHALL NOT BE PLACED WHILE THE TOPSOIL IS IN A FROZEN OR MUDDY CONDITION, WHEN THE SUBSOIL IS EXCESSIVELY WET OR IN A CONDITION THAT MAY OTHERWISE BE DETRIMENTAL TO PROPER GRADING AND SEEDBED PREPARATION.

EARTH FILL FOR FACILITY EMBANKMENTS

MATERIAL
THE FILL MATERIAL SHALL BE TAKEN FROM APPROVED DESIGNATED BORROW AREAS. IT SHALL BE FREE OF ROOTS, STUMPS, WOOD, RUBBISH, STONES GREATER THAN SIX INCHES, FROZEN OR OTHER OBJECTIONABLE MATERIALS. CONSIDERATION MAY BE GIVEN TO THE USE OF OTHER MATERIALS IN THE EMBANKMENT IF DESIGN AND CONSTRUCTION ARE SUPERVISED BY A GEOTECHNICAL ENGINEER AND APPROVED BY MCDPS.

PLACEMENT
AREAS ON WHICH FILL IS TO BE PLACED SHALL BE SCARIFIED PRIOR TO PLACEMENT OF FILL. FILL MATERIALS SHALL BE PLACED IN MAXIMUM EIGHT INCH HEIGHT (BEFORE COMPACTION) LAYERS, WHICH ARE TO BE CONTINUOUS OVER THE ENTIRE LENGTH OF THE FILL. THE MOST PERMEABLE BORROW MATERIAL SHALL BE PLACED IN THE DOWNSTREAM PORTIONS OF THE EMBANKMENT. PIPES OR UNDERDRAINS MUST BE INSTALLED CONCURRENT WITH EMBANKMENT CONSTRUCTION TO AVOID EXCAVATION INTO THE COMPLETED EMBANKMENT AT A LATER TIME.

COMPACTION
THE MOVEMENT OF THE HAULING AND SPREADING EQUIPMENT OVER THE FILL SHALL BE CONTROLLED SO THAT THE ENTIRE SURFACE OF EACH LIFT SHALL BE TRAVERSED BY NOT LESS THAN ONE TREAD TRACK OF THE EQUIPMENT OR COMPACTION SHALL BE ACHIEVED BY A MIN. OF FOUR COMPLETE PASSES OF A SHEEPSFOOT, RUBBER TIRED OR VIBRATORY ROLLER. FILL MATERIAL SHALL CONTAIN SUFFICIENT MOISTURE SUCH THAT THE REQUIRED DEGREE OF COMPACTION WILL BE OBTAINED WITH THE EQUIPMENT USED. THE FILL MATERIAL SHALL CONTAIN SUFFICIENT MOISTURE SO THAT IF FORMED INTO A BALL IT WILL NOT CRUMBLE, YET NOT SO WET THAT WATER CAN BE SQUEEZED OUT.

THE DENSITY OF EACH LIFT SHALL NOT BE LESS THAN 95% OF MAX. DRY DENSITY WITH A MOISTURE CONTENT WITHIN $\pm 2\%$ OF THE OPTIMUM. EACH LAYER OF FILL SHALL BE COMPACTED AS NECESSARY TO OBTAIN THAT DENSITY, AND IS TO BE CERTIFIED BY THE ENGINEER AT THE TIME OF CONSTRUCTION. ALL COMPACTION IS TO BE DETERMINED BY AASHTO METHOD T–99 (STANDARD PROCTOR).

McCormick Taylor
Engineers & Planners
Since 1946
509 South Exeter Street
4th Floor
Baltimore, Maryland 21202
(410) 662–7400

EROSION AND SEDIMENT CONTROL NOTES
FRANKLIN KNOLLS-PHASE 4
SLIGO (13th) ELECTION DISTRICT
PARCEL X, SUBDIVISION X, LIBER X FOLIO X
MONTGOMERY COUNTY, MARYLAND

CLIENT: MONTGOMERY COUNTY DEPT OF ENVIRONMENTAL PROTECTION
255 ROCKVILLE PIKE, RM. 120
ROCKVILLE, MD 20850-4166
MR. PAUL BOGLE, P.E.
(240) 777-7757

DESIGN	KCS
DRAFT	WJW
APPROVED	HJD
DATE	JUNE 2014
SCALE	

FILE: I:\5182\13 - Roadway LID – Forest Estates and the Four Corners Area\Design\Engineering\PlanSet\FK P4\pES-N001_FK4.dgn
PLOTTED: Thursday, June 05, 2014 AT 02:47 PM

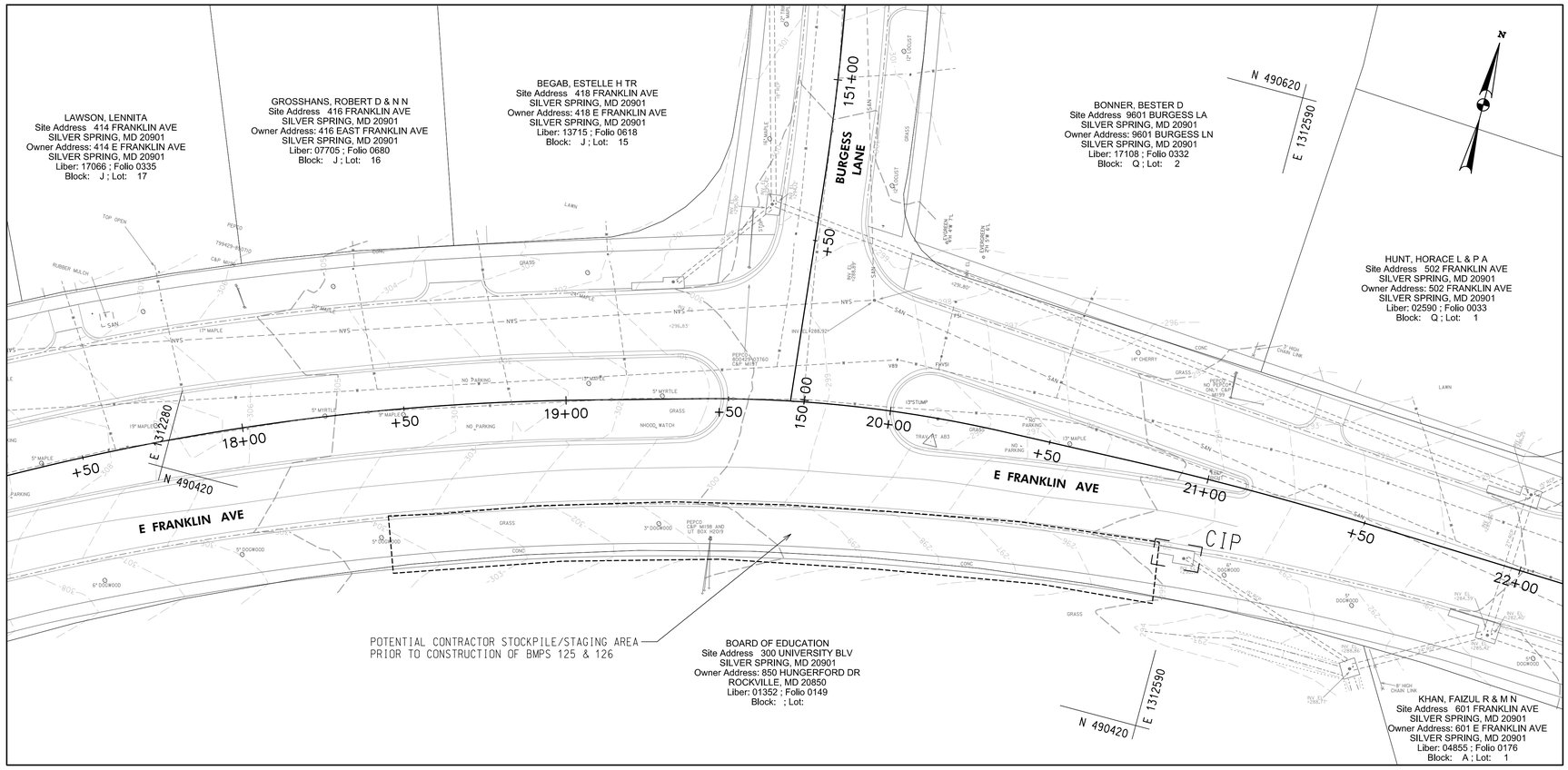

SEQUENCE OF CONSTRUCTION

1. PRIOR TO CLEARING OF TREES, INSTALLING SEDIMENT CONTROL MEASURES, OR GRADING, A PRECONSTRUCTION MEETING MUST BE CONDUCTED ON–SITE WITH THE MONTGOMERY COUNTY DEPARTMENT OF PERMITTING SERVICES (MCDPS) SEDIMENT CONTROL INSPECTOR (240) 777–6300 (48 HOURS NOTICE), THE MCDPS RIGHT OF WAY INSPECTOR (301) 370–3686 (48 HOURS NOTICE), THE OWNER'S REPRESENTATIVE, THE CONTRACTOR AND THE SITE ENGINEER.

2. THE CONTRACTOR SHALL COMPLY WITH MCDOT'S WORK ZONE TEMPORARY TRAFFIC CONTROL STANDARDS AND MSHA STANDARDS NO. 104.02–10 AND NO. 104.02–14.

3. THE LIMITS OF DISTURBANCE MUST BE FIELD MARKED PRIOR TO CLEARING OF TREES, INSTALLATION OF SEDIMENT CONTROL MEASURES, CONSTRUCTION, OR OTHER LAND DISTURBING ACTIVITIES.

4. CLEAR AND GRADE FOR INSTALLATION OF SEDIMENT CONTROL DEVICES, ONLY DISTURBING THE AREA NEEDED FOR INSTALLATION OF THE SEDIMENT CONTROL DEVICES.

5. INSTALL SEDIMENT CONTROL DEVICES INCLUDING INLET PROTECTION, SILT FENCE AND TREE PROTECTION FENCING. TREE PROTECTION AREAS ARE SHOWN ON THE PLAN AND PROFILE SHEETS, IF REQUIRED. IMMEDIATELY STABILIZE ANY DISTURBANCE CAUSED BY THIS.

6. ONCE THE SEDIMENT CONTROL DEVICES ARE INSTALLED, THE PERMITTEE MUST OBTAIN WRITTEN APPROVAL FROM THE MCDPS INSPECTOR BEFORE PROCEEDING WITH ANY ADDITIONAL CLEARING, GRUBBING OR GRADING.

7. DISTURBED AREAS WITHIN THE PROJECT LIMITS SHALL HAVE EITHER PERMANENT OR TEMPORARY STABILIZATION AT THE END OF EACH WORK DAY.

8. CONTRACTOR MAY COMPLETE WORK IN EACH LOD AREA CONCURRENTLY AS LONG AS THE LOD IS STAKED OUT AND ALL SEDIMENT CONTROLS ARE IN PLACE. THE CONTRACTOR SHALL NOT EXCEED A MAXIMUM OF 5,000 SF OF DISTURBANCE AT ANY ONE TIME PER MCDEP'S SMALL LAND DISTURBANCE PERMIT FOR ROADSIDE LID RETROFITS.

9. THE CONTRACTOR SHALL UTILIZE THE DESIGNATED STOCKPILE/STAGING AREA ALONG EAST FRANKLIN AVENUE. ANY ADDITIONAL STOCKPILE/STAGING AREA REQUIRES APPROVAL BY THE MCDPS SEDIMENT INSPECTOR PRIOR TO USE.

10. STOCKPILE/STAGING AREAS ARE TO BE REMOVED AND RESTORED TO ORIGINIAL CONDITION UPON COMPLETION OF WORK. STOCKPILE/STAGING AREAS ARE NOT TO BE CONSIDERED PART OF THE LIMITS OF DISTURBANCE AND NOT COUNTED AGAINST THE MAXIMUM 5,000 SF DISTURBED AREA REQUIREMENT OF THE PERMIT.

11. CONSTRUCTION OF EACH BMP FACILITY WILL FOLLOW A BASIC SEQUENCE OUTLINED BELOW:

a. THE LOD SHALL BE FIELD MARKED PRIOR TO INSTALLATION OF ANY SEDIMENT CONTROL MEASURES OR ANY OTHER LAND DISTURBING ACTIVITIES.

b. INSTALL SILT FENCE (SF) OR SUPER SILT FENCE (SSF) FOR STEEP SLOPES, ALONG THE SIDEWALK AND DOWNSTREAM DRIVEWAY ENTRANCES. INLET PROTECTION (IP) SHALL BE INSTALLED AT THE CLOSEST DOWNSTREAM INLET.

c. THE PERMITTEE MUST OBTAIN WRITTEN APPROVAL FROM THE MCDPS SEDIMENT CONTROL INSPECTOR BEFORE PROCEEDING WITH CONSTRUCTION.

d. CONSTRUCT THE FACILITY PER THE PLANS AND DETAILS. CURB INLETS TO THE FACILITY SHALL BE BLOCKED WITH SAND BAGS UNTIL THE FACILITY IS STABILIZED AND IS READY TO BE BROUGHT ON LINE. STABILIZE ALL AREAS PRIOR TO PLACEMENT OF THE FILTER MEDIA.

e. THE CONTRACTOR SHALL TAKE EXTREME CAUTION TO NOT ALLOW DISTURBED AREAS TO DRAIN INTO THE FACILITY. ALL DISTURBED AREAS SHALL BE STABILIZED AT THE END OF EACH WORK DAY.

f. FINAL GRADE FACILITY AND PERMANENTLY STABILIZE ALL DISTURBED AREAS AS SHOWN ON THE LANDSCAPE PLANS AND/OR TYPICAL SECTIONS.

h. THE CONTRACTOR MUST OBTAIN WRITTEN APPROVAL FROM MCDPS SEDIMENT INPSECTOR PRIOR TO THE REMOVAL OF ANY SEDIMENT CONTROL DEVICE, THAT THE AREA IS ADEQUATELY STABILIZED AND CAN BE REMOVED FROM THE TOTAL 5,000 SF DISTURBED AREA TABULATION.

i. ANY AREAS DISTURBED DURING THE REMOVAL OF E&S CONTROLS SHALL BE IMMEDIATELY STABILIZED.

20' 0 20' 40'
SCALE: 1"=20'

McCormick Taylor
Engineers & Planners
Since 1946
509 South Exeter Street
4th Floor
Baltimore, Maryland 21202
(410) 662–7400

EROSION AND SEDIMENT CONTROL PLAN
FRANKLIN KNOLLS-PHASE 4
SLIGO (13th) ELECTION DISTRICT
PARCEL X, SUBDIVISION X, LIBER X FOLIO X
MONTGOMERY COUNTY, MARYLAND

CLIENT: MONTGOMERY COUNTY DEPT OF ENVIRONMENTAL PROTECTION
255 ROCKVILLE PIKE, RM. 120
ROCKVILLE, MD 20850-4166
MR. PAUL BOGLE, P.E.
(240) 777-7757

DESIGN	KCS
DRAFT	WJW
APPROVED	HJD
DATE	JUNE 2014
SCALE	

SHEET 51 OF 52

FILE: I:\5192\13 - Roadway LID - Forest Estates and the Four Corners Area\Design\Engineering\PlanSet\FK Ph4\ES-P001_FK4.dgn
PLOTTED: Thursday, June 05, 2014 AT 02:47 PM

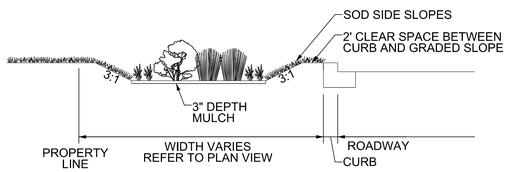

PLANTING TYPICAL SECTION

NOT TO SCALE

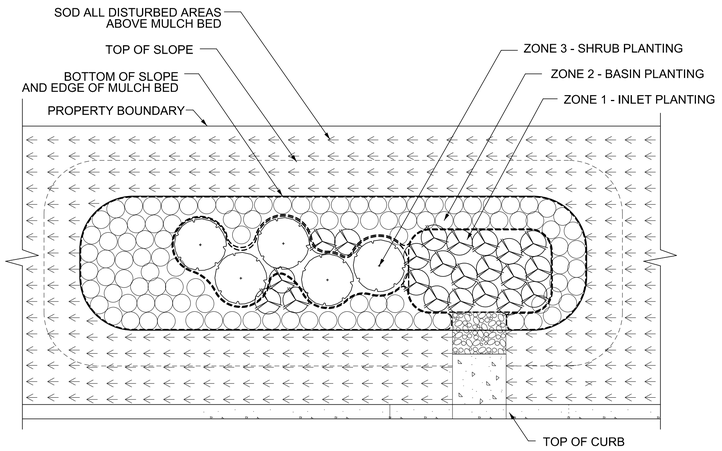

BMP PLANTING TYPICAL PLAN VIEW

NOT TO SCALE

LEGEND

- ZONE 1 - INLET PLANTINGS ORNAMENTAL GRASS - PLANT 18" ON CENTER
- ZONE 2 - BASIN PLANTINGS PERENNIAL - PLANT 18" ON CENTER
- ZONE 3 - SHRUB PLANTINGS SHRUB - PLANT 3' ON CENTER

CONCEPTUAL ZONE SCHEDULE

ZONE 1	15% BMP AREA
ZONE 2	60% BMP AREA
ZONE 3	25% BMP AREA

NOTES:

1. This plan is for landscape purposes only.
2. All proposed layouts are conceptual.
3. Cluster species in groupings.
4. When no Zone 3 plantings are specified, distribute Zone 2 plantings evenly over Zone 2 and Zone 3.

PLANT SCHEDULE

BMP		121	122	123	124	125	126A	126B	126C	127	128	129	132	134	135	136	138	139	141	142	143	144A	144B	145	146	149	150	151	152	153	154	155	156	157	158	159	160	161	162	164	165	169	170	171	172	173	175	176	177A/B	178	179	180	181	182	184	185	186	187	188	189	190	191	Total
Groundcovers	Turfgrass Sod (SY)	36	39	78	66	82	53	40	58	51	47	85	95	76	57	43	46	49	68	51	45	46	39	41	50	53	101	57	36	43	45	45	34	57	49	47	13	80	59	35	34	40	34	69	43	43	50	64	96	73	70	62	54	52	100	39	40	35	54	95	69	58	3369
	Shredded Hardwood Bark Mulch (SY)	3	4	16	13	14	8	10	11	5	8	22	18	5	17	9	6	4	3	5	7	7	3	3	6	7	30	13	4	8	4	5	4	8	6	2	0	8	6	2	2	11	5	8	10	4	12	13	11	14	9	10	11	7	11	4	7	3	11	21	13	8	519
Zone 1 Inlet Plantings (15% SF BMP)	Chasmanthium latifolium/ River Oats	0	0	0	0	0	0	0	0	0	0	13	11	0	0	0	0	0	0	0	0	0	0	0	0	0	0	0	0	0	0	0	0	5	3	3	0	0	0	0	0	0	0	5	6	0	7	8	0	0	5	0	0	0	0	0	0	3	0	0	0	0	69
	Juncus effusus/ Common Rush	3	0	0	8	8	5	6	7	3	0	0	0	0	10	5	0	0	3	3	4	4	3	0	3	6	0	0	3	5	0	3	3	0	0	0	0	0	0	0	0	0	0	0	0	0	0	0	7	0	0	6	0	4	7	3	4	0	6	0	0	5	137
	Panicum virgatum 'Shenandoah'/ Shenandoah Switchgrass	0	3	9	0	0	0	0	0	0	5	0	0	3	0	0	3	3	0	0	0	0	0	3	0	0	18	8	0	0	3	0	0	0	0	0	0	6	3	3	4	6	3	0	0	3	0	0	0	9	0	0	7	0	0	0	0	0	0	13	8	0	123
Zone 2 Basin Plantings (60% SF BMP)	Aesclepias incamata 'Soulmate' / Swamp Milkweed	3	5	12	0	0	0	0	0	0	0	0	0	12	15	8	0	0	8	6	14	14	9	0	0	7	20	10	0	0	7	6	4	0	0	0	0	0	9	0	0	0	0	0	0	0	0	0	10	20	0	0	0	14	0	0	0	0	0	0	0	9	222
	Aster novae-angliae/ 'English Countryside' Aster	0	0	0	15	0	0	0	0	0	0	0	0	5	0	0	10	7	0	0	0	0	0	4	0	0	0	0	6	10	0	0	0	0	0	0	0	10	0	0	0	15	10	0	0	0	0	0	0	14	0	0	12	0	10	5	10	0	0	15	8	0	166
	Echinacea purpurea/ Purple Coneflower	6	8	0	16	11	5	8	8	7	0	0	0	0	15	13	0	0	0	0	0	0	0	0	9	14	0	0	0	6	0	10	8	0	0	0	0	0	10	0	0	10	7	0	0	0	0	0	7	0	0	10	0	8	0	0	0	0	10	20	8	0	234
	Iris versicolor / Blue Flag Iris	0	0	14	0	11	5	8	10	10	10	33	20	0	14	0	0	0	0	0	9	9	0	6	0	0	30	21	8	10	0	0	0	14	6	5	0	15	0	4	0	0	0	10	11	8	14	15	0	0	7	13	0	0	16	10	12	8	0	16	16	10	438
	Osmundia cinnamomea / Cinnamon Fern	0	0	0	0	0	0	0	0	0	0	20	22	0	0	0	0	0	0	0	0	0	0	0	0	0	0	0	0	0	0	0	0	14	8	0	0	0	0	0	0	0	0	10	15	0	15	15	0	0	14	0	0	0	0	0	0	0	0	0	0	0	133
	Rudbeckia fulgida 'Goldstrum'/ Black-Eyed Susan	0	0	12	0	11	9	8	8	0	9	0	0	0	0	0	10	8	0	6	0	0	0	0	10	0	22	10	0	0	8	0	0	0	0	0	0	0	0	0	0	0	0	0	0	4	0	0	10	0	0	0	15	0	0	0	0	0	16	0	0	0	176
Zone 3 Shrub Plantings (25% SF BMP)	Clethra alnifolia 'Hummingbird' / Hummingbird Summersweet	0	0	5	0	0	0	0	0	0	3	0	0	0	5	3	0	0	0	0	0	0	0	0	0	0	10	4	0	0	0	0	0	0	0	0	0	0	0	0	0	3	0	0	0	0	0	0	4	5	0	3	0	0	0	0	0	0	0	7	4	0	56
	Vibrunum dentatum 'Christom'/ Arrowwood Viburnum	0	0	0	4	4	3	3	4	0	0	7	6	0	0	0	0	0	0	0	0	0	0	0	0	0	0	0	0	0	0	0	0	0	0	0	0	0	0	0	0	0	0	3	3	0	4	4	0	0	3	0	4	0	4	0	0	0	3	0	0	3	62

McCormick Taylor
Engineers & Planners Since 1946
509 South Exeter Street
4th Floor
Baltimore, Maryland 21202
(410) 662–7400

LANDSCAPE PLAN

FRANKLIN KNOLLS-PHASE 4

SLIGO (13th) ELECTION DISTRICT

PARCEL X, SUBDIVISION X, LIBER X FOLIO X

MONTGOMERY COUNTY, MARYLAND

CLIENT: MONTGOMERY COUNTY DEPT OF ENVIRONMENTAL PROTECTION
255 ROCKVILLE PIKE, RM. 120
ROCKVILLE, MD 20850-4166
MR. PAUL BOGLE, P.E.
(240) 777-7757

DESIGN	KKM
DRAFT	WJW
APPROVED	HJD
DATE	JUNE 2014
SCALE	1" = 10'

SHEET 52 OF 52

FILE: I:\53\52\13 - Roadway LID – Forest Estates and the Four Corners Area\Design\Engineering\PlanSet\FK P4\p\LD-D001_FK4.dgn
PLOTTED: Thursday, June 05, 2014 AT 02:47 PM