WRE 12
TASK ORDER 01
POTOMAC RIDGE SWM POND 'B' RETROFIT (ASSET #10876)
STORMWATER MANAGEMENT CONCEPT
NOT FOR CONSTRUCTION

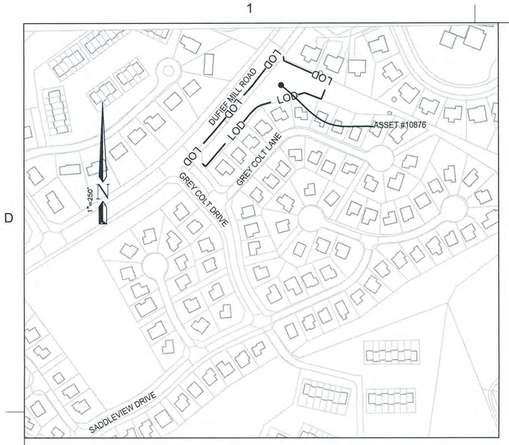

LOCATION MAP
SCALE: 1"=250'

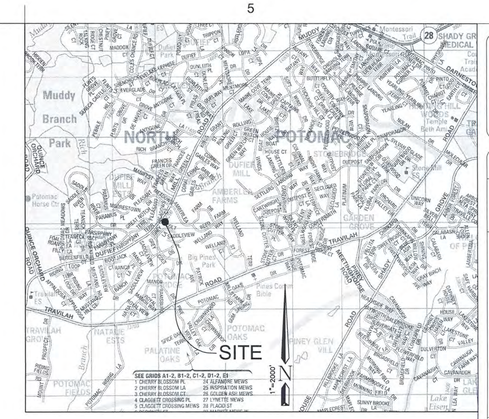

VICINITY MAP
SCALE: 1"=2000'
Map 5163, Grid C7
Map Copyright©Kappa LLC
(800)-829-6277 Used with Permission

Department of Environmental Protection
Montgomery County Maryland

INDEX TO DRAWINGS		
SHEET NO.	TITLE	SHEET NAME
1	COVER SHEET	CV-01
2	MASTER LEGENDS AND ABBREVIATIONS	ML-01
3	DRAINAGE AREA MAP	DA-01
4	EXISTING CONDITIONS PLAN	EC-01
5	EXISTING CONDITION PROFILE	EC-02
6	DEMOLITION-EXISTING CONDITIONS PLAN	EC-03
7	GRADING AND LAYOUT PLAN	GR-01
8	PROFILES	PR-01
9	RISER DETAILS	PR-02
10	SOIL BORING LOGS	SB-01
11	LANDSCAPE PLAN	LP-01
12	LANDSCAPE DETAILS	LP-02

TO ACCOMPANY SPECIFICATIONS INVITATION NO. XXXXX
DATED:

MISS UTILITY

THE CONTRACTOR SHALL CALL "MISS UTILITY" AT 1-800-257-7777, 48 HOURS PRIOR TO THE START OF WORK. THE CONTRACTOR IS RESPONSIBLE FOR ENSURING THAT ALL UNDERGROUND UTILITIES IN THE AREA OF PROPOSED WORK ARE LOCATED PRIOR TO COMMENCING CONSTRUCTION WORK. THE CONTRACTOR IS RESPONSIBLE FOR COMPLIANCE WITH REQUIREMENTS OF CHAPTER 36A OF THE MONTGOMERY COUNTY CODE.

THE CONTRACTOR IS ALSO RESPONSIBLE FOR LOCATING ALL PRIVATE UTILITIES (NOT LOCATED BY MISS UTILITY) WITHIN M-NCPPC PROPERTY AT THEIR EXPENSE. ALL UTILITIES SHOWN ON THE PLANS ARE PROVIDED FOR INFORMATION ONLY AND SHALL BE CONSIDERED APPROXIMATE. M-NCPPC SHALL NOT BE RESPONSIBLE FOR LOCATING UNDERGROUND UTILITIES. ANY UTILITIES OR OTHER UNDERGROUND FACILITIES DAMAGED DURING CONSTRUCTION SHALL BE REPAIRED/REPLACED AT THE CONTRACTOR'S SOLE EXPENSE.

TRAVERSE CHART				
TRAVERSE POINT	NORTHING	EASTING	ELEV.	DESCRIPTION
120	517407.757	1244913.084	357.96'	REBAR AND CAP
122	517647.094	1245109.248	351.64'	MAG NAIL SET

SEQUENCE OF CONSTRUCTION FOR
POTOMAC RIDGE POND "B" (MCDEP ASSSET # 10876)
SWM POND RETROFIT

Notes:

a. *Sediment controls may be added, deleted, or field adjusted by the MCDPS Sediment Control Inspector at any time.*

b. *For all stakeouts involving grading of any kind, contractor to provide Owner and Engineer with cut sheet a minimum of 72 hours in advance of grading.*

Preconstruction

1. Prior to clearing of trees, installing sediment control measures, grading, or any other land disturbing activities, a preconstruction meeting must be conducted on-site with the:

a) Montgomery County Department of Permitting Services (MCDPS) Sediment Control Inspector (240) 777-6210 (48 hours' notice)

b) M-NCPPC Forest Conservation Inspector (301) 495-4581 (48 hours' notice)

c) Owner's representative (240) 777-7772 (48 hour's notice)

d) Engineer (301) 434-7000 (48 hour's notice)

The limits of disturbance must be field-marked prior to holding the preconstruction meeting.

Sediment Control Installation

2. Clear and grade for installation of sediment control devices only.
3. Install sediment control devices.
4. Once the sediment control devices are installed, the contractor must obtain written approval from the MCDPS inspector before proceeding with any additional clearing, grubbing, or grading.

Embankment Construction Asset# 10876

Notes:

a. *Items 7-10 to be done under supervision of the professional geotechnical engineer of record.*

b. *This work can be done concurrently with item 19-21.*

5. Excavate embankment of Asset # 10876 for installation of core trench, cut-off trench, twin 21" principal spillway pipe and filter diaphragm.
6. Remove and demolish existing twin CMP principal spillway pipes, low flow pipe and circular risers.
7. Install impervious cutoff trench and lower portion of filter diaphragm in excavated embankment.
8. Install RCP spillway pipe and cradle.
9. Install remaining of embankment including clay core and upper portion of filter diaphragm including drainage pipes.
10. Install head wall on RCP principal spillway pipe.
11. Grade principal spillway outfall for rip-rap and install rip-rap channel.

Riser Structure Replacement Asset# 10876

Note:

a. *Items 12-17 to be done under supervision of the professional geotechnical engineer of record.*

b. *All reinforcement & formwork is t be inspected by the geotechnical engineer of record prior to closing forms.*

c. *Forms shall not be removed for seven days after pour.*

d. *All hot & cold weather connecting should be done as required per ACI-305 & 306 (latest revision respectively.)*

12. Excavate for riser foundation.
13. Form and pour riser foundation.
14. Install low flow pipe stub.
15. Form & pour riser walls around principal spillway pipes & low flow pipe stub.
16. Form and pour top slab.
17. Install low riser steps, manhole covers and trash racks on riser.
18. Backfill around riser and low flow after 28 days of curing.

Pond Grading Asset# 10876

Notes:

a. Realign storm drain pipes entering the pond.

19. Re-grade pond to its final contours.
20. Install riprap, geotextile, underdrain and check dams within the limits as shown on plans.

Miscellaneous Repairs and Modifications

21. Install safety fencing.
22. Install all landscaping.
23. Permanently seed and stabilize the limits of disturbance.

Project Closeout

24. Obtain a punch list inspection from the Owner, Engineer, and MCDPS Sediment Control Inspector.
25. Address all punch list items to the satisfaction of the Owner, Engineer, and MCDPS sediment control inspector.
26. Hold a final inspection with the Owner and Engineer, and MCDPS Sediment Control Inspector.
27. Obtain written approval from the MCDPS Sediment Control Inspector to remove all sediment control devices.

Engineer to complete as-built survey and obtain approval of as-built drawings and final report within 60 days of completion of final inspection by MCDPS.

RELATED REQUIRED PERMITS

To be completed by the consultant and placed on the first sheet of the Sediment Control/Stormwater Management plan set for all projects

IT IS THE RESPONSIBLITY OF PERMITTEE/OWNER OF THIS SITE TO OBTAIN ALL REQUIRED PERMITS PRIOR TO ISSUANCE OF THE APPROVED SEDIMENT CONTROL PERMIT:

TYPE OF PERMIT	REQ'D	NOT REQ'D	PERMIT NO.	EXPIRATION DATE	WORK RESTRICTION DATES
MCDPS Floodplain district		X			
WATERWAYS/WETLAND(S) a. Corps of Engineers		X			
b. MDE		X			
c. MDE Water Quality Certification		X			
MDE Dam Safety		X			
NPDES NOTICE OF INTENT	X		NA	NA	DATE FILED
OTHERS (Please List):					
MNCPPC		X			
WSSC	X				
DPS ROW ACCESS	X				

MS4 SUMMARY TABLE - POND/WETLAND												
"FACILITY ID"	FACILITY TYPE	DRAINAGE AREA (AC)1	"CREDITED IA (AC)2"	TARGETED WQv (AC-FT)	PROVIDED WQv (AC-FT)	TARGETED CPv (AC-FT)	PROVIDED CPv (AC-FT)	TARGETED CP RELEASE RATE (CFS)	PROVIDED CP RELEASE RATE (CFS)	TARGETED ESDv (AC-FT)	PROVIDED ESDv (AC-FT)
10876	POND	7.94	1.74	0.16	0.00	0.46	0.00	0.20	0.13	N/A	N/A
10876	INF. TRENCH	7.94	1.74	0.16	0.05	0.00	0.00	N/A	N/A	N/A	N/A

1. Drainage area is the total physical drainage area to the facility, including child facilities.
2. Credited impervious area is the currently untreated impervious area that falls within Montgomery County's MS4 jurisdiction.

PROJECT BENEFITS

1. Improved stormwater management through increased channel protection and water quality.
2. Safety improvements to dam and basin slopes.
3. Improved aesthetics through landscaping.
4. Maintain control of 2-year release rate the existing pond is providing.

SITE ADDRESS:
POTOMAC RIDGE SWM POND "B"
DARNESTOWN, MD 20878

SEAL:
STATE OF MARYLAND
JEFFREY BRIAN MAGE
No. 32457
PROFESSIONAL ENGINEER

PROPERTY DESCRIPTION:
POTOMAC RIDGE HOME OWNERS ASSOCIATION
PARCEL A

PLAT NO. L. 06829/ F. 0441
TAX MAP

PROFESSIONAL CERTIFICATION
I HEREBY CERTIFY THAT THESE DOCUMENTS WERE PREPARED OR APPROVED BY ME, AND THAT I AM A DULY LICENSED PROFESSIONAL ENGINEER UNDER THE LAWS OF THE STATE OF MARYLAND.

LICENSE #: 32457

EXPIRATION DATE: 06/20/2014

MONTGOMERY COUNTY DEPARTMENT OF PERMITTING SERVICES APPROVED FOR:

STORMWATER MANAGEMENT
REVIEWED DATE
APPROVED DATE

SEDIMENT CONTROL TECHNICAL REQUIREMENTS:
REVIEWED DATE
APPROVED DATE

S.M.FILE NO.

NOTE: MCDPS APPROVAL DOES NOT NEGATE THE NEED OF A MCDPS ACCESS PERMIT

ADMINISTRATIVE REQUIREMENTS:
REVIEWED DATE

SEDIMENT CONTROL PERMIT NO.

MCDPS APPROVAL OF THIS PLAN WILL EXPIRE ONE YEAR FROM THE DATE OF APPROVAL. IF THE PROJECT HAS NOT STARTED, UNLESS THE PERMIT HAS BEEN EXTENDED.

MARK	DESCRIPTION	DATE	APPR.	MARK	DESCRIPTION	DATE	APPR.

DATE: JAN., 2014
TASK ORDER NO.: 12-01
CONTRACT NO.:
FILE NUMBER:
DESIGNED BY: BMF
DWN BY: ADG
CKD BY: JBB
SUBMITTED BY:
PLOT SCALE: AS SHOWN
PLOT DATE: 4/5/2013
SIZE: ANSI D
FILE NAME: 01-EC-02.DWG

MR CRAIG CARSON 240-777-7713
MONTGOMERY COUNTY DEPARTMENT OF ENVIRONMENTAL PROTECTION
255 ROCKVILLE PIKE
ROCKVILLE, MD 20850

CPJ Associates

TASK ORDER 12-01
POTOMAC RIDGE SWM POND RETROFIT
(ASSET #10876) - NOT FOR CONSTRUCTION
DARNESTOWN (6TH) ELECTION DISTRICT
MONTGOMERY COUNTY, MARYLAND

COVER SHEET

SHEET NO.
1 OF 12

CV-01

Attached Xrefs:

MASTER LEGEND

- EXISTING CONTOURS
- EXISTING INDEX CONTOURS
- PROPOSED CONTOURS — 452
- PROPOSED INDEX CONTOURS — 450
- EXISTING STORM DRAIN PIPE — EX. 36" C.M.P.
- PROPOSED STORM DRAIN PIPE — 36" C.M.P.
- PROPOSED LIMITS OF DISTURBANCE — LOD LOD
- DRAINAGE DIVIDE
- DRAINAGE FLOWPATH POINT — A
- FLOWPATH
- TIME OF CONCENTRATION POINT
- LAND USE/LAND COVER BOUNDARY LINE — LU LU
- EXISTING SOIL DIVIDE
- SOIL TYPE DEMARCATION — 2B
- 100 YEAR FLOOD PLAIN
- 1 YEAR WATER SURFACE ELEV.
- 10 YEAR WATER SURFACE ELEV.
- 100 YEAR WATER SURFACE ELEV.
- PROPOSED/EXISTING RIPRAP
- WOOD FENCE
- EX. SEWER LINE (BASED UPON WSSC PLANS) — SEW SEW
- EXISTING PROPERTY LINE
- EXISTING SWM EASEMENT
- PROPOSED SWM EASEMENT
- CONSTRUCTION SAFETY FENCE — XX XX XX
- EX. WATER LINE (BASED UPON WSSC PLANS) — W W W
- EX. SEWER MANHOLE — S
- EX. STORMDRAIN MANHOLE — D
- EX. LIGHT POLE
- EX. SIGN
- EX. FIRE HYDRANT
- EX. TREE TO BE REMOVED
- EX. TREE TO REMAIN
- SUMP PIT — SP
- PUMP
- FILTER BAG — FB
- SILT FENCE ON PAVEMENT — SFOP SFOP SFOP
- STAGING/STOCKPILE AREA
- ORANGE BLAZE SAFETY FENCE — OX OX OX
- STRUCTURAL LABEL — HW
- HEADWALL/ EMZ WALL
- TRAVERSE POINT — 642
- STABILIZED CONSTRUCTION ENTRANCE — SCE
- DRAINAGE SLOPE — 3:1
- SILT FENCE — SF SF SF
- SUPER SILT FENCE — SSF SSF SSF

MASTER LIST OF ABBREVIATIONS

Ac.	-	ACRE(S)
ACI	-	AMERICAN CONCRETE INSTITUTE
ASTM	-	AMERICAN SOCIETY FOR TESTING MATERIALS
℄	-	CENTERLINE
C/C	-	CENTER-TO-CENTER
CF	-	CUBIC FEET
cfs	-	CUBIC FEET PER SECOND
CL	-	CLASS
C.M.P.	-	CORRUGATED METAL PIPE
CPv	-	CHANNEL PROTECTION VOLUME
D	-	DEPTH
DA	-	DRAINAGE AREA
D50	-	50TH PERCENTILE OF DIAMETER
D.I.P.	-	DUCTILE IRON PIPE
EX.	-	EXISTING
f.p.s.	-	FEET PER SECOND
FT	-	FEET
GALV.	-	GALVANIZED
H.D.P.E.	-	HIGH DENSITY POLYETHYLENE
HGL	-	HYDRAULIC GRADE LINE
HSG	-	HYDROLOGIC SOIL GROUP
INV.	-	INVERT
L	-	LENGTH OF CURVE (CURVE DATA)
L.F.	-	LINEAR FEET
MCDPS	-	MONTGOMERY COUNTY DEPARTMENT OF PERMITTING SERVICES
MDE	-	MARYLAND DEPARTMENT OF THE ENVIRONMENT
MH	-	MANHOLE
MNCPPC	-	MARYLAND NATIONAL CAPITAL PARK AND PLANNING COMMISSION
MSHA	-	MARYLAND STATE HIGHWAY ADMINISTRATION
NTS	-	NOT TO SCALE
RCN	-	RUNOFF CURVE NUMBER
R.C.P.	-	REINFORCED CONCRETE PIPE
S.S.	-	SIDE SLOPE
S.W.M.	-	STORMWATER MANAGEMENT
T	-	TANGENT (CURVE DATA)
TBR	-	TO BE REMOVED
Tc	-	TIME OF CONCENTRATION
TYP.	-	TYPICAL
V	-	VELOCITY
WQv	-	WATER QUALITY VOLUME
Ø	-	DIAMETER

MISS UTILITY

Call "Miss Utility" at 1-800-257-7777, 48 hours prior to the start of work. The excavator must notify all public utility companies with underground facilities in the area of proposed excavation and have those facilities located by the utility companies prior to commencing excavation. The excavator is responsible for compliance with requirements of Chapter 36A of the Montgomery County Code.

SEAL: STATE OF MARYLAND — STEPHEN BRIAN BLAKE — No. 32457 — PROFESSIONAL ENGINEER — ORIGINAL SEAL

PROFESSIONAL CERTIFICATION
I HEREBY CERTIFY THAT THESE DOCUMENTS WERE PREPARED OR APPROVED BY ME, AND THAT I AM A DULY LICENSED PROFESSIONAL ENGINEER UNDER THE LAWS OF THE STATE OF MARYLAND.

LICENSE #: 32457

EXPIRATION DATE: 06/20/2014

MONTGOMERY COUNTY DEPARTMENT OF PERMITTING SERVICES APPROVED FOR:

STORMWATER MANAGEMENT — REVIEWED DATE — APPROVED DATE — S.M.FILE NO.

SEDIMENT CONTROL TECHNICAL REQUIREMENTS: — REVIEWED DATE — APPROVED DATE

NOTE: MCDPS APPROVAL DOES NOT NEGATE THE NEED OF A MCDPS ACCESS PERMIT

ADMINISTRATIVE REQUIREMENTS: — REVIEWED DATE — SEDIMENT CONTROL PERMIT NO.

MCDPS APPROVAL OF THIS PLAN WILL EXPIRE ONE YEAR FROM THE DATE OF APPROVAL. IF THE PROJECT HAS NOT STARTED, UNLESS THE PERMIT HAS BEEN EXTENDED.

Department of Environmental Protection — Montgomery County Maryland

MARK	DESCRIPTION	DATE	APPR.

MARK	DESCRIPTION	DATE	APPR.

MR. CRAIG CARSON 240-777-7713
MONTGOMERY COUNTY DEPARTMENT OF ENVIRONMENTAL PROTECTION
255 ROCKVILLE PIKE
ROCKVILLE, MD 20850

CPJ Associates

DESIGNED BY: BBF — DATE: JAN. 2014
DWN BY: ADG — CKD BY: JBB — TASK ORDER NO.: 12-01
SUBMITTED BY: JBB — CONTRACT NO.:
PLOT SCALE: AS-SHOWN — PLOT DATE: 1/20/2014 — FILE NUMBER:
SIZE: ANSI D — FILE NAME: 01-EC-02.DWG

TASK ORDER 12-01
POTOMAC RIDGE SWM POND RETROFIT
(ASSET #10876) - NOT FOR CONSTRUCTION
DARNESTOWN (6TH) ELECTION DISTRICT
MONTGOMERY COUNTY, MARYLAND

MASTER LEGENDS AND ABBREVIATIONS

SHEET NO. 2 OF 12

ML-01

Attached Xrefs:

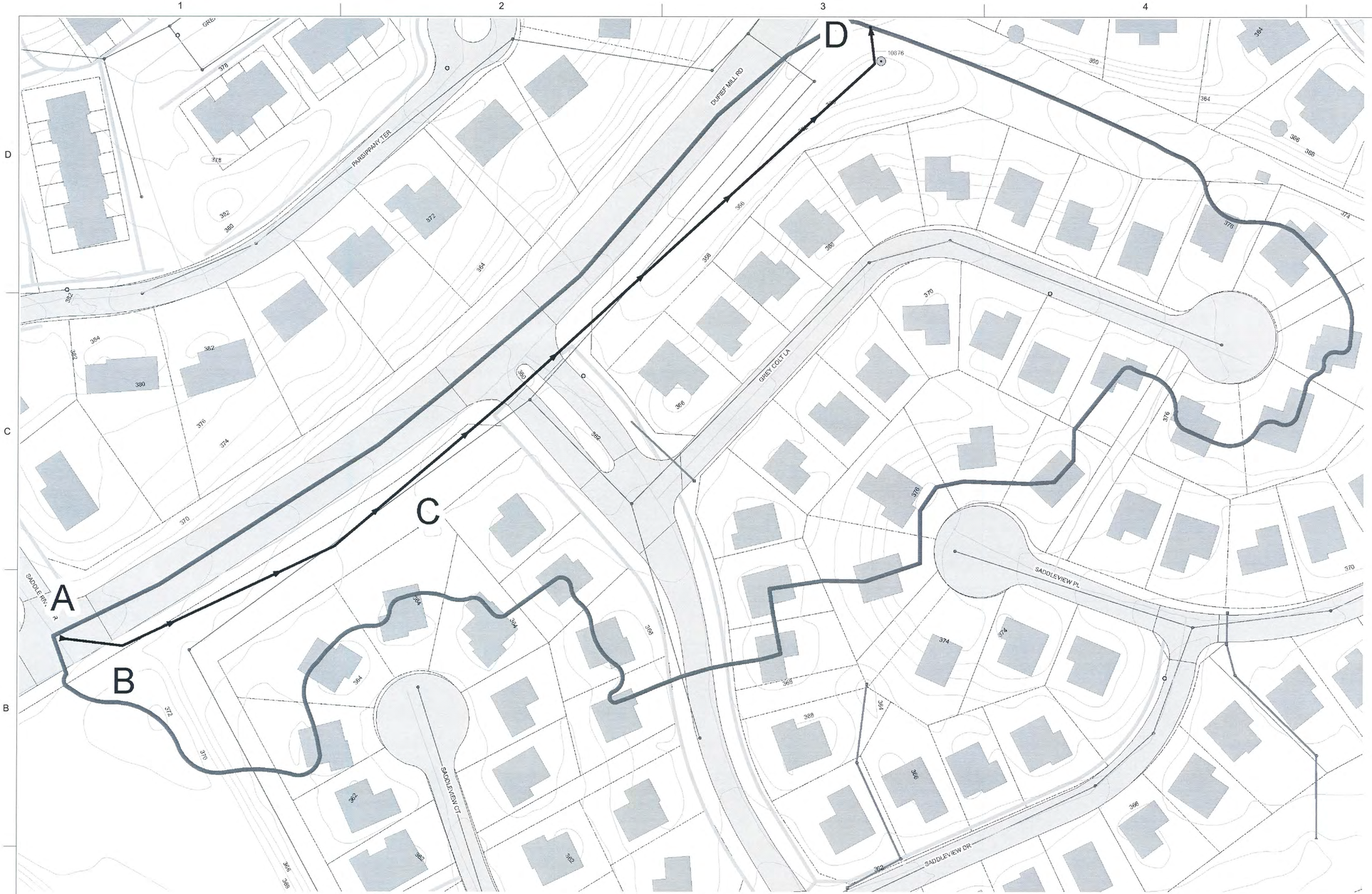

N

Land Use/Soils Composition	
Land Use/Hydrologic Soil Group	B
Streets/Roads	0.46
Medium Density Residential	6.93

Hydrologic Summary	
Name	Potomac Ridge SWM Pond 'B'
MCDEP Asset	10876
Drainage Area	7.94 Acres
RCN	78
Time of Concentration	0.10 hours

GRAPHICAL SCALE

0 100' 200'

Flow Path Summary					
Segment/Parameter	Flow Type	Length	Slope	Velocity	Surface
A to B	Sheet Flow	50 LF	2%	N/A	Paved
B to C	Shallow Concentrated	315 LF	2.20%	N/A	Unpaved
C to D	Open Channel	560 LF	N/A	4.0 fps	Natural/Stone Channel

Legend

- Drainage Divide
- TOC Flow Path
- TOC Point of Interest
- 2 Foot Contours

SEAL:

STATE OF MARYLAND
JEFFREY BRIAN BLAND
PROFESSIONAL ENGINEER

PROFESSIONAL CERTIFICATION
I HEREBY CERTIFY THAT THESE DOCUMENTS WERE PREPARED OR APPROVED BY ME, AND THAT I AM A DULY LICENSED PROFESSIONAL ENGINEER UNDER THE LAWS OF THE STATE OF MARYLAND.

LICENSE #: 32457

EXPIRATION DATE: 06/20/2014

MONTGOMERY COUNTY DEPARTMENT OF PERMITTING SERVICES APPROVED FOR:

STORMWATER MANAGEMENT

REVIEWED DATE

APPROVED DATE

S.M.FILE NO.

SEDIMENT CONTROL TECHNICAL REQUIREMENTS:

REVIEWED DATE

APPROVED DATE

NOTE: MCDPS APPROVAL DOES NOT NEGATE THE NEED OF A MCDPS ACCESS PERMIT

ADMINISTRATIVE REQUIREMENTS:

REVIEWED DATE

SEDIMENT CONTROL PERMIT NO.

MCDPS APPROVAL OF THIS PLAN WILL EXPIRE ONE YEAR FROM THE DATE OF APPROVAL, IF THE PROJECT HAS NOT STARTED, UNLESS THE PERMIT HAS BEEN EXTENDED.

MISS UTILITY

Call "Miss Utility" at 1-800-257-7777, 48 hours prior to the start of work. The excavator must notify all public utility companies with underground facilities in the area of proposed excavation and have those facilities located by the utility companies prior to commencing excavation. The excavator is responsible for compliance with requirements of Chapter 36A of the Montgomery County Code.

Department of Environmental Protection
Montgomery County Maryland

MARK	DESCRIPTION	DATE	APPR.	MARK	DESCRIPTION	DATE	APPR.

MR. CRAIG CARSON 240-777-7713
MONTGOMERY COUNTY DEPARTMENT OF ENVIRONMENTAL PROTECTION
255 ROCKVILLE PIKE
ROCKVILLE, MD 20850

CPJ Associates

DESIGNED BY: BMF
DWN BY: ADG
CKD BY: JBB
SUBMITTED BY: JBB
PLOT SCALE: 1"=100'
SIZE: ANSI D
PLOT DATE: 1/20/2014
FILE NAME: 01-EC-02.DWG

DATE: JAN. 2014
TASK ORDER NO.: 12-01
CONTRACT NO.:
FILE NUMBER:

TASK ORDER 12-01
POTOMAC RIDGE SWM POND RETROFIT
(ASSET #10876) - NOT FOR CONSTRUCTION
DARNESTOWN (6TH) ELECTION DISTRICT
MONTGOMERY COUNTY, MARYLAND

DRAINAGE AREA MAP

SHEET NO.
3 OF 12

DA-01

Attached Xref's:

Last Saved 1/20/2014 Last Plotted 1/21/2014 9:32 AM Sheet N:\43030\DWG\01-EC-02

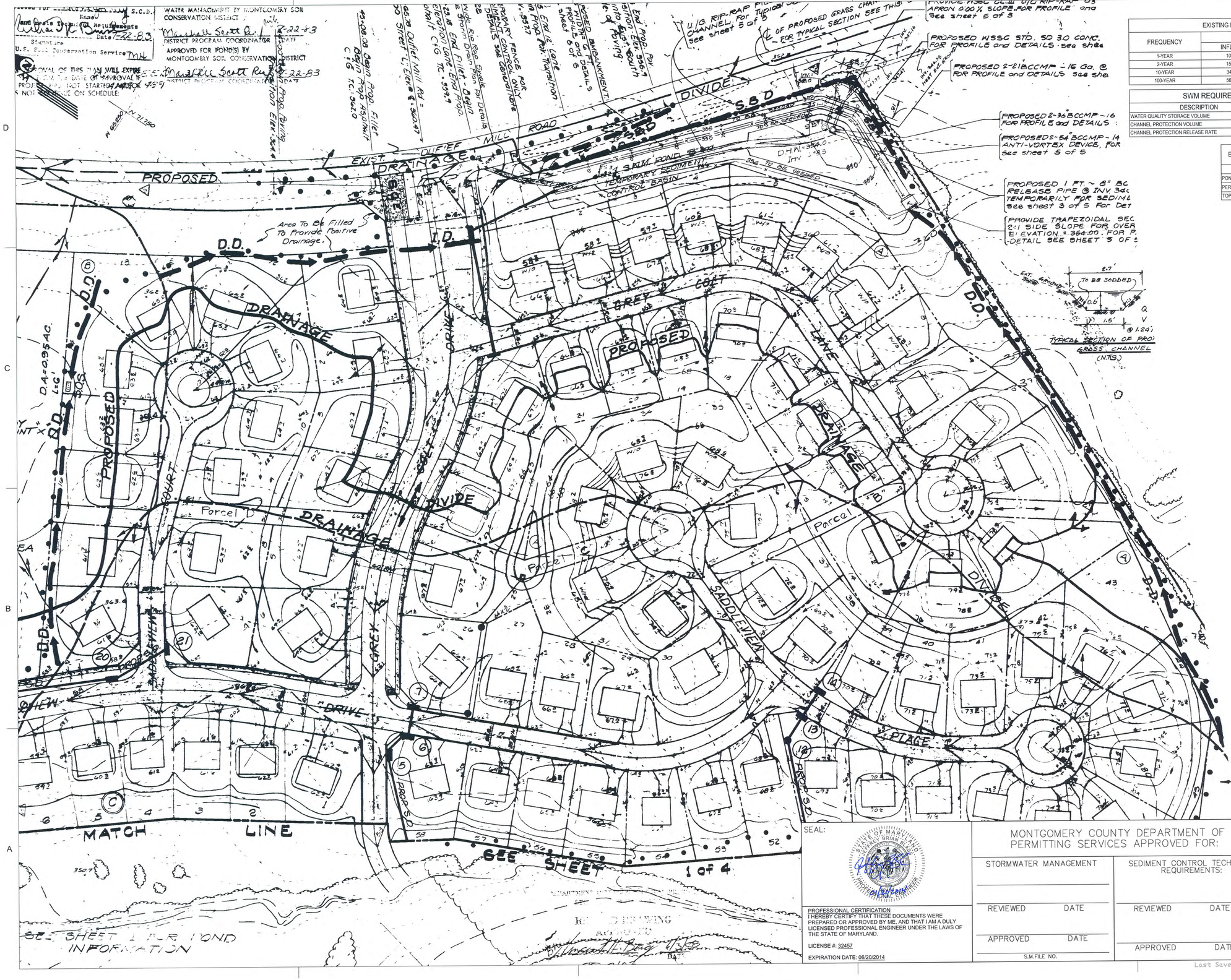

EXISTING POND ROUTING ASSET # 10876			
FREQUENCY	PEAK DISCHARGE (cfs)		POND WSEL (ft)
	INFLOW	OUTFLOW	
1-YEAR	10.06	1.68	351.37
2-YEAR	15.38	1.95	352.48
10-YEAR	34.21	27.38	353.34
100-YEAR	56.43	46.15	353.87

SWM REQUIREMENT VS. PROVIDED CAPACITY			
DESCRIPTION	UNIT	REQUIRED	PROVIDED
WATER QUALITY STORAGE VOLUME	Ac-ft	0.16	N/A
CHANNEL PROTECTION VOLUME	Ac-ft	0.37	0.36
CHANNEL PROTECTION RELEASE RATE	cfs	0.20	1.68

EXISTING POND DATA	FOR ASSET # 10876
DESCRIPTION	ELEVATION
POND BOTTOM	347.60
PERMANENT POOL	N/A
TOP OF DAM	354.50

GRAPHIC SCALE
50 0 25 50 100
SCALE: 1" = 50'

SEAL:

STATE OF MARYLAND
BRIAN R. PAGE
PROFESSIONAL ENGINEER

PROFESSIONAL CERTIFICATION
I HEREBY CERTIFY THAT THESE DOCUMENTS WERE PREPARED OR APPROVED BY ME, AND THAT I AM A DULY LICENSED PROFESSIONAL ENGINEER UNDER THE LAWS OF THE STATE OF MARYLAND.

LICENSE #: 32457

EXPIRATION DATE: 06/20/2014

MONTGOMERY COUNTY DEPARTMENT OF PERMITTING SERVICES APPROVED FOR:

STORMWATER MANAGEMENT

REVIEWED DATE

APPROVED DATE

S.M.FILE NO.

SEDIMENT CONTROL TECHNICAL REQUIREMENTS:

REVIEWED DATE

APPROVED DATE

NOTE: MCDPS APPROVAL DOES NOT NEGATE THE NEED OF A MCDPS ACCESS PERMIT

ADMINISTRATIVE REQUIREMENTS:

REVIEWED DATE

SEDIMENT CONTROL PERMIT NO.

MCDPS APPROVAL OF THIS PLAN WILL EXPIRE ONE YEAR FROM THE DATE OF APPROVAL IF THE PROJECT HAS NOT STARTED, UNLESS THE PERMIT HAS BEEN EXTENDED.

Department of Environmental Protection
Montgomery County Maryland

MARK	DESCRIPTION	DATE	APPR.	MARK	DESCRIPTION	DATE	APPR.

MR.CRAIG CARSON 240-777-7713
MONTGOMERY COUNTY DEPARTMENT OF ENVIRONMENTAL PROTECTION
255 ROCKVILLE PIKE
ROCKVILLE, MD 20850

CPJ Associates

DESIGNED BY: BWE
DWN BY: ADG
CKD BY: JBB
SUBMITTED BY: JBB
DATE: JAN., 2014
TASK ORDER NO.: 12-01
CONTRACT NO.:
PLOT SCALE: 1"=50'
PLOT DATE: 1/20/2014
FILE NUMBER:
SIZE: ANSI D
FILE NAME: 01-EC-02.DWG

TASK ORDER 12-01
POTOMAC RIDGE SWM POND RETROFIT
(ASSET #10876), MONTGOMERY COUNTY DEPARTMENT OF ENVIRONMENTAL PROTECTION
MONTGOMERY COUNTY, MARYLAND

EXISTING CONDITIONS PLAN

SHEET NO.
4 OF 12

EC-01

Attached Xrefs:

Last Saved 1/20/2014 Last Plotted 1/21/2014 9:32 AM Sheet N:\43030\DWG\01-EC-02

Reviewed for Montgomery County — S.C.D.
Name
Date
Signature
U.S. Soil Conservation Service
Date 7-22-83

APPROVED FOR MONTGOMERY COUNTY SOIL WATER MANAGEMENT & MONTGOMERY SOIL CONSERVATION DISTRICT
Marshall Scott Rice 7-22-83
DISTRICT PROGRAM COORDINATOR

APPROVED FOR MONTGOMERY COUNTY
Marshall Scott Rice 7-22-83
DISTRICT PROGRAM COORDINATOR

MSCD APPROVAL OF THIS PLAN WILL EXPIRE ONE YEAR FROM THE DATE OF APPROVAL IF THE PROJECT HAS NOT STARTED AND/OR DOES NOT CONTINUE

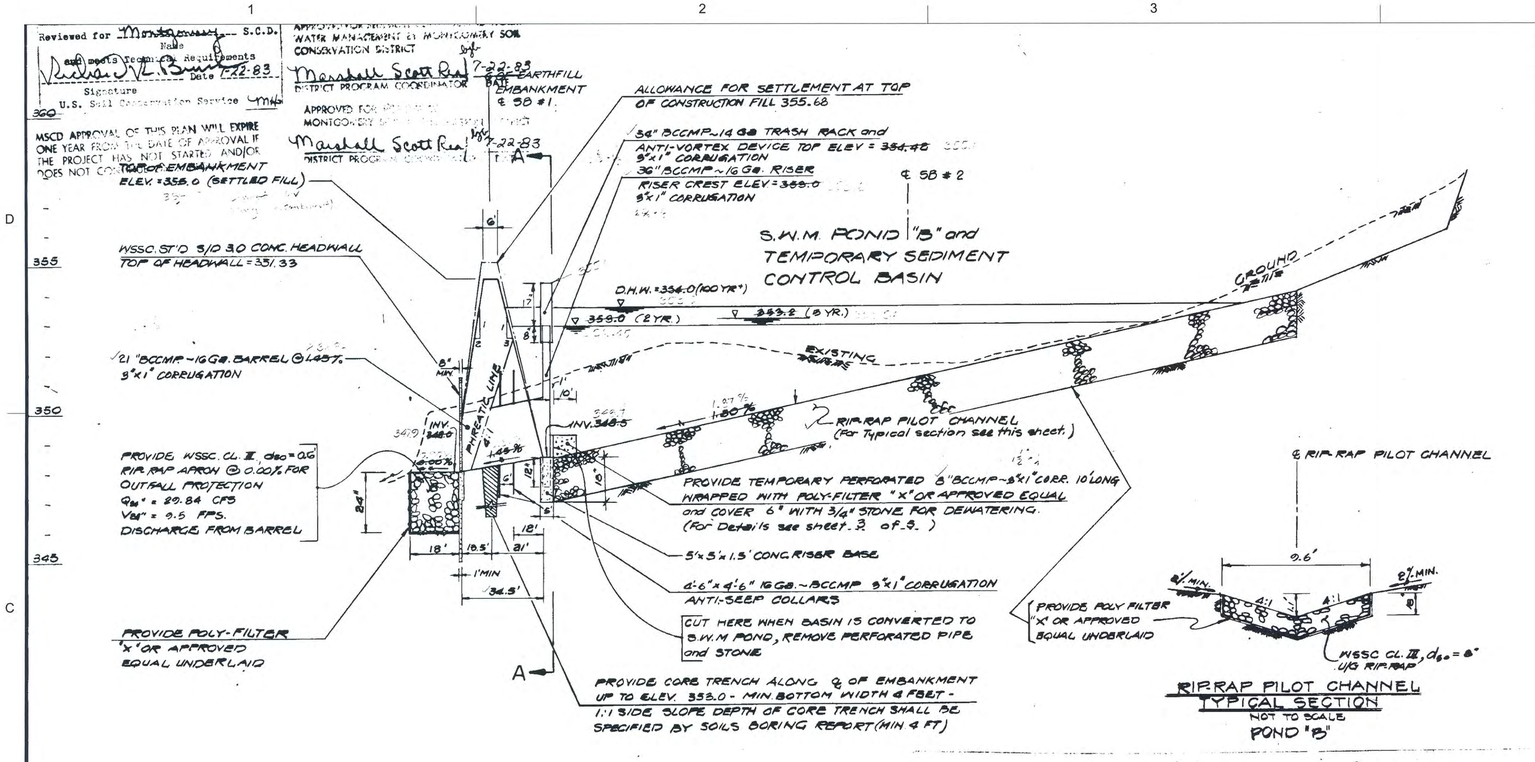

RIPRAP PILOT CHANNEL TYPICAL SECTION
NOT TO SCALE
POND "B"

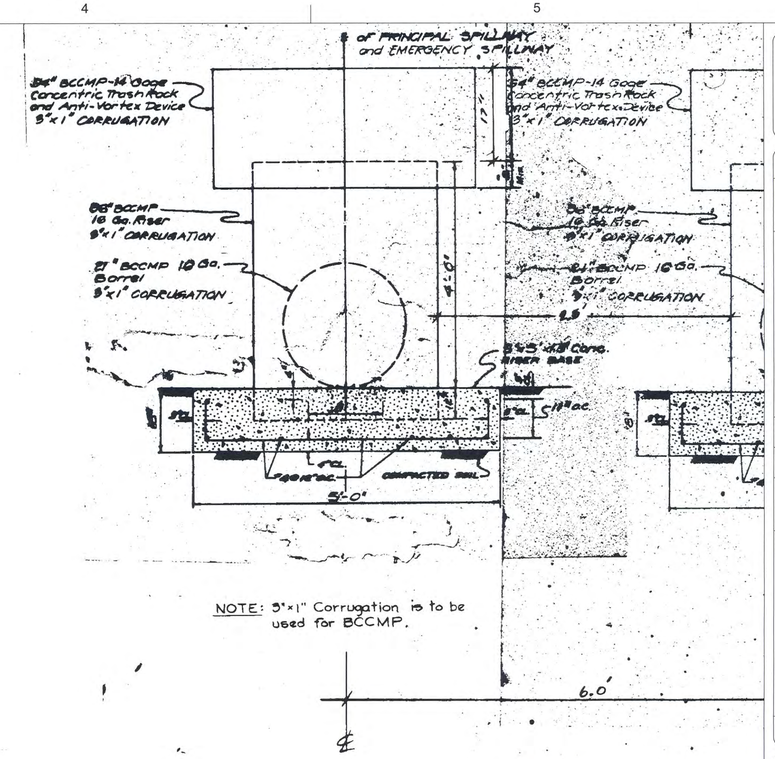

NOTE: 5"x1" Corrugation is to be used for BCCMP.

SECTION A-A
FOR SWM POND "B"
N.T.S.

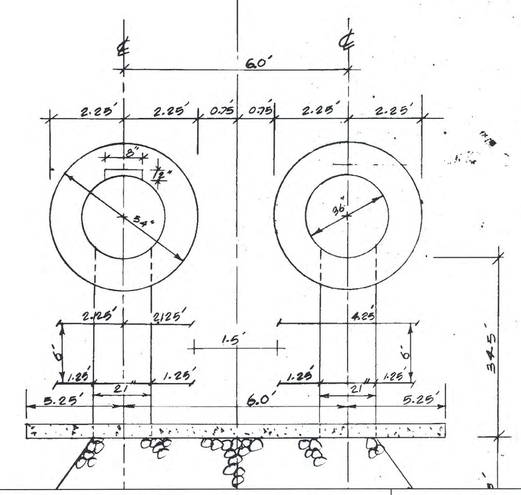

This pond is const
Management Plan a
meets the require
378 "Standards And

PROFILE ALONG ℄ OF PRINCIPAL SPILLWAY, EMERGENCY SPILLWAY AND ALONG RIP-RAP PILOT CHANNEL OF S.W.M. POND "B"
SCALE: HORIZ. 1" = 30'
VERT. 1" = 2.5'

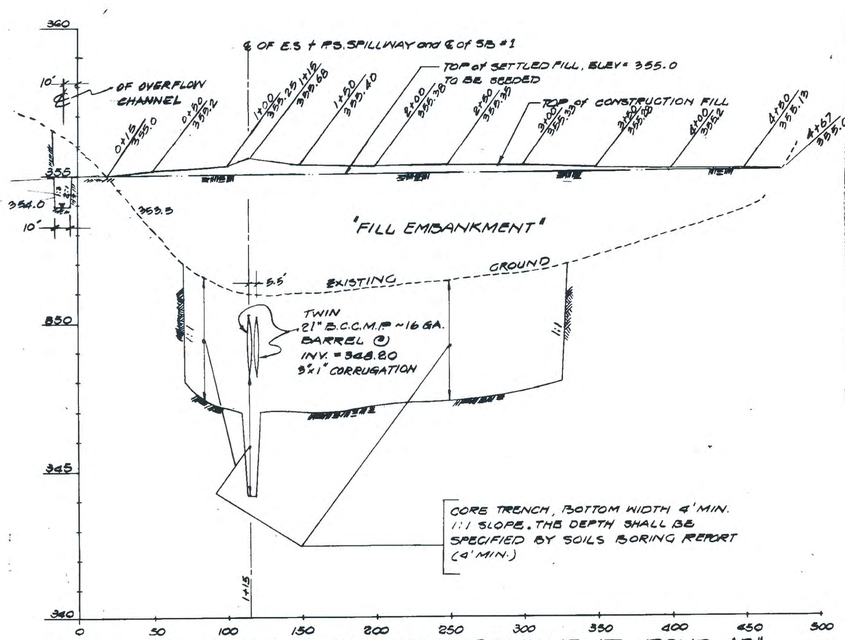

PROFILE ALONG ℄ TOP OF EMBANKMENT POND "B"
(For Stationing See Sheet 1 of 5)
SCALE: HORIZ. 1" = 50'
VERT. 1" = 2.5'

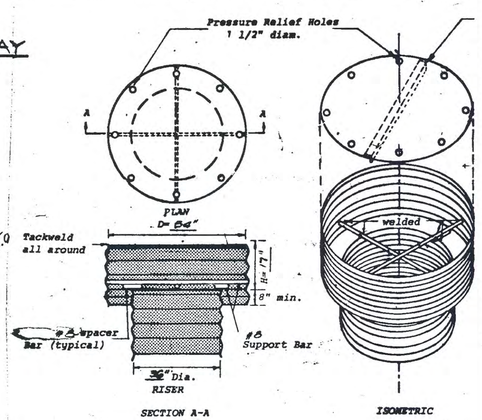

Top stiffener (if required) is N/A x x angle welded to top and oriented perpendicular to corrugations.

Top is 12 gage corrugated metal or 1/8" steel plate. Pressure relief holes may be omitted, if ends of corrugations are left fully open when corrugated top is welded to cylinder.

Cylinder is 14 gage corrugated metal pipe or fabricated from 1/8" steel plate.

Notes:
1) The cylinder must be firmly fastened to the top of the riser.
2) Support bars are welded to the top of the riser or attached by straps bolted to top of riser.

CONCENTRIC TRASH RACK AND ANTI-VORTEX DEVICE
(not to scale)
FOR S.W.M. POND "B"

DEPARTMENT OF ENVIRONMENTAL PROTECTION
STORMWATER MANAGEMENT

GRAPHIC SCALE
50 0 25 50 100
SCALE: 1" = 50'

AS-BUILT BY:

MONTGOMERY/K Engineers
2900 LINDEN LANE • SU

SEAL: STATE OF MARYLAND — JEFFREY BRIAN BLAND

PROFESSIONAL CERTIFICATION
I HEREBY CERTIFY THAT THESE DOCUMENTS WERE PREPARED OR APPROVED BY ME, AND THAT I AM A DULY LICENSED PROFESSIONAL ENGINEER UNDER THE LAWS OF THE STATE OF MARYLAND.
LICENSE #: 32457
EXPIRATION DATE: 06/20/2014

MONTGOMERY COUNTY DEPARTMENT OF PERMITTING SERVICES APPROVED FOR:

STORMWATER MANAGEMENT	SEDIMENT CONTROL TECHNICAL REQUIREMENTS:	ADMINISTRATIVE REQUIREMENTS:
REVIEWED DATE	REVIEWED DATE	REVIEWED DATE
APPROVED DATE	APPROVED DATE	SEDIMENT CONTROL PERMIT NO.
S.M.FILE NO.		MCDPS APPROVAL OF THIS PLAN WILL EXPIRE ONE YEAR FROM THE DATE OF APPROVAL. IF THE PROJECT HAS NOT STARTED, UNLESS THE PERMIT HAS BEEN EXTENDED.

NOTE: MCDPS APPROVAL DOES NOT NEGATE THE NEED OF A MCDPS ACCESS PERMIT

Department of Environmental Protection — Montgomery County Maryland

MARK	DESCRIPTION	DATE	APPR.	MARK	DESCRIPTION	DATE	APPR.

DESIGNED BY: JBB | DATE: JAN. 2014 | TASK ORDER NO.: 12-01
DWN BY: ADG | CKD BY: JBB | SUBMITTED BY: JBB | CONTRACT NO.:
PLOT SCALE: AS-SHOWN | PLOT DATE: 1/20/2014 | FILE NUMBER:
SIZE: ANSI D | FILE NAME: 01-EC-02.DWG

MR. CRAIG CARSON 240-777-7713
MONTGOMERY COUNTY DEPARTMENT OF ENVIRONMENTAL PROTECTION
255 ROCKVILLE PIKE
ROCKVILLE, MD 20850

CPJ Associates

TASK ORDER 12-01
POTOMAC RIDGE SWM RETROFIT
(ASSET #10876) - NOT FOR CONSTRUCTION
DARNESTOWN (6TH) ELECTION DISTRICT
MONTGOMERY COUNTY, MARYLAND

EXISTING CONDITION PROFILE

SHEET NO. 5 OF 12
EC-02

Attached XrefS:

Last Saved 1/20/2014 Last Plotted 1/21/2014 9:31 AM Sheet N:\43030\DWG\01-EC-02

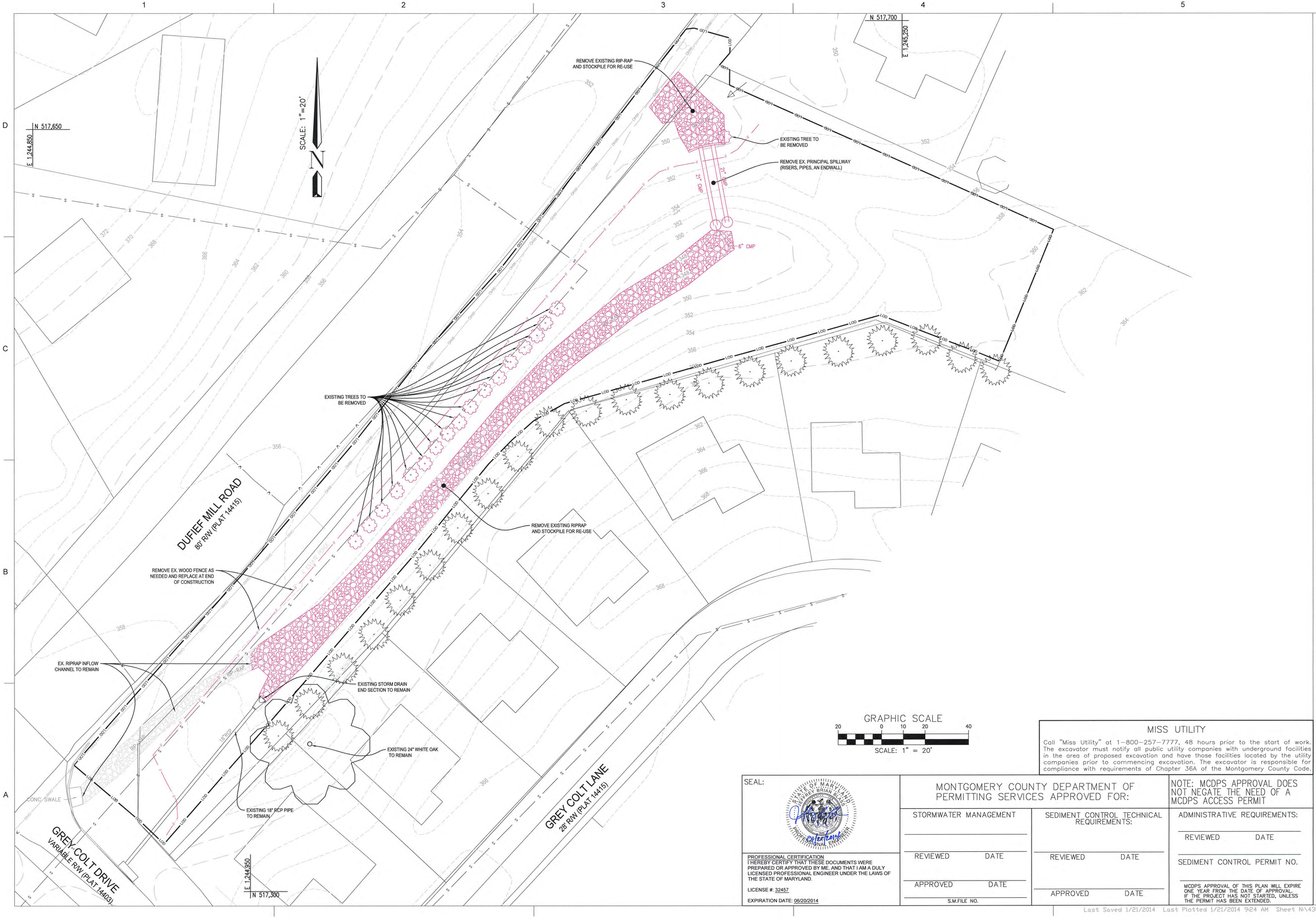

GRAPHIC SCALE

20 0 10 20 40

SCALE: 1" = 20'

MISS UTILITY

Call "Miss Utility" at 1-800-257-7777, 48 hours prior to the start of work. The excavator must notify all public utility companies with underground facilities in the area of proposed excavation and have those facilities located by the utility companies prior to commencing excavation. The excavator is responsible for compliance with requirements of Chapter 36A of the Montgomery County Code.

SEAL:

STATE OF MARYLAND — JEFFREY BRIAN BLAND — PROFESSIONAL ENGINEER

PROFESSIONAL CERTIFICATION
I HEREBY CERTIFY THAT THESE DOCUMENTS WERE PREPARED OR APPROVED BY ME, AND THAT I AM A DULY LICENSED PROFESSIONAL ENGINEER UNDER THE LAWS OF THE STATE OF MARYLAND.

LICENSE #: 32457

EXPIRATION DATE: 06/20/2014

MONTGOMERY COUNTY DEPARTMENT OF PERMITTING SERVICES APPROVED FOR:

STORMWATER MANAGEMENT	SEDIMENT CONTROL TECHNICAL REQUIREMENTS:	ADMINISTRATIVE REQUIREMENTS:
REVIEWED DATE	REVIEWED DATE	REVIEWED DATE
APPROVED DATE	APPROVED DATE	SEDIMENT CONTROL PERMIT NO.
S.M.FILE NO.		MCDPS APPROVAL OF THIS PLAN WILL EXPIRE ONE YEAR FROM THE DATE OF APPROVAL. IF THE PROJECT HAS NOT STARTED, UNLESS THE PERMIT HAS BEEN EXTENDED.

NOTE: MCDPS APPROVAL DOES NOT NEGATE THE NEED OF A MCDPS ACCESS PERMIT

Department of Environmental Protection — Montgomery County Maryland

MARK	DESCRIPTION	DATE	APPR.	MARK	DESCRIPTION	DATE	APPR.

MR. CRAIG CARSON 240-777-7713
MONTGOMERY COUNTY DEPARTMENT OF ENVIRONMENTAL PROTECTION
255 ROCKVILLE PIKE
ROCKVILLE, MD 20850

CPJ Associates

DESIGNED BY: BMP
DWN BY: AJD
SUBMITTED BY: JBB
CKD BY: JBB
DATE: JAN. 2014
TASK ORDER NO.: 13-01
CONTRACT NO.:
PLOT SCALE: 1"=20'
PLOT DATE: 1/20/2014
FILE NUMBER:
SIZE: ANSI D
FILE NAME: 01-EC-02-SHT-6.DWG

TASK ORDER 12-01
POTOMAC RIDGE SWM POND RETROFIT
(ASSET #10876) - NOT FOR CONSTRUCTION
DARNESTOWN (6TH) ELECTION DISTRICT
MONTGOMERY COUNTY, MARYLAND

DEMOLITION-EXISTING CONDITIONS PLAN

SHEET NO.
6 OF 12

EC-03

Attached Xrefs:

Last Saved 1/21/2014 Last Plotted 1/21/2014 9:24 AM Sheet N:\43030\DWG\01-EC-02-SHT-6

X:\43030\DWG\01-EC-02-SHT-6.dwg, 1/21/2014 9:24:55 AM, 1:1

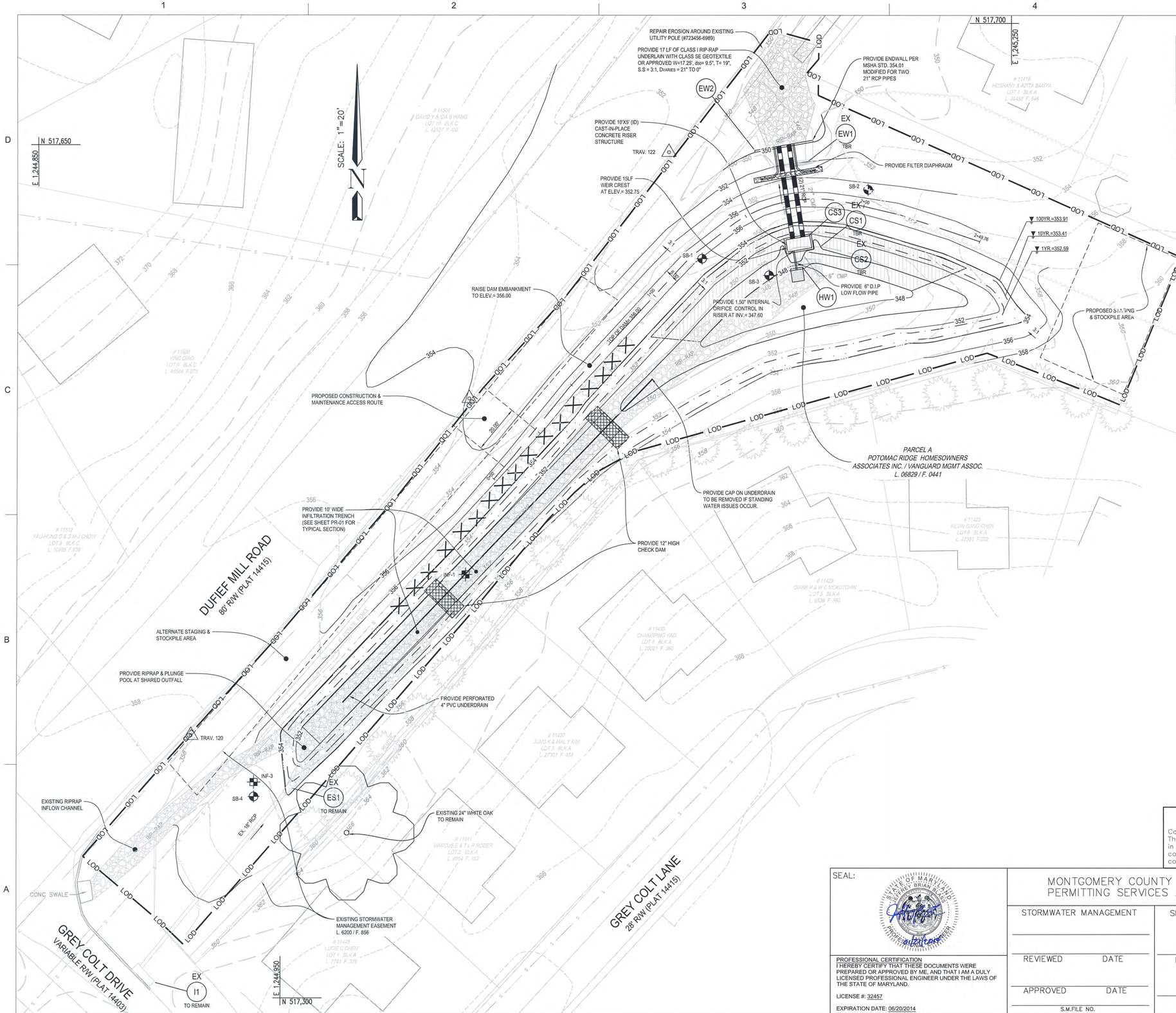

POND ROUTING ASSET # 10876			
FREQUENCY	PEAK DISCHARGE (cfs)		POND WSEL (ft)
	INFLOW	OUTFLOW	
1-YEAR	10.06	0.13	352.59
2-YEAR	15.38	1.01	352.80
10-YEAR	34.21	26.05	353.41
100-YEAR	56.43	48.58	353.91

SWM REQUIREMENT VS. PROVIDED CAPACITY			
DESCRIPTION	UNIT	REQUIRED	PROVIDED
WATER QUALITY STORAGE VOLUME	Ac-ft	0.16	0.05
CHANNEL PROTECTION VOLUME	Ac-ft	0.37	0.46
CHANNEL PROTECTION RELEASE RATE	cfs	0.13	0.13

POND DATA FOR ASSET # 10876	
DESCRIPTION	ELEVATION
POND BOTTOM	347.60
PERMANENT POOL	N/A
TOP OF DAM	356.00

GRAPHIC SCALE
20 0 10 20 40
SCALE: 1" = 20'

MISS UTILITY

Call "Miss Utility" at 1-800-257-7777, 48 hours prior to the start of work. The excavator must notify all public utility companies with underground facilities in the area of proposed excavation and have those facilities located by the utility companies prior to commencing excavation. The excavator is responsible for compliance with requirements of Chapter 36A of the Montgomery County Code.

SEAL:

STATE OF MARYLAND — STEPHEN BRIAN BLAND — No. 32457 — PROFESSIONAL ENGINEER

PROFESSIONAL CERTIFICATION
I THEREBY CERTIFY THAT THESE DOCUMENTS WERE PREPARED OR APPROVED BY ME, AND THAT I AM A DULY LICENSED PROFESSIONAL ENGINEER UNDER THE LAWS OF THE STATE OF MARYLAND.

LICENSE #: 32457

EXPIRATION DATE: 06/20/2014

MONTGOMERY COUNTY DEPARTMENT OF PERMITTING SERVICES APPROVED FOR:

STORMWATER MANAGEMENT
REVIEWED DATE
APPROVED DATE
S.M.FILE NO.

SEDIMENT CONTROL TECHNICAL REQUIREMENTS:
REVIEWED DATE
APPROVED DATE

NOTE: MCDPS APPROVAL DOES NOT NEGATE THE NEED OF A MCDPS ACCESS PERMIT

ADMINISTRATIVE REQUIREMENTS:
REVIEWED DATE
SEDIMENT CONTROL PERMIT NO.
MCDPS APPROVAL OF THIS PLAN WILL EXPIRE ONE YEAR FROM THE DATE OF APPROVAL. IF THE PROJECT HAS NOT STARTED, UNLESS THE PERMIT HAS BEEN EXTENDED.

Department of Environmental Protection — Montgomery County Maryland

MARK	DESCRIPTION	DATE	APPR.	MARK	DESCRIPTION	DATE	APPR.

MR. CRAIG CARSON 240-777-7713
MONTGOMERY COUNTY DEPARTMENT OF ENVIRONMENTAL PROTECTION
255 ROCKVILLE PIKE
ROCKVILLE, MD 20850

CPJ Associates

DESIGNED BY: BMF
DWN BY: ADG
CKD BY: JBB
SUBMITTED BY: JBB
DATE: JAN., 2014
TASK ORDER NO.: 12-01
CONTRACT NO.:
FILE NUMBER:
PLOT SCALE: AS SHOWN
PLOT DATE: 1/20/2014
ANSI D
FILENAME: 01-EC-02.DWG

TASK ORDER 12-01
POTOMAC RIDGE SWM POND RETROFIT
(ASSET #10876) - NOT FOR CONSTRUCTION
DARNESTOWN (6TH) ELECTION DISTRICT
MONTGOMERY COUNTY, MARYLAND

GRADING AND LAYOUT PLAN

SHEET NO.
7 OF 12

GR-01

Attached Xrefs:

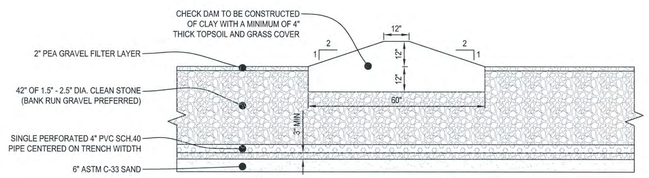

NOTE: PROVIDE MIRAFI 140N FILTER FABRIC ON SIDES OF SECTION ONLY

INFILTRATION TRENCH TYPICAL SECTION WITH CHECK DAM DETAIL

SCALE: 1" = 3'

WQv		
UNITS	REQUIRED	PROVIDED
Ac-ft	0.16	0.05

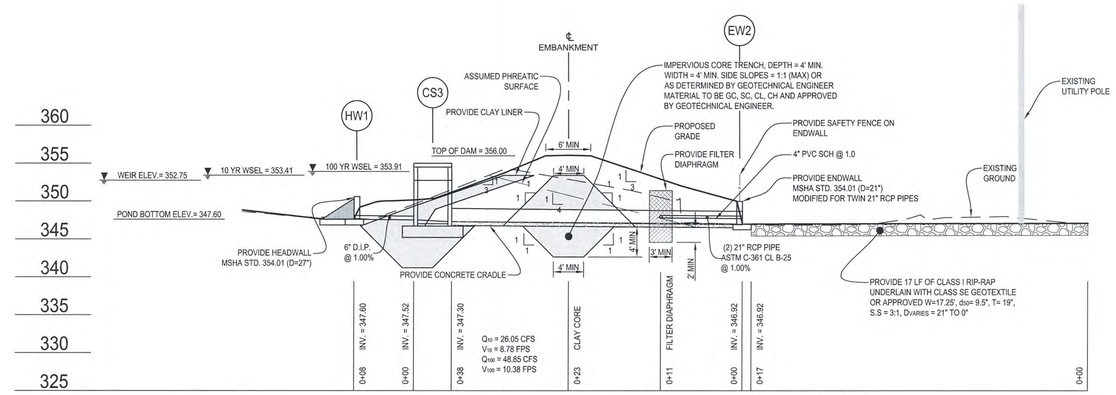

PROFILE SCALE
HORIZONTAL: 1"=10'
VERTICAL: 1"=10'

PROFILE ALONG CENTERLINE OF PRINCIPAL SPILLWAY

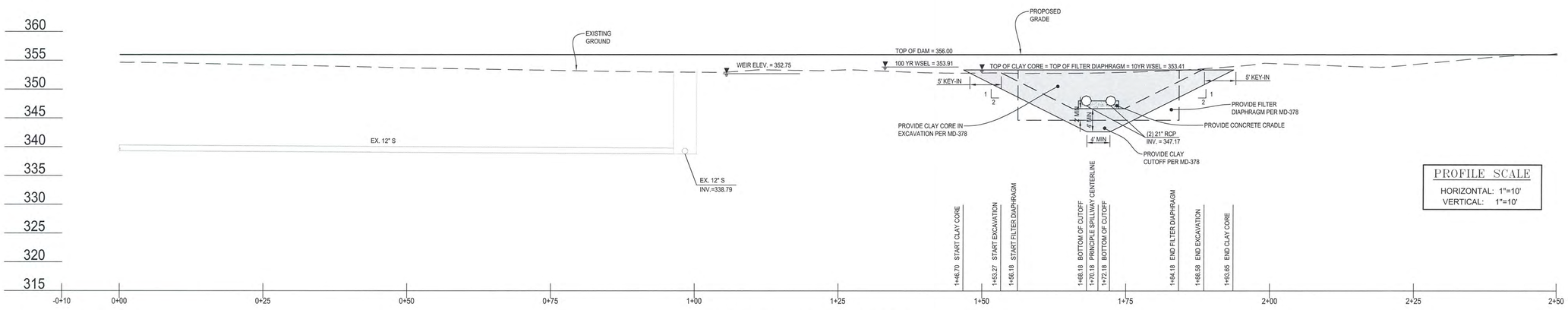

PROFILE SCALE
HORIZONTAL: 1"=10'
VERTICAL: 1"=10'

PROFILE ALONG CENTERLINE OF DAM

GRAPHIC SCALE
10 0 5 10 20
SCALE: 1" = 10'

MISS UTILITY

Call "Miss Utility" at 1-800-257-7777, 48 hours prior to the start of work. The excavator must notify all public utility companies with underground facilities in the area of proposed excavation and have those facilities located by the utility companies prior to commencing excavation. The excavator is responsible for compliance with requirements of Chapter 36A of the Montgomery County Code.

SEAL:

STATE OF MARYLAND — JEFFREY BRIAN BEAVER — No. 32457 — PROFESSIONAL ENGINEER

PROFESSIONAL CERTIFICATION
I HEREBY CERTIFY THAT THESE DOCUMENTS WERE PREPARED OR APPROVED BY ME, AND THAT I AM A DULY LICENSED PROFESSIONAL ENGINEER UNDER THE LAWS OF THE STATE OF MARYLAND.

LICENSE #: 32457

EXPIRATION DATE: 06/20/2014

MONTGOMERY COUNTY DEPARTMENT OF PERMITTING SERVICES APPROVED FOR:

STORMWATER MANAGEMENT	SEDIMENT CONTROL TECHNICAL REQUIREMENTS:	ADMINISTRATIVE REQUIREMENTS:
REVIEWED DATE	REVIEWED DATE	REVIEWED DATE
APPROVED DATE	APPROVED DATE	SEDIMENT CONTROL PERMIT NO.
S.M.FILE NO.		MCDPS APPROVAL OF THIS PLAN WILL EXPIRE ONE YEAR FROM THE DATE OF APPROVAL, IF THE PROJECT HAS NOT STARTED, UNLESS THE PERMIT HAS BEEN EXTENDED.

NOTE: MCDPS APPROVAL DOES NOT NEGATE THE NEED OF A MCDPS ACCESS PERMIT

Department of Environmental Protection — Montgomery County Maryland

MARK	DESCRIPTION	DATE	APPR.	MARK	DESCRIPTION	DATE	APPR.

DESIGNED BY: BW — DATE: JAN., 2014
DWN BY: ADG — CKD BY: JBB — TASK ORDER NO.: 12-01
SUBMITTED BY: JBB — CONTRACT NO.:
PLOT SCALE: AS-SHOWN — PLOT DATE: 1/20/2014 — FILE NUMBER:
SIZE: ANSI D — FILE NAME: 01-EC-02-PROFILES.DWG

MR. CRAIG CARSON 240-777-7713
MONTGOMERY COUNTY DEPARTMENT OF ENVIRONMENTAL PROTECTION
255 ROCKVILLE PIKE
ROCKVILLE, MD 20850

CPJ Associates

TASK ORDER 12-01
POTOMAC RIDGE SWM POND RETROFIT
(ASSET #10876) - NOT FOR CONSTRUCTION
DARNESTOWN (6TH) ELECTION DISTRICT
MONTGOMERY COUNTY, MARYLAND

PROFILES

SHEET NO.
8 OF 12

PR-01

Attached Xrefs:

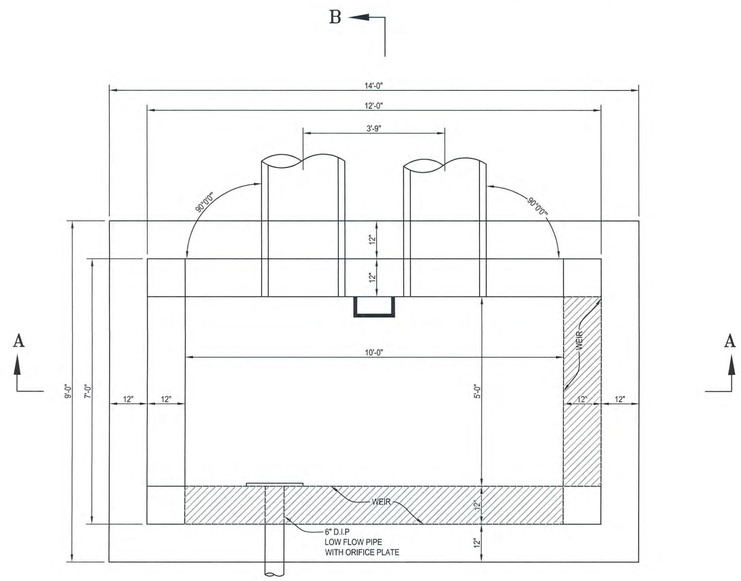

RISER DETAILS (TOP SLAB REMOVED)

SCALE: 1"=2'

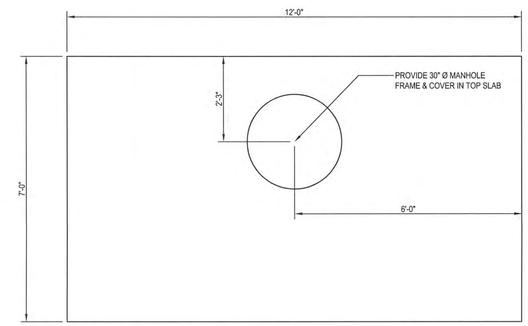

TOP SLAB

SCALE: 1"=2'

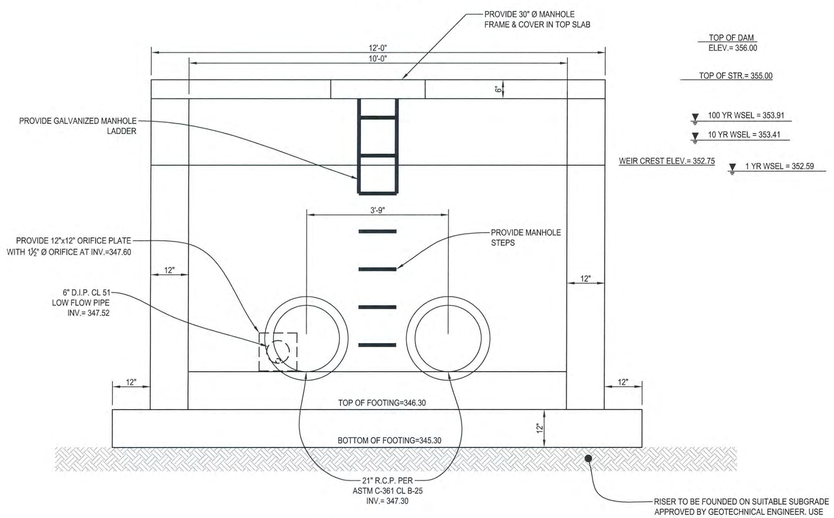

SECTION A-A

SCALE: 1"=2'

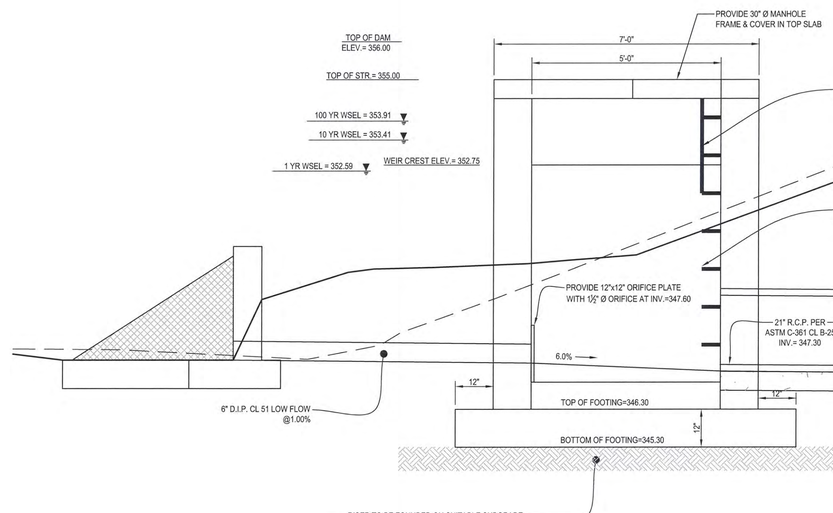

SECTION B-B

SCALE: 1"=2'

GRAPHIC SCALE

2 0 1 2 4

SCALE: 1" = 2'

MISS UTILITY

Call "Miss Utility" at 1-800-257-7777, 48 hours prior to the start of work. The excavator must notify all public utility companies with underground facilities in the area of proposed excavation and have those facilities located by the utility companies prior to commencing excavation. The excavator is responsible for compliance with requirements of Chapter 36A of the Montgomery County Code.

SEAL:

STATE OF MARYLAND
JEFFREY BRIAN BLOOM
No. 32457
PROFESSIONAL ENGINEER

PROFESSIONAL CERTIFICATION
I HEREBY CERTIFY THAT THESE DOCUMENTS WERE PREPARED OR APPROVED BY ME, AND THAT I AM A DULY LICENSED PROFESSIONAL ENGINEER UNDER THE LAWS OF THE STATE OF MARYLAND.

LICENSE #: 32457

EXPIRATION DATE: 06/20/2014

MONTGOMERY COUNTY DEPARTMENT OF PERMITTING SERVICES APPROVED FOR:

STORMWATER MANAGEMENT

REVIEWED DATE

APPROVED DATE

SEDIMENT CONTROL TECHNICAL REQUIREMENTS:

REVIEWED DATE

APPROVED DATE

S.M.FILE NO.

NOTE: MCDPS APPROVAL DOES NOT NEGATE THE NEED OF A MCDPS ACCESS PERMIT

ADMINISTRATIVE REQUIREMENTS:

REVIEWED DATE

SEDIMENT CONTROL PERMIT NO.

MCDPS APPROVAL OF THIS PLAN WILL EXPIRE ONE YEAR FROM THE DATE OF APPROVAL. IF THE PROJECT HAS NOT STARTED, UNLESS THE PERMIT HAS BEEN EXTENDED.

Department of Environmental Protection
Montgomery County Maryland

MARK	DESCRIPTION	DATE	APPR.	MARK	DESCRIPTION	DATE	APPR.

MR.CRAIG CARSON 240-777-7713
MONTGOMERY COUNTY DEPARTMENT OF ENVIRONMENTAL PROTECTION
255 ROCKVILLE PIKE
ROCKVILLE, MD 20850

CPJ Associates

DESIGNED BY: BLUE WATER
DWN BY: ADG
CKD BY: JBB
SUBMITTED BY: JBB
DATE: JAN. 2014
TASK ORDER NO.: 12-01
CONTRACT NO.:
FILE NUMBER:
PLOT SCALE: 1"=2'
PLOT DATE: 1/20/2014
SIZE: ANSI D
FILE NAME: 01-EC-02.DWG

TASK ORDER 12-01
POTOMAC RIDGE SWM POND RETROFIT
(ASSET #10875) NOT FOR CONSTRUCTION
DARNESTOWN (6TH) ELECTION DISTRICT
MONTGOMERY COUNTY, MARYLAND

RISER DETAILS

SHEET NO.
8 OF 12

PR-02

Attached Xrefs:

Last Saved 1/21/2014 Last Plotted 1/21/2014 11:47 AM Sheet N:\43030\DWG\01-EC-02

BORING NUMBER INF-1

KIM ENGINEERING, INC.
Consulting Geotechnical Engineers
Silver Spring, Maryland

PAGE 1 OF 1

CLIENT: Charles P. Johnson & Associates, Inc.
PROJECT NAME: Site #2 Muddy Branch Potomac Ridge WRE 12-01
PROJECT NUMBER: G13060BC
PROJECT LOCATION: Grey Colt Drive, Gaithersburg, MD 20878
DATE STARTED: 7/24/13 COMPLETED: 7/24/13
GROUND ELEVATION: HOLE SIZE: 6 inches
DRILLING CONTRACTOR: K.E.I.
GROUND WATER LEVELS:
DRILLING METHOD: solid stem auger
AT TIME OF DRILLING: ▽ 8.00 ft Cave-in at depth 8.33 feet
LOGGED BY: Yonas CHECKED BY: RON
AT END OF DRILLING: ---
NOTES:
AFTER DRILLING: ---

DEPTH (ft)	GRAPHIC LOG	MATERIAL DESCRIPTION	SAMPLE TYPE NUMBER	RECOVERY % (RQD)	BLOW COUNTS (N VALUE)	POCKET PEN. (tsf)	DRY UNIT WT. (pcf)	▲ SPT N VALUE ▲ 20 40 60 80	Pl MC LL	☐ FINES CONTENT (%) ☐ 20 40 60 80
0.0		Topsoil at 5 inches								
2.5		Red, moist, loose, sandy SILT (ML) with clay (FILL)	SS 1	83	3-3-4 (7)					
5.0		Red, moist, medium dense, silty SAND (SM) with clay (FILL)	SS 2	78	5-6-8 (10)					
7.5		Brown, moist, loose, silty SAND (SM) (FILL)	SS 3	67	3-4-6 (10)					
10.0		Mottled tan consisting of black, moist, medium dense, silty SAND (SM) (FILL)	SS 4	89	6-6-6 (12)					

Bottom of borehole at 10.0 feet.

BORING NUMBER SB-1

KIM ENGINEERING, INC.
Consulting Geotechnical Engineers
Silver Spring, Maryland

PAGE 1 OF 1

CLIENT: Charles P. Johnson & Associates, Inc.
PROJECT NAME: Site #2 Muddy Branch Potomac Ridge WRE 12-01
PROJECT NUMBER: G13060BC
PROJECT LOCATION: Grey Colt Drive, Gaithersburg, MD 20878
DATE STARTED: 7/24/13 COMPLETED: 7/24/13
GROUND ELEVATION: HOLE SIZE: 6 inches
DRILLING CONTRACTOR: K.E.I.
GROUND WATER LEVELS:
DRILLING METHOD: solid stem auger
AT TIME OF DRILLING: ---
LOGGED BY: Yonas CHECKED BY: RON
AT END OF DRILLING: ---
NOTES:
AFTER DRILLING: ---

DEPTH (ft)	GRAPHIC LOG	MATERIAL DESCRIPTION	SAMPLE TYPE NUMBER	RECOVERY % (RQD)	BLOW COUNTS (N VALUE)	POCKET PEN. (tsf)	DRY UNIT WT. (pcf)	▲ SPT N VALUE ▲ 20 40 60 80	Pl MC LL	☐ FINES CONTENT (%) ☐ 20 40 60 80
0.0		Topsoil at 3 inches								
2.5		Red, moist, loose, silty SAND (SM) with some clay (FILL)	SS 1	56	3-3-3 (6)					
5.0		Red, moist, loose, silty SAND (SM) with some clay (FILL)	SS 2	78	3-4-5 (9)					
7.5		Brown, moist, medium dense, silty SAND (SM) (FILL)	SS 3	83	5-5-6 (11)					
10.0		Brown with mottled red, moist, loose, fine silty SAND (SM) (FILL)	SS 4	111	4-4-6 (10)					
12.5		Mottled tan, moist, medium dense, micaceous silty SAND (SM)	SS 5	67	6-6-6 (12)					

Bottom of borehole at 15.0 feet.

BORING NUMBER SB-2

KIM ENGINEERING, INC.
Consulting Geotechnical Engineers
Silver Spring, Maryland

PAGE 1 OF 1

CLIENT: Charles P. Johnson & Associates, Inc.
PROJECT NAME: Site #2 Muddy Branch Potomac Ridge WRE 12-01
PROJECT NUMBER: G13060BC
PROJECT LOCATION: Grey Colt Drive, Gaithersburg, MD 20878
DATE STARTED: 7/24/13 COMPLETED: 7/24/13
GROUND ELEVATION: HOLE SIZE: 6 inches
DRILLING CONTRACTOR: K.E.I.
GROUND WATER LEVELS:
DRILLING METHOD: solid stem auger
AT TIME OF DRILLING: ---
LOGGED BY: Yonas CHECKED BY: RON
AT END OF DRILLING: ---
NOTES:
AFTER DRILLING: ---

DEPTH (ft)	GRAPHIC LOG	MATERIAL DESCRIPTION	SAMPLE TYPE NUMBER	RECOVERY % (RQD)	BLOW COUNTS (N VALUE)	POCKET PEN. (tsf)	DRY UNIT WT. (pcf)	▲ SPT N VALUE ▲ 20 40 60 80	Pl MC LL	☐ FINES CONTENT (%) ☐ 20 40 60 80
0.0		Topsoil at 3 inches								
2.5		Red, moist, medium dense, sandy SILT (M_L) with some gravel (FILL)	SS 1	67	4-6-6 (12)					
5.0		Red, moist, loose, sandy SILT (M_L) with clay (FILL)	SS 2	72	3-5-5 (10)					
7.5		Mottled red, moist, dense, micaceous silt SAND (SM) (FILL)	SS 3	56	3-5-6 (11)					
10.0		Brown, moist, medium dense, silty SAND (SM) with clay (FILL)	SS 4	83	5-6-7 (13)					
12.5		Light brown, moist, dense, silt SAND (SM) (FILL)	SS 5	50	4-4-5 (9)					

Bottom of borehole at 15.0 feet.

BORING NUMBER SB-3

KIM ENGINEERING, INC.
Consulting Geotechnical Engineers
Silver Spring, Maryland

PAGE 1 OF 1

CLIENT: Charles P. Johnson & Associates, Inc.
PROJECT NAME: Site #2 Muddy Branch Potomac Ridge WRE 12-01
PROJECT NUMBER: G13060BC
PROJECT LOCATION: Grey Colt Drive, Gaithersburg, MD 20878
DATE STARTED: 7/24/13 COMPLETED: 7/24/13
GROUND ELEVATION: HOLE SIZE: 6 inches
DRILLING CONTRACTOR: K.E.I.
GROUND WATER LEVELS:
DRILLING METHOD: solid stem auger
AT TIME OF DRILLING: ---
LOGGED BY: Yonas CHECKED BY: RON
AT END OF DRILLING: ---
NOTES:
AFTER DRILLING: ---

DEPTH (ft)	GRAPHIC LOG	MATERIAL DESCRIPTION	SAMPLE TYPE NUMBER	RECOVERY % (RQD)	BLOW COUNTS (N VALUE)	POCKET PEN. (tsf)	DRY UNIT WT. (pcf)	▲ SPT N VALUE ▲ 20 40 60 80	Pl MC LL	☐ FINES CONTENT (%) ☐ 20 40 60 80
0.0		Topsoil at 3 inches								
2.5		Red, moist, loose, silty SAND (SM) with clay (FILL)	SS 1	89	3-3-5 (8)					
5.0		Brown, moist, loose, silty SAND (SM) with clay (FILL)	SS 2	72	5-3-4 (7)					
7.5		Light brown consisting of mottled black, moist, micaceous silty SAND (SM) (FILL)	SS 3	67	4-5-5 (10)					
10.0		Mottled tan, moist, loose, silty SAND (SM) with quartz gravel (FILL)	SS 4	78	4-6-4 (10)					

Bottom of borehole at 10.0 feet.

BORING NUMBER SB-4

KIM ENGINEERING, INC.
Consulting Geotechnical Engineers
Silver Spring, Maryland

PAGE 1 OF 1

CLIENT: Charles P. Johnson & Associates, Inc.
PROJECT NAME: Site #2 Muddy Branch Potomac Ridge WRE 12-01
PROJECT NUMBER: G13060BC
PROJECT LOCATION: Grey Colt Drive, Gaithersburg, MD 20878
DATE STARTED: 7/24/13 COMPLETED: 7/24/13
GROUND ELEVATION: HOLE SIZE: 6 inches
DRILLING CONTRACTOR: K.E.I.
GROUND WATER LEVELS:
DRILLING METHOD: solid stem auger
AT TIME OF DRILLING: ---
LOGGED BY: Yonas CHECKED BY: RON
AT END OF DRILLING: ---
NOTES:
AFTER DRILLING: ---

DEPTH (ft)	GRAPHIC LOG	MATERIAL DESCRIPTION	SAMPLE TYPE NUMBER	RECOVERY % (RQD)	BLOW COUNTS (N VALUE)	POCKET PEN. (tsf)	DRY UNIT WT. (pcf)	▲ SPT N VALUE ▲ 20 40 60 80	Pl MC LL	☐ FINES CONTENT (%) ☐ 20 40 60 80
0.0		Topsoil at 3 inches								
2.5		mottled tan, moist, medium dense, silty SAND (SM) with clay (FILL)	SS 1	72	4-6-6 (12)					
5.0		light brown, moist, loose, silty SAND (SM) with some clay (FILL)	SS 2	89	3-5-6 (11)					
7.5		light brown, moist, medium dense, silty SAND (SM) (FILL)	SS 3	83	5-7-5 (12)					
10.0			SS 4	72	6-7-9 (16)					
12.5										
15.0		tan, moist, medium dense, fine silty SAND (SM)	SS 5	83	5-10-14 (24)					

Bottom of borehole at 15.0 feet.

GRAPHIC SCALE
30 0 15 30 60
SCALE: 1" = 30'

MISS UTILITY

Call "Miss Utility" at 1-800-257-7777, 48 hours prior to the start of work. The excavator must notify all public utility companies with underground facilities in the area of proposed excavation and have those facilities located by the utility companies prior to commencing excavation. The excavator is responsible for compliance with requirements of Chapter 36A of the Montgomery County Code.

SEAL:

STATE OF MARYLAND
JEFFREY BRIAN BLASER
PROFESSIONAL ENGINEER

PROFESSIONAL CERTIFICATION
I HEREBY CERTIFY THAT THESE DOCUMENTS WERE PREPARED OR APPROVED BY ME, AND THAT I AM A DULY LICENSED PROFESSIONAL ENGINEER UNDER THE LAWS OF THE STATE OF MARYLAND.

LICENSE #: 32457

EXPIRATION DATE: 06/20/2014

MONTGOMERY COUNTY DEPARTMENT OF PERMITTING SERVICES APPROVED FOR:

STORMWATER MANAGEMENT
REVIEWED DATE
APPROVED DATE
S.M.FILE NO.

SEDIMENT CONTROL TECHNICAL REQUIREMENTS:
REVIEWED DATE
APPROVED DATE

NOTE: MCDPS APPROVAL DOES NOT NEGATE THE NEED OF A MCDPS ACCESS PERMIT

ADMINISTRATIVE REQUIREMENTS:
REVIEWED DATE
SEDIMENT CONTROL PERMIT NO.

MCDPS APPROVAL OF THIS PLAN WILL EXPIRE ONE YEAR FROM THE DATE OF APPROVAL. IF THE PROJECT HAS NOT STARTED, UNLESS THE PERMIT HAS BEEN EXTENDED.

Department of Environmental Protection
Montgomery County Maryland

MARK	DESCRIPTION	DATE	APPR.	MARK	DESCRIPTION	DATE	APPR.

DESIGNED BY: DWN BY: ADCS
CKD BY: JBB
SUBMITTED BY: JBB
DATE: JAN. 2014
TASK ORDER NO.: 12-01
CONTRACT NO.:
PLOT SCALE: 1"=30'
PLOT DATE: 1/20/2014
FILE NUMBER:
SIZE: ANSI D
FILE NAME: 01-EC-02.DWG

MR.CRAIG CARSON 240-777-7713
MONTGOMERY COUNTY DEPARTMENT OF ENVIRONMENTAL PROTECTION
255 ROCKVILLE PIKE
ROCKVILLE, MD 20850

CPJ Associates

TASK ORDER 12-01
POTOMAC RIDGE SWM POND RETROFIT
(ASSET #14070) LOT 1 OF CONSTRUCTION
DARNESTOWN (6TH) ELECTION DISTRICT
MONTGOMERY COUNTY, MARYLAND

SOIL BORING LOGS

SHEET NO.
10 OF 12

SB-01

Attached XrefS:

Last Saved 1/21/2014 Last Plotted 1/21/2014 11:47 AM Sheet N:\43030\DWG\01-EC-02

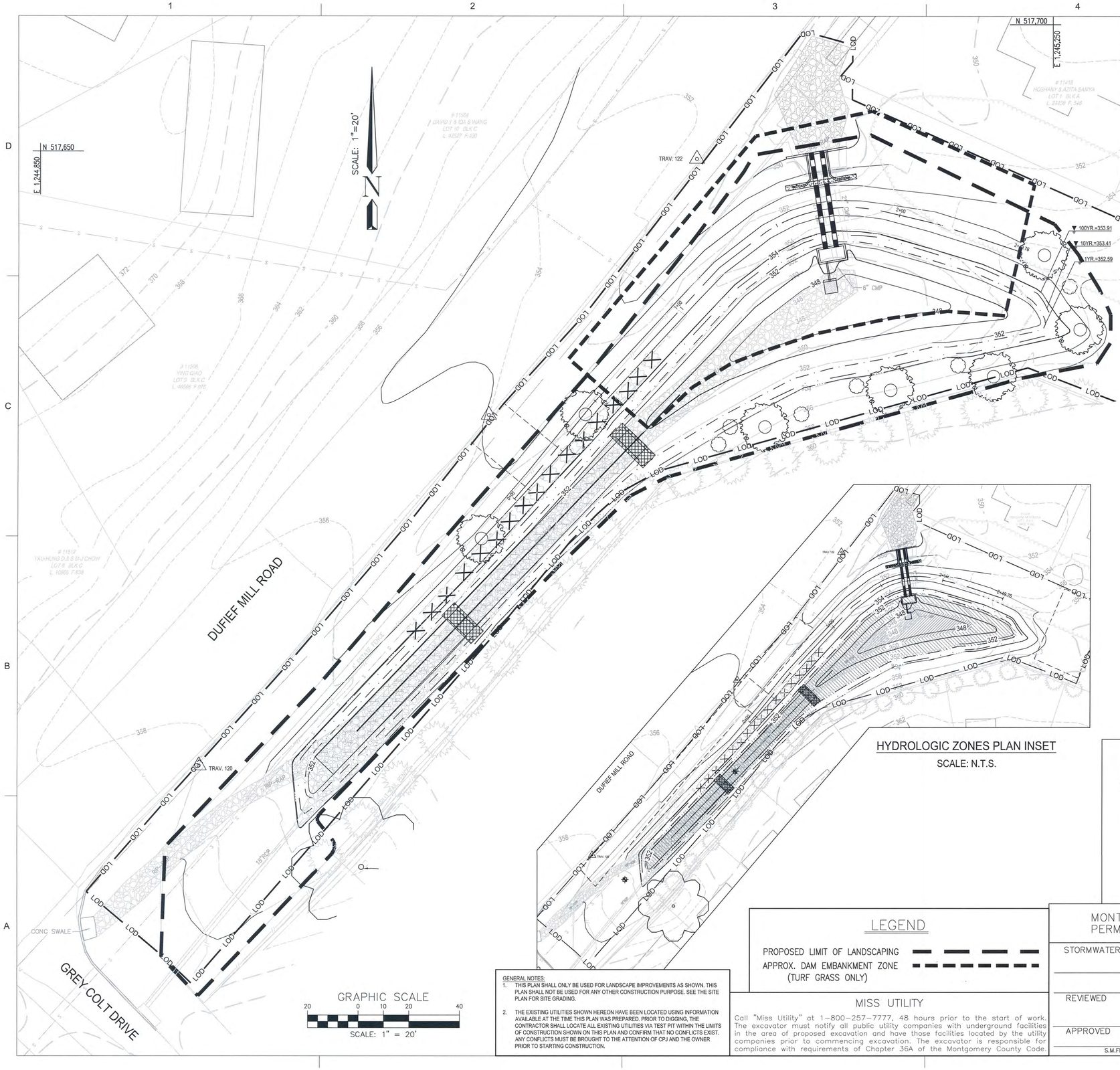

HYDROLOGIC ZONES PLAN INSET

SCALE: N.T.S.

PLANTING SCHEDULE						
KeyCode	Qty	Botanical Name	Common Name	Size/Cond. at Planting	Remarks	Zone(s)
CANOPY TREES*, UNDERSTORY TREES						
AR		Acer rubrum	Red Maple			2,3,4,5
CC		Carpinus caroliniana	American Hornbeam			3,4,5
NS		Nyssa sylvatica	Black Gum			3,4
QA		Quercus alba	White Oak			3,4,5
QB		Quercus bicolor	Swamp White Oak			2,3,4,5
QP		Quercus phellos	Willow Oak			3,4,5
Shrubs						
CO		Cephalanthus occidentalis	Buttonbush			2,3
LB		Lindera benzoin	Spicebush			3,4
IV		Ilex verticillata 'Winter Gem'	Winter Gem Winterberry			3,4,5
VD		Viburnum dentatum	Arrowhead Viburnum			3,4
VP		Viburnum prunifolium	Cranberrybush Vinbumum			3,4
* All "Trees" shall have straight, non bowing, or irregular trunks and leaders and be uniformly branched out with vibrant well developed root systems.						
Forbs (Aquatic emergents)						
AI		Aesclepias incarnata	Swamp Milkweed			3
AP		Aster puniceus	Purplestem Aster			2,3
CC		Carex comosa	bristly sedge			2,3
IVE		iris versicolor	ble flag			2,3
JE		Juncus effusus	Soft Rush			2,3
PC		Pontederia cordata	Pickerelweed			2
Forbes Sedges						
PP		Polygonum pensylvanicum	Pennsylvania Smartweed			3
RL		Rudbeckia laciniata	Cutleaf Coneflower			3
SR		Soliago rugosa	Wrinkleleaf Goldenrod			3
CP		Carex pennsylvanica	Pennsylvanis Sedge			3

HYDROLOGIC ZONES		
ZONE	ZONE DESCRIPTION	HYDROLOGIC CONDITIONS
1	DEEP WATER POOL	1'-6' DEPTH BELOW NORMAL POOL ELEVATION
2	SHALLOW WATER BENCH (LOW MARSH)	0"-12" DEPTH BELOW NORMAL POOL ELEVATION
3	SHORELINE FRINGE (HIGH MARSH)	0"-12" ELEVATION ABOVE NORMAL POOL (REGULARLY INUNDATED)
4	RIPARIAN FRINGE	1'-4' ELEVATION ABOVE NORMAL POOL (PERIODICALLY INUNDATED)
5	FLOODPLAIN TERRACE	2YR TO 10YR WATER SURFACE ELEVATION (INFREQUENTLY INUNDATED)
6	UPLAND SLOPES	100YR WATER SURFACE ELEVATION AND ABOVE (SELDOM/NEVER INUNDATED)

NOTES:

1. Plant list categories reflect the primary zone each plant will tolerate. Some plants have ranges that include several zones. See planting plan for actual limits of all plant materials.
2. All areas within the LOD not receiving other specified plant material shall be seeded with the turfgrass seed mix, see specifications on Planting Plan(s).
3. Seed quantities, percentages and mixes are based on pure live seed.
4. The embankment area shall be cleared of all woody vegetation. The embankment shall remain free of woody vegetation through appropriate maintenance and regular mowing.

LEGEND

SHADE TREE

SHRUBS

HERBACEOUS/AQUATIC EMERGENTS, FORBES

LEGEND

PROPOSED LIMIT OF LANDSCAPING

APPROX. DAM EMBANKMENT ZONE (TURF GRASS ONLY)

MISS UTILITY

Call "Miss Utility" at 1-800-257-7777, 48 hours prior to the start of work. The excavator must notify all public utility companies with underground facilities in the area of proposed excavation and have those facilities located by the utility companies prior to commencing excavation. The excavator is responsible for compliance with requirements of Chapter 36A of the Montgomery County Code.

GENERAL NOTES:

1. THIS PLAN SHALL ONLY BE USED FOR LANDSCAPE IMPROVEMENTS AS SHOWN. THIS PLAN SHALL NOT BE USED FOR ANY OTHER CONSTRUCTION PURPOSE. SEE THE SITE PLAN FOR SITE GRADING.
2. THE EXISTING UTILITIES SHOWN HEREON HAVE BEEN LOCATED USING INFORMATION AVAILABLE AT THE TIME THIS PLAN WAS PREPARED. PRIOR TO DIGGING, THE CONTRACTOR SHALL LOCATE ALL EXISTING UTILITIES VIA TEST PIT WITHIN THE LIMITS OF CONSTRUCTION SHOWN ON THIS PLAN AND CONFIRM THAT NO CONFLICTS EXIST. ANY CONFLICTS MUST BE BROUGHT TO THE ATTENTION OF CPJ AND THE OWNER PRIOR TO STARTING CONSTRUCTION.

MONTGOMERY COUNTY DEPARTMENT OF PERMITTING SERVICES APPROVED FOR:

STORMWATER MANAGEMENT

REVIEWED DATE

APPROVED DATE

S.M.FILE NO.

SEDIMENT CONTROL TECHNICAL REQUIREMENTS:

REVIEWED DATE

APPROVED DATE

NOTE: MCDPS APPROVAL DOES NOT NEGATE THE NEED OF A MCDPS ACCESS PERMIT

ADMINISTRATIVE REQUIREMENTS:

REVIEWED DATE

SEDIMENT CONTROL PERMIT NO.

MCDPS APPROVAL OF THIS PLAN WILL EXPIRE ONE YEAR FROM THE DATE OF APPROVAL IF THE PROJECT HAS NOT STARTED, UNLESS THE PERMIT HAS BEEN EXTENDED.

LANDSCAPE ARCHITECT CERTIFICATE

I HEREBY CERTIFY THAT THE INFORMATION SHOWN HEREON IS CORRECT AND TAKEN FROM AVAILABLE PLANS AND RECORDS.

STATE OF MARYLAND · ERIC JOHN STURM · 755 · LICENSED LANDSCAPE ARCHITECT

DATE

ERIC J. STURM
REGISTERED LANDSCAPE ARCHITECT MD. # 755

Department of Environmental Protection
Montgomery County Maryland

MARK	DESCRIPTION	DATE	APPR.	MARK	DESCRIPTION	DATE	APPR.

DESIGNED BY: JBB | DATE: JAN. 2014
DWN BY: ADG | CKD BY: JBB | TASK ORDER NO.: 12-01
SUBMITTED BY: JBB | CONTRACT NO.:
PLOT SCALE: 1"=20' | PLOT DATE: 1/20/2014 | FILE NUMBER:
SIZE: ANSI D | FILE NAME: 01-EC-02.DWG

MR.CRAIG CARSON 240-777-7713
MONTGOMERY COUNTY DEPARTMENT OF ENVIRONMENTAL PROTECTION
255 ROCKVILLE PIKE
ROCKVILLE, MD 20850

CPJ Associates

TASK ORDER 12-01
POTOMAC RIDGE SWM POND RETROFIT
(ASSET #10910) WITH CONSTRUCTION
DARNESTOWN (6TH) ELECTION DISTRICT
MONTGOMERY COUNTY, MARYLAND

LANDSCAPE PLAN

SHEET NO.
11 OF 12

LP-01

Attached Xrefs:

Last Saved 1/21/2014 Last Plotted 1/21/2014 11:47 AM Sheet N:\43030\DWG\01-EC-02

GENERAL PLANTING NOTES

1. ALL PLANT MATERIAL SHALL CONFORM TO THE SIZES GIVEN IN THE PLANT LIST AND SHALL BE NURSERY GROWN IN ACCORDANCE WITH THE "AMERICAN STANDARD FOR NURSERY STOCK," ANSI Z60.1, LATEST EDITION.
2. ALL PLANTING SHALL BE IN ACCORDANCE WITH STANDARD AMERICAN ASSOCIATION OF NURSERYMEN PROCEDURES AND SPECIFICATIONS.
3. CONTRACTOR AND OWNER'S REPRESENTATIVE SHALL VERIFY THE CORRECT LOCATION OF ALL UNDERGROUND UTILITIES IN THE FIELD PRIOR TO INSTALLATION OF ANY PLANT MATERIALS.
4. PLANT MATERIAL LOCATION TO BE STAKED IN THE FIELD AND APPROVED BY THE LANDSCAPE ARCHITECT PRIOR TO PLANTING.
5. ALL PLANT BEDS AND PLANTING AREAS TO BE MULCHED TO A DEPTH OF 2" SHREDDED HARDWOOD BARK UNLESS OTHERWISE NOTED ON DRAWINGS OR SPECIFICATIONS.
6. ALL AREAS DISTURBED BY PLANTING OPERATIONS SHALL BE FINE GRADED AND SEEDED
7. OBTAIN APPROVAL FROM OWNER'S REPRESENTATIVE BEFORE MAKING ANY SUBSTITUTIONS OR CHANGES
8. ALL PLANT BEDS SHALL BE CONTAINED WITH A SPADED EDGE UNLESS OTHERWISE NOTED ON DRAWINGS
9. QUANTITIES SHOWN ON PLANT LIST ARE FOR THE CONTRACTORS CONVENIENCE ONLY AND ARE NOT GUARANTEED TO BE ACCURATE. IN THE EVENT OF A DISCREPANCY BETWEEN QUANTITIES SHOWN ON THE PLAN AND QUANTITIES SHOWN ON THE PLANT LIST, THE QUANTITIES ON THE PLAN SHALL APPLY.
10. THIS PLAN HAS BEEN PREPARED IN ACCORDANCE WITH THE PROVISIONS OF MONTGOMERY COUNTY, MARYLAND.
11. CONTRACTOR IS TO PROVIDE ALL MATERIALS AND LABOR INCLUDING PLANTS, PLANTER FILL MATERIALS, MULCHES, SOIL PREPARATION, DECORATIVE ITEMS, INSPECTION, AND TRANSPORTATION.
12. TOPSOIL TO A DEPTH OF 4" IN ALL AREAS TO BE SEEDED OR SODDED
13. EACH PLANTING BED AREA IS TO RECEIVE A MINIMUM OF 6" OF PREPARED SOIL CULTIVATED TO A 12" DEPTH. PREPARED SOIL SHALL BE MIXED AS FOLLOWS: 2/3 SANDY LOAM TOPSOIL FREE OF ROOTS, ROCKS, WEEDS, AND OTHER DEBRIS AND 1/3 PEAT MOSS OR APPROVED ORGANIC MULCH.
14. SOIL ADDITIVES TO BE GRANULAR FERTILIZER OF A 1:2:1 RATIO. SOIL OUTSIDE RANGE OF 5.0 - 7.0 pH SHALL BE TREATED APPROPRIATELY TO CORRECT FOR HIGH ALKALINITY OR ACIDITY.
15. THE USE OF ON-SITE TOPSOIL MUST BE APPROVED IN ADVANCE BY LANDSCAPE ARCHITECT.
16. SODDED AND SEEDED AREAS SHALL BE PROPERLY PREPARED, FINISH GRADED AND HAND ROLLED PRIOR TO SOD PLACEMENT OR SEEDING. SEEDED AREAS SHALL BE RE-SEEDED AS NECESSARY TO PROVIDE AN EVEN STAND OF SPECIFIED PLANTINGS.
17. TOPSOIL MOVED DURING THE COURSE OF CONSTRUCTION SHALL BE REDISTRIBUTED ON ALL REGRADED SURFACES PROVIDING A MINIMUM OF 4" OF EVEN COVER TO ALL DISTURBED AREAS. SUCH AREAS SHALL BE STABILIZED THROUGH SEEDING AS SHOWN.

AREAS TO BE TOP DRESSED

A. PRIOR TO ALL SOIL PREPARATION WORK, ALL CONSTRUCTION AND PLANTING IN THE AREA SHALL HAVE BEEN COMPLETED.

B. CLEARING: PRIOR TO APPLICATION OF TOP DRESS MATERIAL, THE GROUND SURFACE SHALL BE WELL DRAINED AND CLEAR OF ALL DEBRIS OR ANY OTHER MATERIAL WHICH MAY HINDER THE PROPER APPLICATION OF SUBSEQUENT MAINTENANCE OPERATIONS.

C. PRECAUTIONS: DO NOT WORK SOIL WHILE FROZEN OR WET. DO NOT WORK SOIL IN A DUSTY CONDITION, BUT MOISTEN TO PREVENT A DUST NUISANCE.

D. AERATE ALL THE TOP DRESSED AREAS, USING A CORE REMOVING AERATOR.

E. ANY BARE AREAS LARGER THAN 1 SQ. FT. SHOULD BE RESTORED TO FINISHED GRADE WITH SCREENED COMPOSTED SEWAGE SLUDGE OR FINE GRADE TOPSOIL (SUBMIT SAMPLE FOR APPROVAL). USE EQUIPMENT AND METHODS COMMON TO SUCH WORK AND TILL SOIL TO THOROUGHLY INCORPORATE THE SCREENED COMPOSTED SLUDGE INTO EXISTING SOIL.

F. FERTILIZER: FOLLOWING THE AERATION PROCESS, APPLY A STARTER FERTILIZER EVENLY AT THE RATE OF 1 CY/1000 SQ. FT. INTO THE TOP 2 INCHES OF SOIL BY CROSS DISKING OR OTHER APPROPRIATE METHOD.

G. SOW SEED ONLY AFTER THE SCREENED SOIL AMENDMENT AND FERTILIZER HAVE BEEN APPLIED AND THOROUGHLY SETTLED BY RAINFALL OR WATERING. OVERSEED LAWN AREAS EVENLY AT A RATE OF 2 LBS/1000 SQ. FT. SEED WITH EQUIPMENT THAT PROVIDES A MULTI-DIRECTIONAL SEEDING PATTERN TO ENSURE PROPER SEEDING RATE AND UNIFORMITY OF SEEDING.

H. MULCHING: AFTER SEEDING, COVER BARE AREAS THAT HAVE BEEN REPAIRED WITH CLEAN WHEAT STRAW. A MINIMUM OF 50% OF THE SOIL SURFACE SHALL BE COVERED UNTIL GERMINATION HAS OCCURRED.

SHA TURFGRASS SEED MIX		
MIX %	SPECIES	
	Common Name	Scientific Name
90	tall fescue	*Schedonorus phoenix* (Scop.) Holub
5	Kentucky bluegrass	*Poa pratensis* L. ssp. *pratensis*
5	perennial ryegrass	*Lolium perenne* L. ssp. *perenne*

SEEDING SEASONS AND SEED MIXES				
REGION	SEEDING SEASON - MONTH/DAY			
	Spring	Summer	Fall	Late Fall
	SHA Turfgrass Seed Mix			
1	4/1 to 6/15	6/16 to 7/31	8/1 to 10/1	10/2 to 11/1
2	3/1 to 5/15	5/16 to 7/31	8/1 to 10/20	10/21 to 11/20
3	3/1 to 5/1	5/2 to 7/31	8/1 to 10/31	11/1 to 11/30
1, 2, and 3	–	Plus Additive A or B	–	Plus Additive C
	Plus Additive D when seeding: • Areas 30 ft and greater from the pavement edge • Slopes 4:1 and steeper			
	When seeding areas within 4 miles of a State airport: Areas flatter than 4:1 - Use no Additives. Slopes 4:1 and steeper - Use SHA Special Purpose Seed Mix in lieu of SHA Turfgrass Seed Mix			
	Additives: A = Weeping Lovegrass; B = Foxtail Bristlegrass; C = SHA Temporary Seed Mix; D = Sericea Lespedeza			

Follow Maryland State Highway Administration specifications and guidelines for turfgrass establishment and seed applications.

TURFGRASS SEED DETAILS

NOT TO SCALE

NOTES:
-FOR CONTAINER SHRUBS, COMPLETELY REMOVE ALL NON-BIODEGRADABLE CONTAINERS AND SCARIFY ROOT BALL

-FOR B&B SHRUBS, CUT AND REMOVE METAL CAGE, TWINE, BURLAP CAN REMAIN

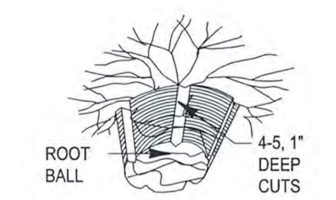

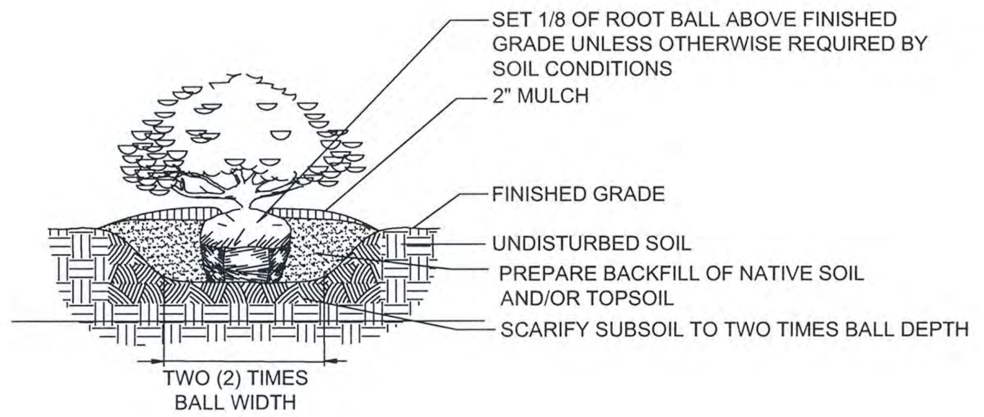

SHRUB PLANTING DETAIL

NOT TO SCALE

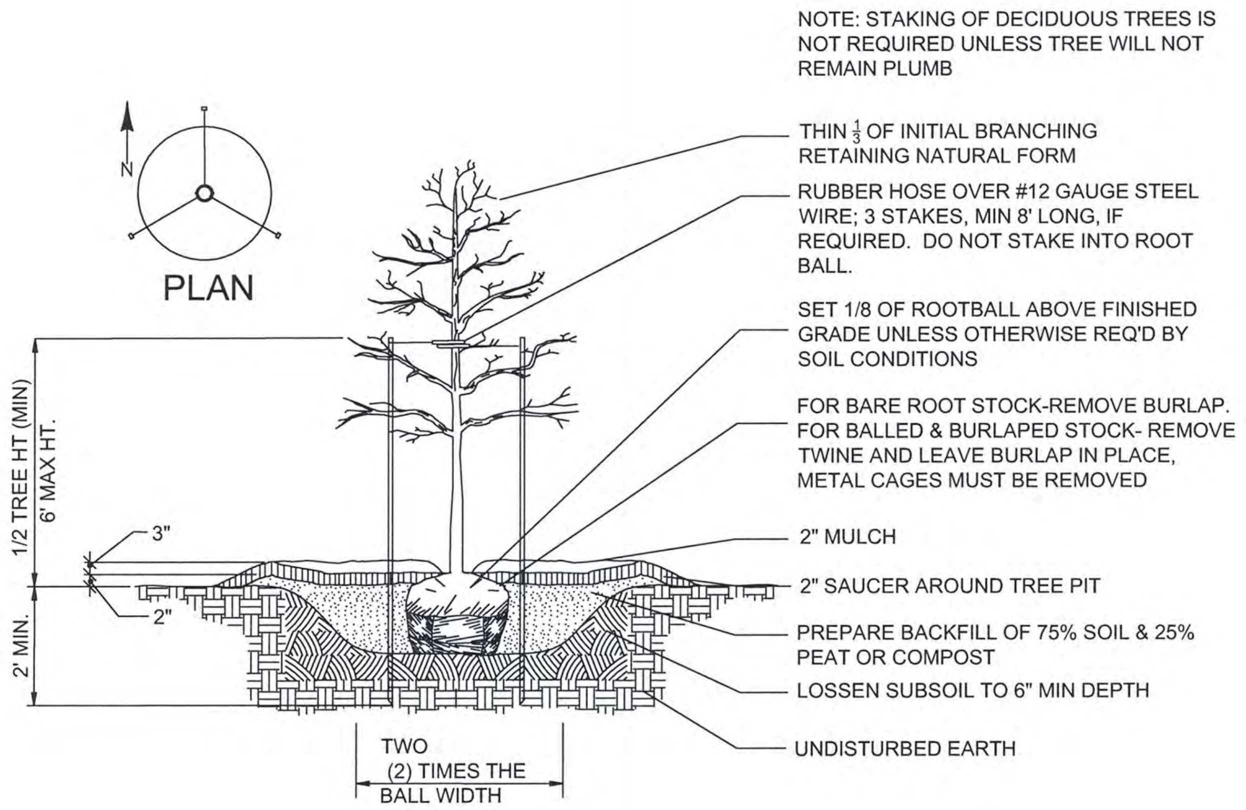

DECIDIOUS TREE PLANTING DETAIL

NOT TO SCALE

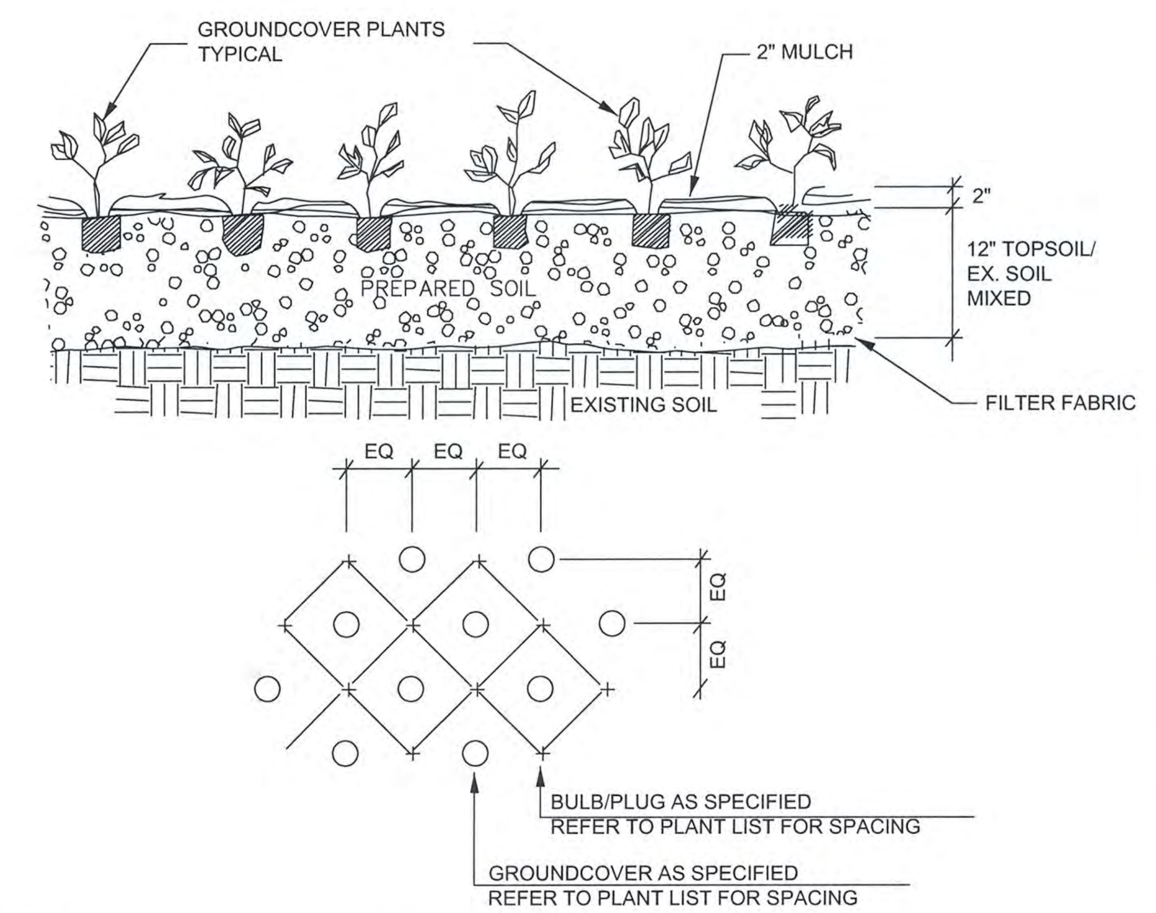

PERENNIAL PLANTING DETAIL

NOT TO SCALE

NOTES

1. TREES ARE NOT PERMITTED WITHIN TEN (10) FEET OF PUBLIC UTILITIES.
2. ALL REQUIRED LANDSCAPE MATERIAL INDICATED ON APPROVED PLANS WILL BE REQUIRED THROUGH THE LIFE OF THE PROJECT AND MUST BE REPLACED IF REMOVED OR DEAD AFTER IMPLEMENTATION BY THE PROPERTY OWNER.
3. NO PLANT SUBSTITUTIONS, TYPE, SIZE, OR QUANTITY DEVIATIONS FROM THE APPROVED LANDSCAPE OR BUFFER PLANS SHALL BE MADE WITHOUT PRIOR APPROVAL FROM THE MONTGOMERY COUNTY DEPARTMENT OF ENVIRONMENTAL PROTECTION.

LANDSCAPE ARCHITECT CERTIFICATE

I HEREBY CERTIFY THAT THE INFORMATION SHOWN HEREON IS CORRECT AND TAKEN FROM AVAILABLE PLANS AND RECORDS.

STATE OF MARYLAND · ERIC JOHN STURM · 755 · LICENSED LANDSCAPE ARCHITECT

DATE

ERIC J. STURM
REGISTERED LANDSCAPE ARCHITECT MD. # 755

GENERAL NOTES:
1. THIS PLAN SHALL ONLY BE USED FOR LANDSCAPE IMPROVEMENTS AS SHOWN. THIS PLAN SHALL NOT BE USED FOR ANY OTHER CONSTRUCTION PURPOSE. SEE THE SITE PLAN FOR SITE GRADING.
2. THE EXISTING UTILITIES SHOWN HEREON HAVE BEEN LOCATED USING INFORMATION AVAILABLE AT THE TIME THIS PLAN WAS PREPARED. PRIOR TO DIGGING, THE CONTRACTOR SHALL LOCATE ALL EXISTING UTILITIES VIA TEST PIT WITHIN THE LIMITS OF CONSTRUCTION SHOWN ON THIS PLAN AND CONFIRM THAT NO CONFLICTS EXIST. ANY CONFLICTS MUST BE BROUGHT TO THE ATTENTION OF CPJ AND THE OWNER PRIOR TO STARTING CONSTRUCTION.

MISS UTILITY

Call "Miss Utility" at 1-800-257-7777, 48 hours prior to the start of work. The excavator must notify all public utility companies with underground facilities in the area of proposed excavation and have those facilities located by the utility companies prior to commencing excavation. The excavator is responsible for compliance with requirements of Chapter 36A of the Montgomery County Code.

MONTGOMERY COUNTY DEPARTMENT OF PERMITTING SERVICES APPROVED FOR:

NOTE: MCDPS APPROVAL DOES NOT NEGATE THE NEED OF A MCDPS ACCESS PERMIT

STORMWATER MANAGEMENT	SEDIMENT CONTROL TECHNICAL REQUIREMENTS:	ADMINISTRATIVE REQUIREMENTS:
REVIEWED DATE	REVIEWED DATE	REVIEWED DATE
APPROVED DATE	APPROVED DATE	SEDIMENT CONTROL PERMIT NO.
S.M.FILE NO.		MCDPS APPROVAL OF THIS PLAN WILL EXPIRE ONE YEAR FROM THE DATE OF APPROVAL. IF THE PROJECT HAS NOT STARTED, UNLESS THE PERMIT HAS BEEN EXTENDED.

Department of Environmental Protection
Montgomery County Maryland

MARK	DESCRIPTION	DATE	APPR.
MARK	DESCRIPTION	DATE	APPR.

DATE: JAN., 2014
TASK ORDER NO.: 12-01
CONTRACT NO.:
FILE NUMBER:
DESIGNED BY: BMF
DWN BY: ADG
CKD BY: JBB
SUBMITTED BY: JBB
PLOT SCALE: AS-SHOWN
PLOT DATE: 1/20/2014
SIZE: ANSI D
FILE NAME: 01-EC-02.DWG

MR.CRAIG CARSON 240-777-7713
MONTGOMERY COUNTY DEPARTMENT OF ENVIRONMENTAL PROTECTION
255 ROCKVILLE PIKE
ROCKVILLE, MD 20850

CPJ Associates

TASK ORDER 12-01
POTOMAC RIDGE SWM POND RETROFIT
(ASSET #10876) - NOT FOR CONSTRUCTION
DARNESTOWN (6TH) ELECTION DISTRICT
MONTGOMERY COUNTY, MARYLAND

LANDSCAPE DETAILS

SHEET NO. 12 OF 12

LP-02

Attached Xrefs: