CHADSWOOD
REGIONAL STORMWATER MANAGEMENT POND REPAIR AND RETROFIT (2014)
GERMANTOWN (9th) ELECTION DISTRICT
MONTGOMERY COUNTY, MARYLAND

SEQUENCE OF CONSTRUCTION FOR
CHADSWOOD DAM (MCDEP ASSET #10803)
REPAIR AND RETROFIT

GENERAL NOTES:
1. SEDIMENT CONTROLS MAY BE ADDED, DELETED, OR FIELD ADJUSTED BY THE MCDPS SEDIMENT CONTROL INSPECTOR AT ANY TIME.
2. FOR ALL STAKEOUTS INCLUDING GRADING OF ANY KIND, CONTRACTOR TO PROVIDE OWNER AND ENGINEER WITH A CUT SHEET A MINIMUM OF 72 HOURS IN ADVANCE OF GRADING.

PRECONSTRUCTION
1. PRIOR TO CLEARING OF TREES, INSTALLING SEDIMENT CONTROL MEASURES, GRADING, OR ANY OTHER LAND DISTURBING ACTIVITIES, A PRECONSTRUCTION MEETING MUST BE CONDUCTED ON-SITE WITH THE:
   a. MONTGOMERY COUNTY DEPARTMENT OF PERMITTING SERVICES (MCDPS) SEDIMENT CONTROL INSPECTOR (240) 777-0311 (48 HOURS NOTICE)
   b. M-NCPPC FOREST CONSERVATION INSPECTION (301) 495-4712 (48 HOURS NOTICE)
   c. MARYLAND DEPARTMENT OF THE ENVIRONMENT DAM SAFETY DIVISION (MDE) ENGINEER (443) 271-8121 (5 DAYS NOTICE)
   d. OWNER'S REPRESENTATIVE (240) 777-7723 (5 DAYS NOTICE)
   e. ENGINEER-IN-CHARGE (301) 434-7000 (5 DAYS NOTICE).
2. THE LIMITS OF DISTURBANCE MUST BE FIELD-MARKED PRIOR TO HOLDING THE PRE-CONSTRUCTION MEETING.

SEDIMENT CONTROL INSTALLATION

3. CLEAR AND GRADE FOR INSTALLATION OF SEDIMENT CONTROL DEVICES ONLY.
4. INSTALL SEDIMENT CONTROL DEVICES.
5. ONCE THE SEDIMENT CONTROL DEVICES ARE INSTALLED, THE CONTRACTOR MUST OBTAIN WRITTEN APPROVAL FROM THE MCDPS INSPECTOR BEFORE PROCEEDING WITH ANY ADDITIONAL CLEARING, GRUBBING, OR GRADING.
6. REMOVE EXISTING 42" AND 18" STORM DRAIN. REMOVE EXISTING STRUCTURES ES3, ES4 AND MH3.
7. INSTALL 27" PIPE SLOPE DRAIN CONNECTION TO EXISTING 18" R.C.P. OVER LAP EXPOSED END OF EXISTING 18" R.C.P. WITH 27" H.D.P.E. AND CREATE A WATER TIGHT SEAL USING MORTAR AND A CONCRETE COLLAR. INSTALL 36" PIPE SLOPE DRAIN CONNECTED TO EXISTING 42" R.C.P. OVER LAP EXPOSED END OF EXISTING 42" R.C.P. WITH 36" H.D.P.E. AND CREATE A WATER TIGHT SEAL USING MORTAR AND A CONCRETE COLLAR. SEE SHEET SC-4 OF THE DESIGN PLANS FOR DETAILS.
8. INSTALL DIVERSION WALL.

SLIP LINING

9. REMOVE EXISTING STRUCTURES CS1 AND CS2
10. INSTALL 36" H.D.P.E. DIVERSION PIPE FROM INFLOW CHANNEL TO EXISTING 72" C.M.P.
11. EXTEND EXISTING 66" C.M.P. AND CONSTRUCT ACCORNING TO DETAIL ON PLANS
12. SLIP LINE EXISTING 66" C.M.P.
13. RELOCATE 36" DIVERSION PIPE TO CONNECT TO EXISTING 66" C.M.P.
14. EXTEND EXISTING 72" C.M.P. AND CONSTRUCT ACCORDING TO DETAIL ON PLANS
15. SLIP LINE EXSITNG 72" C.M.P.
16. RELOCATE 36" DIVERSION PIPE BACK INTO 72" SLIPLINED C.M.P.

RISER AND CLAY CUTOFF CONSTRUCTION
NOTES:
1. ITEMS 17-25 TO BE COMPETED UNDER THE SUPERVISION OF A PROFESSIONAL GEOTECHNICAL ENGINEER.
2. PRIOR TO RISER CONSTRUCTION, A PRE-POUR MEETING SHOULD BE HELD ON SITE WITH THE OWNER'S REPRESENTATIVE, ENGINEER-IN-CHARGE, GEOTECHNICAL ENGINEER, GENERAL CONTRACTOR AND CONCRETE CONTRACTOR.

17. INSTALL CLAY CUTOFF TRENCH
18. INSTALL THE FORMWORK AND REINFORCEMENT FOR INSTALLATION OF THE RISER STRUCTURE FOUNDATION AS SHOWN ON THE PLANS. ALL FORMWORK AND REINFORCEMENT IS TO BE INSPECTED BY THE GEOTECHNICAL ENGINEER OF RECORD PRIOR TO CLOSING THE FORMS.
19. POUR THE CONCRETE FOR THE RISER STRUCTURE FOUNDATION. FORMS SHOULD NOT BE REMOVED FROM THE RISER UNTIL SEVEN DAYS HAVE ELAPSED FROM DATE OF POUR.
20. INSTALL THE FORMWORK, REINFORCEMENT, AND 12" D.I.P. LOW FLOW PIPE STUB FOR INSTALLATION OF THE RISER STRUCTURE WALLS AS SHOWN ON THE PLANS. ALL FORMWORK AND REINFORCEMENT IS TO BE INSPECTED BY THE GEOTECHNICAL ENGINEER OF RECORD PRIOR TO CLOSING THE FORMS.
21. POUR THE CONCRETE FOR THE RISER STRUCTURE WALLS. FORMS SHOULD NOT BE REMOVED FROM THE RISER UNTIL SEVEN DAYS HAVE ELAPSED FROM DATE OF POUR.
22. INSTALL THE FORMWORK AND REINFORCEMENT FOR INSTALLATION OF THE RISER STRUCTURE TOP SLAB AS SHOWN ON THE PLANS. ALL FORMWORK AND REINFORCEMENT IS TO BE INSPECTED BY THE GEOTECHNICAL ENGINEER OF RECORD PRIOR TO CLOSING THE FORMS.
23. POUR THE CONCRETE FOR THE RISER STRUCTURE TOP SLAB. FORMS SHOULD NOT BE REMOVED FROM THE RISER UNTIL SEVEN DAYS HAVE ELAPSED FROM DATE OF POUR.
24. EXCAVATE FOR INSTALLATION OF THE MINI RISER WITH FOOTING AND LOW FLOW PIPE.
25. INSTALL THE MINI RISER AND PORTION OF LOW FLOW PIPE BETWEEN MINI RISER AND CAST-IN-PLACE RISER.
26. EXCAVATE FOR INSTALLATION OF THE LOW FLOW HEADWALL AND THE REMAINING LOW FLOW PIPE.
27. INSTALL THE REMAINING LOW FLOW PIPE, THE LOW FLOW HEAD WALL, AND THE LOW FLOW TRASH RACK.
28. INSTALL RISER MANHOLE FRAMES AND COVER, STEEL LADDER, MANHOLE STEPS AND TRASH RACKS.
29. REMOVE DIVERSION WALL AND 36" DIVERSION PIPE. WATER WILL NOW BE DIVERTED THROUGH LOW FLOW OPENING.
30. INSTALL CONCRETE PLUG IN RISER.

STORM DRAIN CONSTRUCTION

31. REMOVE TEMPORARY 27" AND 36" H.D.P.E. PIPE SLOPE DRAINS AND INSTALL STORM DRAIN STRUCTURES MH1, MH2, MH4, EW1, EW2, AND ALL INCLUSIVE STORM DRAIN FROM DOWNSTREAM TO UPSTREAM.
32. INSTALL ANY SIDEWALK REMOVED FOR THE INSTALLATION OF THE STORM DRAIN.

EMBANKMENT MODIFICATIONS

NOTE:
1. ITEMS 34 AND 36 TO BE COMPETED UNDER THE SUPERVISION OF A PROFESSIONAL GEOTECHNICAL ENGINEER.

ITEM 36 MAY BE COMPLETED CONCURRENTLY WITH ITEMS 9-35
33. REGRADE UPSTREAM EMBANKMENT
34. INSTALL CLAY LINER.
35. INSTALL ALL RIPRAP IN POND BOTTOM AND AT STORM DRAIN OUTFALLS.
36. INSTALL SAND FILTER DIAPHRAGM; REFER TO DETAIL ON SHEET SWM-8 OF THE DESIGN PLANS.
37. COMPLETELY AND PERMANENTLY STABILIZE ALL EXPOSED PORTIONS OF THE DAM AS SOON AS POSSIBLE TO PREVENT EROSION.
38. INSTALL LOW FLOW ORIFICE PLATE.
39. RESTORE PUBLIC RIGHT-OF-WAY TO EXISTING CONDITION.
40. STABILIZE ALL REMAINING DISTURBED AREAS

PROJECT CLOSEOUT
41. COMPLETE ASBUILT SURVEY OF ALL PROJECT WORK.
42. OBTAIN A PUNCH LIST INSPECTION FROM THE ENGINEER-IN-CHARGE.
43. ADDRESS ALL PUNCH LIST ITEMS TO THE SATISFACTION OF THE OWNER, ENGINEER-IN-CHARGE, AND THE MDE ENGINEER.
44. HOLD A FINAL INSPECTION WITH THE MDE ENGINEER.
45. OBTAIN WRITTEN APPROVAL FROM THE MCDPS SEDIMENT CONTROL INSPECTOR TO REMOVE ALL SEDIMENT CONTROL DEVICES.
46. ENGINEER-IN-CHARGE TO COMPLETE RECORD DRAWING SURVEY AND OBTAIN APPROVAL OF RECORD DRAWINGS AND FINAL REPORT WITHIN 60 DAYS OF COMPLETION OF FINAL INSPECTION BY THE MDE ENGINEER.

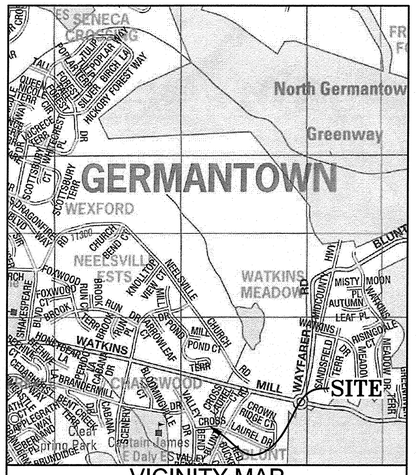

VICINITY MAP
SCALE: 1"=1000'
Map 4929, Grid D10
Map Copyright©Kappa LLC
(800)-829-6277 Used with Permission

MONTGOMERY COUNTY PLANNING DEPARTMENT
THE MARYLAND-NATIONAL CAPITAL PARK AND PLANNING COMMISSION

November 5, 2013

Mr. Gene Gopenko
Montgomery County Dept. of Environmental Protection
255 Rockville Pike, Suite 120
Rockville, MD 20850

Re: Forest Conservation Exemption Request
Property Name: Chadswood Emergency Dam Rehabilitation
Plan Number: 42014079E

Dear Mr. Gopenko

Based on the review by staff of the Montgomery County Planning Department, the Forest Conservation Exemption Request submitted on October 31, 2013 for the plan identified above, is confirmed. The project site is exempt from Article II of the Montgomery County Code, Chapter 22A (Forest Conservation Law), Section 22A-5(h) because the work is considered an activity which is a utility or other work that is of an emergency nature. The current erosion on the dam structure is threatening to undercut the sidewalk and roadway of Cross Laurel Drive. In addition, the internal overflow structures are likely to collapse due to this undercutting.

An on-site pre-construction meeting is required after the limits of disturbance have been staked and flagged, but before any clearing or grading begins. The property owner should contact the Montgomery County Planning Department inspection staff before construction to verify the limits of disturbance. The property owner, construction superintendent, forest conservation inspector, and Department of Permitting Services (DPS) sediment control inspector should attend this pre-construction meeting.

Any unauthorized changes from the approved exemption request may constitute grounds to rescind or amend any approval actions taken and to take appropriate enforcement actions. If you have any questions regarding these actions, please feel free to contact by email at douglas.johnsen@montgomeryplanning.org or at (301) 495-4712.

Sincerely,

Doug Johnsen, PLA
Sr. Planner
DARC Division

CC: File 42014079E
Mr. Jeff Blass (CPJ, Inc.)

8787 Georgia Avenue, Silver Spring, Maryland 20910
Development Application and Regulatory Coordination Division: 301.495.4550 Fax: 301.495.1306
www.MontgomeryPlanning.org

DESIGN CERTIFICATION

I hereby certify that this plan has been prepared in accordance with the "2011 Maryland Standards and Specification for Soil Erosion and Sediment Control," Montgomery County Department of Permitting Services Executive Regulations 5-90, 7-02AM and 36-90, and Montgomery County Department of Public Works and Transportation "Storm Drain Design Criteria" dated November 2013.

Design Engineer Signature — Date: 18 July 2014
Printed Name: Jeffrey Blass — Registration Number: 32457

CUT AND FILL CERTIFICATION

I hereby certify that the estimated total amount of excavation and fill as shown on these plans has been computed to be 62.0 cu. yds. of excavation and 239 cu. yds. of fill and the total area to be disturbed as shown on these plans has been determined to be 32,852 sq. ft. (0.75 Ac.).

Signature (P.E.) — 32457 Maryland Registration No.
Jeffrey Blass — Printed Name — 18 July 2014 Date

OWNERS/DEVELOPERS CERTIFICATION

I/We hereby certify that all clearing, grading, construction and/or development will be done pursuant to this plan and that any responsible personnel involved in the construction project will have a certificate of attendance at a Department of Natural Resources approved training program for the control of sediment and erosion before beginning the project.

Owner/Developer Signature — Date
GENE GOPENKO
Printed Name and Title

IT IS THE RESPONSIBILITY OF PERMITTEE/OWNER OF THIS SITE TO OBTAIN ALL REQUIRED PERMITS PRIOR TO ISSUANCE OF THE APPROVED SEDIMENT CONTROL PERMIT:

TYPE OF PERMIT	REQ'D	NOT REQ'D	PERMIT No.	EXPIRATION DATE	WORK RESTRICTION DATES
MCDPS Floodplain District	X		306343		
WATERWAYS/WETLAND(S):					
a. Corps. of Engineers	X		13-NT-3392	03/24/2017	March 1 to June 15
b. MDE	X		13-NT-3392	03/24/2017	March 1 to June 15
c. MDE Water Quality Certification	X		13-NT-3392	03/24/2017	March 1 to June 15
MDE DAM SAFETY	X		14-MR-0021		
N.P.D.E.S. NOTICE OF INTENT		X			DATE FILED
OTHERS (Please List):					
MCDPS ACCESS	X		306289		

SHEET INDEX		
SHEET NO.	DRAWING NO.	SHEET TITLE
1	G-1/SC-1	COVER SHEET
2	G-2/SC-2	MASTER LEGEND AND ABBREVIATIONS
3	AB-1	EXISTING CONDITIONS PLAN VIEW
4	AB-2	EXISTING CONDITIONS DETAILS
5	SC-3	SEDIMENT CONTROL PLAN VIEW
6	SC-4	SEDIMENT CONTROL NOTES AND DETAILS
7	SC-5	SEDIMENT CONTROL DETAILS
8	SWM-1	DRAINAGE AREA MAP
9	SWM-2	STORMWATER MANAGEMENT PLAN VIEW
10	SWM-3	STORMWATER MANAGEMENT PROFILES AND DETAILS
11	SWM-4	RISER DESIGN
12	SWM-5	STORMWATER MANAGEMENT NOTES AND DETAILS
13	SWM-6	STORMWATER MANAGEMENT NOTES AND DETAILS
14	SWM-7	STORMWATER MANAGEMENT NOTES AND DETAILS
15	SWM-8	SAND FILTER DIAPHRAGM DETAILS
16	B-1	SOIL BORING LOGS
17	S-1	RISER STRUCTURAL DESIGN
18	MOT-1	MAINTENANCE OF TRAFFIC PLAN
19	SD-1	STORM DRAIN PLAN
20	SD-2	STORM DRAIN PROFILES
21	SD-3	STORM DRAIN DETAILS

MISS UTILITY

Call "Miss Utility" at 1-800-257-7777, 48 hours prior to the start of work. The excavator must notify all public utility companies with underground facilities in the area of proposed excavation and have those facilities located by the utility companies prior to commencing excavation. The excavator is responsible for compliance with requirements of Chapter 36A of the Montgomery County Code.

MS4 SUMMARY TABLE - POND/WETLAND

"FACILITY ID"	FACILITY TYPE	DRAINAGE AREA (AC)1	"CREDITED IA (AC)2"	TARGETED WQv (AC-FT)	PROVIDED WQv (AC-FT)	TARGETED CPv (AC-FT)	PROVIDED CPv (AC-FT)	TARGETED CP RELEASE RATE (CFS)	PROVIDED CP RELEASE RATE (CFS)	TARGETED ESDv (AC-FT)	PROVIDED ESDv (AC-FT)
10803	DRY E.D. POND	323.54	45.05	5.07	0.00	9.27	6.63	5.34	4.32	0	0

1. Drainage area is the total physical drainage area to the facility, including child facilities.
2. Credited impervious area is the currently untreated impervious area that falls within Montgomery County's MS4 jurisdiction.

PROJECT BENEFITS
1. Improved stormwater management through increased channel protection and water quality
2. Safety improvements to dam and basin slopes
3. Improved aesthetics through landscaping

GENERAL NOTES:
1. ONLY APPROVED PLANS THAT HAVE BEEN SIGNED BY THE APPROPRIATE REGULATING AUTHORITY SHALL BE USED FOR THE CONSTRUCTION OF THE IMPROVEMENTS SHOWN ON THESE DRAWINGS. AUTOCADD FILES OR OTHER ELECTRONIC FILES ARE NOT TO BE USED FOR CONSTRUCTION PURPOSES.
2. THE EXISTING UTILITIES SHOWN HEREON HAVE BEEN LOCATED USING INFORMATION AVAILABLE AT THE TIME THIS PLAN WAS PREPARED. PRIOR TO DIGGING, THE CONTRACTOR SHALL LOCATE ALL EXISTING UTILITIES VIA TEST PITS WITHIN THE LIMITS OF CONSTRUCTION SHOWN ON THIS PLAN AND CONFIRM THAT NO CONFLICTS EXIST. ANY CONFLICTS MUST BE BROUGHT TO THE ATTENTION OF CPJ AND THE OWNER PRIOR TO STARTING CONSTRUCTION.
3. THE PLANIMETRIC INFORMATION SHOWN ON THIS PLAN IS BASED ON COPYRIGHTED GIS DATA FROM M-NCPPC, AND MAY NOT BE COPIED OR REPRODUCED WITHOUT EXPRESS WRITTEN PERMISSION FROM M-NCPPC.
4. PRIOR TO VEGETATIVE STABILIZATION, ALL DISTURBED AREAS MUST BE TOP-SOILED PER THE MDE STANDARDS AND SPECIFICATIONS FOR TOPSOIL.
5. THESE PLANS DO NOT INCLUDE THE NECESSARY PRECAUTIONS FOR CONSTRUCTION SAFETY. THE CONTRACTOR SHALL PERFORM WORK IN ACCORDANCE WITH THE HEALTH AND SAFETY ACTS OF 1970 AND ALL RULES AND REGULATIONS THERE TO APPURTENANT.
6. THERE IS NO FEMA 100 YEAR FLOODPLAIN PER FEMA FIRM No. 24031C0180D EFFECTIVE SEPTEMBER, 2006.
7. THIS DAM IS A SIGNIFICANT HAZARD (CLASS 'B') STRUCTURE BASED ON A DAM BREACH ANALYSIS PREPARED BY CHARLES P. JOHNSON AND ASSOCIATES, INC., DATED SEPT. 2013.
8. THE CONTRACTOR IS RESPONSIBLE FOR REPAIRING, REPLACING, OR RECONSTRUCTING EXISTING SITE FEATURES (E.G. CURB AND GUTTER, SIDEWALK, FENCING, SOIL, UTILITIES, ETC.) DAMAGED AS A RESULT OF PROJECT WORK.

TRAVERSE CHART

TRAVERSE POINT	NORTHING	EASTING	ELEV.	DESCRIPTION
601	554521.8420	1247246.8880	377.26	REBAR & CAP SET (CPJ 181)
604	554567.2202	1247462.4867	375.90	REBAR & CAP SET (CPJ 181)
607	554862.3630	1247328.1702	380.58	REBAR & CAP SET (CPJ 181)

SITE ADDRESS
CROSS LAUREL DRIVE
AND BLUNT ROAD
GERMANTOWN, MD 20876

PROPERTY DESCRIPTION
PARCEL 'O' & 'O' BLOCK A
L.6269 F.758
TAX MAP: FU23
GERMANTOWN, MARYLAND
20876

DPS PERMIT # 306289

STATE OF MARYLAND — JEFFREY BRIAN BLASS — 32457 — PROFESSIONAL ENGINEER
18 July 2014
PROFESSIONAL CERTIFICATION
I HEREBY CERTIFY THAT THESE DOCUMENTS WERE PREPARED OR APPROVED BY ME, AND THAT I AM A DULY LICENSED PROFESSIONAL ENGINEER UNDER THE LAWS OF THE STATE OF MARYLAND.
LICENSE #: 32457
EXPIRATION DATE: 06/30/2016

MONTGOMERY COUNTY DEPARTMENT OF PERMITTING SERVICES APPROVED FOR:

Stormwater Management:
SEDIMENT CONTROL REVIEW ONLY
Reviewed — Date
Approved — Date
1007 REG
S.M.File No.

Sediment Control Technical Requirements:
Reviewed — 5/19/14 Date
Approved — 5/19/14 Date

NOTE: MCDPS APPROVAL DOES NOT NEGATE THE NEED OF A MCDPS ACCESS PERMIT.

Administrative Requirements:
Reviewed — 5/19/14 Date
259755
SEDIMENT CONTROL PERMIT No.

MCDPS APPROVAL OF THIS PLAN WILL EXPIRE ONE YEAR FROM THE DATE OF APPROVAL IF THE PROJECT HAS NOT STARTED, UNLESS THE PERMIT HAS BEEN EXTENDED.

COVER SHEET

REGIONAL STORMWATER MANAGEMENT
POND REPAIR AND RETROFIT (2014)
CHADSWOOD
GERMANTOWN (9th) ELECTION DISTRICT
MONTGOMERY COUNTY, MARYLAND

CPJ Associates — Charles P. Johnson & Associates, Inc.
Civil and Environmental Engineers • Planners • Landscape Architects • Surveyors
1751 Elton Rd., Ste. 300 Silver Spring, MD 20903 301-434-7000 Fax: 301-434-9394
www.cpja.com • Silver Spring, MD • Gaithersburg, MD • College Park, MD • Frederick, MD • Fairfax, VA

CLIENT: MONTGOMERY COUNTY DEPARTMENT OF ENVIRONMENTAL PROTECTION
255 ROCKVILLE PIKE SUITE 120
ROCKVILLE, MARYLAND 20850
CONTACT: GENE GOPENKO, P.E.
PHONE:(240) 777-7723

PRELIMINARY PLAN NO: N/A
SITE PLAN NO: N/A
DESIGN JBB
DRAFT ADG
DATE JULY, 2014
SCALE AS-SHOWN
SHEET 1 OF 21
G-1/SC-1 G-2/SC-5
FILE NO: 43-274-24.1

COPYRIGHT © LATEST DATE HEREON CHARLES P. JOHNSON & ASSOCIATES, INC. ALL RIGHTS RESERVED, UNAUTHORIZED USE OR REPRODUCTION IS PROHIBITED.

MASTER LEGEND

EXISTING CONTOURS — 452
EXISTING INDEX CONTOURS — 450
PROPOSED CONTOURS — 452
PROPOSED INDEX CONTOURS — 450
EXISTING STORM DRAIN PIPE — EX. 36" C.M.P.
PROPOSED STORM DRAIN PIPE — 36" C.M.P.
PROPOSED LIMITS OF DISTURBANCE — LOD
EX. 100 YEAR FLOOD PLAIN — FP FP
1 YEAR WATER SURFACE ELEV.
10 YEAR WATER SURFACE ELEV.
100 YEAR WATER SURFACE ELEV.
PROPOSED/EXISTING RIPRAP
EX. FENCE
EXISTING PROPERTY LINE
EXISTING SWM EASEMENT
EX. SEWER LINE — SEW SEW
EX. WATER LINE — WL WL
FIBER OPTIC — FO FO FO
DIRECT BURIED CABLE — UG UG UG
TELECOMUNICATION — C C C
ELECTRIC — E E E
OVERHEAD WIRE — OW OW OW OW
WETLAND — W W W
25' WETLAND BUFFER — WB WB WB
STREAM
EX. TREE LINE
PROP. TREE LINE
EX. STORM DRAIN EASEMENT
PROP. STORM DRAIN EASEMENT

EX. SEWER MANHOLE — MH SEW
EX. STORMDRAIN MANHOLE — D
EX. LIGHT POLE
ELECTRICAL BOX — EX
EX. SIGN
EX. FIRE HYDRANT
EX. TREE TO BE REMOVED
EX. TREE TO REMAIN
SUMP PIT — SP
PUMP — P
FILTER BAG — FB
TEMPORARY BRIDGE — TB
STAGING/STOCKPILE AREA
STRUCTURAL LABEL — HW
TRAVERSE POINT — 642
STABILIZED CONSTRUCTION ENTRANCE — SCE
DRAINAGE SLOPE — XX:XX
SILT FENCE — SF SF
SUPER SILT FENCE — SSF SSF
TREE PROTECTION FENCE — TPF TPF TPF
BLAZE ORANGE FENCE — BOF BOF
CHAIN LINK FENCE — X X X
SHEETING AND SHORING — X X X
DIVERSION WALL
CONCRETE WASHOUT STRUCTURE — CWS
PROPOSED SIDEWALK

MASTER LIST OF ABBREVIATIONS

Ac.	-	ACRE(S)
ACI	-	AMERICAN CONCRETE INSTITUTE
ASTM	-	AMERICAN SOCIETY FOR TESTING MATERIALS
C	-	CABLE
℄	-	CENTERLINE
CS	-	CONTROL STRUCTURE
C/C	-	CENTER-TO-CENTER
CF	-	CUBIC FEET
cfs	-	CUBIC FEET PER SECOND
CL	-	CLASS
C.M.P.	-	CORRUGATED METAL PIPE
C.P.	-	CHANNEL PROTECTION
CPv	-	CHANNEL PROTECTION VOLUME
D	-	DEPTH
DBC	-	DIRECT BURIED CABLE
DA	-	DRAINAGE AREA
D50	-	50TH PERCENTILE OF DIAMETER
D.I.P.	-	DUCTILE IRON PIPE
EX.	-	EXISTING
EX. TBR	-	EXISTING TO BE REMOVED
ELEC/E	-	ELECTRIC
ELEV	-	ELEVATION
EW	-	END WALL
ES	-	END SECTION
f.a.s.	-	FEET PER SECOND
FO	-	FIBER OPTIC
FT	-	FEET
GALV.	-	GALVANIZED
HW	-	HEADWALL
H.D.P.E.	-	HIGH DENSITY POLYETHYLENE
HGL	-	HYDRAULIC GRADE LINE
HSG	-	HYDROLOGIC SOIL GROUP
I	-	INLET
INV.	-	INVERT
L	-	LENGTH OF CURVE (CURVE DATA)
L.F.	-	LINEAR FEET
LP	-	LOW POINT
MCDEP	-	MONTGOMERY COUNTY DEPARTMENT OF ENVIRONMENTAL PROTECTION
MCDPS	-	MONTGOMERY COUNTY DEPARTMENT OF PERMITTING SERVICES
MDE	-	MARYLAND DEPARTMENT OF THE ENVIRONMENT
MH	-	MANHOLE
MNCPPC	-	MARYLAND NATIONAL CAPITAL PARK AND PLANNING COMMISSION
MSHA	-	MARYLAND STATE HIGHWAY ADMINISTRATION
NTS	-	NOT TO SCALE
PVC	-	POINT OF VERTICAL CURVE
PVI	-	POINT OF VERTICAL INTERSECTION
PVT	-	POINT OF VERTICAL TANGENCY
RCN	-	RUNOFF CURVE NUMBER
R.C.P.	-	REINFORCED CONCRETE PIPE
S	-	SEWER
SCH.	-	SCHEDULE
S.S.	-	SIDE SLOPE
S.W.M.	-	STORMWATER MANAGEMENT
TC	-	TOP OF CURB
T	-	TELECOMMUNICATION
Tc	-	TIME OF CONCENTRATION
TYP.	-	TYPICAL
T.B.R.	-	TO BE REMOVED
V	-	VELOCITY
W	-	WATER
WQv	-	WATER QUALITY VOLUME
WSEL	-	WATER SURFACE ELEVATION
Ø	-	DIAMETER
NFV	-	NOT FIELD VERIFIED
NF	-	NOT FOUND
REM	-	TO REMAIN

MISS UTILITY

Call "Miss Utility" at 1-800-257-7777, 48 hours prior to the start of work. The excavator must notify all public utility companies with underground facilities in the area of proposed excavation and have those facilities located by the utility companies prior to commencing excavation. The excavator is responsible for compliance with requirements of Chapter 36A of the Montgomery County Code.

STATE OF MARYLAND — STANLEY BRIAN GOLD — 32457 — REGISTERED PROFESSIONAL ENGINEER
5/12/2014

PROFESSIONAL CERTIFICATION. I HEREBY CERTIFY THAT THESE DOCUMENTS WERE PREPARED OR APPROVED BY ME, AND THAT I AM A DULY LICENSED PROFESSIONAL ENGINEER UNDER THE LAWS OF THE STATE OF MARYLAND.
LICENSE #: 32457
EXPIRATION DATE: 06/20/2016

MONTGOMERY COUNTY DEPARTMENT OF PERMITTING SERVICES APPROVED FOR:

Stormwater Management:
SEDIMENT CONTROL REVIEW ONLY
Reviewed — Date
Approved — Date
1007 REG
S.M.File No.

Sediment Control Technical Requirements:
M. Lavin — Reviewed — 5/12/14 — Date
Approved — 5/19/2014 — Date

Administrative Requirements:
M. Lavin — Reviewed — 5/19/14 — Date
259755
SEDIMENT CONTROL PERMIT No.

NOTE: MCDPS APPROVAL DOES NOT NEGATE THE NEED OF A MCDPS ACCESS PERMIT.

MCDPS APPROVAL OF THIS PLAN WILL EXPIRE ONE YEAR FROM THE DATE OF APPROVAL, IF THE PROJECT HAS NOT STARTED, UNLESS THE PERMIT HAS BEEN EXTENDED.

MASTER LEGEND AND ABBREVIATIONS

REGIONAL STORMWATER MANAGEMENT
POND REPAIR AND RETROFIT (2014)

CHADSWOOD

GERMANTOWN (9th) ELECTION DISTRICT
MONTGOMERY COUNTY, MARYLAND

CPJ Associates — Charles P. Johnson & Associates, Inc.
Civil and Environmental Engineers • Planners • Landscape Architects • Surveyors
1751 Elton Rd., Ste. 300 Silver Spring, MD 20903 301-434-7000 Fax: 301-434-9394
www.cpja.com • Silver Spring, MD • Gaithersburg, MD • College Park, MD • Frederick, MD • Fairfax, VA

CLIENT: MONTGOMERY COUNTY
DEPARTMENT OF ENVIRONMENTAL PROTECTION
255 ROCKVILLE PIKE SUITE 120
ROCKVILLE, MARYLAND 20850
CONTACT: GENE GOPENKO, P.E.
PHONE:(240) 777-7725

COPYRIGHT © LATEST DATE HEREON CHARLES P. JOHNSON & ASSOCIATES, INC. ALL RIGHTS RESERVED, UNAUTHORIZED USE OR REPRODUCTION IS PROHIBITED.

PRELIMINARY PLAN NO: N/A	SITE PLAN NO: N/A
DESIGN JBB	SHEET 2 OF 21
DRAFT ADG	G-2/SC-2 G-2/SC-5
DATE JULY, 2014	FILE NO : 43-274-24.1
SCALE AS-SHOWN	

Attached Xrefs: _TB22x34 - PUBLIC/TB22x34/06-R-T002/06-V-T001/06-R-T001

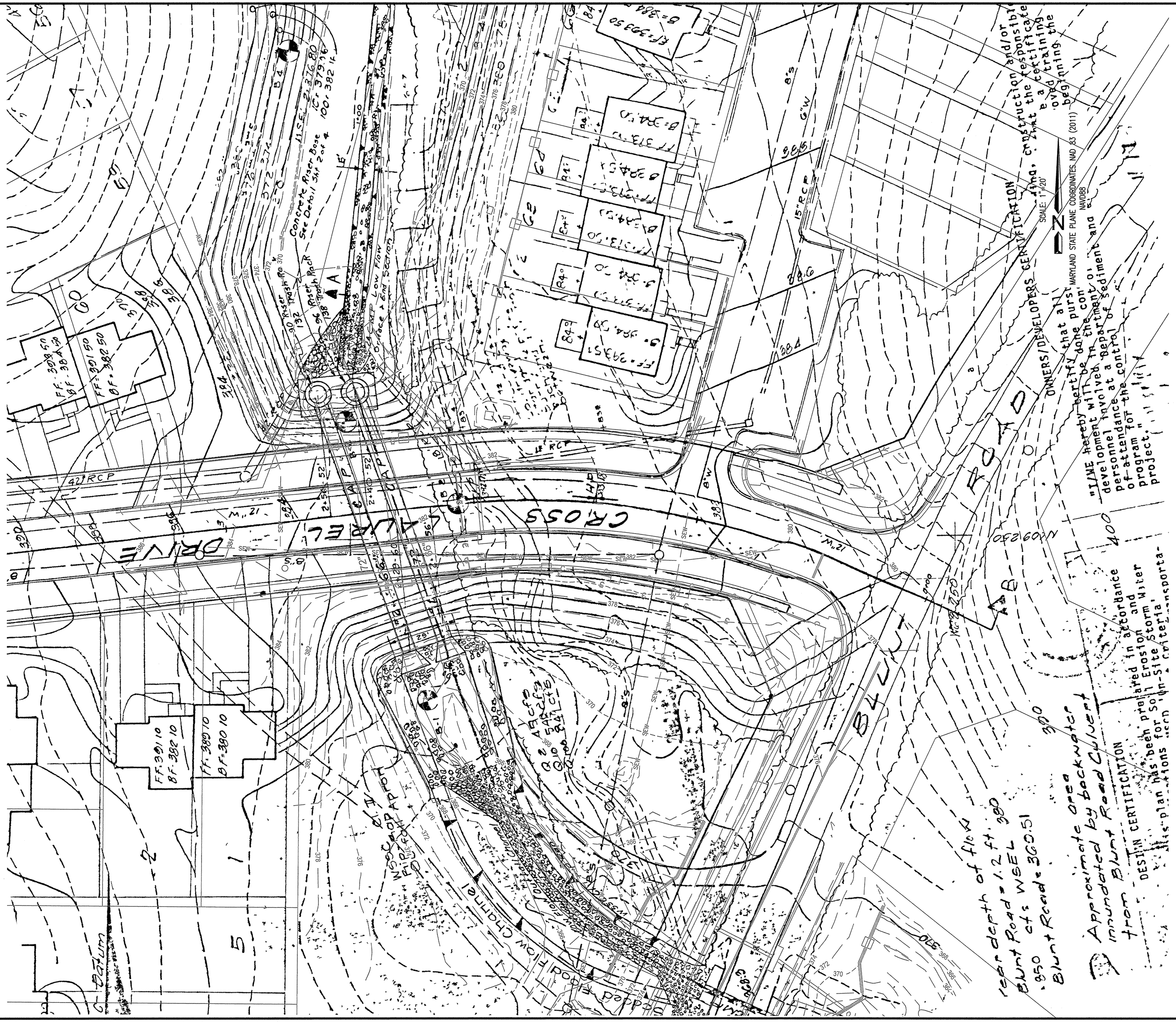

NOTE:
THIS PLAN IS PROVIDED FOR INFORMATION ONLY. ELEVATIONS AND DIMENSIONS HAVE NOT BEEN FIELD VERIFIED. VERTICAL DATUM DOES NOT MATCH DATUM USED FOR PROPOSED CONDITIONS.

EXISTING CONDITIONS PLAN VIEW
1983 DESIGN PLAN
REGIONAL STORMWATER MANAGEMENT
POND REPAIR AND RETROFIT (2014)

CHADSWOOD

GERMANTOWN (9th) ELECTION DISTRICT
MONTGOMERY COUNTY, MARYLAND

CPJ Associates
Charles P. Johnson & Associates, Inc.
Civil and Environmental Engineers • Planners • Landscape Architects • Surveyors
1751 Elton Rd., Ste. 300 Silver Spring, MD 20903 301-434-7000 Fax: 301-434-9394
www.cpja.com • Silver Spring, MD • Gaithersburg, MD • College Park, MD • Frederick, MD • Fairfax, VA

CLIENT: MONTGOMERY COUNTY
DEPARTMENT OF ENVIRONMENTAL PROTECTION
255 ROCKVILLE PIKE SUITE 120
ROCKVILLE, MARYLAND 20850
CONTACT: GENE GOPENKO, P.E.
PHONE:(240) 777-7723

COPYRIGHT © LATEST DATE HEREON CHARLES P. JOHNSON & ASSOCIATES, INC. ALL RIGHTS RESERVED, UNAUTHORIZED USE OR REPRODUCTION IS PROHIBITED.

PRELIMINARY PLAN NO: N/A	SITE PLAN NO: N/A
DESIGN JBB	SHEET 3 OF 21
DRAFT ADG	AB-1 AB-2
DATE JULY, 2014	FILE NO: 43-274-24.1
SCALE 1"=20'	

Last Saved 7/17/2014 Last Plotted 7/17/2014 2:09 PM Sheet N:\43274\DWG\24-01S3-4
Attached Xrefs: _TB22x34 - PUBLIC/TB22x34/06-R-T002/06-V-T001

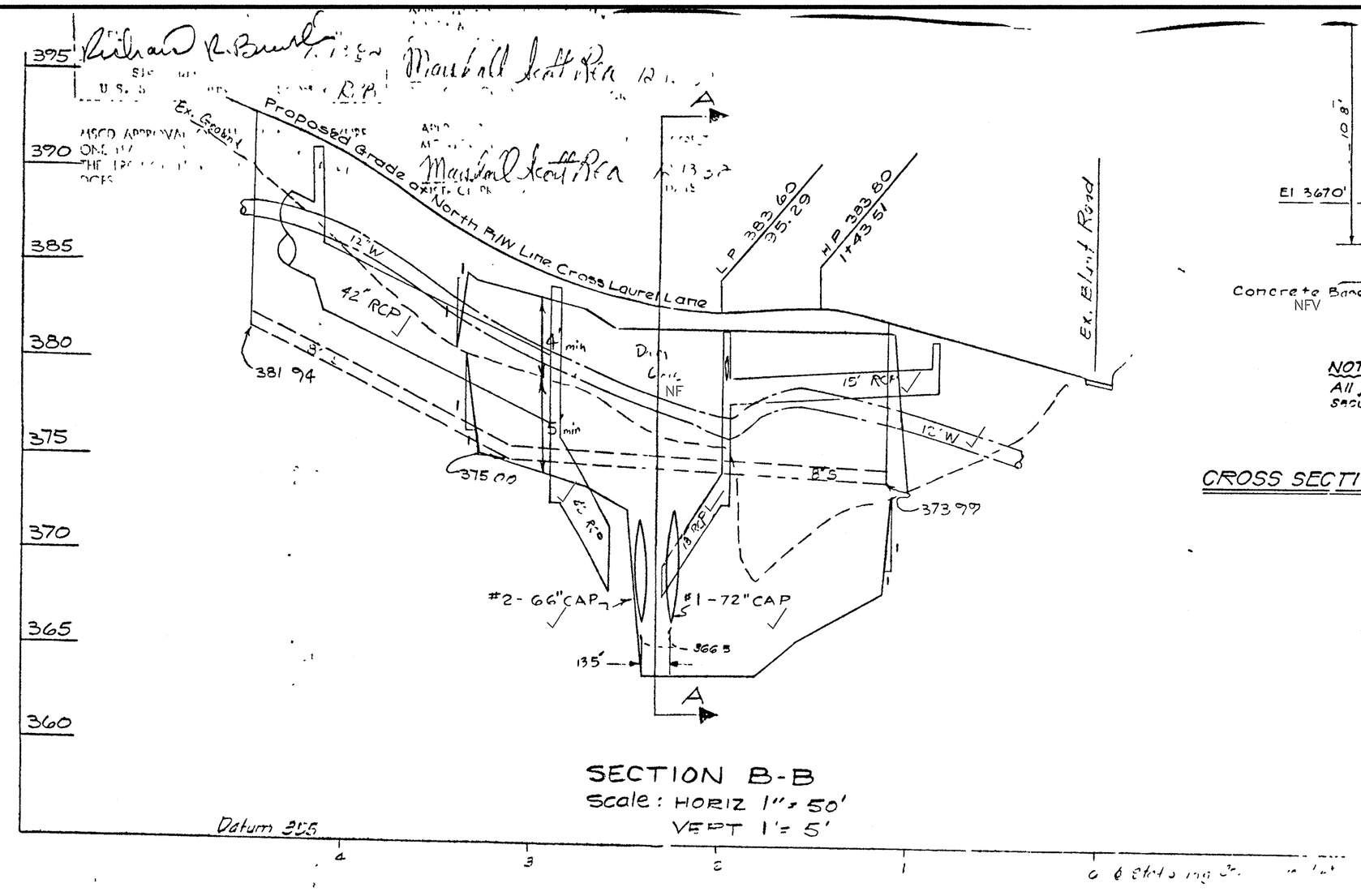

SECTION B-B
Scale: HORIZ 1" = 50'
VERT 1" = 5'

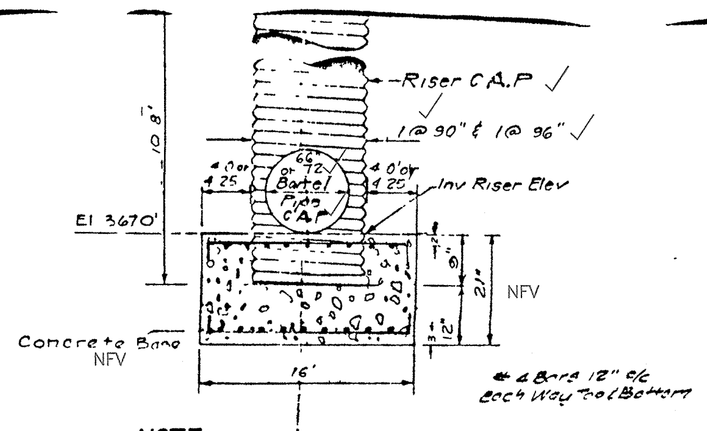

NOTE:
All joints & connections of CMP to be securely fastened & water tight

CROSS SECTION OF CONCRETE BASE
NO SCALE

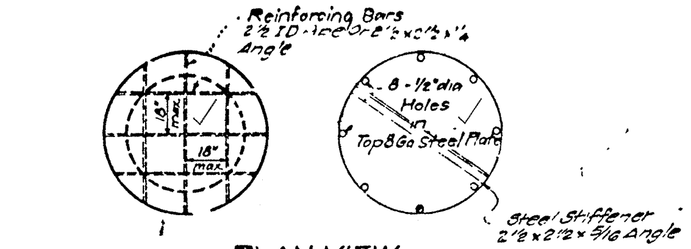

PLAN VIEW

ELEVATION

PERSPECTIVE VIEW

Riser Dia	"D"	"H"
1@ 90	132"	49
1@ 96	138"	49

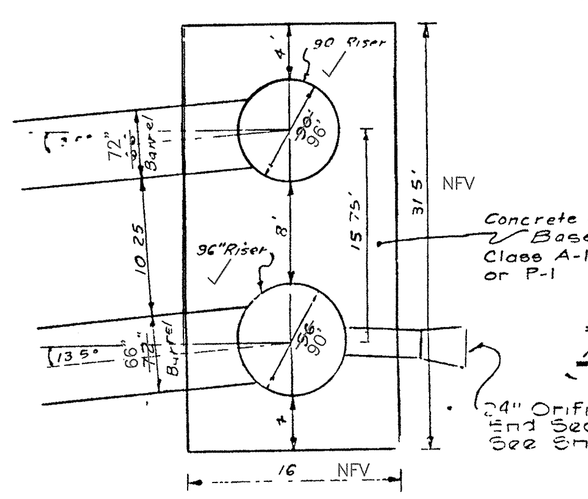

PLAN VIEW DETAIL
BARREL, RISER, RISER BASE
NO SCALE

DETAIL OF TRASH RACK AND ANTI-VORTEX DEVICE
NO SCALE

24" Orifice Pipe NF
End Section + Trash Rack
See Sheet 3 for Trash Rack detail.

NOTE:
THIS PLAN IS PROVIDED FOR INFORMATION ONLY. ELEVATIONS AND DIMENSIONS HAVE NOT BEEN FIELD VERIFIED. VERTICAL DATUM DOES NOT MATCH DATUM USED FOR PROPOSED CONDITIONS.

Barrel Outfall Condition

Storm	Q cfs	Barrel Velocity fps	Tailwater Depth ft	Channel Velocity fps
2 year	41 ~~45~~	7.50	0.88	1.36
10 year	278 ~~548~~ 453	13.20	3.81	3.83
100 year	~~849~~	14.85	4.28	5.71

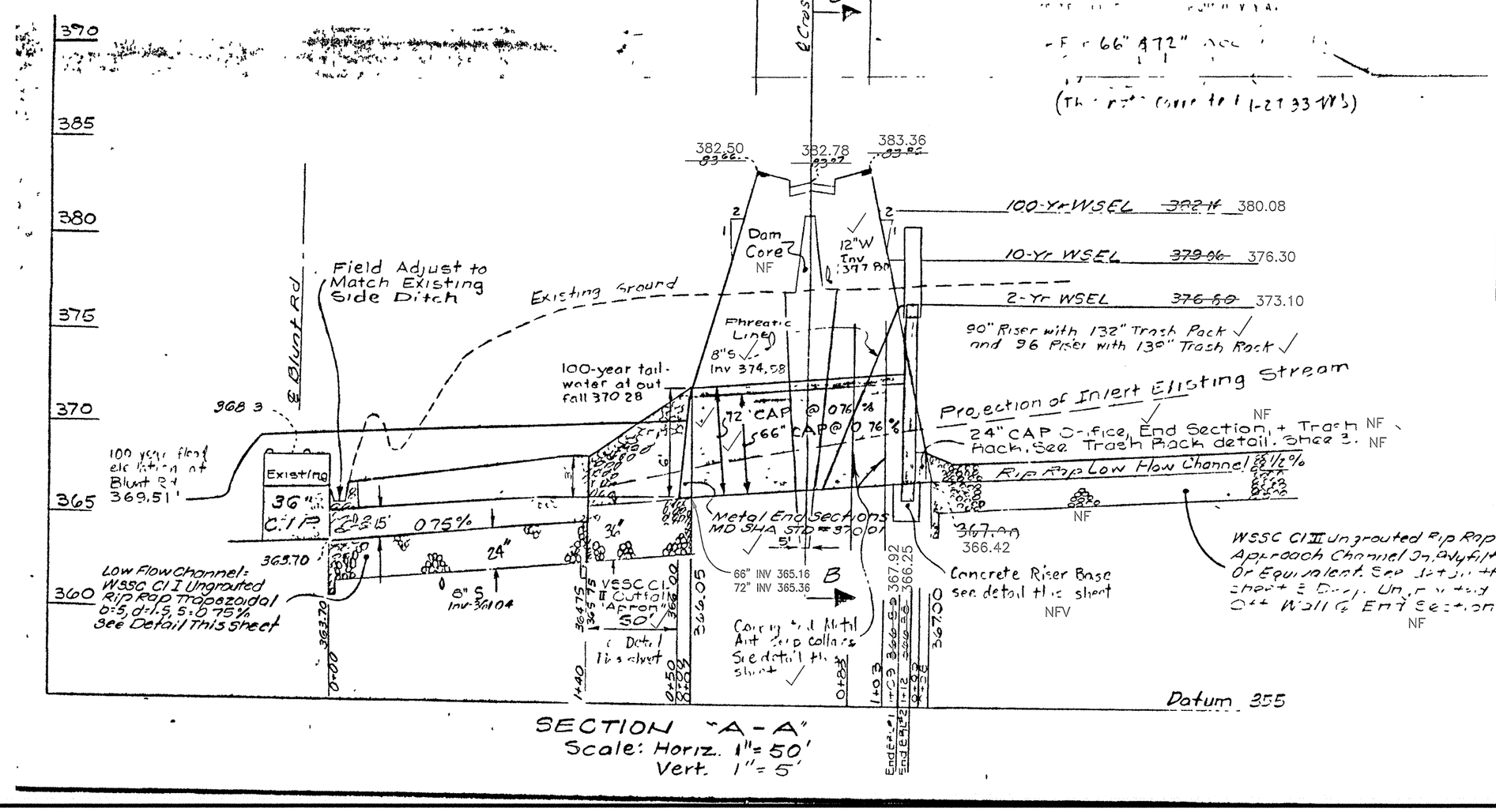

SECTION "A-A"
Scale: Horiz. 1" = 50'
Vert. 1" = 5'

PIPE SCHEDULE				
Pipe		Quantity Length	CAP Corrugated Aluminum Pipe Gage	Corrugation
Orifice 24"		1@ 5'	16	2" x ½"
Riser	90"	1@108'	10	2⅔" x ½"
	96"	1@108'		
Barrel	66"	1@109	10*	3" x 1"
	72"	1@112		
Trash Rack	132"	1@4'9"	10	3" x 1"
	138"	1@4'9"		

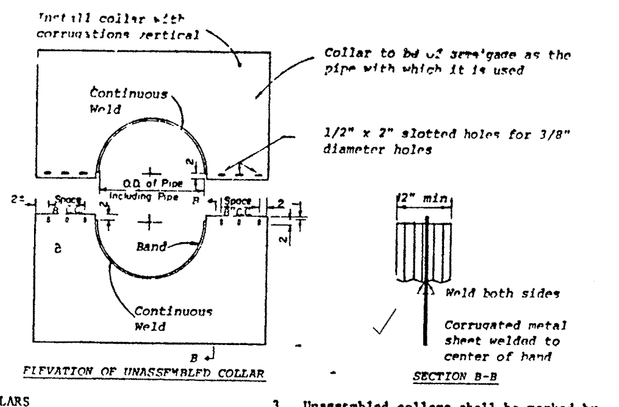

ELEVATION OF UNASSEMBLED COLLAR

SECTION B-B

NOTES FOR COLLARS
1. All materials to be in accordance with construction and construction material specifications
2. When specified on the plans, coating of collars shall be in accordance with construction and construction material specifications
3. Unassembled collars shall be marked by painting or tagging to identify matching pairs.
4. The gap between the two half sections and between the pipe and connecting band shall be caulked with asphalt mastic at time of installation
5. Each collar shall be furnished with two 1/2" diameter rods with standard tank lugs for connecting collars to pipe

DETAILS OF CORRUGATED METAL ANTI-SEEP COLLAR
No Scale

GRAPHIC SCALE
50 0 25 50 100
SCALE: 1" = 50'

Minimum Finished Dimension 66" 12'-8" x 12'-8"
Minimum Finished Projection 3'-7"
Minimum Finished Dimension 13'-2" x 13'-2"
Minimum Finished Projection 72" 3'-7" NFV

No 5010

PRINTED
FEB 14 1983
GREENHORNE & O'MARA, INC.
(ROCKVILLE)

APPROVED
DEPT OF ENVIRONMENTAL PROTECTION
12/12/82
82120017

EXISTING CONDITIONS DETAILS
1983 DESIGN PLAN
REGIONAL STORMWATER MANAGEMENT
POND REPAIR AND RETROFIT (2014)
CHADSWOOD
GERMANTOWN (9th) ELECTION DISTRICT
MONTGOMERY COUNTY, MARYLAND

CPJ Associates
Charles P. Johnson & Associates, Inc.
Civil and Environmental Engineers • Planners • Landscape Architects • Surveyors
1751 Elton Rd., Ste. 300 Silver Spring, MD 20903 301-434-7000 Fax: 301-434-9394
www.cpja.com • Silver Spring, MD • Gaithersburg, MD • College Park, MD • Frederick, MD • Fairfax, VA

CLIENT: MONTGOMERY COUNTY
DEPARTMENT OF ENVIRONMENTAL PROTECTION
255 ROCKVILLE PIKE SUITE 120
ROCKVILLE, MARYLAND 20850
CONTACT: GENE GOPENKO, P.E.
PHONE: (240) 777-7725

COPYRIGHT © LATEST DATE HEREON CHARLES P. JOHNSON & ASSOCIATES, INC. ALL RIGHTS RESERVED, UNAUTHORIZED USE OR REPRODUCTION IS PROHIBITED.

PRELIMINARY PLAN NO:	N/A
SITE PLAN NO:	N/A
DESIGN	JBB
DRAFT	ADG
DATE	JULY, 2014
SCALE	1"=50'
SHEET	4 OF 21
	AB-2 AB-2
FILE NO:	43-274-24.1

Attached Xrefs: _TB22x34 — PUBLIC/TB22x34/06-R-T002/06-V-T001
Last Saved 7/17/2014 Last Plotted 7/17/2014 2:15 PM Sheet N:\43274\DWG\24-01S3-4

D.A. = 323.54 Ac.

CROSS LAUREL DRIVE

CROSS LAUREL COURT

CROSS LAUREL COURT PRIVATE

BLUNT ROAD

SCALE: 1"=20'

SCALE: 1" = 10'

INSET – DIVERSION WALL LOCATION

SCALE: 1"=10'

GRAPHIC SCALE

10 0 5 10 20

SCALE: 1" = 10'

GRAPHIC SCALE

20 0 10 20 40

SCALE: 1" = 20'

MARYLAND STATE PLANE COORDINATES NAD 83 (2011) NAVD88

N 554,850 E 1,247,109

N 554,850 E 1,247,300

N 554,550 E 1,247,100

N 554,550 E 1,247,500

DIVERSION WALL LOCATION

TEMPORARY 36" H.D.P.E. PIPE SLOPE DRAIN

TEMPORARY 27" H.D.P.E. PIPE SLOPE DRAIN

INSET SEE THIS SHEET

EXISTING ACCESS ROAD TO REMAIN. PROVIDE STABILIZED CONSTRUCTION ENTRANCE ALONG ACCESS ROAD. STABILIZED CONSTRUCTION ENTRANCE TO BE RELOCATED PARALLEL TO CROSS LAUREL DRIVE PRIOR TO INSTALLATION OF STORM DRAIN SYSTEM FROM STR. EW2 TO STR. MH2.

PROVIDE SHEETING AND SHORING AROUND EXISTING ELECTRIC METER AND TELECOMMUNICATIONS BOX TO COMPLY WITH OSHA STANDARDS

EXISTING 42" R.C.P. TO BE REMOVED

PROVIDE SHEETING AND SHORING TO COMPLY WITH OSHA STANDARDS

EX. C.M.P. PIPES TO BE SLIPLINED

TEMPORARY LAYDOWN AREA

EXISTING TREES TO REMAIN (PROVIDE PLANKING)

TEMPORARY BRIDGE

STAGING AND STOCKPILING AREA

FILTER BAG TO BE REPLACED AS NEEDED WITH OWNER'S APPROVAL OR AS REQUIRED OWNER OR MCDPS SEDIMENT CONTROL INSPECTOR

EXISTING ACCESS ROAD

PROVIDE OPENING IN RISER DURING SEDIMENT CONTROL PHASE. SEE DETAIL ON SHEETS SWM-4 AND S-1

EXISTING GATE TO BE REMOVED AND REPLACED IN-KIND

REMOVE PORTION OF EX. 18" RCP

EX. 24" RCP

EX. 21" RCP

EX. 42" RCP

EX. 12" W. (CONTRACT 80-4752)

EX. 8" S. (CONTRACT 80-4752)

EX. 8" W. (CONTRACT 80-4752)

EX. 6" S. (CONTRACT 80-4752)

EX. 8" S

EX. 6" W. (CONTRACT 80-4752)

EX. 8" S. (CONTRACT 80-4752)

EX. TBR

EX. REM

EX. 10

EX. 9A

EX. 9

N/F DECESARE, MICHAEL LOT 151, BLOCK A L. 31899 / F. 787

N/F RAHMANI, AZITA R LOT 152, BLOCK A L. 40943 / F. 136

N/F CHADSWOOD HOMEOWNERS ASSOC., INC. PARCEL Q, BLOCK A L. 9259 / F. 756

N/F FINLEY, SCOTT T., K.A. LOT 125, BLOCK A L. 17866 / F. 845

N/F TRINH, THANH LOT 126, BLOCK A L. 36298 / F. 272

N/F MCCOY, AVERY L. & V. C. LOT 127, BLOCK A L. 14521 / F. 259

N/F MORILLO, ANDRES & TERESA LOT 153, BLOCK A L. 31899 / F. 787

N/F RABINOWITZ, MICHAEL & MONICA R. LOT 154, BLOCK A L. 29252 / F. 613

N/F LAM, CHUNWEI J. & ZHOU DONG LOT 3, BLOCK B L. 39566 / F. 063

N/F ESTRELLA, BALAGTAS V. LOT 2, BLOCK B L. 19320 / F. 738

N/F EARLY, EVE T. LOT 1, BLOCK B L. 47235 / F. 063

N/F CASTEBLANCO, ROMAN A. LOT 4, BLOCK B L. 39648 / F. 133

N/F MUNRO, DONALD D. 4TH & YOUNG N. LOT 5, BLOCK B L. 33719 / F. 610

N/F CHADSWOOD HOMEOWNERS ASSOC., INC. PARCEL A, BLOCK B L. 9259 / F. 755

PARCEL O CHADSWOOD P.No. 13622

PARCEL P CHADSWOOD P.No. 13622

16837 369 544 28" OAK

FOR SEDIMENT CONTROL ONLY

TOTAL DISTURBED AREA= 0.76 Ac.

MISS UTILITY

Call "Miss Utility" at 1-800-257-7777, 48 hours prior to the start of work. The excavator must notify all public utility companies with underground facilities in the area of proposed excavation and have those facilities located by the utility companies prior to commencing excavation. The excavator is responsible for compliance with requirements of Chapter 36A of the Montgomery County Code.

GENERAL NOTES:

1. THIS PLAN SHALL ONLY BE USED FOR CONSTRUCTION OF SEDIMENT CONTROL AND ASSOCIATED SEDIMENT CONTROL IMPROVEMENTS AS SHOWN. THIS PLAN SHALL NOT BE USED FOR ANY OTHER CONSTRUCTION PURPOSE. THIS PLAN SHALL NOT BE USED FOR GRADING OF THE SITE.
2. THE GRADING SHOWN AS PROPOSED ON THIS PLAN IS FOR SEDIMENT CONTROL AND CONSTRUCTION ACCESS PURPOSES ONLY. THIS GRADING SHALL BE CONSIDERED INCIDENTAL TO THE PROJECT AND WILL NOT BE COMPENSATED FOR. SEE DRAWING SWM-2 FOR FINAL GRADING.
3. TEMPORARY 36" H.D.P.E. DIVERSION PIPE TO BE PROVIDED BY THE OWNER. CONTRACTOR IS TO PICK UP PIPE FROM OWNER'S STORAGE SITE AND RETURN TO SAME SITE AT THE END OF THE PROJECT.

STATE OF MARYLAND — SURVEY BRIAN E. LEWIS — PROFESSIONAL ENGINEER — 32457 — 10 October 2014

PROFESSIONAL CERTIFICATION

I HEREBY CERTIFY THAT THESE DOCUMENTS WERE PREPARED OR APPROVED BY ME, AND THAT I AM A DULY LICENSED PROFESSIONAL ENGINEER UNDER THE LAWS OF THE STATE OF MARYLAND.

LICENSE # 32457

EXPIRATION DATE: 06/20/2016

MONTGOMERY COUNTY DEPARTMENT OF PERMITTING SERVICES APPROVED FOR:

Stormwater Management:	Sediment Control Technical Requirements:	Administrative Requirements:
SEDIMENT CONTROL REVIEW ONLY	M Lewis 5/19/14 Reviewed Date	M Lewis 5/19/14 Reviewed Date
Reviewed Date	Approved 5/19/2014 Date	259755 SEDIMENT CONTROL PERMIT No.
Approved Date		
1007 REG S.M.File No.		

NOTE: MCDPS APPROVAL DOES NOT NEGATE THE NEED OF A MCDPS ACCESS PERMIT.

MCDPS APPROVAL OF THIS PLAN WILL EXPIRE ONE YEAR FROM THE DATE OF APPROVAL IF THE PROJECT HAS NOT STARTED, UNLESS THE PERMIT HAS BEEN EXTENDED.

SEDIMENT CONTROL PLAN VIEW

REGIONAL STORMWATER MANAGEMENT POND REPAIR AND RETROFIT (2014)

CHADSWOOD

GERMANTOWN (9th) ELECTION DISTRICT
MONTGOMERY COUNTY, MARYLAND

CPJ Associates — Charles P. Johnson & Associates, Inc.
Civil and Environmental Engineers • Planners • Landscape Architects • Surveyors
1751 Elton Rd., Ste. 300 Silver Spring, MD 20903 301-434-7000 Fax: 301-434-9394
www.cpja.com • Silver Spring, MD • Gaithersburg, MD • College Park, MD • Frederick, MD • Fairfax, VA

CLIENT: MONTGOMERY COUNTY DEPARTMENT OF ENVIRONMENTAL PROTECTION 255 ROCKVILLE PIKE SUITE 120 ROCKVILLE, MARYLAND 20850 CONTACT: GENE GOPENKO, P.E. PHONE:(240) 777-7725

COPYRIGHT © LATEST DATE HEREON CHARLES P. JOHNSON & ASSOCIATES, INC. ALL RIGHTS RESERVED, UNAUTHORIZED USE OR REPRODUCTION IS PROHIBITED.

PRELIMINARY PLAN NO:	N/A
SITE PLAN NO:	N/A
DESIGN	JBB
DRAFT	ADG
DATE	JULY, 2014
SCALE	AS-SHOWN
SHEET	5 OF 21
	SC-3 SC-5
FILE NO :	43-274-24.1

Department of Permitting Services
Land Development Division
255 Rockville Pike, 2nd Floor
Rockville, MD 20850-4166
Phone: 311 in Montgomery County or (240)-777-0311
Fax (240)-777-6339
http://www.montgomerycountymd.gov/permittingservices/

DPS

STANDARD EROSION AND SEDIMENT CONTROL NOTES

1. The permittee shall notify the Department of Permitting Services (DPS) forty-eight (48) hours before commencing any land disturbing activity and, unless waived by the Department, shall be required to hold a pre-construction meeting between them or their representative, their engineer and an authorized representative of the Department.

2. The permittee must obtain inspection and approval by DPS at the following points:

   A. At the required pre-construction meeting.

   B. Following installation of sediment control measures and prior to any other land disturbing activity.

   C. During the installation of a sediment basin or stormwater management structure at the required inspection points (see Inspection Checklist on plan). Notification prior to commencing construction is mandatory.

   D. Prior to removal or modification of any sediment control structure(s).

   E. Prior to final acceptance.

3. The permittee shall construct all erosion and sediment control measures per the approved plan and construction sequence, shall have them inspected and approved by the Department prior to beginning any other land disturbances, shall ensure that all runoff from disturbed areas is directed to the sediment control devices, and shall not remove any erosion or sediment control measure without prior permission from the Department.

4. The permittee shall protect all points of construction ingress and egress to prevent the deposition of materials onto traversed public thoroughfare(s). All materials deposited onto public thoroughfare(s) shall be removed immediately.

5. The permittee shall inspect periodically and maintain continuously in effective operating condition, all erosion and sediment control measures until such time as they are removed with prior permission from the Department. The permittee is responsible for immediately repairing or replacing any sediment control measures which have been damaged or removed by the permittee or any other person.

6. Following initial soil disturbance or re-disturbance, permanent or temporary stabilization must be completed within:

   a) Three (3) calendar days as to the surface of all perimeter dikes, swales, ditches, perimeter slopes and all slopes steeper than 3 horizontal to 1 vertical (3:1); and

   b) Seven (7) calendar days as to all other disturbed or graded areas on the project site not under active grading.

   All areas disturbed outside of the perimeter sediment control system must be minimized and stabilized immediately. Maintenance must be performed as necessary to ensure continued stabilization.

7. The permittee shall apply sod, seed, and anchored straw mulch, or other approved stabilization measures to all disturbed areas within seven (7) calendar days after stripping and grading activities have ceased on that area. Maintenance shall be performed as necessary to ensure continued stabilization. Active construction areas such as borrow or stockpile areas, roadway improvements, and areas within fifty (50) feet of a building under construction may be exempt from this requirement, provided that erosion and sediment control measures are installed and maintained to protect those areas.

8. Prior to removal of sediment control measures, the permittee shall stabilize all contributory disturbed areas with required soil amendments and topsoil, using sod or an approved permanent seed mixture and an approved anchored mulch. Wood fiber mulch may only be used in seeding season when the slope does not exceed 10% and grading has been done to promote sheet flow drainage. Areas brought to finished grade during the seeding season shall be permanently stabilized within seven (7) calendar days of establishment. When property is brought to finished grade during the months of November through February, and permanent stabilization is found to be impractical, an approved temporary seed and straw anchored mulch shall be applied to disturbed areas. The final permanent stabilization of such property shall be completed prior to the following April 15.

9. The site permit, work, materials, approved SC/SM plans, and test reports shall be available at the site for inspection by duly authorized officials of Montgomery County.

10. Surface drainage flows over unstabilized cut and fill slopes shall be controlled by either preventing drainage flows from traversing the slopes or by installing mechanical devices to lower the water down slope without causing erosion. Dikes shall be installed and maintained at the top of cut or fill slopes until the slope and drainage area to it are fully stabilized, at which time they must be removed and final grading done to promote sheet flow drainage. Mechanical devices must be provided at points of concentrated flow where erosion is likely to occur.

11. Permanent swales or other points of concentrated water flow shall be stabilized within 3 calendar days of establishment with sod or seed with an approved erosion control matting or by other approved stabilization measures.

12. Sediment control devices shall be removed, with permission of the Department, within thirty (30) calendar days following establishment of permanent stabilization in all contributory drainage areas. Stormwater management structures used temporarily for sediment control shall be converted to the permanent configuration within this time period as well.

13. No permanent cut or fill slope with a gradient steeper than 3:1 will be permitted in lawn maintenance areas or on residential lots. A slope gradient of up to 2:1 will be permitted in non-maintenance areas provided that those areas are indicated on the erosion and sediment control plan with a low-maintenance ground cover specified for permanent stabilization. Slope gradient steeper than 2:1 will not be permitted with vegetative stabilization.

14. The permittee shall install a splashblock at the bottom of each downspout unless the downspout is connected by a drain line to an acceptable outlet.

15. For finished grading, the permittee shall provide adequate gradients so as to prevent water from standing on the surface of lawns more than twenty-four (24) hours after the end of a rainfall, except in designated drainage courses and swale flow areas, which may drain as long as forty-eight (48) hours after the end of a rainfall.

16. Sediment traps or basins are not permitted within 20 feet of a building which is existing or under construction. No building may be constructed within 20 feet of a sediment trap or basin.

17. All inlets in non-sump areas shall have asphalt berms installed at the time of base paving establishment.

18. The sediment control inspector has the option of requiring additional sediment control measures, as deemed necessary.

19. All trap elevations are relative to the outlet elevation, which must be on existing undisturbed ground.

20. Vegetative stabilization shall be performed in accordance with the Standards and Specifications for Soil Erosion and Sediment Control.

21. Sediment trap(s)/basin(s) shall be cleaned out and restored to the original dimensions when sediment has accumulated to the point of one-half (1/2) the wet storage depth of the trap/basin (1/4 the wet storage depth for ST-III) or when required by the sediment control inspector.

22. Sediment removed from traps/basins shall be placed and stabilized in approved areas, but not within a floodplain.

23. All sediment basins and traps must be surrounded with a welded wire safety fence. The fence must be at least 42 inches high, have posts spaced no farther apart than 8 feet, have mesh openings no greater the two inches in width and four inches in height, with a minimum of 14 gauge wire. Safety fence must be maintained in good condition at all times.

24. No excavation in the areas of existing utilities is permitted unless their location has been determined. Call "Miss Utility" at 1-800-257-7777, 48 hours prior to the start of work.

25. Off-site spoil or borrow areas must have prior approval by DPS.

26. Sediment trap/basin dewatering for cleanout or repair may only be done with the DPS inspector's permission. The inspector must approve the dewatering method for each application. The following methods may be considered:

   A. Pump discharge may be directed to another on-site sediment trap or basin, provided it is of sufficient volume and the pump intake is floated to prevent agitation or suction of deposited sediments; or

   B. the pump intake may utilize a Removable Pumping Station and must discharge into an undisturbed area through a non-erosive outlet; or

   C. the pump intake may be floated and discharge into a Dirt Bag (12 oz. non-woven fabric), or approved equivalent, located in an undisturbed buffer area.

Remember: Dewatering operation and method must have prior approval by the DPS inspector.

27. The permittee must notify the Department of all utility construction activities within the permitted limits of disturbance prior to the commencement of those activities.

28. Topsoil must be applied to all pervious areas within the limits of disturbance prior to permanent stabilization in accordance with MDE "Standards and Specifications for Soil Preparation, Topsoiling, and Soil Amendments".

B-4-2 STANDARDS AND SPECIFICATIONS FOR SOIL PREPARATION, TOPSOILING, AND SOIL AMENDMENTS

Definition

The process of preparing the soils to sustain adequate vegetative stabilization.

Purpose

To provide a suitable soil medium for vegetative growth.

Conditions Where Practice Applies

Where vegetative stabilization is to be established.

Criteria

A. Soil Preparation
1. Temporary Stabilization
   a. Seedbed preparation consists of loosening soil to a depth of 3 to 5 inches by means of suitable agricultural or construction equipment, such as disc harrows or chisel plows or rippers mounted on construction equipment. After the soil is loosened, it must not be rolled or dragged smooth but left in the roughened condition. Slopes 3:1 or flatter are to be tracked with ridges running parallel to the contour of the slope.
   b. Apply fertilizer and lime as prescribed on the plans.
   c. Incorporate lime and fertilizer into the top 3 to 5 inches of soil by disking or other suitable means.
2. Permanent Stabilization
   a. A soil test is required for any earth disturbance of 5 acres or more. The minimum soil conditions required for permanent vegetative establishment are:
      i. Soil pH between 6.0 and 7.0.
      ii. Soluble salts less than 500 parts per million (ppm).
      iii. Soil contains less than 40 percent clay but enough fine grained material (greater than 30 percent silt plus clay) to provide the capacity to hold a moderate amount of moisture. An exception: if lovegrass will be planted, then a sandy soil (less than 30 percent silt plus clay) would be acceptable.
      iv. Soil contains 1.5 percent minimum organic matter by weight.
      v. Soil contains sufficient pore space to permit adequate root penetration.
   b. Application of amendments or topsoil is required if on-site soils do not meet the above conditions.
   c. Graded areas must be maintained in a true and even grade as specified on the approved plan, then scarified or otherwise loosened to a depth of 3 to 5 inches.
   d. Apply soil amendments as specified on the approved plan or as indicated by the results of a soil test.
   e. Mix soil amendments into the top 3 to 5 inches of soil by disking or other suitable means. Rake lawn areas to smooth the surface, remove large objects like stones and branches, and ready the area for seed application. Loosen surface soil by dragging with a heavy chain or other equipment to roughen the surface where site conditions will not permit normal seedbed preparation. Track slopes 3:1 or flatter with tracked equipment leaving the soil in an irregular condition with ridges running parallel to the contour of the slope. Leave the top 1 to 3 inches of soil loose and friable. Seedbed loosening may be unnecessary on newly disturbed areas.

B. Topsoiling
1. Topsoil is placed over prepared subsoil prior to establishment of permanent vegetation. The purpose is to provide a suitable soil medium for vegetative growth. Soils of concern have low moisture content, low nutrient levels, low pH, materials toxic to plants, and/or unacceptable soil gradation.
2. Topsoil salvaged from an existing site may be used provided it meets the standards as set forth in these specifications. Typically, the depth of topsoil to be salvaged for a given soil type can be found in the representative soil profile section in the Soil Survey published by USDA-NRCS.
3. Topsoiling is limited to areas having 2:1 or flatter slopes where:
   a. The texture of the exposed subsoil/parent material is not adequate to produce vegetative growth.
   b. The soil material is so shallow that the rooting zone is not deep enough to support plants or furnish continuing supplies of moisture and plant nutrients.
   c. The original soil to be vegetated contains material toxic to plant growth.
   d. The soil is so acidic that treatment with limestone is not feasible.
4. Areas having slopes steeper than 2:1 require special consideration and design.
5. Topsoil Specifications: Soil to be used as topsoil must meet the following criteria:
   a. Topsoil must be a loam, sandy loam, clay loam, silt loam, sandy clay loam, or loamy sand. Other soils may be used if recommended by an agronomist or soil scientist and approved by the appropriate approval authority. Topsoil must not be a mixture of contrasting textured subsoils and must contain less than 5 percent by volume of cinders, stones, slag, coarse fragments, gravel, sticks, roots, trash, or other materials larger than 1½ inches in diameter.
   b. Topsoil must be free of noxious plants or plant parts such as Bermuda grass, quack grass, Johnson grass, nut sedge, poison ivy, thistle, or others as specified.
   c. Topsoil substitutes or amendments, as recommended by a qualified agronomist or soil scientist and approved by the appropriate approval authority, may be used in lieu of natural topsoil.
6. Topsoil Application
   a. Erosion and sediment control practices must be maintained when applying topsoil.
   b. Uniformly distribute topsoil in a 5 to 8 inch layer and lightly compact to a minimum thickness of 4 inches. Spreading is to be performed in such a manner that sodding or seeding can proceed with a minimum of additional soil preparation and tillage. Any irregularities in the surface resulting from topsoiling or other operations must be corrected in order to prevent the formation of depressions or water pockets.
   c. Topsoil must not be placed if the topsoil or subsoil is in a frozen or muddy condition, when the subsoil is excessively wet or in a condition that may otherwise be detrimental to proper grading and seedbed preparation.

C. Soil Amendments (Fertilizer and Lime Specifications)
1. Soil tests must be performed to determine the exact ratios and application rates for both lime and fertilizer on sites having disturbed areas of 5 acres or more. Soil analysis may be performed by a recognized private or commercial laboratory. Soil samples taken for engineering purposes may also be used for chemical analyses.
2. Fertilizers must be uniform in composition, free flowing and suitable for accurate application by appropriate equipment. Manure may be substituted for fertilizer with prior approval from the appropriate approval authority. Fertilizers must all be delivered to the site fully labeled according to the applicable laws and must bear the name, trade name or trademark and warranty of the producer.
3. Lime materials must be ground limestone (hydrated or burnt lime may be substituted except when hydroseeding) which contains at least 50 percent total oxides (calcium oxide plus magnesium oxide). Limestone must be ground to such fineness that at least 50 percent will pass through a #100 mesh sieve and 98 to 100 percent will pass through a #20 mesh sieve.
4. Lime and fertilizer are to be evenly distributed and incorporated into the top 3 to 5 inches of soil by disking or other suitable means.
5. Where the subsoil is either highly acidic or composed of heavy clays, spread ground limestone at the rate of 4 to 8 tons/acre (200–400 pounds per 1,000 square feet) prior to the placement of topsoil.

TEMPORARY PIPE SLOPE DRAIN SCHEDULE		
27"	CORRUGATED H.D.P.E.	62 LF
36"	CORRUGATED H.D.P.E.	142 LF

GENERAL NOTES:
1. THIS PLAN SHALL ONLY BE USED FOR CONSTRUCTION OF SEDIMENT CONTROL AND ASSOCIATED SEDIMENT CONTROL IMPROVEMENTS AS SHOWN. THIS PLAN SHALL NOT BE USED FOR ANY OTHER CONSTRUCTION PURPOSE. THIS PLAN SHALL NOT BE USED FOR GRADING OF THE SITE.

MISS UTILITY

Call "Miss Utility" at 1-800-257-7777, 48 hours prior to the start of work. The excavator must notify all public utility companies with underground facilities in the area of proposed excavation and have those facilities located by the utility companies prior to commencing excavation. The excavator is responsible for compliance with requirements of Chapter 36A of the Montgomery County Code.

B-4-5 STANDARDS AND SPECIFICATIONS FOR PERMANENT STABILIZATION

Definition
To stabilize disturbed soils with permanent vegetation.

Purpose
To use long-lived perennial grasses and legumes to establish permanent ground cover on disturbed soils.

Conditions Where Practice Applies
Exposed soils where ground cover is needed for 6 months or more.

Criteria
A. Seed Mixtures
1. General Use
   i. Select one or more of the species or mixtures listed in Table B.3 for the appropriate Plant Hardiness Zone (from Figure B.3) and based on the site condition or purpose found on Table B.2. Enter selected mixture(s), application rates, and seeding dates in the Permanent Seeding Summary. The Summary is to be placed on the plan.
   ii. Additional planting specifications for exceptional sites such as shorelines, stream banks, or dunes or for special purposes such as wildlife or aesthetic treatment may be found in USDA-NRCS Technical Field Office Guide, Section 342 - Critical Area Planting.
   iii. For sites having disturbed area over 5 acres, use and show the rates recommended by the soil testing agency.
   iv. For areas receiving low maintenance, apply urea form fertilizer (46-0-0) at 3½ pounds per 1000 square feet (150 pounds per acre) at the time of seeding in addition to the soil amendments shown in the Permanent Seeding Summary.
2. Turfgrass Mixtures
   i. Areas where turfgrass may be desired include lawns, parks, playgrounds, and commercial sites which will receive a medium to high level of maintenance.
   ii. Select one or more of the species or mixtures listed below based on the site conditions or purpose. Enter selected mixture(s), application rates, and seeding dates in the Permanent Seeding Summary. The summary is to be placed on the plan.
1. Kentucky Bluegrass: Full Sun Mixture: For use in areas that receive intensive management. Irrigation required in the areas of central Maryland and Eastern Shore. Recommended Certified Kentucky Bluegrass Cultivars Seeding Rate: 1.5 to 2.0 pounds per 1000 square feet. Choose a minimum of three Kentucky bluegrass cultivars with each ranging from 10 to 35 percent of the total mixture by weight.
2. Kentucky Bluegrass/Perennial Rye: Full Sun Mixture: For use in full sun areas where B.22 rapid establishment is necessary and when turf will receive medium to intensive management. Certified Perennial Ryegrass Cultivars/Certified Kentucky Bluegrass Seeding Rate: 2 pounds mixture per 1000 square feet. Choose a minimum of three Kentucky bluegrass cultivars with each ranging from 10 to 35 percent of the total mixture by weight.
3. Tall Fescue/Kentucky Bluegrass: Full Sun Mixture: For use in drought prone areas and/or for areas receiving low to medium management in full sun to medium shade. Recommended mixture includes; Certified Tall Fescue Cultivars 95 to 100 percent, Certified Kentucky Bluegrass Cultivars 0 to 5 percent. Seeding Rate: 5 to 8 pounds per 1000 square feet. One or more cultivars may be blended.
4. Kentucky Bluegrass/Fine Fescue: Shade Mixture: For use in areas with shade in Bluegrass lawns. For establishment in high quality, intensively managed turf area. Mixture includes; Certified Kentucky Bluegrass Cultivars 30 to 40 percent and Certified Fine Fescue and 60 to 70 percent. Seeding Rate: 1½ to 3 pounds per 1000 square feet.

Notes:
Select turfgrass varieties from those listed in the most current University of Maryland Publication, Agronomy Memo #77, "Turfgrass Cultivar Recommendations for Maryland"

Choose certified material. Certified material is the best guarantee of cultivar purity. The certification program of the Maryland Department of Agriculture, Turf and Seed Section, provides a reliable means of consumer protection and assures a pure genetic line

iii. Ideal Times of Seeding for Turf Grass Mixtures

- Western MD: March 15 to June 1, August 1 to October 1 (Hardiness Zones: 5b, 6a)
- Central MD: March 1 to May 15, August 15 to October 15 (Hardiness Zone: 6b)
- Southern MD, Eastern Shore: March 1 to May 15, August 15 to October 15 (Hardiness Zones: 7a, 7b)

   iv. Till areas to receive seed by disking or other approved methods to a depth of 2 to 4 inches, level and rake the areas to prepare a proper seedbed. Remove stones and debris over 1½ inches in diameter. The resulting seedbed must be in such condition that future mowing of grasses will pose no difficulty.
   v. If soil moisture is deficient, supply new seedings with adequate water for plant growth (½ to 1 inch every 3 to 4 days depending on soil texture) until they are firmly established. This is especially true when seedings are made late in the planting season, in abnormally dry or hot seasons, or on adverse sites.

Permanent Seeding Summary

Hardiness Zone (from Figure B.3)				6b				
Seed Mixture (from Table B.3)				3				
No.	Species	Application Rate (lb/ac)	Seeding Dates	Seeding Depths	N	P_2O_5	K_2O	Lime Rate
1	Deertongue	20	March 1 to May 15, Aug. 15 to Oct. 15	¼"-½"				
2	Canada Wild Rye	3	March 1 to May 15, Aug. 15 to Oct. 15	¼"-½"	45 pounds per acre (1.0lb / 1000sf)	90 pounds per acre (2lb / 1000sf)	90 pounds per acre (2lb / 1000sf)	2 tons per acre (90lb / 1000sf)
3	Common Lespedeza	10	March 1 to May 15, Aug. 15 to Oct. 15	¼"-½"				

Sod: To provide quick cover on disturbed areas (2:1 grade or flatter).
1. General Specifications
   i. Class of turfgrass sod must be Maryland State Certified. Sod labels must be made available to the job foreman and inspector.
   ii. Sod must be machine cut at a uniform soil thickness of ¾ inch, plus or minus ¼ inch, at the time of cutting. Measurement for thickness must exclude top growth and thatch. Broken pads and torn or uneven ends will not be acceptable.
   iii. Standard size sections of sod must be strong enough to support their own weight and retain their size and shape when suspended vertically with a firm grasp on the upper 10 percent of the section.
   iv. Sod must not be harvested or transplanted when moisture content (excessively dry or wet) may adversely affect its survival.
   v. Sod must be harvested, delivered, and installed within a period of 36 hours. Sod not transplanted within this period must be approved by an agronomist or soil scientist prior to its installation.
2. Sod Installation
   i. During periods of excessively high temperature or in areas having dry subsoil, lightly irrigate the subsoil immediately prior to laying the sod.
   ii. Lay the first row of sod in a straight line with subsequent rows placed parallel to it and tightly wedged against each other. Stagger lateral joints to promote more uniform growth and strength. Ensure that sod is not stretched or overlapped and that all joints are butted tight in order to prevent voids which would cause air drying of the roots.
   iii. Wherever possible, lay sod with the long edges parallel to the contour and with staggering joints. Roll and tamp, peg or otherwise secure the sod to prevent slippage on slopes. Ensure solid contact exists between sod roots and the underlying soil surface.
   iv. Water the sod immediately following rolling and tamping until the underside of the new sod pad and soil surface below the sod are thoroughly wet. Complete the operations of laying, tamping and irrigating for any piece of sod within eight hours.
3. Sod Maintenance
   i. In the absence of adequate rainfall, water daily during the first week or as often and sufficiently as necessary to maintain moist soil to a depth of 4 inches. Water sod during the heat of the day to prevent wilting.
   ii. After the first week, sod watering is required as necessary to maintain adequate moisture content.
   iii. Do not mow until the sod is firmly rooted. No more than ⅓ of the grass leaf must be removed by the initial cutting or subsequent cuttings. Maintain a grass height of at least 3 inches unless otherwise specified.

DETAIL E-1 SILT FENCE

STANDARD SYMBOL —SF—

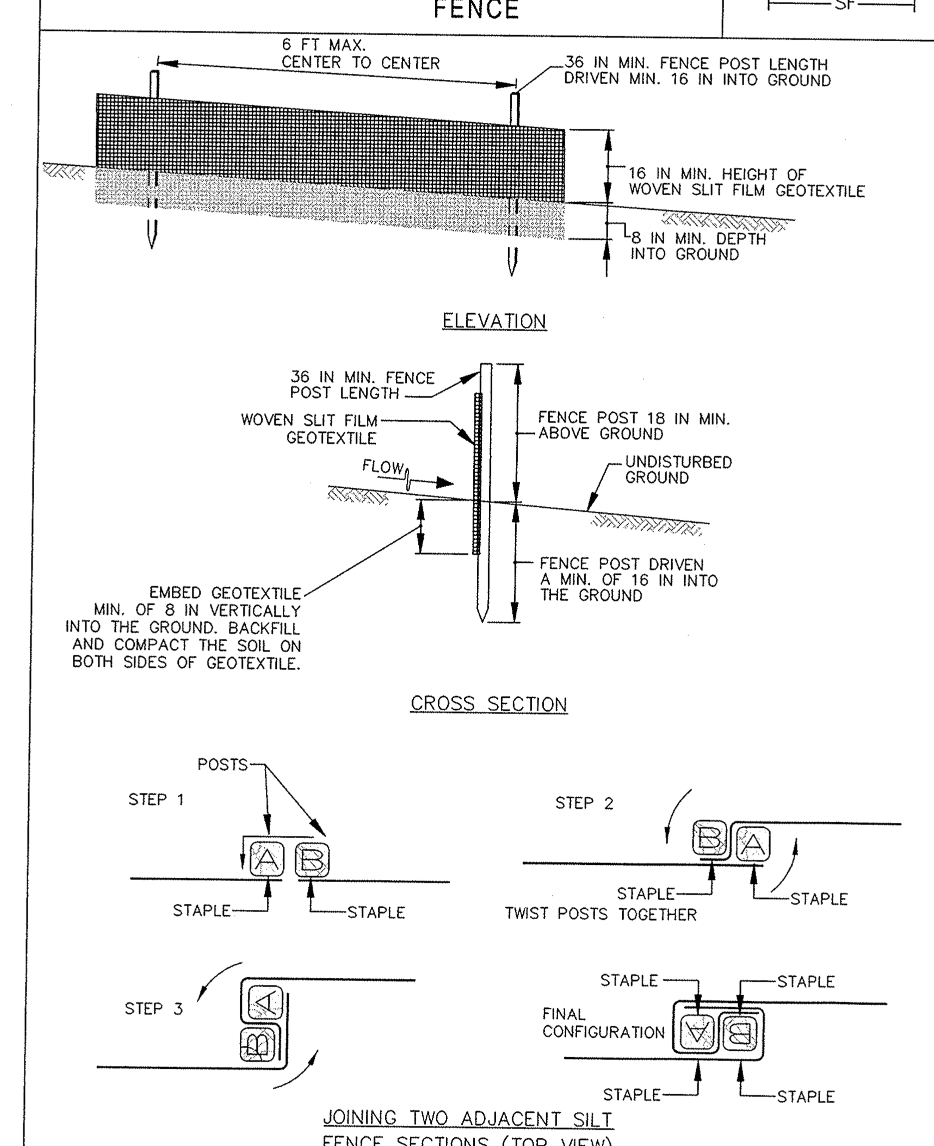

1 OF 2

MARYLAND STANDARDS AND SPECIFICATIONS FOR SOIL EROSION AND SEDIMENT CONTROL

U.S. DEPARTMENT OF AGRICULTURE NATURAL RESOURCES CONSERVATION SERVICE	2011	MARYLAND DEPARTMENT OF ENVIRONMENT WATER MANAGEMENT ADMINISTRATION

DETAIL E-1 SILT FENCE

STANDARD SYMBOL —SF—

CONSTRUCTION SPECIFICATIONS

1. USE WOOD POSTS 1¾ X 1¾ ± ⅙ INCH (MINIMUM) SQUARE CUT OF SOUND QUALITY HARDWOOD. AS AN ALTERNATIVE TO WOODEN POST USE STANDARD "T" OR "U" SECTION STEEL POSTS WEIGHING NOT LESS THAN 1 POUND PER LINEAR FOOT.
2. USE 36 INCH MINIMUM POSTS DRIVEN 16 INCH MINIMUM INTO GROUND NO MORE THAN 6 FEET APART.
3. USE WOVEN SLIT FILM GEOTEXTILE AS SPECIFIED IN SECTION H-1 MATERIALS AND FASTEN GEOTEXTILE SECURELY TO UPSLOPE SIDE OF FENCE POSTS WITH WIRE TIES OR STAPLES AT TOP AND MID-SECTION.
4. PROVIDE MANUFACTURER CERTIFICATION TO THE AUTHORIZED REPRESENTATIVE OF THE INSPECTION/ENFORCEMENT AUTHORITY SHOWING THAT THE GEOTEXTILE USED MEETS THE REQUIREMENTS IN SECTION H-1 MATERIALS.
5. EMBED GEOTEXTILE A MINIMUM OF 8 INCHES VERTICALLY INTO THE GROUND. BACKFILL AND COMPACT THE SOIL ON BOTH SIDES OF FABRIC.
6. WHERE TWO SECTIONS OF GEOTEXTILE ADJOIN: OVERLAP, TWIST, AND STAPLE TO POST IN ACCORDANCE WITH THIS DETAIL.
7. EXTEND BOTH ENDS OF THE SILT FENCE A MINIMUM OF FIVE HORIZONTAL FEET UPSLOPE AT 45 DEGREES TO THE MAIN FENCE ALIGNMENT TO PREVENT RUNOFF FROM GOING AROUND THE ENDS OF THE SILT FENCE.
8. REMOVE ACCUMULATED SEDIMENT AND DEBRIS WHEN BULGES DEVELOP IN SILT FENCE OR WHEN SEDIMENT REACHES 25% OF FENCE HEIGHT. REPLACE GEOTEXTILE IF TORN. IF UNDERMINING OCCURS, REINSTALL FENCE.

2 OF 2

MARYLAND STANDARDS AND SPECIFICATIONS FOR SOIL EROSION AND SEDIMENT CONTROL

U.S. DEPARTMENT OF AGRICULTURE NATURAL RESOURCES CONSERVATION SERVICE	2011	MARYLAND DEPARTMENT OF ENVIRONMENT WATER MANAGEMENT ADMINISTRATION

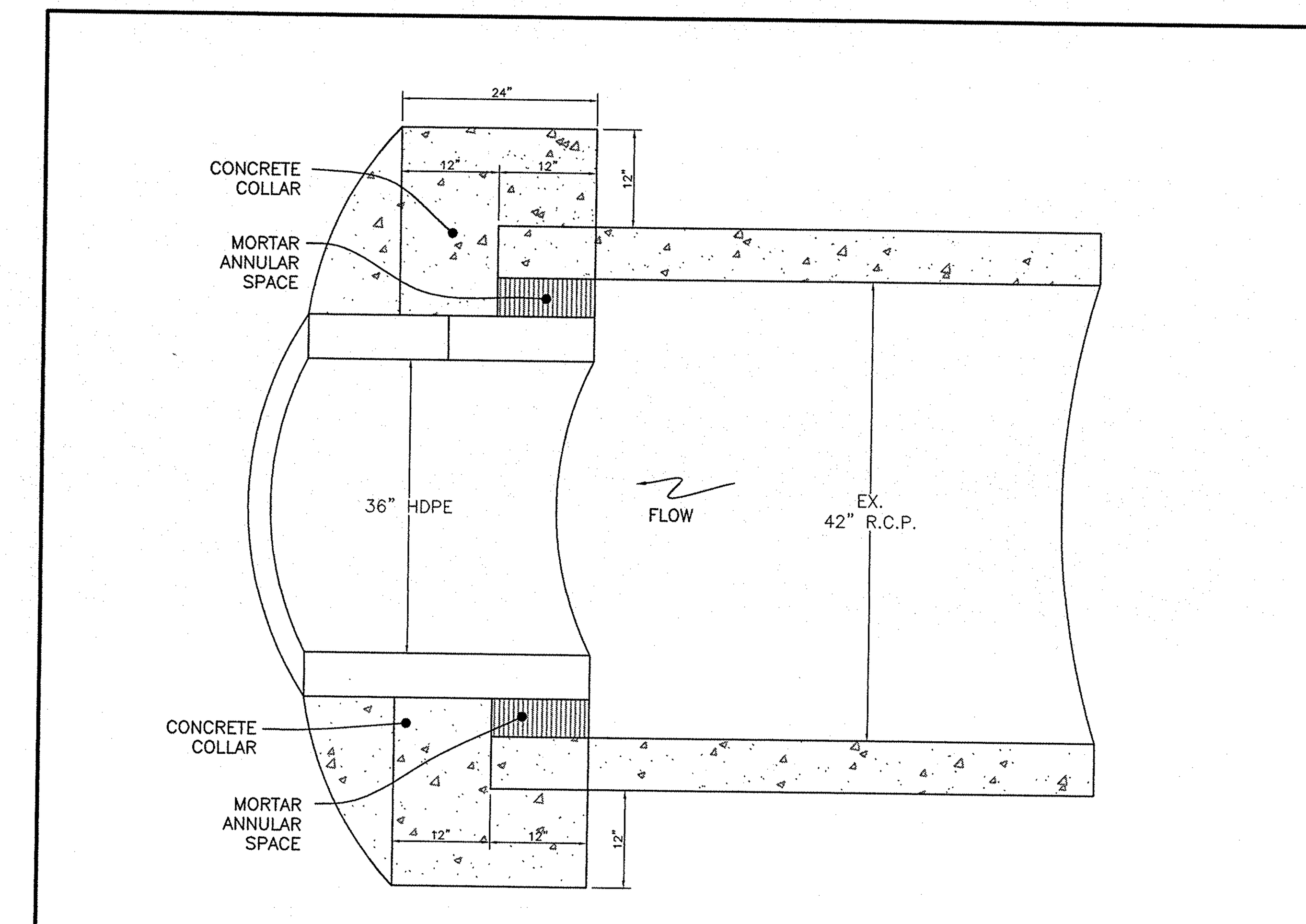

36" H.D.P.E. DIVERSION PIPE CONNECTION TO EX. 42" R.C.P. DETAIL
N.T.S.

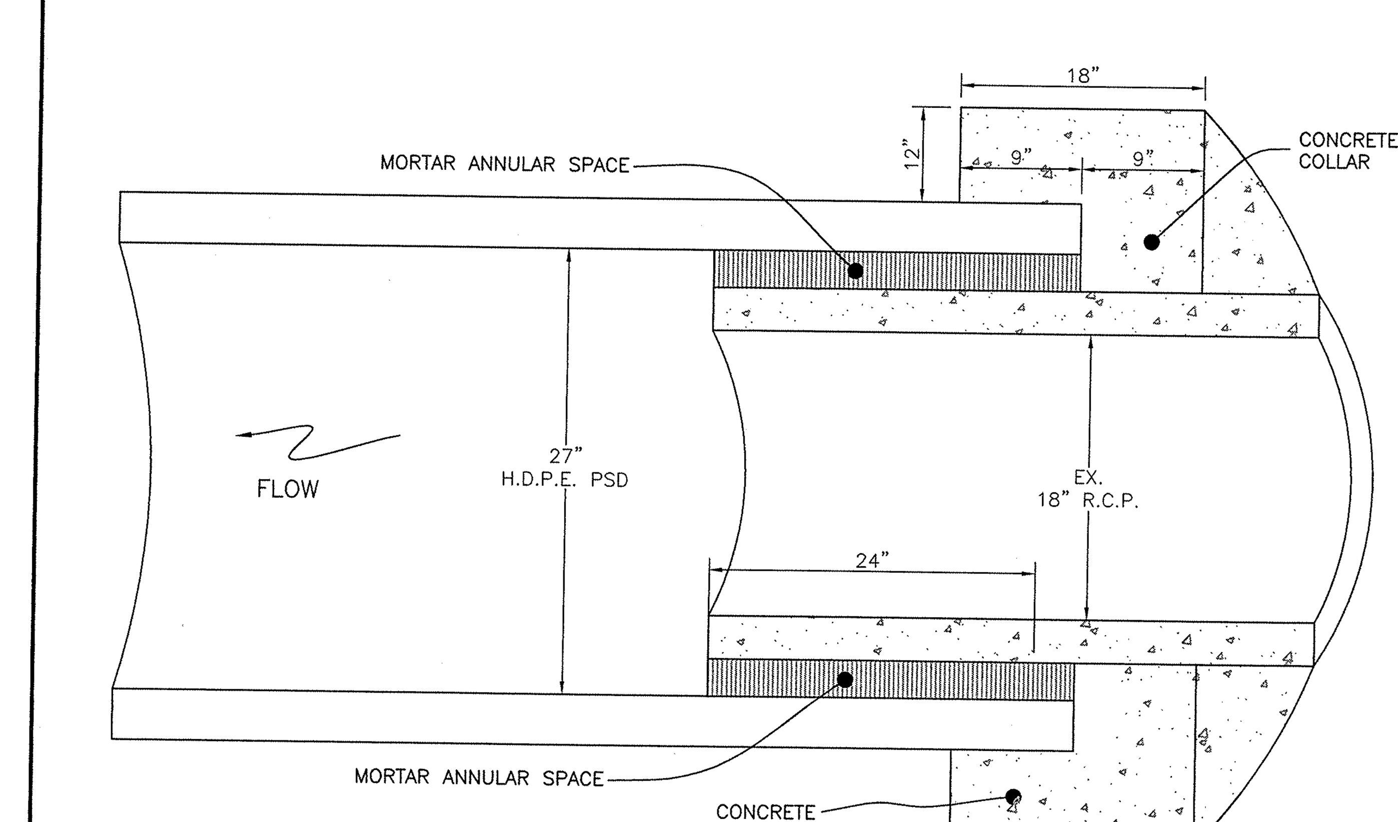

27" H.D.P.E. DIVERSION PIPE CONNECTION TO EX. 21" R.C.P. DETAIL
N.T.S.

FOR SEDIMENT CONTROL ONLY

PROFESSIONAL CERTIFICATION
I HEREBY CERTIFY THAT THESE DOCUMENTS WERE PREPARED OR APPROVED BY ME, AND THAT I AM A DULY LICENSED PROFESSIONAL ENGINEER UNDER THE LAWS OF THE STATE OF MARYLAND.
LICENSE #: 32457
EXPIRATION DATE: 06/20/2016

MONTGOMERY COUNTY DEPARTMENT OF PERMITTING SERVICES APPROVED FOR:

Stormwater Management:
SEDIMENT CONTROL REVIEW ONLY
Reviewed ____ Date
Approved ____ Date
1007 REG
S.M.File No.

Sediment Control Technical Requirements:
Reviewed 5/19/14 Date
Approved 5/19/2014 Date

NOTE: MCDPS APPROVAL DOES NOT NEGATE THE NEED OF A MCDPS ACCESS PERMIT.

Administrative Requirements:
Reviewed 5/19/14 Date
259755
SEDIMENT CONTROL PERMIT No.

MCDPS APPROVAL OF THIS PLAN WILL EXPIRE ONE YEAR FROM THE DATE OF APPROVAL, IF THE PROJECT HAS NOT STARTED, UNLESS THE PERMIT HAS BEEN EXTENDED.

SEDIMENT CONTROL NOTES AND DETAILS

REGIONAL STORMWATER MANAGEMENT POND REPAIR AND RETROFIT (2014)

CHADSWOOD

GERMANTOWN (9th) ELECTION DISTRICT
MONTGOMERY COUNTY, MARYLAND

CPJ Associates — Charles P. Johnson & Associates, Inc.
Civil and Environmental Engineers • Planners • Landscape Architects • Surveyors
1751 Elton Rd., Ste. 300 Silver Spring, MD 20903 301-434-7000 Fax: 301-434-9394
www.cpja.com • Silver Spring, MD • Gaithersburg, MD • College Park, MD • Frederick, MD • Fairfax, VA

CLIENT: MONTGOMERY COUNTY DEPARTMENT OF ENVIRONMENTAL PROTECTION
255 ROCKVILLE PIKE SUITE 120
ROCKVILLE, MARYLAND 20850
CONTACT: GENE GOPENKO, P.E.
PHONE:(240) 777-7723

COPYRIGHT © LATEST DATE HEREON CHARLES P. JOHNSON & ASSOCIATES, INC. ALL RIGHTS RESERVED, UNAUTHORIZED USE OR REPRODUCTION IS PROHIBITED.

PRELIMINARY PLAN NO:	SITE PLAN NO:
N/A	N/A
DESIGN JBB	SHEET 6 OF 21
DRAFT ADG	SC-4 / SC-5
DATE JULY, 2014	FILE NO: 43-274-241
SCALE AS-SHOWN	

DETAIL F-2 SUMP PIT

STANDARD SYMBOL: SP

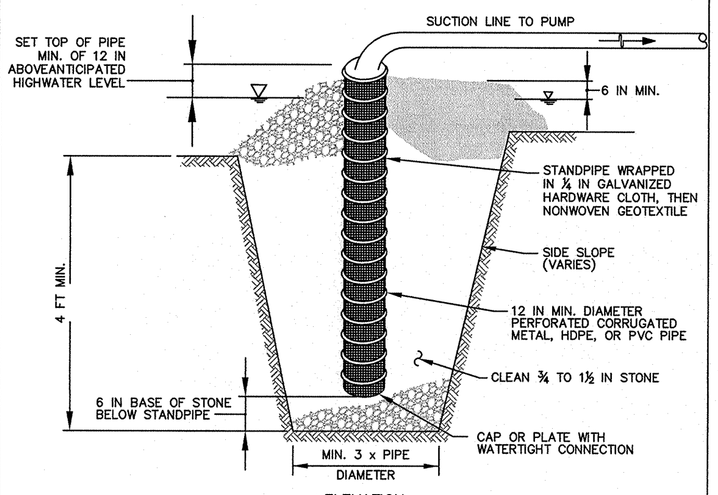

ELEVATION

CONSTRUCTION SPECIFICATIONS

1. USE 12 INCH OR LARGER DIAMETER CORRUGATED METAL, HDPE, OR PVC PIPE WITH 1 INCH DIAMETER PERFORATIONS, 6 INCHES ON CENTER. BOTTOM OF PIPE MUST BE CAPPED WITH WATERTIGHT SEAL.
2. WRAP PIPE WITH ½ INCH GALVANIZED HARDWARE CLOTH AND WRAP NONWOVEN GEOTEXTILE, AS SPECIFIED IN SECTION H-1 MATERIALS, OVER THE HARDWARE CLOTH.
3. EXCAVATE PIT TO THREE TIMES THE PIPE DIAMETER AND FOUR FEET IN DEPTH. PLACE ¾ TO 1½ INCH STONE OR EQUIVALENT RECYCLED CONCRETE, 6 INCHES IN DEPTH PRIOR TO PIPE PLACEMENT.
4. SET TOP OF PIPE MINIMUM 12 INCHES ABOVE ANTICIPATED WATER SURFACE ELEVATION.
5. BACKFILL PIT AROUND THE PIPE WITH ¾ TO 1½ INCH CLEAN STONE OR EQUIVALENT RECYCLED CONCRETE AND EXTEND STONE A MINIMUM OF 6 INCHES ABOVE ANTICIPATED WATER SURFACE ELEVATION.
6. DISCHARGE TO A STABLE AREA AT A NONEROSIVE RATE.
7. A SUMP PIT REQUIRES FREQUENT MAINTENANCE. IF SYSTEM CLOGS, REMOVE PERFORATED PIPE AND REPLACE GEOTEXTILE AND STONE. KEEP POINT OF DISCHARGE FREE OF EROSION.

MARYLAND STANDARDS AND SPECIFICATIONS FOR SOIL EROSION AND SEDIMENT CONTROL

U.S. DEPARTMENT OF AGRICULTURE NATURAL RESOURCES CONSERVATION SERVICE	2011	MARYLAND DEPARTMENT OF ENVIRONMENT WATER MANAGEMENT ADMINISTRATION

DETAIL F-4 FILTER BAG

STANDARD SYMBOL: FB

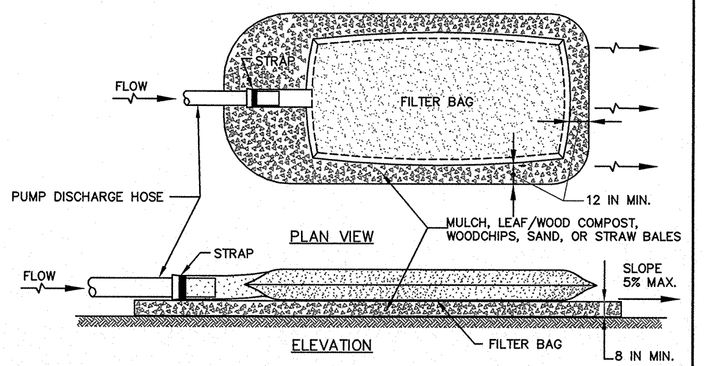

ELEVATION

CONSTRUCTION SPECIFICATIONS

1. TIGHTLY SEAL SLEEVE AROUND THE PUMP DISCHARGE HOSE WITH A STRAP OR SIMILAR DEVICE.
2. PLACE FILTER BAG ON SUITABLE BASE (E.G., MULCH, LEAF/WOOD COMPOST, WOODCHIPS, SAND, OR STRAW BALES) LOCATED ON A LEVEL OR 5% MAXIMUM SLOPING SURFACE. DISCHARGE TO A STABILIZED AREA. EXTEND BASE A MINIMUM OF 12 INCHES FROM EDGES OF BAG.
3. CONTROL PUMPING RATE TO PREVENT EXCESSIVE PRESSURE WITHIN THE FILTER BAG IN ACCORDANCE WITH THE MANUFACTURER RECOMMENDATIONS. AS THE BAG FILLS WITH SEDIMENT, REDUCE PUMPING RATE.
4. REMOVE AND PROPERLY DISPOSE OF FILTER BAG UPON COMPLETION OF PUMPING OPERATIONS OR AFTER BAG HAS REACHED CAPACITY, WHICHEVER OCCURS FIRST. SPREAD THE DEWATERED SEDIMENT FROM THE BAG IN AN APPROVED UPLAND AREA AND STABILIZE WITH SEED AND MULCH BY THE END OF THE WORK DAY. RESTORE THE SURFACE AREA BENEATH THE BAG TO ORIGINAL CONDITION UPON REMOVAL OF THE DEVICE.
5. USE NONWOVEN GEOTEXTILE WITH DOUBLE STITCHED SEAMS USING HIGH STRENGTH THREAD. SIZE SLEEVE TO ACCOMMODATE A MAXIMUM 4 INCH DIAMETER PUMP DISCHARGE HOSE. THE BAG MUST BE MANUFACTURED FROM A NONWOVEN GEOTEXTILE THAT MEETS OR EXCEEDS MINIMUM AVERAGE ROLL VALUES (MARV) FOR THE FOLLOWING:

GRAB TENSILE	250 LB	ASTM D-4632
PUNCTURE	150 LB	ASTM D-4833
FLOW RATE	70 GAL/MIN/FT?	ASTM D-4491
PERMITTIVITY (SEC^{-1})	1.2 SEC^{-1}	ASTM D-4491
UV RESISTANCE	70% STRENGTH @ 500 HOURS	ASTM D-4355
APPARENT OPENING SIZE (AOS)	0.15-0.18 MM	ASTM D-4751
SEAM STRENGTH	90%	ASTM D-4632

6. REPLACE FILTER BAG IF BAG CLOGS OR HAS RIPS, TEARS, OR PUNCTURES. DURING OPERATION KEEP CONNECTION BETWEEN PUMP HOSE AND FILTER BAG WATER TIGHT. REPLACE BEDDING IF IT BECOMES DISPLACED.

MARYLAND STANDARDS AND SPECIFICATIONS FOR SOIL EROSION AND SEDIMENT CONTROL

U.S. DEPARTMENT OF AGRICULTURE NATURAL RESOURCES CONSERVATION SERVICE	2011	MARYLAND DEPARTMENT OF ENVIRONMENT WATER MANAGEMENT ADMINISTRATION

DETAIL E-3 SUPER SILT FENCE

STANDARD SYMBOL: SSF

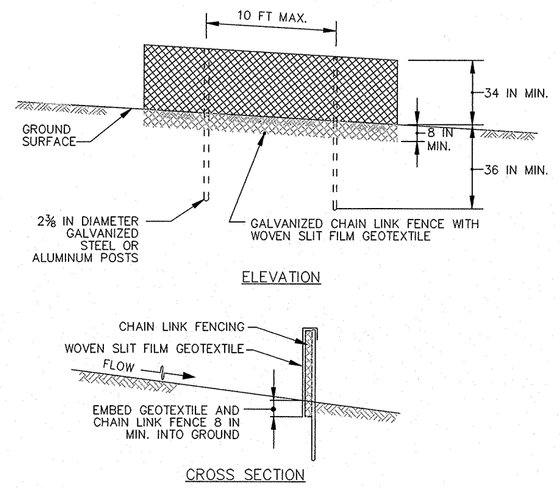

ELEVATION

CROSS SECTION

CONSTRUCTION SPECIFICATIONS

1. INSTALL 2⅜ INCH DIAMETER GALVANIZED STEEL POSTS OF 0.095 INCH WALL THICKNESS AND SIX FOOT LENGTH SPACED NO FURTHER THAN 10 FEET APART. DRIVE THE POSTS A MINIMUM OF 36 INCHES INTO THE GROUND.
2. FASTEN 9 GAUGE OR HEAVIER GALVANIZED CHAIN LINK FENCE (2⅜ INCH MAXIMUM OPENING) 42 INCHES IN HEIGHT SECURELY TO THE FENCE POSTS WITH WIRE TIES OR HUG RINGS.
3. FASTEN WOVEN SLIT FILM GEOTEXTILE AS SPECIFIED IN SECTION H-1 MATERIALS, SECURELY TO THE UPSLOPE SIDE OF CHAIN LINK FENCE WITH TIES SPACED EVERY 24 INCHES AT THE TOP AND MID SECTION. EMBED GEOTEXTILE AND CHAIN LINK FENCE A MINIMUM OF 8 INCHES INTO THE GROUND.
4. WHERE ENDS OF THE GEOTEXTILE COME TOGETHER, THE ENDS SHALL BE OVERLAPPED BY 6 INCHES, FOLDED, AND STAPLED TO PREVENT SEDIMENT BY PASS.
5. EXTEND BOTH ENDS OF THE SUPER SILT FENCE A MINIMUM OF FIVE HORIZONTAL FEET UPSLOPE AT 45 DEGREES TO THE MAIN FENCE ALIGNMENT TO PREVENT RUNOFF FROM GOING AROUND THE ENDS OF THE SUPER SILT FENCE.
6. PROVIDE MANUFACTURER CERTIFICATION TO THE INSPECTION/ENFORCEMENT AUTHORITY SHOWING THAT GEOTEXTILE USED MEETS THE REQUIREMENTS IN SECTION H-1 MATERIALS.
7. REMOVE ACCUMULATED SEDIMENT AND DEBRIS WHEN BULGES DEVELOP IN FENCE OR WHEN SEDIMENT REACHES 25% OF FENCE HEIGHT. REPLACE GEOTEXTILE IF TORN. IF UNDERMINING OCCURS, REINSTALL CHAIN LINK FENCING AND GEOTEXTILE.

MARYLAND STANDARDS AND SPECIFICATIONS FOR SOIL EROSION AND SEDIMENT CONTROL

U.S. DEPARTMENT OF AGRICULTURE NATURAL RESOURCES CONSERVATION SERVICE	2011	MARYLAND DEPARTMENT OF ENVIRONMENT WATER MANAGEMENT ADMINISTRATION

DETAIL B-1 STABILIZED CONSTRUCTION ENTRANCE

STANDARD SYMBOL: SCE

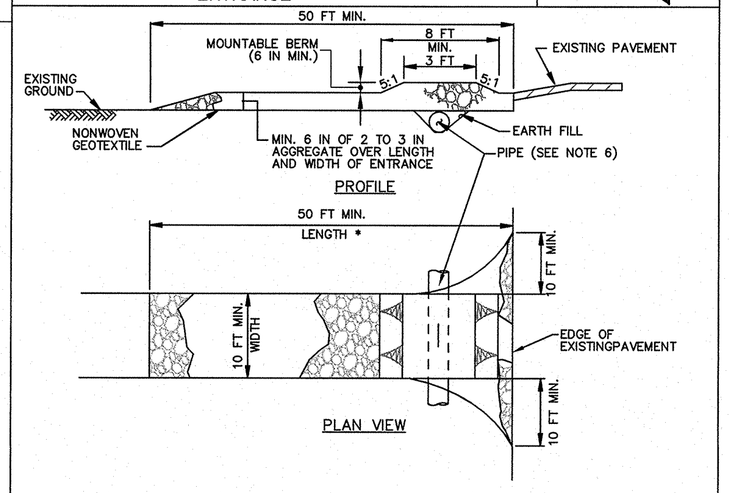

CONSTRUCTION SPECIFICATIONS

1. PLACE STABILIZED CONSTRUCTION ENTRANCE IN ACCORDANCE WITH THE APPROVED PLAN. VEHICLES MUST TRAVEL OVER THE ENTIRE LENGTH OF THE SCE. USE MINIMUM LENGTH OF 50 FEET (*30 FEET FOR SINGLE RESIDENCE LOT). USE MINIMUM WIDTH OF 10 FEET. FLARE SCE 10 FEET MINIMUM AT THE EXISTING ROAD TO PROVIDE A TURNING RADIUS.
2. PIPE ALL SURFACE WATER FLOWING TO OR DIVERTED TOWARD THE SCE UNDER THE ENTRANCE, MAINTAINING POSITIVE DRAINAGE. PROTECT PIPE INSTALLED THROUGH THE SCE WITH A MOUNTABLE BERM WITH 5:1 SLOPES AND A MINIMUM OF 12 INCHES OF STONE OVER THE PIPE. PROVIDE PIPE AS SPECIFIED ON APPROVED PLAN. WHEN THE SCE IS LOCATED AT A HIGH SPOT AND HAS NO DRAINAGE TO CONVEY, A PIPE IS NOT NECESSARY. A MOUNTABLE BERM IS REQUIRED WHEN SCE IS NOT LOCATED AT A HIGH SPOT.
3. PREPARE SUBGRADE AND PLACE NONWOVEN GEOTEXTILE, AS SPECIFIED IN SECTION H-1 MATERIALS.
4. PLACE CRUSHED AGGREGATE (2 TO 3 INCHES IN SIZE) OR EQUIVALENT RECYCLED CONCRETE (WITHOUT REBAR) AT LEAST 6 INCHES DEEP OVER THE LENGTH AND WIDTH OF THE SCE.
5. MAINTAIN ENTRANCE IN A CONDITION THAT MINIMIZES TRACKING OF SEDIMENT. ADD STONE OR MAKE OTHER REPAIRS AS CONDITIONS DEMAND TO MAINTAIN CLEAN SURFACE, MOUNTABLE BERM, AND SPECIFIED DIMENSIONS. IMMEDIATELY REMOVE STONE AND/OR SEDIMENT SPILLED, DROPPED, OR TRACKED ONTO ADJACENT ROADWAY BY VACUUMING, SCRAPING, AND/OR SWEEPING. WASHING ROADWAY TO REMOVE MUD TRACKED ONTO PAVEMENT IS NOT ACCEPTABLE UNLESS WASH WATER IS DIRECTED TO AN APPROVED SEDIMENT CONTROL PRACTICE.

MARYLAND STANDARDS AND SPECIFICATIONS FOR SOIL EROSION AND SEDIMENT CONTROL

U.S. DEPARTMENT OF AGRICULTURE NATURAL RESOURCES CONSERVATION SERVICE	2011	MARYLAND DEPARTMENT OF ENVIRONMENT WATER MANAGEMENT ADMINISTRATION

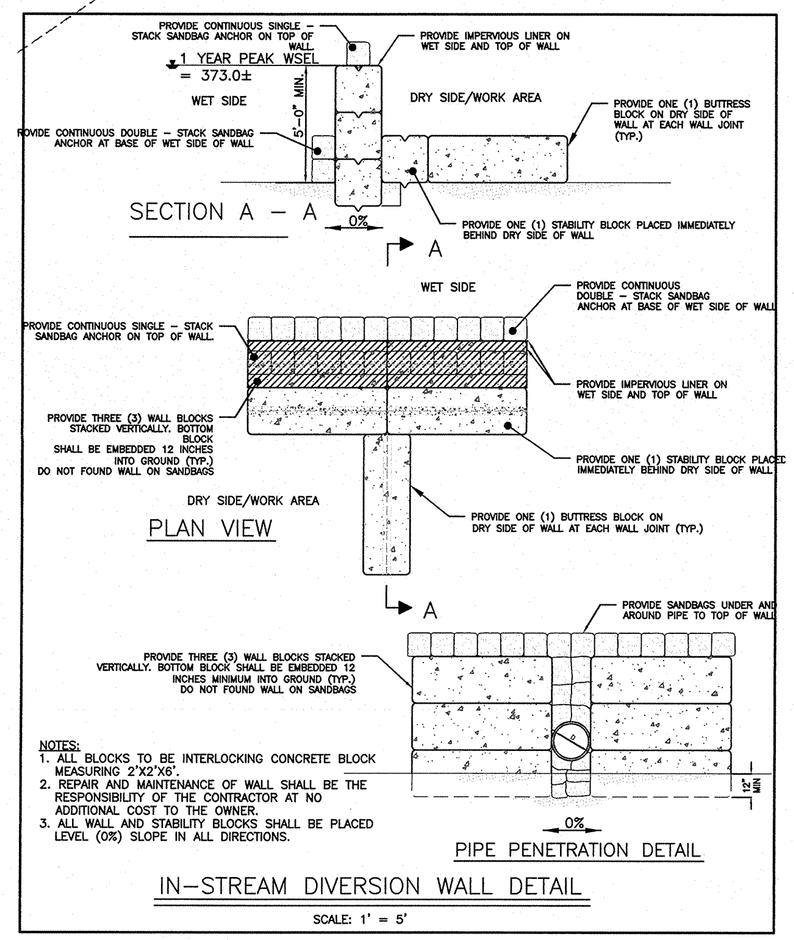

IN-STREAM DIVERSION WALL DETAIL

SCALE: 1" = 5'

DETAIL H-4-1 TEMPORARY ACCESS BRIDGE

STANDARD SYMBOL: TB

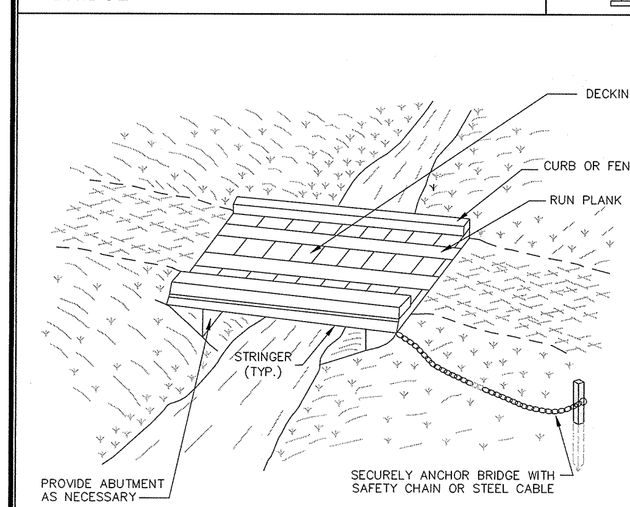

LOCATION PLAN

NOTE:
TIME OF YEAR RESTRICTIONS DO NOT APPLY TO THE CONSTRUCTION OR REMOVAL OF A TEMPORARY ACESS BRIDGE UNLESS THERE IS DISTURBANCE TO THE STREAM CHANNEL.

1 OF 2

MARYLAND STANDARDS AND SPECIFICATIONS FOR SOIL EROSION AND SEDIMENT CONTROL

U.S. DEPARTMENT OF AGRICULTURE NATURAL RESOURCES CONSERVATION SERVICE	2011	MARYLAND DEPARTMENT OF ENVIRONMENT WATER MANAGEMENT ADMINISTRATION

DETAIL H-4-1 TEMPORARY ACCESS BRIDGE

STANDARD SYMBOL: TB

CONSTRUCTION SPECIFICATIONS

1. CONSTRUCT TEMPORARY BRIDGE STRUCTURE AT OR ABOVE THE BANK ELEVATION TO PREVENT IMPACTS FROM FLOATING MATERIALS AND DEBRIS.
2. PLACE ABUTMENTS PARALLEL TO, AND ON, STABLE BANKS.
3. CONSTRUCT BRIDGE TO SPAN ENTIRE CHANNEL UNLESS OTHERWISE INDICATED ON APPROVED PLAN.
4. USE STRINGERS CONSISTING OF LOGS, SAWN TIMBER, PRESTRESSED CONCRETE BEAMS, METAL BEAMS, OR OTHER APPROVED MATERIALS.
5. SELECT DECKING MATERIALS TO PROVIDE SUFFICIENT STRENGTH TO SUPPORT THE ANTICIPATED LOAD. PLACE ALL DECKING MEMBERS PERPENDICULAR TO THE STRINGERS, BUTT TIGHTLY, AND SECURELY FASTEN. DECKING MATERIALS MUST BE BUTTED TIGHTLY TO PREVENT ANY SOIL MATERIAL TRACKED ONTO THE BRIDGE FROM FALLING INTO THE WATERWAY BELOW.
6. SECURELY FASTEN OPTIONAL RUN PLANKING FOR THE LENGTH OF THE SPAN. PROVIDE A RUN PLANK FOR EACH TRACK OF THE EQUIPMENT WHEELS. ALTHOUGH RUN PLANKS ARE OPTIONAL, THEY MAY BE NECESSARY TO PROPERLY DISTRIBUTE LOADS.
7. INSTALL CURBS THE ENTIRE LENGTH OF THE OUTER SIDES OF THE DECK TO PREVENT SEDIMENT FROM ENTERING THE STREAM CHANNEL.
8. ANCHOR BRIDGE SECURELY AT ONLY ONE END USING STEEL CABLE OR CHAIN. ANCHORING AT ONLY ONE END WILL PREVENT CHANNEL OBSTRUCTION IN THE EVENT THAT FLOODWATERS FLOAT THE BRIDGE. ACCEPTABLE ANCHORS ARE LARGE TREES, LARGE BOULDERS, OR DRIVEN STEEL POSTS. ANCHOR MUST BE SUFFICIENT TO PREVENT THE BRIDGE FROM FLOATING DOWNSTREAM.
9. AREAS DISTURBED DURING BRIDGE INSTALLATION AND\OR REMOVAL MUST NOT BE LEFT UNSTABILIZED OVERNIGHT UNLESS THE RUNOFF IS DIRECTED TO AN APPROVED SEDIMENT CONTROL DEVICE.
10. STABILIZE APPROACH TO BRIDGE AND KEEP FREE OF EROSION. CLEAN SEDIMENT FROM DECKING AND CURBS DAILY BY SCRAPING, SWEEPING, AND/OR VACUUMING. ENSURE THAT DECKING AND CURBS REMAIN TIGHTLY BUTTED WITHOUT GAPS. REMOVE DEBRIS TRAPPED BY BRIDGE. MAINTAIN AREAS ADJACENT TO CROSSING TO CONTINUOUSLY MEET REQUIREMENTS FOR ADEQUATE VEGETATIVE ESTABLISHMENT IN ACCORDANCE WITH SECTION B-4 VEGETATIVE STABILIZATION.
11. AFTER THE TEMPORARY CROSSING IS NO LONGER NEEDED, REMOVE IT WITHIN 14 CALENDAR DAYS. IF SUBJECT TO THE USE DESIGNATION CLOSURE, REMOVE AT THE END OF CLOSURE PERIOD. PROTECT STREAM BANKS DURING BRIDGE REMOVAL AND STABILIZE ALL DISTURBED AREAS WITH EROSION CONTROL MATTING. ACCOMPLISH REMOVAL OF THE BRIDGE AND CLEAN UP OF THE AREA WITHOUT CONSTRUCTION EQUIPMENT WORKING IN THE WATERWAY CHANNEL. STORE ALL REMOVED MATERIALS IN AN APPROVED STAGING AREA.

2 OF 2

MARYLAND STANDARDS AND SPECIFICATIONS FOR SOIL EROSION AND SEDIMENT CONTROL

U.S. DEPARTMENT OF AGRICULTURE NATURAL RESOURCES CONSERVATION SERVICE	2011	MARYLAND DEPARTMENT OF ENVIRONMENT WATER MANAGEMENT ADMINISTRATION

DETAIL H-6 ONSITE CONCRETE WASHOUT STRUCTURE

STANDARD SYMBOL: CWS

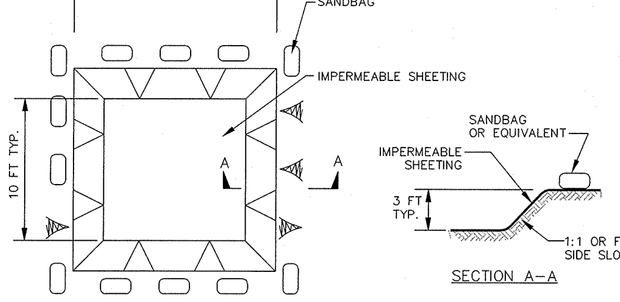

PLAN

EXCAVATED WASHOUT STRUCTURE

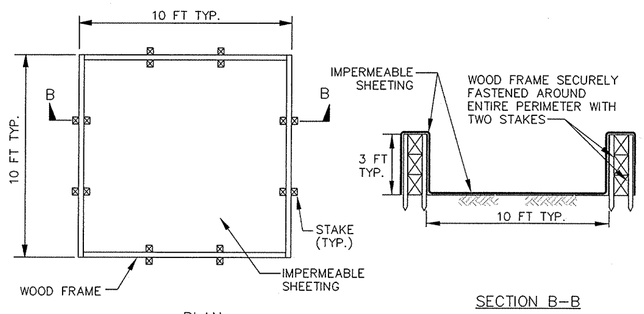

PLAN

WASHOUT STRUCTURE WITH WOOD PLANKS

1 OF 2

MARYLAND STANDARDS AND SPECIFICATIONS FOR SOIL EROSION AND SEDIMENT CONTROL

U.S. DEPARTMENT OF AGRICULTURE NATURAL RESOURCES CONSERVATION SERVICE	2011	MARYLAND DEPARTMENT OF ENVIRONMENT WATER MANAGEMENT ADMINISTRATION

DETAIL H-6 ONSITE CONCRETE WASHOUT STRUCTURE

STANDARD SYMBOL: CWS

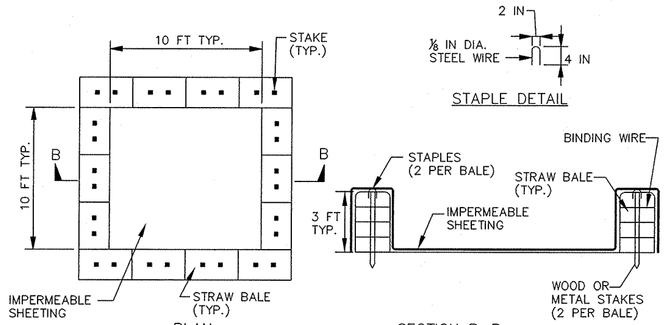

NOTE: CAN BE TWO STACKED BALES OR PARTIALLY EXCAVATED TO REACH 3 FT DEPTH

WASHOUT STRUCTURE WITH STRAW BALES

CONSTRUCTION SPECIFICATIONS

1. LOCATE WASHOUT STRUCTURE A MINIMUM OF 50 FEET AWAY FROM OPEN CHANNELS, STORM DRAIN INLETS, SENSITIVE AREAS, WETLANDS, BUFFERS AND WATER COURSES AND AWAY FROM CONSTRUCTION TRAFFIC.
2. SIZE WASHOUT STRUCTURE FOR VOLUME NECESSARY TO CONTAIN WASH WATER AND SOLIDS AND MAINTAIN AT LEAST 4 INCHES OF FREEBOARD. TYPICAL DIMENSIONS ARE 10 FEET X 10 FEET X 3 FEET DEEP.
3. PREPARE SOIL BASE FREE OF ROCKS OR OTHER DEBRIS THAT MAY CAUSE TEARS OR HOLES IN THE LINER. FOR LINER, USE 10 MIL OR THICKER UV RESISTANT, IMPERMEABLE SHEETING, FREE OF HOLES AND TEARS OR OTHER DEFECTS THAT COMPROMISE IMPERMEABILITY OF THE MATERIAL.
4. PROVIDE A SIGN FOR THE WASHOUT IN CLOSE PROXIMITY TO THE FACILITY.
5. KEEP CONCRETE WASHOUT STRUCTURE WATER TIGHT. REPLACE IMPERMEABLE LINER IF DAMAGED (E.G., RIPPED OR PUNCTURED). EMPTY OR REPLACE WASHOUT STRUCTURE THAT IS 75 PERCENT FULL, AND DISPOSE OF ACCUMULATED MATERIAL PROPERLY. DO NOT REUSE PLASTIC LINER. WET-VACUUM STORED LIQUIDS THAT HAVE NOT EVAPORATED AND DISPOSE OF IN AN APPROVED MANNER. PRIOR TO FORECASTED RAINSTORMS, REMOVE LIQUIDS OR COVER STRUCTURE TO PREVENT OVERFLOWS. REMOVE HARDENED SOLIDS, WHOLE OR BROKEN UP, FOR DISPOSAL OR RECYCLING. MAINTAIN RUNOFF DIVERSION AROUND EXCAVATED WASHOUT STRUCTURE UNTIL STRUCTURE IS REMOVED.

2 OF 2

MARYLAND STANDARDS AND SPECIFICATIONS FOR SOIL EROSION AND SEDIMENT CONTROL

U.S. DEPARTMENT OF AGRICULTURE NATURAL RESOURCES CONSERVATION SERVICE	2011	MARYLAND DEPARTMENT OF ENVIRONMENT WATER MANAGEMENT ADMINISTRATION

FOR SEDIMENT CONTROL ONLY

GENERAL NOTES:
1. THIS PLAN SHALL ONLY BE USED FOR CONSTRUCTION OF SEDIMENT CONTROL AND ASSOCIATED SEDIMENT CONTROL IMPROVEMENTS AS SHOWN. THIS PLAN SHALL NOT BE USED FOR ANY OTHER CONSTRUCTION PURPOSE. THIS PLAN SHALL NOT BE USED FOR GRADING OF THE SITE.

MISS UTILITY

Call "Miss Utility" at 1-800-257-7777, 48 hours prior to the start of work. The excavator must notify all public utility companies with underground facilities in the area of proposed excavation and have those facilities located by the utility companies prior to commencing excavation. The excavator is responsible for compliance with requirements of Chapter 36A of the Montgomery County Code.

MONTGOMERY COUNTY DEPARTMENT OF PERMITTING SERVICES APPROVED FOR:

Stormwater Management:
SEDIMENT CONTROL REVIEW ONLY
Reviewed Date
Approved Date
1007 REG
S.M.File No.

Sediment Control Technical Requirements:
Reviewed 5/19/14 Date
Approved 5/18/2014 Date

Administrative Requirements:
Reviewed 5/19/14 Date
260755
SEDIMENT CONTROL PERMIT No.

MCDPS APPROVAL OF THIS PLAN WILL EXPIRE ONE YEAR FROM THE DATE OF APPROVAL, IF THE PROJECT HAS NOT STARTED, UNLESS THE PERMIT HAS BEEN EXTENDED.

NOTE: MCDPS APPROVAL DOES NOT NEGATE THE NEED OF A MCDPS ACCESS PERMIT.

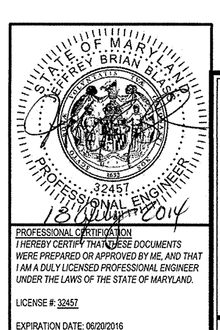

PROFESSIONAL CERTIFICATION
I HEREBY CERTIFY THAT THESE DOCUMENTS WERE PREPARED OR APPROVED BY ME, AND THAT I AM A DULY LICENSED PROFESSIONAL ENGINEER UNDER THE LAWS OF THE STATE OF MARYLAND.
LICENSE #: 32457
EXPIRATION DATE: 05/20/2016

SEDIMENT CONTROL DETAILS

REGIONAL STORMWATER MANAGEMENT POND REPAIR AND RETROFIT (2014)

CHADSWOOD

GERMANTOWN (9th) ELECTION DISTRICT
MONTGOMERY COUNTY, MARYLAND

CPJ Associates — Charles P. Johnson & Associates, Inc.
Civil and Environmental Engineers • Planners • Landscape Architects • Surveyors
1751 Elton Rd., Ste. 300 Silver Spring, MD 20903 301-434-7000 Fax: 301-434-9394
www.cpja.com • Silver Spring, MD • Gaithersburg, MD • College Park, MD • Frederick, MD • Fairfax, VA

CLIENT: MONTGOMERY COUNTY DEPARTMENT OF ENVIRONMENTAL PROTECTION 255 ROCKVILLE PIKE SUITE 120 ROCKVILLE, MARYLAND 20850 CONTACT: GENE GOPENKO, P.E. PHONE:(240) 777-7723	PRELIMINARY PLAN NO.	N/A	SITE PLAN NO. N/A
	DESIGN	JBB	SHEET 7 OF 21
	DRAFT	ADG	SC-5 SC-5
	DATE	JULY, 2014	FILE NO : 43-274-24.1
	SCALE	AS-SHOWN	

COPYRIGHT © LATEST DATE HEREON CHARLES P. JOHNSON & ASSOCIATES, INC. ALL RIGHTS RESERVED, UNAUTHORIZED USE OR REPRODUCTION IS PROHIBITED.

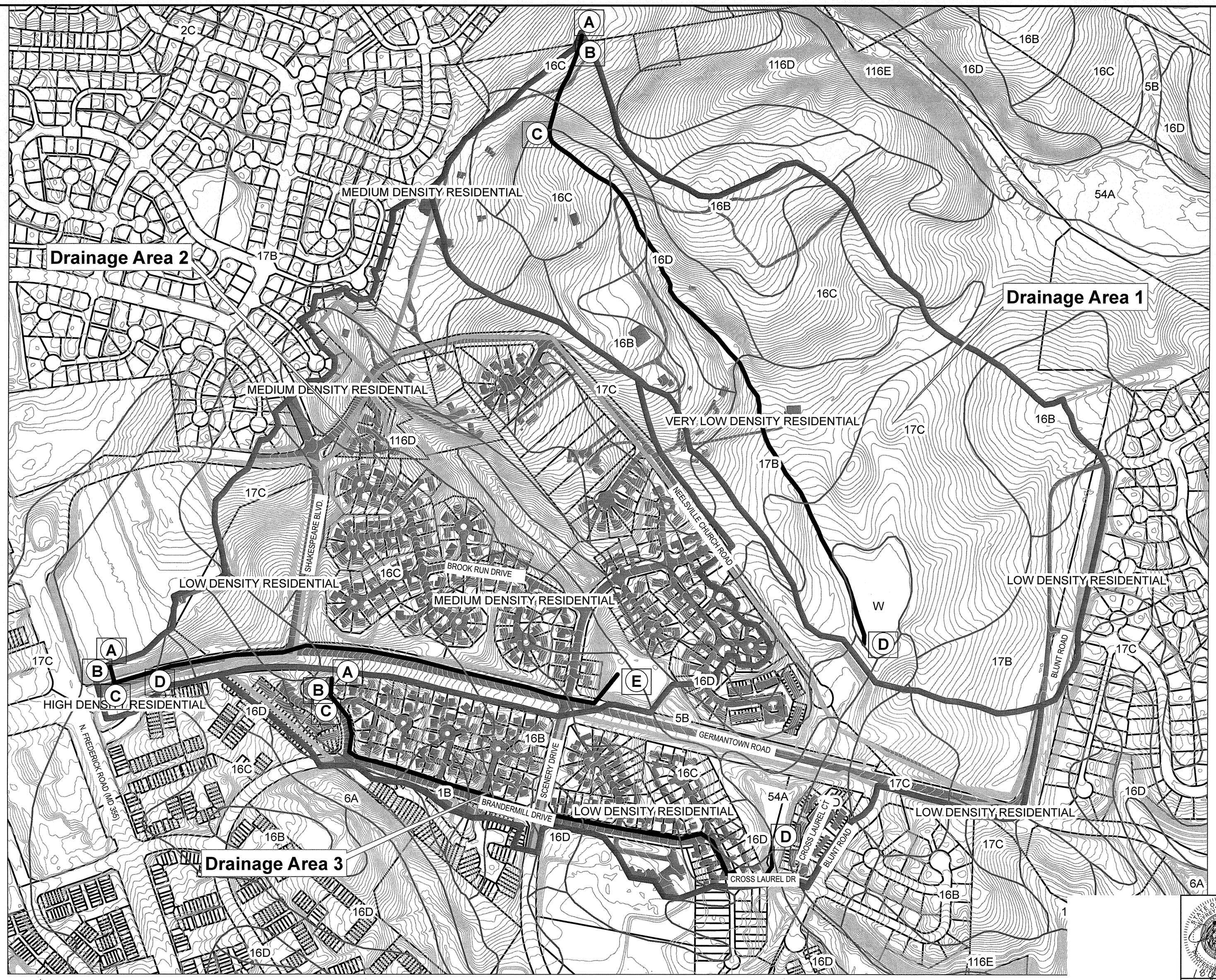

Hydrologic Summary				
Name	Chadswood			
Sub Area	1	2	3	Units
Drainage Area	129.2	116.67	77.67	Acres
RCN	66	75	72	
Time of Concentration	0.479	0.238	0.196	Hours

Sub Area 1: Land Use/Soil Composition			
Land Use/Hydrologic Soil Group	B	C	D
Residential 1/4 Acre Lots	0.063	N\A	N\A
Residential 1 Acre Lots	0.951	N\A	N\A
Residential 2 Acre Lots	123.926	0.283	N\A
Water	3.98	N\A	N\A

Sub Area 1: Flow Path Summary					
Segment\Parameter	Flow Type	Length	Slope	Velocity	Surface
A to B	Sheet Flow	50 LF	6%	N\A	Woods, Dense
B to C	Shallow Concentrated	950 LF	9.2%	N\A	Unpaved
C to D	Open Channel	2800 LF	N\A	4.0 fps	Stream Channel

Sub Area 2: Land Use/Soil Composition			
Land Use/Hydrologic Soil Group	B	C	D
Residential 1/8 Acre Lots	1.157	N\A	N\A
Residential 1/4 Acre Lots	70.083	4.634	14.615
Residential 1 Acre Lots	15.309	N\A	N\A
Residential 2 Acre Lots	9.539	N\A	1.333

Sub Area 2: Flow Path Summary					
Segment\Parameter	Flow Type	Length	Slope	Velocity	Surface
A to B	Sheet Flow	50 LF	22%	N\A	Woods, Dense
B to C	Shallow Concentrated	50 LF	28%	N\A	Unpaved
C to D	Shallow Concentrated	250 LF	0.8%	N\A	Paved
D to E	Open Channel	2575 LF	N\A	6.0 fps	Storm Drain

Sub Area 3: Land Use/Soil Composition			
Land Use/Hydrologic Soil Group	B	C	D
Residential 1/8 Acre Lots	0.667	N\A	N\A
Residential 1/4 Acre Lots	28.925	3.648	0.784
Residential 1 Acre Lots	21.766	0.288	3.264
Residential 2 Acre Lots	16.695	1.598	0.035

Sub Area 3: Flow Path Summary					
Segment\Parameter	Flow Type	Length	Slope	Velocity	Surface
A to B	Sheet Flow	50 LF	8%	N\A	Grass, Range Short
B to C	Shallow Concentrated	25 LF	8%	N\A	Unpaved
C to D	Open Channel	3025 LF	N\A	6.0 fps	Storm Drain

DRAINAGE AREA MAP

REGIONAL STORMWATER MANAGEMENT
POND REPAIR AND RETROFIT (2014)

CHADSWOOD

GERMANTOWN (9th) ELECTION DISTRICT
MONTGOMERY COUNTY, MARYLAND

CPJ Associates
Charles P. Johnson & Associates, Inc.
Civil and Environmental Engineers • Planners • Landscape Architects • Surveyors
1751 Elton Rd., Ste. 300 Silver Spring, MD 20903 301-434-7000 Fax: 301-434-9394
www.cpja.com • Silver Spring, MD • Gaithersburg, MD • College Park, MD • Frederick, MD • Fairfax, VA

STATE OF MARYLAND — JEFFREY BRIAN BECK — 32457 — PROFESSIONAL ENGINEER
7/18/2014

PROFESSIONAL CERTIFICATION
I HEREBY CERTIFY THAT THESE DOCUMENTS WERE PREPARED OR APPROVED BY ME, AND THAT I AM A DULY LICENSED PROFESSIONAL ENGINEER UNDER THE LAWS OF THE STATE OF MARYLAND.
LICENSE #: 32457
EXPIRATION DATE: 06/20/2016

CLIENT: MONTGOMERY COUNTY
DEPARTMENT OF ENVIRONMENTAL PROTECTION
255 ROCKVILLE PIKE SUITE 120
ROCKVILLE, MARYLAND 20850
CONTACT: GENE GOPENKO, P.E.
PHONE:(240) 777-7723

COPYRIGHT © LATEST DATE HEREON CHARLES P. JOHNSON & ASSOCIATES, INC. ALL RIGHTS RESERVED, UNAUTHORIZED USE OR REPRODUCTION IS PROHIBITED.

PRELIMINARY PLAN NO:	N/A
SITE PLAN NO:	N/A
DESIGN	JBB
DRAFT	ADG
DATE	JULY, 2014
SCALE	1"=300'
SHEET	8
OF	21
	SWM-1 SWM-8
FILE NO:	43-274-24.1

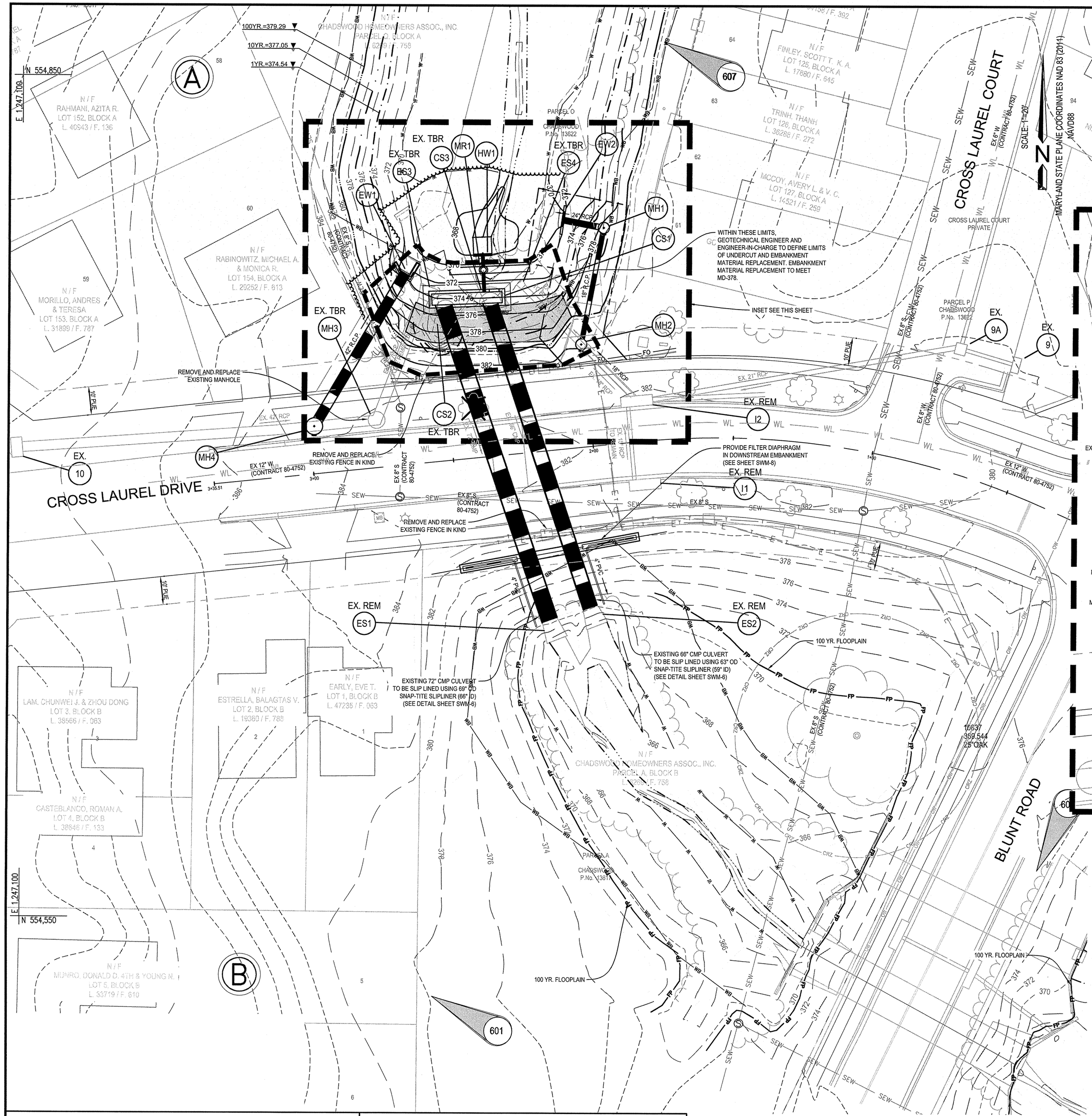

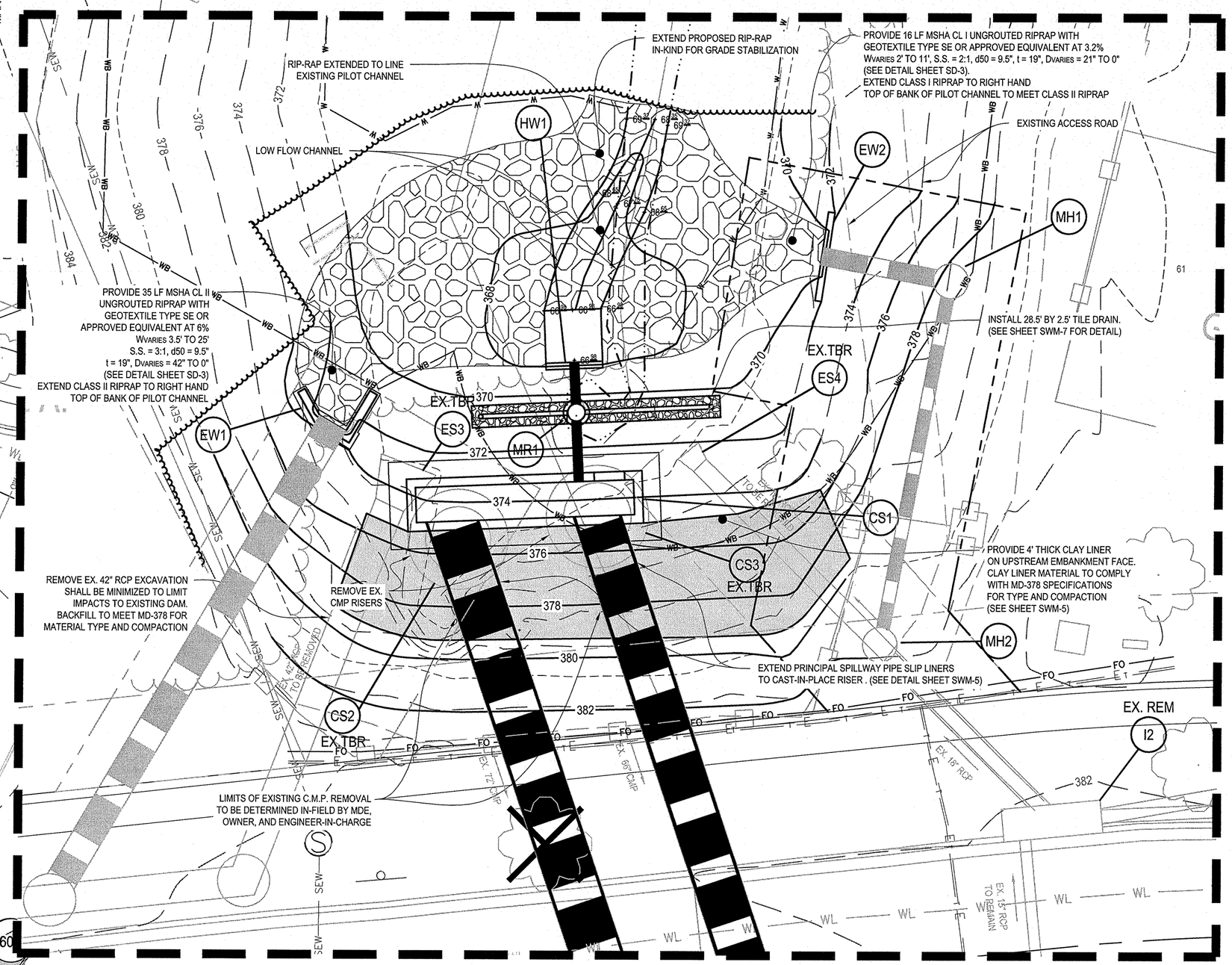

RISER AND MINI RISER INSET

SCALE: 1"=10'

MISS UTILITY

Call "Miss Utility" at 1-800-257-7777, 48 hours prior to the start of work. The excavator must notify all public utility companies with underground facilities in the area of proposed excavation and have those facilities located by the utility companies prior to commencing excavation. The excavator is responsible for compliance with requirements of Chapter 36A of the Montgomery County Code.

GENERAL NOTES:

1. THIS PLAN SHALL ONLY BE USED FOR THE CONSTRUCTION OF STORMWATER MANAGEMENT AND ASSOCIATED STORMWATER MANAGEMENT IMPROVEMENTS AS SHOWN. THIS PLAN SHALL NOT BE USED FOR ANY OTHER CONSTRUCTION PURPOSE. THIS PLAN SHALL NOT BE USED FOR GRADING OF THE SITE OTHER THAN AREAS WITHIN THE SWM EASEMENT.

STORMWATER MANAGEMENT PLAN VIEW

REGIONAL STORMWATER MANAGEMENT POND REPAIR AND RETROFIT (2014)

CHADSWOOD

GERMANTOWN (9th) ELECTION DISTRICT
MONTGOMERY COUNTY, MARYLAND

CPJ Associates — Charles P. Johnson & Associates, Inc.
Civil and Environmental Engineers • Planners • Landscape Architects • Surveyors
1751 Elton Rd., Ste. 300 Silver Spring, MD 20903 301-434-7000 Fax: 301-434-9394
www.cpja.com • Silver Spring, MD • Gaithersburg, MD • College Park, MD • Frederick, MD • Fairfax, VA

STATE OF MARYLAND — ROBERT BRIAN BEALL — No. 32457 — PROFESSIONAL ENGINEER

PROFESSIONAL CERTIFICATION. I HEREBY CERTIFY THAT THESE DOCUMENTS WERE PREPARED OR APPROVED BY ME, AND THAT I AM A DULY LICENSED PROFESSIONAL ENGINEER UNDER THE LAWS OF THE STATE OF MARYLAND.

LICENSE #: 32457

EXPIRATION DATE: 06/20/2016

CLIENT: MONTGOMERY COUNTY
DEPARTMENT OF ENVIRONMENTAL PROTECTION
255 ROCKVILLE PIKE SUITE 120
ROCKVILLE, MARYLAND 20850
CONTACT: GENE GOPENKO, P.E.
PHONE:(240) 777-7723

COPYRIGHT © LATEST DATE HEREON CHARLES P. JOHNSON & ASSOCIATES, INC. ALL RIGHTS RESERVED, UNAUTHORIZED USE OR REPRODUCTION IS PROHIBITED.

PRELIMINARY PLAN NO: N/A	SITE PLAN NO: N/A
DESIGN JBB	SHEET 9 OF 21
DRAFT ADG	SWM-2 SWM-8
DATE JULY, 2014	FILE NO: 43-274-24.1
SCALE AS-SHOWN	

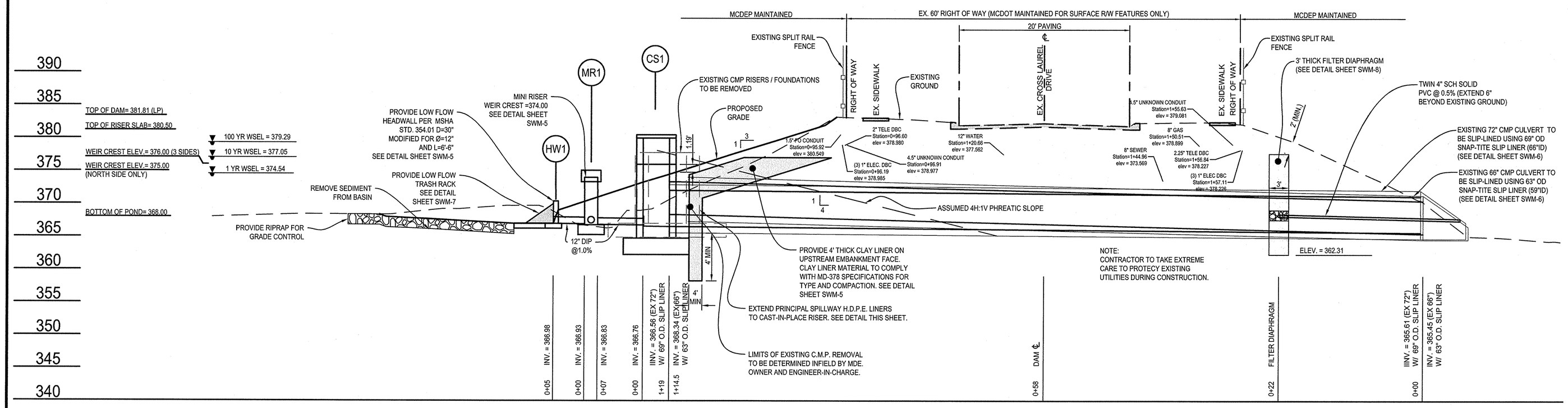

PRINCIPAL SPILLWAY PROFILE

SCALE: 1" = 10'

NOTE:
ALL FEATURES RELATED TO THE DAM EMBANKMENT INCLUDING PRINCIPAL SPILLWAY PIPES, FILTER DIAPHRAGM AND RELATED PIPING LOCATED WITHIN THE PUBLIC RIGHT OF WAY SHALL BE MAINTAINED BY MCDEP.

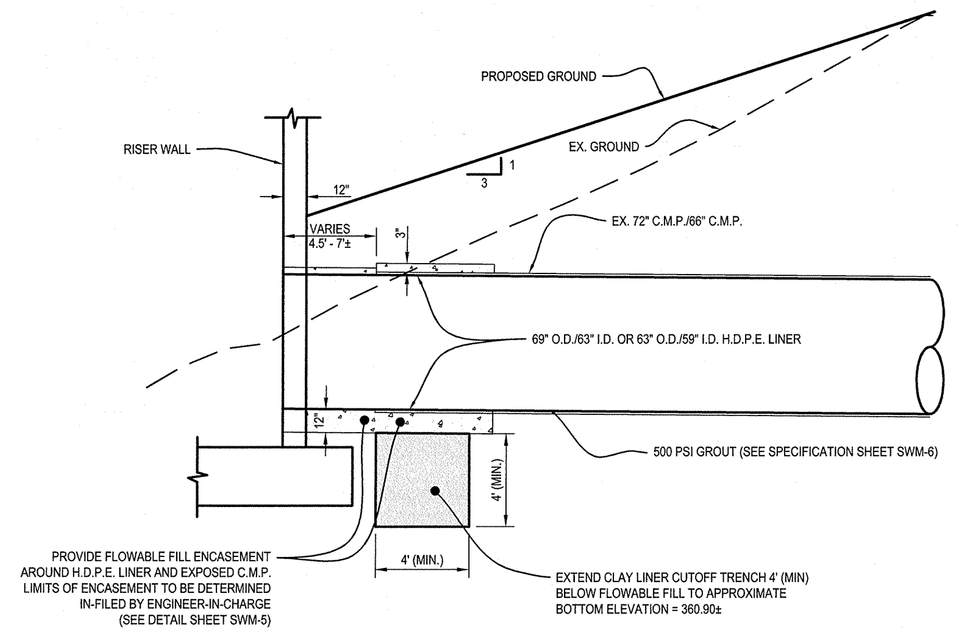

PRINCIPAL SPILLWAY LINER EXTENSION DETAIL

SCALE: 1" = 5'

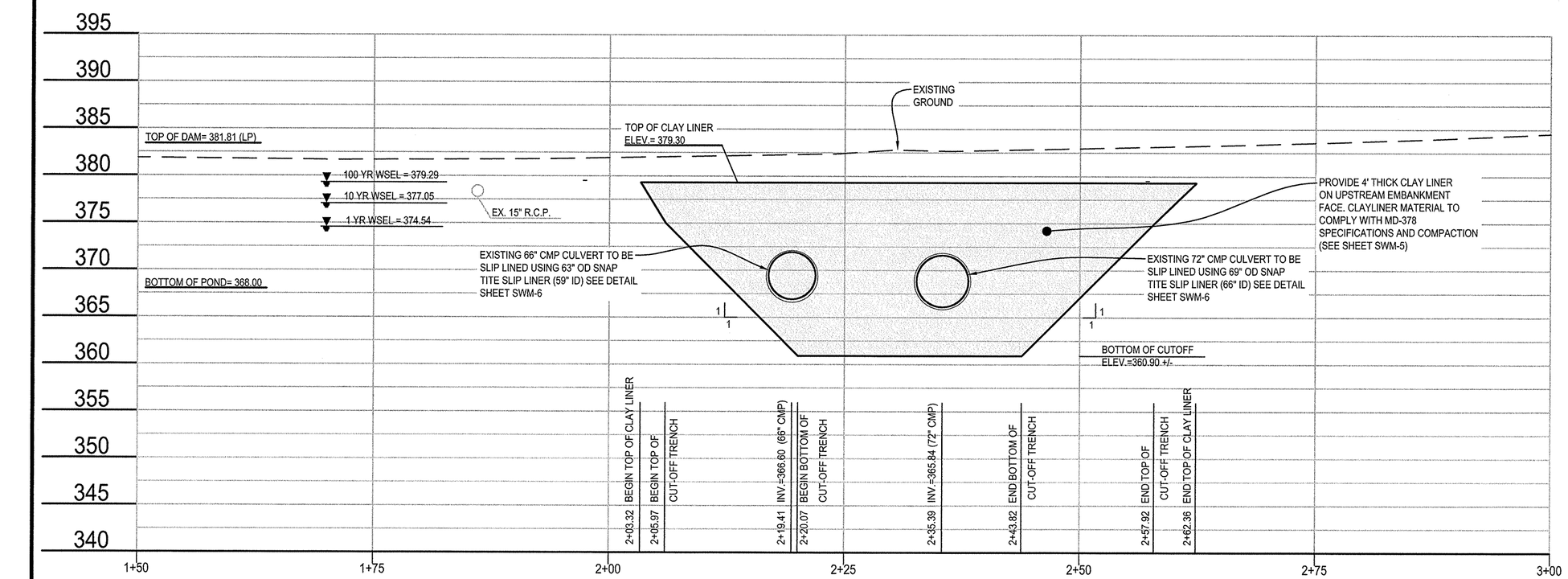

EMBANKMENT CENTERLINE PROFILE

SCALE: 1" = 10'

NOTES:
1. ALL STATIONING IS TAKEN FROM CENTER LINE OF ROADWAY ALIGNMENT.
2. ALL FEATURES RELATED TO THE DAM EMBANKMENT INCLUDING PRINCIPAL SPILLWAY PIPES, FILTER DIAPHRAGM AND RELATED PIPING LOCATED WITHIN THE PUBLIC RIGHT OF WAY SHALL BE MAINTAINED BY MCDEP.

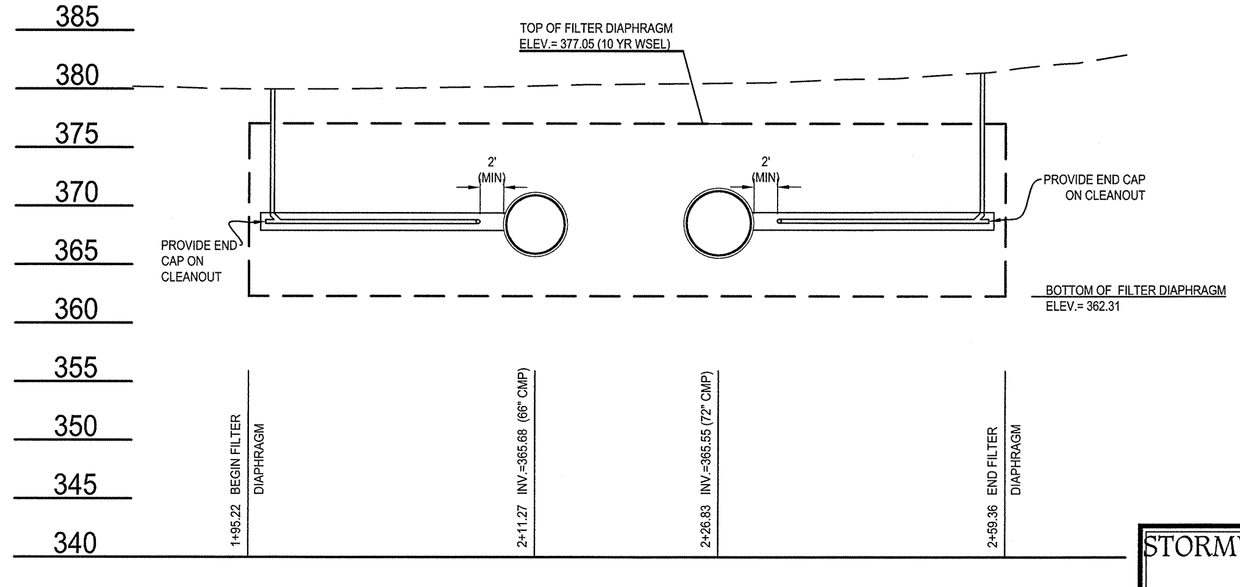

FILTER DIAPHRAGM PROFILE

SCALE: 1" = 10'

NOTES:
1. ALL STATIONING IS TAKEN FROM CENTER LINE OF ROADWAY ALIGNMENT.
2. ALL FEATURES RELATED TO THE DAM EMBANKMENT INCLUDING PRINCIPAL SPILLWAY PIPES, FILTER DIAPHRAGM AND RELATED PIPING LOCATED WITHIN THE PUBLIC RIGHT OF WAY SHALL BE MAINTAINED BY MCDEP.

MISS UTILITY

Call "Miss Utility" at 1-800-257-7777, 48 hours prior to the start of work. The excavator must notify all public utility companies with underground facilities in the area of proposed excavation and have those facilities located by the utility companies prior to commencing excavation. The excavator is responsible for compliance with requirements of Chapter 36A of the Montgomery County Code.

GENERAL NOTES:
1. THIS PLAN SHALL ONLY BE USED FOR THE CONSTRUCTION OF STORMWATER MANAGEMENT AND ASSOCIATED STORMWATER MANAGEMENT IMPROVEMENTS AS SHOWN. THIS PLAN SHALL NOT BE USED FOR ANY OTHER CONSTRUCTION PURPOSE. THIS PLAN SHALL NOT BE USED FOR GRADING OF THE SITE OTHER THAN AREAS WITHIN THE SWM EASEMENT.

GRAPHIC SCALE
10 0 5 10 20
SCALE: 1" = 10'

STATE OF MARYLAND — BRIAN J. DOLLY — 32451 — REGISTERED PROFESSIONAL ENGINEER — 12/4/2014

PROFESSIONAL CERTIFICATION
I HEREBY CERTIFY THAT THESE DOCUMENTS WERE PREPARED OR APPROVED BY ME, AND THAT I AM A DULY LICENSED PROFESSIONAL ENGINEER UNDER THE LAWS OF THE STATE OF MARYLAND.
LICENSE # 32451
EXPIRATION DATE: 06/20/2016

STORMWATER MANAGEMENT PROFILES AND DETAILS

REGIONAL STORMWATER MANAGEMENT POND REPAIR AND RETROFIT (2014)

CHADSWOOD

GERMANTOWN (9th) ELECTION DISTRICT
MONTGOMERY COUNTY, MARYLAND

CPJ Associates — Charles P. Johnson & Associates, Inc.
Civil and Environmental Engineers • Planners • Landscape Architects • Surveyors
1751 Elton Rd., Ste. 300 Silver Spring, MD 20903 301-434-7000 Fax: 301-434-9394
www.cpja.com • Silver Spring, MD • Gaithersburg, MD • College Park, MD • Frederick, MD • Fairfax, VA

CLIENT: MONTGOMERY COUNTY
DEPARTMENT OF ENVIRONMENTAL PROTECTION
255 ROCKVILLE PIKE SUITE 120
ROCKVILLE, MARYLAND 20850
CONTACT: GENE GOPENKO, P.E.
PHONE:(240) 777-7723

COPYRIGHT © LATEST DATE HEREON CHARLES P. JOHNSON & ASSOCIATES, INC. ALL RIGHTS RESERVED, UNAUTHORIZED USE OR REPRODUCTION IS PROHIBITED.

PRELIMINARY PLAN NO:	N/A
SITE PLAN NO:	N/A
DESIGN	JBB
DRAFT	ADG
DATE	JULY, 2014
SCALE	1"=10'
SHEET	10
OF	21
	SWM-3 SWM-8
FILE NO:	43-274-24.1

Last Saved 7/17/2014 Last Plotted 7/18/2014 8:31 AM Sheet N:\43274\DWG\24-01
Attached Xrefs: _TB22,34 - PUBLIC/TB22x34/08-R-T02/06-V-T001/06-R-T001

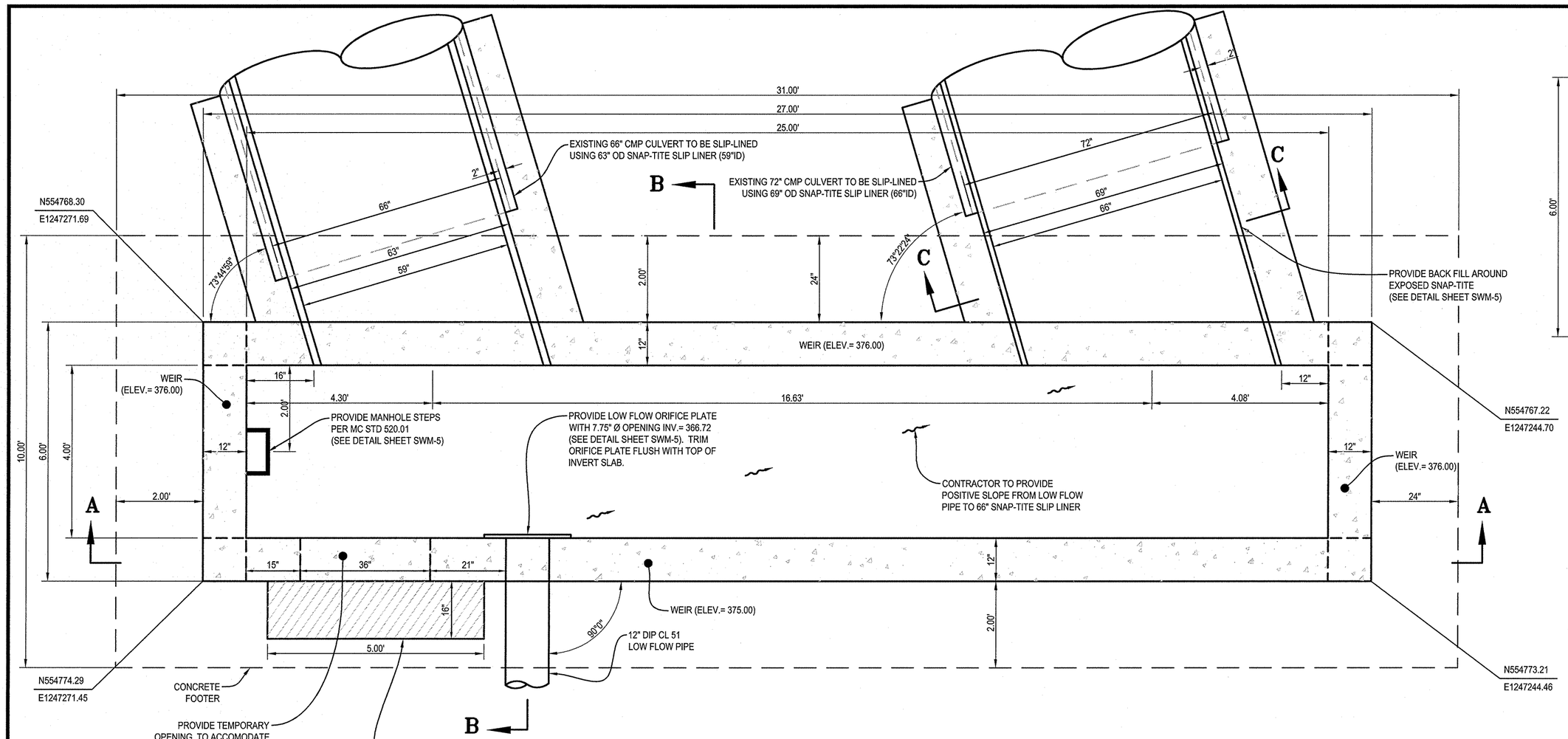

RISER DETAILS (TOP SLAB REMOVED)

SCALE: 1"=2'

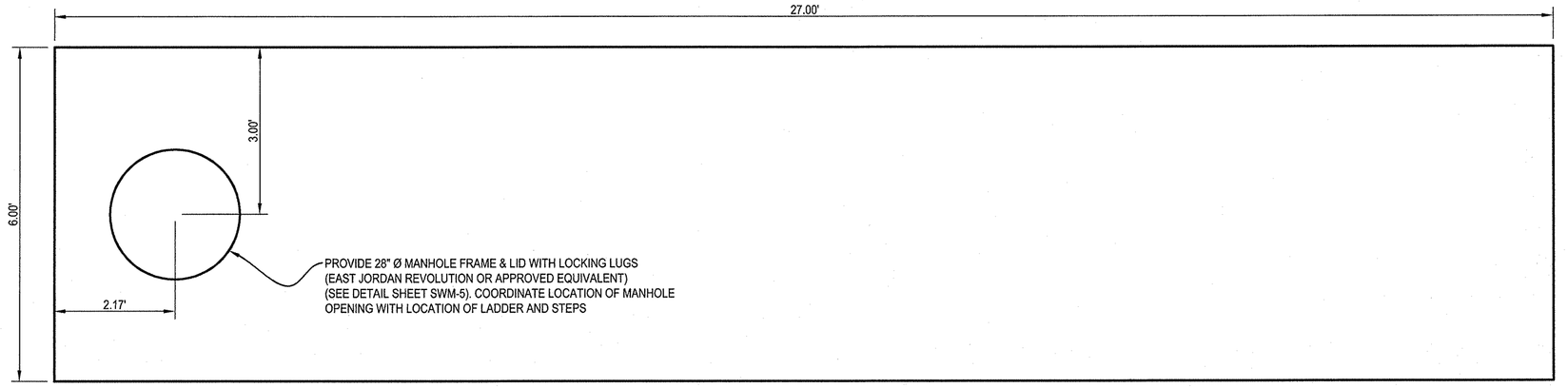

TOP SLAB

SCALE: 1"=2'

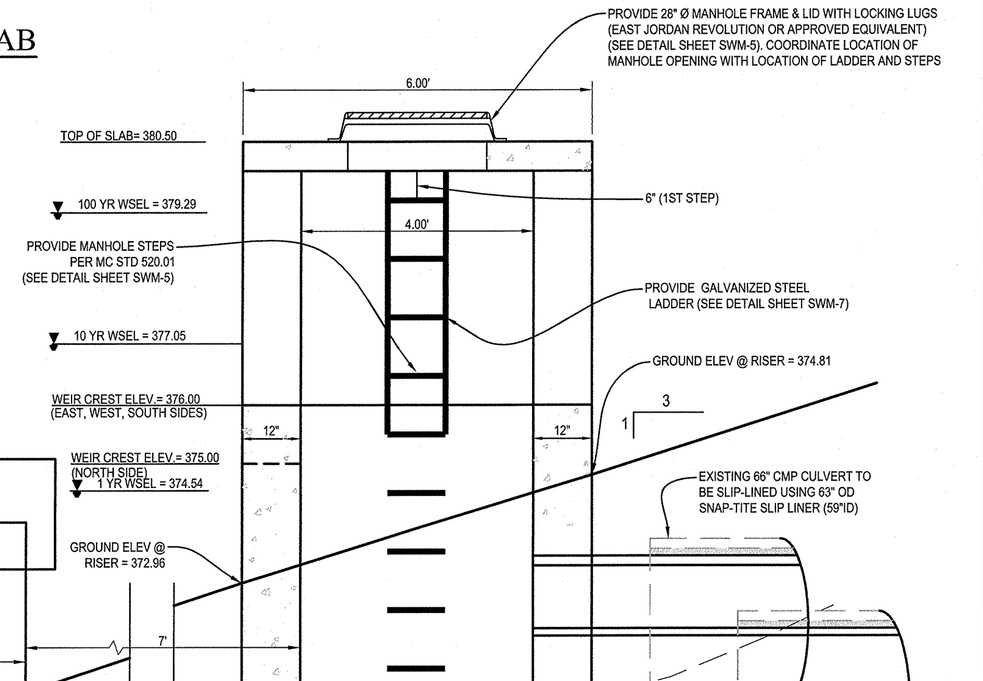

SECTION B-B

SCALE: 1"=2'

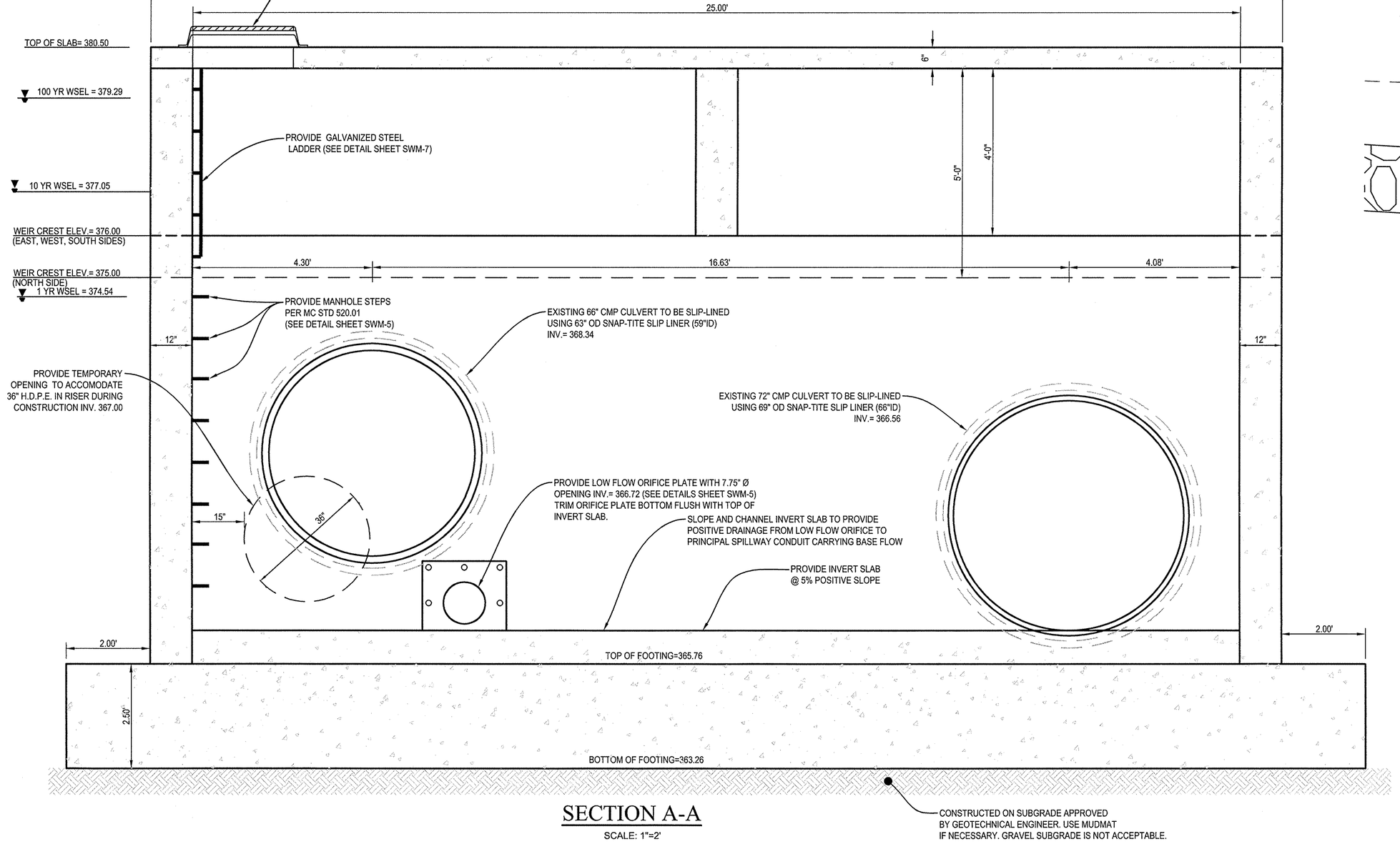

SECTION A-A

SCALE: 1"=2'

GRAPHIC SCALE

2 0 1 2 4

SCALE: 1" = 2'

GENERAL NOTES:

1. THIS PLAN SHALL ONLY BE USED FOR THE CONSTRUCTION OF STORMWATER MANAGEMENT AND ASSOCIATED STORMWATER MANAGEMENT IMPROVEMENTS AS SHOWN. THIS PLAN SHALL NOT BE USED FOR ANY OTHER CONSTRUCTION PURPOSE. THIS PLAN SHALL NOT BE USED FOR GRADING OF THE SITE OTHER THAN AREAS WITHIN THE SWM EASEMENT.

MISS UTILITY

Call "Miss Utility" at 1-800-257-7777, 48 hours prior to the start of work. The excavator must notify all public utility companies with underground facilities in the area of proposed excavation and have those facilities located by the utility companies prior to commencing excavation. The excavator is responsible for compliance with requirements of Chapter 36A of the Montgomery County Code.

STATE OF MARYLAND — JEFFREY BRIAN PLAUS — 32457 — PROFESSIONAL ENGINEER

PROFESSIONAL CERTIFICATION. I HEREBY CERTIFY THAT THESE DOCUMENTS WERE PREPARED OR APPROVED BY ME, AND THAT I AM A DULY LICENSED PROFESSIONAL ENGINEER UNDER THE LAWS OF THE STATE OF MARYLAND.

LICENSE #: 32457

EXPIRATION DATE: 06/2016

RISER DESIGN

REGIONAL STORMWATER MANAGEMENT POND REPAIR AND RETROFIT (2014)

CHADSWOOD

GERMANTOWN (9th) ELECTION DISTRICT
MONTGOMERY COUNTY, MARYLAND

CPJ Associates — Charles P. Johnson & Associates, Inc.
Civil and Environmental Engineers • Planners • Landscape Architects • Surveyors
1751 Elton Rd., Ste. 300 Silver Spring, MD 20903 301-434-7000 Fax: 301-434-9394
www.cpja.com • Silver Spring, MD • Gaithersburg, MD • College Park, MD • Frederick, MD • Fairfax, VA

CLIENT: MONTGOMERY COUNTY
DEPARTMENT OF ENVIRONMENTAL PROTECTION
255 ROCKVILLE PIKE SUITE 120
ROCKVILLE, MARYLAND 20850
CONTACT: GENE GOPENKO, P.E.
PHONE:(240) 777-7723

PRELIMINARY PLAN NO: N/A		SITE PLAN NO: N/A	
DESIGN	JBB	SHEET	OF
DRAFT	ADG	11	21
DATE	JULY, 2014	SWM-4	SWM-8
SCALE	1"=2'	FILE NO: 43-274-24.1	

COPYRIGHT © LATEST DATE HEREON CHARLES P. JOHNSON & ASSOCIATES, INC. ALL RIGHTS RESERVED, UNAUTHORIZED USE OR REPRODUCTION IS PROHIBITED.

Last Saved 7/17/2014 Last Plotted 7/17/2014 2:19 PM Sheet N:\43274\DWG\24-01

Attached Xrefs: _TB22x34 — PUBLIC/TB22x34/06-R-T002/06-V-T001/06-R-T001

POND CONSTRUCTION SPECIFICATIONS (per NRCS MD Code No. 378)

These specifications are appropriate to all ponds within the scope of the Standard for practice MD-378. All references to ASTM and AASHTO specifications apply to the most recent version.

Site Preparation
Areas designated for borrow areas, embankment, and structural works shall be cleared, grubbed and stripped of topsoil. All trees, vegetation, roots and other objectionable material shall be removed. Channel banks and sharp breaks shall be sloped to no steeper than 1:1. All trees shall be cleared and grubbed within 15 feet of the toe of the embankment.

Areas to be covered by the reservoir will be cleared of all trees, brush, logs, fences, rubbish and other objectionable material unless otherwise designated on the plans. Trees, brush, and stumps shall be cut approximately level with the ground surface. For dry stormwater management ponds, a minimum of a 25-foot radius around the inlet structure shall be cleared.

All cleared and grubbed material shall be disposed of outside and below the limits of the dam and reservoir as directed by the owner or his representative. When specified, a sufficient quantity of topsoil will be stockpiled in a suitable location for use on the embankment and other designated areas.

Earth Fill
Material - The fill material shall be taken from approved designated borrow areas. It shall be free of roots, stumps, wood, rubbish, stones greater than 6", frozen or other objectionable materials. Fill material for the center of the embankment, and cut off trench shall conform to Unified Soil Classification GC, SC, CH, or CL and must have at least 30% passing the #200 sieve. Consideration may be given to the use of other materials in the embankment if designed by a geotechnical engineer. Such special designs must have construction supervised by a geotechnical engineer. Materials used in the outer shell of the embankment must have the capability to support vegetation of the quality required to prevent erosion of the embankment.

Placement - Areas on which fill is to be placed shall be scarified prior to placement of fill. Fill materials shall be placed in maximum 8 inch thick (before compaction) layers which are to be continuous over the entire length of the fill. The most permeable borrow material shall be placed in the downstream portions of the embankment. The principal spillway must be installed concurrently with fill placement and not excavated into the embankment.

Compaction - The movement of the hauling and spreading equipment over the fill shall be controlled so that the entire surface of each lift shall be traversed by not less than one tread track of heavy equipment or compaction shall be achieved by a minimum of four complete passes of a sheepsfoot, rubber tired or vibratory roller. Fill material shall contain sufficient moisture such that the required degree of compaction will be obtained with the equipment used. The fill material shall contain sufficient moisture so that if formed into a ball it will not crumble, yet not be so wet that water can be squeezed out.

When required by the reviewing agency the minimum required density shall not be less than 95% of maximum dry density with a moisture content within ±2% of the optimum. Each layer of fill shall be compacted as necessary to obtain that density, and is to be certified by the Engineer at the time of construction. All compaction is to be determined by AASHTO Method T-99 (Standard Proctor).

Cut Off Trench - The cutoff trench shall be excavated into impervious material along or parallel to the centerline of the embankment as shown on the plans. The bottom width of the trench shall be governed by the equipment used for excavation, with the minimum width being four feet. The depth shall be at least four feet below existing grade or as shown on the plans. The side slopes of the trench shall be 1 to 1 or flatter. The backfill shall be compacted with construction equipment, rollers, or hand tampers to assure maximum density and minimum permeability.

Embankment Core - The core shall be parallel to the centerline of the embankment as shown on the plans. The top width of the core shall be a minimum of four feet. The height shall extend up to at least the 10 year water elevation or as shown on the plans. The side slopes shall be 1 to 1 or flatter. The core shall be compacted with construction equipment, rollers, or hand tampers to assure maximum density and minimum permeability. In addition, the core shall be placed concurrently with the outer shell of the embankment.

Structure Backfill
Backfill adjacent to pipes or structures shall be of the type and quality conforming to that specified for the adjoining fill material. The fill shall be placed in horizontal layers not to exceed four inches in thickness and compacted by hand tampers or other manually directed compaction equipment. The material needs to fill completely all spaces under and adjacent to the pipe. At no time during the backfilling operation shall driven-equipment be allowed to operate closer than four feet, measured horizontally, to any part of a structure. Under no circumstances shall equipment be driven over any part of a concrete structure or pipe, unless there is a compacted fill of 24" or greater over the structure or pipe.

Structure backfill may be flowable fill meeting the requirements of Maryland Department of Transportation, State Highway Administration Standard Specifications for Construction and Materials, Section 313 as modified. The mixture shall have a 100-200 psi; 28 day unconfined compressive strength. The flowable fill shall have a minimum pH of 4.0 and a minimum resistivity of 2,000 ohm-cm. Material shall be placed such that a minimum of 6" (measured perpendicular to the outside of the pipe) of flowable fill shall be under (bedding), over and, on the sides of the pipe. It only needs to extend up to the spring line for rigid conduits. Average slump of the fill shall be 7" to assure flowability of the material. Adequate measures shall be taken (sand bags, etc.) to prevent floating the pipe. When using flowable fill, all metal pipe shall be bituminous coated. Any adjoining soil fill shall be placed in horizontal layers not to exceed four inches in thickness and compacted by hand tampers or other manually directed compaction equipment. The material shall completely fill all voids adjacent to the flowable fill zone. At no time during the backfilling operation shall driven-equipment be allowed to operate closer than four feet, measured horizontally, to any part of a structure. Under no circumstances shall equipment be driven over any part of a structure or pipe unless there is a compacted fill of 24" or greater over the structure or pipe. Backfill material outside the structural backfill (flowable fill) zone shall be of the type and quality conforming to that specified for the core of the embankment or other embankment materials.

Pipe Conduits
All pipes shall be circular in cross section.

Corrugated Metal Pipe - All of the following criteria shall apply for corrugated metal pipe:
1. Materials - (Polymer Coated steel pipe) - Steel pipes with polymeric coatings shall have a minimum coating thickness of 0.01 inch (10 mil) on both sides of the pipe. This pipe and its appurtenances shall conform to the requirements of AASHTO Specifications M-245 & M-246 with watertight coupling bands or flanges.

   Materials - (Aluminum Coated Steel Pipe) - This pipe and its appurtenances shall conform to the requirements of AASHTO Specification M-274 with watertight coupling bands or flanges. Aluminum Coated Steel Pipe, when used with flowable fill or when soil and/or water conditions warrant the need for increased durability, shall be fully bituminous coated per requirements of AASHTO Specification M-190 Type A. Any aluminum coating damaged or otherwise removed shall be replaced with cold applied bituminous coating compound. Aluminum surfaces that are to be in contact with concrete shall be painted with one coat of zinc chromate primer or two coats of asphalt.

   Materials - (Aluminum Pipe) - This pipe and its appurtenances shall conform to the requirements of AASHTO Specification M-196 or M-211 with watertight coupling bands or flanges. Aluminum Pipe, when used with flowable fill or when soil and/or water conditions warrant for increased durability shall be fully bituminous coated per requirements of AASHTO Specification M-190 Type A. Aluminum surfaces that are to be in contact with concrete shall be painted with one coat of zinc chromate primer or two coats of asphalt. Hot dip galvanized bolts may be used for connections. The pH of the surrounding soils shall be between 4 and 9.
2. Coupling bands, anti-seep collars, end sections, etc., must be composed of the same material and coatings as the pipe. Metals must be insulated from dissimilar materials with use of rubber or plastic insulating materials at least 24 mils in thickness.
3. Connections - All connections with pipes must be completely watertight. The drain pipe or barrel connection to the riser shall be welded all around when the pipe and riser are metal. Anti-seep collars shall be connected to the pipe in such a manner as to be completely watertight. Dimple bands are not considered to be watertight.

   All connections shall use a rubber or neoprene gasket when joining pipe sections. The end of each pipe shall be re-rolled an adequate number of corrugations to accommodate the bandwidth. The following type connections are acceptable for pipes less than 24 inches in diameter: flanges on both ends of the pipe with a circular 3/8 inch closed cell neoprene gasket, pre-punched to the flange bolt circle, sandwiched between adjacent flanges; a 12-inch wide standard lap type band with 12-inch wide by 3/8-inch thick closed cell circular neoprene gasket; and a 12-inch wide hugger type band with O-ring gaskets having a minimum diameter of 1/2 inch greater than the corrugation depth. Pipes 24 inches in diameter and larger shall be connected by a 24 inch long annular corrugated band using a minimum of 4 (four) rods and lugs, 2 on each connecting pipe end. A 24-inch wide by 3/8-inch thick closed cell circular neoprene gasket will be installed with 12 inches on the end of each pipe. Flanged joints with 3/8 inch closed cell gaskets the full width of the flange is also acceptable.

   Helically corrugated pipe shall have either continuously welded seams or have lock seams with internal caulking or a neoprene bead.
4. Bedding - The pipe shall be firmly and uniformly bedded throughout its entire length. Where rock or soft, spongy or other unstable soil is encountered, all such material shall be removed and replaced with suitable earth compacted to provide adequate support.
5. Backfilling shall conform to "Structure Backfill".
6. Other details (anti-seep collars, valves, etc.) shall be as shown on the drawings.

Reinforced Concrete Pipe - All of the following criteria shall apply for reinforced concrete pipe:
1. Materials - Reinforced concrete pipe shall have bell and spigot joints with rubber gaskets and shall equal or exceed ASTM C-361.
2. Bedding - Reinforced concrete pipe conduits shall be laid in a concrete bedding / cradle for their entire length. This bedding / cradle shall consist of high slump concrete placed under the pipe and up the sides of the pipe at least 50% of its outside diameter with a minimum thickness of 6 inches. Where a concrete cradle is not needed for structural reasons, flowable fill may be used as described in the "Structure Backfill" section of this standard. Gravel bedding is not permitted.
3. Laying pipe - Bell and spigot pipe shall be placed with the bell end upstream. Joints shall be made in accordance with recommendations of the manufacturer of the material. After the joints are sealed for the entire line, the bedding shall be placed so that all spaces under the pipe are filled. Care shall be exercised to prevent any deviation from the original line and grade of the pipe. The first joint must be located within 4 feet from the riser.
4. Backfilling shall conform to "Structure Backfill".
5. Other details (anti-seep collars, valves, etc.) shall be as shown on the drawings.

Plastic Pipe - The following criteria shall apply for plastic pipe:
1. Materials - PVC pipe shall be PVC-1120 or PVC-1220 conforming to ASTM D-1785 or ASTM D-2241. Corrugated High Density Polyethylene (HDPE) pipe, couplings and fittings shall conform to the following: 4" – 10" inch pipe shall meet the requirements of AASHTO M252 Type S, and 12" through 24" inch shall meet the requirements of AASHTO M294 Type S.
2. Joints and connections to anti-seep collars shall be completely watertight.
3. Bedding -The pipe shall be firmly and uniformly bedded throughout its entire length. Where rock or soft, spongy or other unstable soil is encountered, all such material shall be removed and replaced with suitable earth compacted to provide adequate support.
4. Backfilling shall conform to "Structure Backfill".
5. Other details (anti-seep collars, valves, etc.) shall be as shown on the drawings.

Drainage Diaphragms - When a drainage diaphragm is used, a registered professional engineer will supervise the design and construction inspection.

Concrete
Concrete shall meet the requirements of Maryland Department of Transportation, State Highway Administration Standard Specifications for Construction and Materials, Section 414, Mix No. 3.

Rock Riprap
Rock riprap shall meet the requirements of Maryland Department of Transportation, State Highway Administration Standard Specifications for Construction and Materials, Section 311.

Geotextile shall be placed under all riprap and shall meet the requirements of Maryland Department of Transportation, State Highway Administration Standard Specifications for Construction and Materials, Section 921.09, Class C.

Care of Water during Construction
All work on permanent structures shall be carried out in areas free from water. The Contractor shall construct and maintain all temporary dikes, levees, cofferdams, drainage channels, and stream diversions necessary to protect the areas to be occupied by the permanent works. The contractor shall also furnish, install, operate, and maintain all necessary pumping and other equipment required for removal of water from various parts of the work and for maintaining the excavations, foundation, and other parts of the work free from water as required or directed by the engineer for constructing each part of the work. After having served their purpose, all temporary protective works shall be removed or leveled and graded to the extent required to prevent obstruction in any degree whatsoever of the flow of water to the spillway or outlet works and so as not to interfere in any way with the operation or maintenance of the structure. Stream diversions shall be maintained until the full flow can be passed through the permanent works. The removal of water from the required excavation and the foundation shall be accomplished in a manner and to the extent that will maintain stability of the excavated slopes and bottom required excavations and will allow satisfactory performance of all construction operations. During the placing and compacting of material in required excavations, the water level at the locations being refilled shall be maintained below the bottom of the excavation at such locations which may require draining the water sumps from which the water shall be pumped.

Stabilization
All borrow areas shall be graded to provide proper drainage and left in a slightly condition. All exposed surfaces of the embankment, spillway, spoil and borrow areas, and berms shall be stabilized by seeding, liming, fertilizing and mulching in accordance with the Natural Resources Conservation Service Standards and Specifications for Critical Area Planting (MD-342) or as shown on the accompanying drawings.

Erosion and Sediment Control
Construction operations will be carried out in such a manner that erosion will be controlled and water and air pollution minimized. State and local laws concerning pollution abatement will be followed. Construction plans shall detail erosion and sediment control measures.

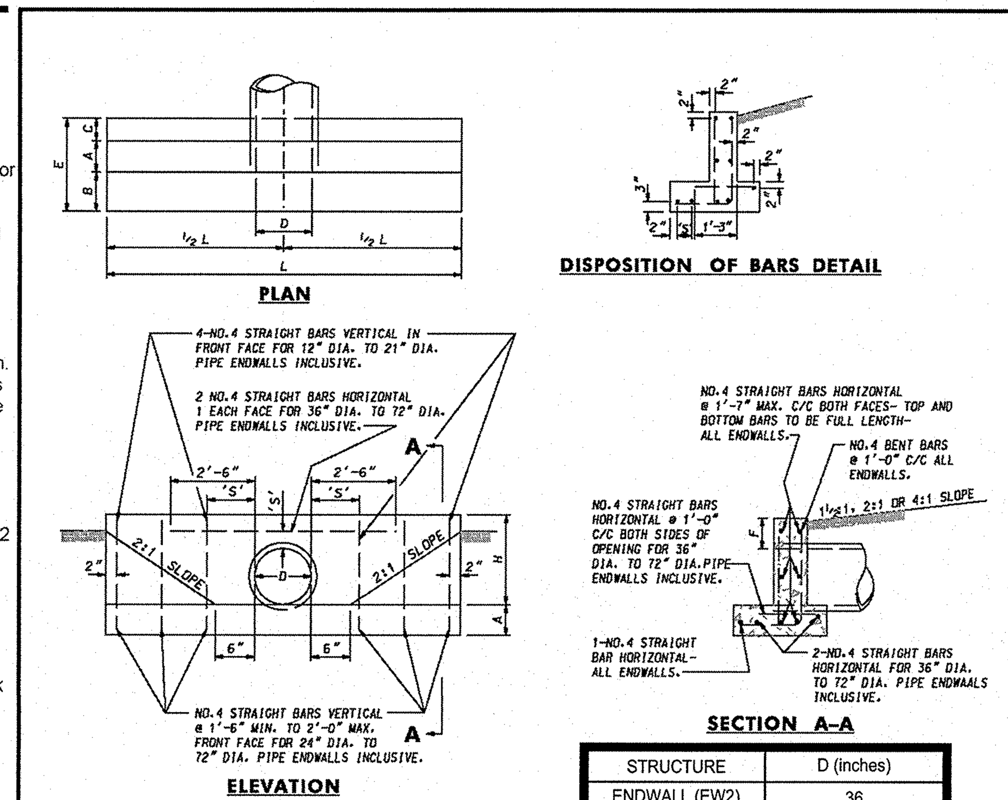

STRUCTURE	D (inches)
ENDWALL (EW2)	36
HEADWALL (HW1)	27

QUANTITIES FOR ESTIMATING PURPOSES ONLY

OPENING D INCHES	AREA SQ.FT.	A	B	C	E	F	H	L	CONC. C.Y.	STEEL LBS.
12	0.79	9"	6"	6"	1'-9"	9"	1'-9"	6'-6"	0.61	41
15	1.23	9"	6"	6"	1'-9"	9"	2'-0"	7'-9"	0.77	47
18	1.77	9"	6"	6"	1'-9"	9"	2'-3"	9'-0"	0.95	54
21	2.40	9"	6"	6"	1'-9"	9"	2'-6"	10'-3"	1.14	70
24	3.14	9"	14"	6"	2'-5"	9"	2'-9"	11'-6"	1.56	80
27	3.98	9"	14"	6"	2'-5"	9"	3'-0"	12'-10"	1.82	88
* 30	4.91	9"	14"	6"	2'-5"	12"	3'-6"	14'-2"	2.22	98
33	5.94	9"	14"	6"	2'-5"	12"	3'-9"	15'-5"	2.48	105
* 36	7.07	12"	16"	10"	3'-2"	12"	4'-0"	16'-8"	4.16	182
42	9.62	12"	16"	10"	3'-2"	12"	4'-6"	19'-2"	5.07	206
48	12.57	12"	16"	10"	3'-2"	12"	5'-0"	21'-8"	6.09	244
54	15.90	12"	20"	12"	3'-8"	12"	5'-6"	24'-2"	7.62	275
60	19.64	12"	20"	12"	3'-8"	12"	6'-0"	26'-8"	8.82	304
72	28.27	12"	20"	12"	3'-8"	12"	7'-0"	31'-8"	11.46	377

'S' DISTANCES

4" FOR 12" DIA. TO 21" DIA. PIPES INCLUSIVE.
6" FOR 24" DIA. TO 36" DIA. PIPES INCLUSIVE.
8" FOR 42" DIA. TO 72" DIA. PIPES INCLUSIVE.

GENERAL NOTES

SPECIFICATIONS: LATEST S.H.A.
CONCRETE SHALL BE MIX NO.2
REINFORCING: DEFORMED STEEL BARS-NO.4
CHAMFER: ALL EXPOSED EDGES 1"x1" OR AS DIRECTED

* • MODIFY 36" FOR D=21" WITH L = 10'-3"
• MODIFY 30" FOR D=12" WITH L = 6'-6"

SPECIFICATION 305 | CATEGORY CODE ITEMS
APPROVED (signature) DIRECTOR – OFFICE OF HIGHWAY DEVELOPMENT
APPROVAL • SHA REVISIONS: APPROVAL 8-28-86, REVISED 10-1-01, REVISED, REVISED
APPROVAL • FEDERAL HIGHWAY ADMINISTRATION: APPROVAL 12-12-86, REVISED, REVISED, REVISED

Maryland Department of Transportation
STATE HIGHWAY ADMINISTRATION
STANDARDS FOR HIGHWAYS AND INCIDENTAL STRUCTURES
STANDARD TYPE C ENDWALL
METAL OR CONCRETE ROUND PIPE
STANDARD NO. MD 354.01

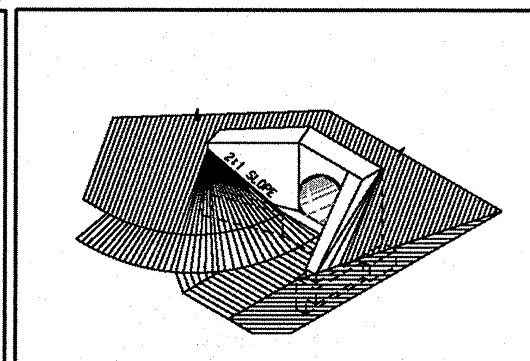

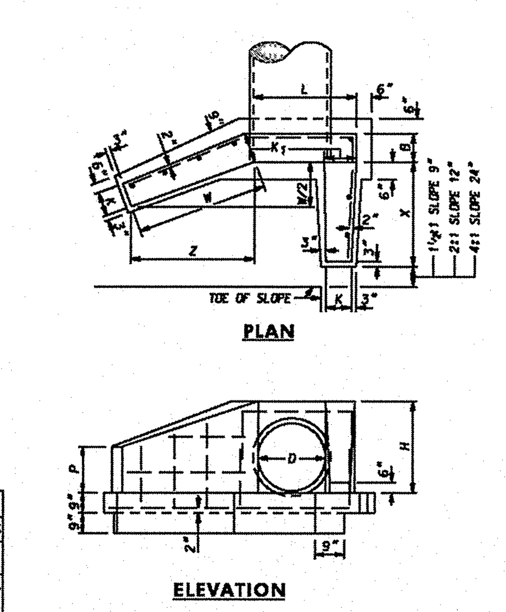

QUANTITIES FOR ESTIMATING PURPOSES ONLY

SLOPE 1½:1

PIPE DIA. D	AREA SQ.FT.	ENDWALL L	ENDWALL B	ENDWALL H	WINGS W	WINGS X	WINGS Z	WINGS K1	WINGS K	WINGS P	1-ENDWALL 2-WINGS CONC. C.Y.	1-ENDWALL 2-WINGS STEEL LBS.
12"	0.79	1'-9"	9"	1'-8"	2'-0"	1'-3"	1'-9"	9"	7"	1'-4"	0.51	38
15"	1.23	2'-0"	9"	2'-0"	2'-4"	1'-9"	2'-0"	9"	7"	1'-5"	0.63	42
18"	1.77	2'-3"	9"	2'-3"	2'-8"	2'-1"	2'-4"	9"	8"	1'-6"	0.77	48
21"	2.40	2'-6"	9"	2'-7"	3'-1"	2'-6"	2'-8"	9"	8"	1'-9"	1.10	61
24"	3.14	3'-0"	12"	2'-11"	3'-6"	2'-11"	3'-0"	12"	11"	2'-1"	1.43	73
27"	3.98	3'-3"	12"	3'-3"	3'-11"	3'-4"	3'-4"	12"	11"	2'-3"	1.66	85
30"	4.91	3'-6"	12"	3'-6"	4'-4"	3'-9"	3'-9"	12"	11"	2'-4"	1.88	96
33"	5.94	3'-9"	12"	3'-9"	4'-8"	4'-1"	4'-0"	12"	11"	2'-6"	2.10	107
36"	7.07	4'-0"	12"	4'-0"	5'-0"	4'-6"	4'-4"	12"	11"	2'-7"	2.32	118
42"	9.62	4'-6"	12"	4'-7"	5'-9"	5'-4"	5'-0"	12"	11"	2'-11"	2.85	144
48"	12.57	5'-0"	12"	5'-1"	6'-4"	6'-2"	5'-6"	12"	11"	3'-3"	3.37	170

SLOPE 2:1

PIPE DIA. D	AREA SQ.FT.	ENDWALL L	ENDWALL B	ENDWALL H	WINGS W	WINGS X	WINGS Z	WINGS K1	WINGS K	WINGS P	1-ENDWALL 2-WINGS CONC. C.Y.	1-ENDWALL 2-WINGS STEEL LBS.
12"	0.79	1'-9"	9"	1'-7"	2'-3"	1'-10"	2'-0"	9"	7"	1'-3"	0.55	38
15"	1.23	2'-0"	9"	1'-11"	2'-6"	2'-6"	2'-2"	9"	8"	1'-5"	0.73	46
18"	1.77	2'-3"	9"	2'-2"	3'-0"	3'-0"	2'-7"	9"	8"	1'-7"	0.89	57
21"	2.40	2'-6"	9"	2'-5"	3'-6"	3'-6"	3'-0"	9"	8"	1'-10"	1.27	70
24"	3.14	3'-0"	12"	2'-9"	4'-0"	4'-0"	3'-5"	12"	11"	2'-1"	1.64	82
27"	3.98	3'-3"	12"	3'-0"	4'-4"	4'-6"	3'-9"	12"	11"	2'-3"	1.89	98
30"	4.91	3'-6"	12"	3'-4"	4'-8"	5'-2"	4'-1"	12"	11"	2'-6"	2.14	113
33"	5.94	3'-9"	12"	3'-7"	5'-0"	5'-8"	4'-4"	12"	11"	2'-8"	2.31	123
36"	7.07	4'-0"	12"	3'-10"	5'-4"	6'-2"	4'-7"	12"	11"	2'-10"	2.48	132
* 42"	9.62	4'-6"	12"	4'-5"	6'-4"	7'-4"	5'-6"	12"	11"	3'-2"	3.30	163
48"	12.57	5'-0"	12"	4'-11"	7'-0"	8'-4"	6'-1"	12"	11"	3'-6"	3.85	193

GENERAL NOTES

SPECIFICATIONS: LATEST S.H.A.
CONCRETE SHALL BE MIX NO.2
REINFORCING: DEFORMED STEEL BARS
VERTICAL NO.6 BARS 12" C/C
HORIZONTAL NO.4 BARS 12" C/C HOOKED ON ONE END
CHAMFER: ALL EXPOSED EDGES 1"x1" OR AS DIRECTED.

* • MODIFY 42" FOR W=3.5'

SLOPE 4:1

PIPE DIA. D	AREA SQ.FT.	ENDWALL L	ENDWALL B	ENDWALL H	WINGS W	WINGS X	WINGS Z	WINGS K1	WINGS K	WINGS P	1-ENDWALL 2-WINGS CONC. C.Y.	1-ENDWALL 2-WINGS STEEL LBS.
12"	0.79	1'-9"	9"	1'-5"	2'-6"	3'-8"	2'-2"	9"	8"	1'-3"	0.81	45
15"	1.23	2'-0"	9"	1'-9"	3'-0"	5'-0"	2'-7"	9"	8"	1'-5"	1.04	68
18"	1.77	2'-3"	9"	2'-0"	3'-6"	6'-0"	3'-0"	9"	8"	1'-7"	1.26	74
21"	2.40	2'-6"	9"	2'-3"	4'-0"	7'-0"	3'-5"	9"	8"	1'-11"	1.75	89
24"	3.14	3'-0"	12"	2'-6"	4'-6"	8'-0"	3'-11"	12"	11"	2'-2"	2.23	104
27"	3.98	3'-3"	12"	2'-9"	5'-0"	9'-2"	4'-4"	12"	11"	2'-4"	2.64	126
30"	4.91	3'-6"	12"	3'-1"	5'-6"	10'-4"	4'-9"	12"	11"	2'-7"	3.04	147
33"	5.94	3'-9"	12"	3'-4"	6'-0"	11'-4"	5'-2"	12"	11"	2'-9"	3.40	164
36"	7.07	4'-0"	12"	3'-7"	6'-6"	12'-4"	5'-8"	12"	11"	3'-0"	3.75	180
42"	9.62	4'-6"	12"	4'-2"	7'-6"	14'-8"	6'-6"	12"	11"	3'-5"	4.67	218
48"	12.57	5'-0"	12"	4'-8"	8'-3"	16'-8"	7'-2"	12"	11"	3'-10"	5.57	277

SPECIFICATION 305 | CATEGORY CODE ITEMS
APPROVED (signature) DIRECTOR – OFFICE OF HIGHWAY DEVELOPMENT
APPROVAL • SHA REVISIONS: APPROVAL 8-28-86, REVISED 10-1-01, REVISED, REVISED
APPROVAL • FEDERAL HIGHWAY ADMINISTRATION: APPROVAL 12-12-86, REVISED, REVISED, REVISED

Maryland Department of Transportation
STATE HIGHWAY ADMINISTRATION
STANDARDS FOR HIGHWAYS AND INCIDENTAL STRUCTURES
STANDARD TYPE F ENDWALL
METAL OR CONCRETE ROUND PIPE
STANDARD NO. MD 358.01

REVOLUTION Assembly

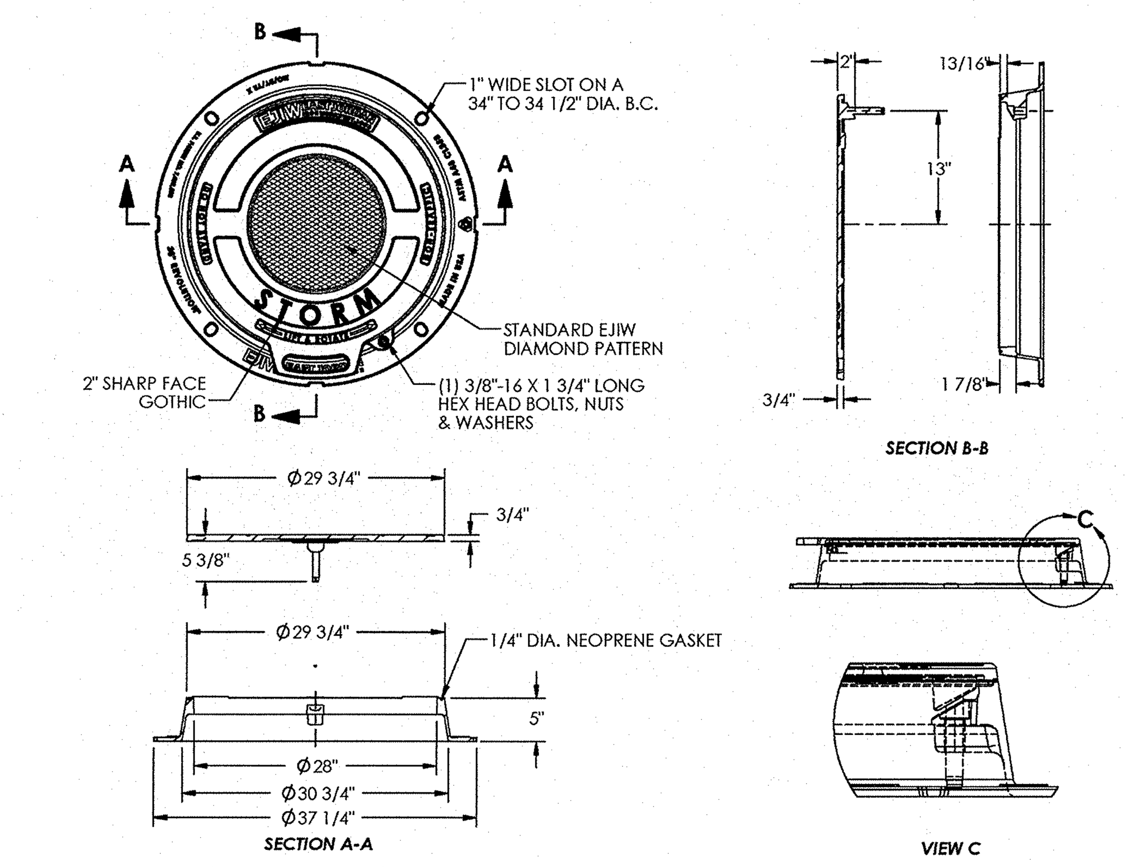

NOTE: ENTIRE FRAME AND COVER TO BE PAINTED BATTLESHIP GRAY.

Product Number
00189061R01
Design Features
-Materials
Cover
Gray Iron (CL35)
Frame
Gray Iron (CL35)

-Design Load
Non-Traffic
-Open Area
n/a
-Coating
Undipped
-√ Designates Machined Surface

Certification
-ASTM A48
-
-Country of Origin: USA

Major Components
RC00189061
RF280503701

Drawing Revision
10/27/2009 Designer: GAD
3/2/2012 Revised By: SDC

Disclaimer
Weights (lbs/kg), dimensions (inches/mm) and drawings provided for your guidance. We reserve the right to modify specifications without prior notice.

CONFIDENTIAL: This drawing is the property of EJ Group, Inc. and embodies confidential information, registered marks, patents, trade secret information, and/or know-how that is the property of EJ Group, Inc. Copyright © 2011 EJ Group, Inc. All rights reserved.

Contact
800.626.4653
ejco.com

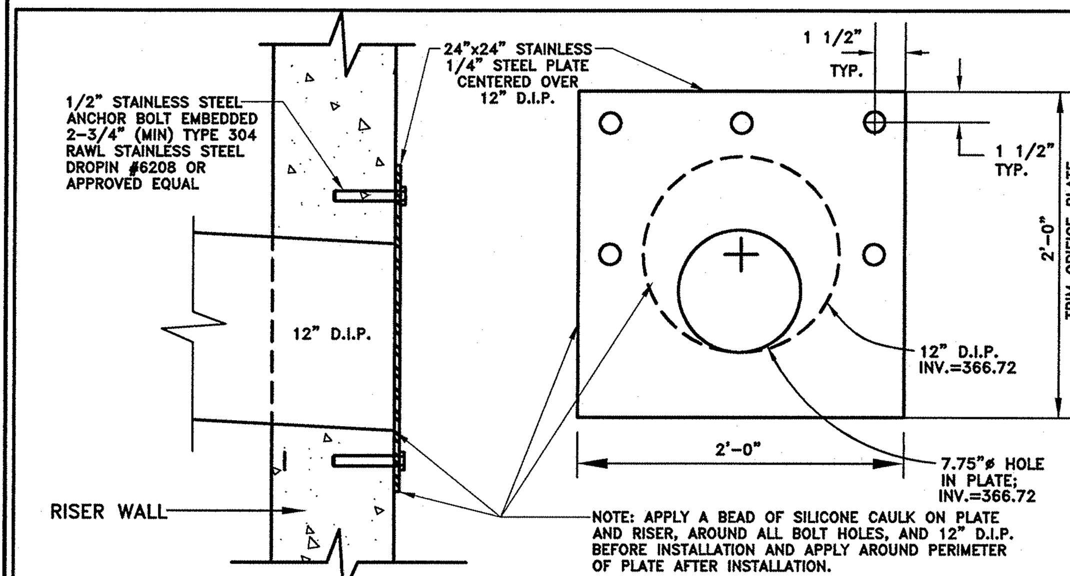

ORIFICE PLATE DETAIL
(LOCATION: SEE RISER DETAILS)
SCALE 1" = 1'

GRAPHIC SCALE
1 0 0.5 1 2
SCALE: 1" = 1'

PUBLIC STRUCTURE SCHEDULE (MCDEP MAINTAINED)

NO.	TYPE	COORDINATES NORTHING	COORDINATES EASTING	TOP ELEVATION UPPER	TOP ELEVATION LOWER	BASE DIAMETER	THROAT DESIGN	STEP LOCATION	REMARKS
ES1	END SECTION	N 554649.19	E 1247290.96	INVERT =	365.36	-	-	-	EX. TO REMAIN (72")
ES2	END SECTION	N 554654.17	E 1247305.25	INVERT =	365.16	-	-	-	EX. TO REMAIN (66")
CS1	RISER	-	-	382.50	-	-	-	-	27' x 6' CAST-IN-PLACE, SEE SHEET SWM-4 FOR COORDINATES
CS2	RISER	N 554766.36	E 1247250.44	380.16	-	96"	-	-	EX. TO BE REMOVED
CS3	RISER	N 554769.01	E 1247266.38	380.22	-	90"	-	-	EX. TO BE REMOVED
MR1	MINI RISER	N 554780.91	E 1247263.88	375.08	-	24"	-	-	SEE DETAIL SHEET SWM-7
HW1	HEADWALL	N 554786.65	E 1247263.58	367.96	-	-	-	-	MSHA ST 354.01 (D=30", MODIFIED FOR D=12") INCLUDING LOW FLOW TRASH RACK. SEE DETAIL SHEET SWM-5.

NOTES:
1. NO PIPE SHALL BE CONSTRUCTED INTO THE CORNER OF A SQUARE OR RECTANGULAR STORM DRAIN STRUCTURE (TO BE USED AS A SAFETY MEASURE), PER MSHA STD. No. MD-384.13 - SEE DETAIL ON SHEET SD-3.
2. ALL PRECAST STRUCTURES AND SUPPLIERS OF "ALTERNATIVE EQUAL STRUCTURES" ARE TO BE PREVIOUSLY APPROVED BY MCDOT.
3. COORDINATES TO MANHOLES ARE TO CENTER OF STRUCTURE.
4. COORDINATES TO A-INLETS ARE TO CENTER OF STRUCTURE AT FRONT OF CURB.
5. COORDINATES TO ENDSECTION ARE TO CENTER OF LOWER FLARED END.
6. COORDINATES TO ENDWALL/HEADWALL ARE TO TOP CENTER OF WALL.

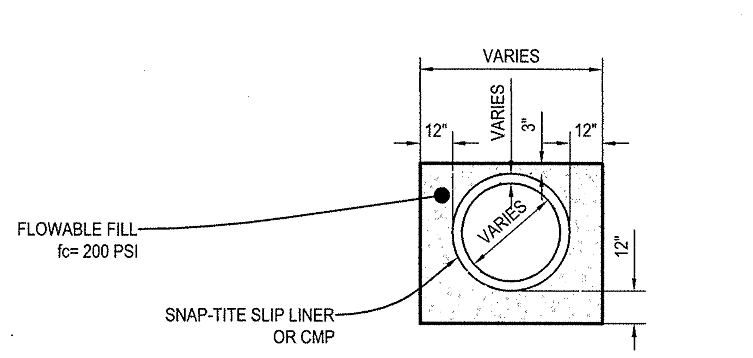

BACK FILLING AROUND EXPOSED SNAP-TITE PIPE OR CMP
SECTION C-C
SCALE 1" = 5'

GRAPHIC SCALE
5 0 2.5 5 10
SCALE: 1" = 5'

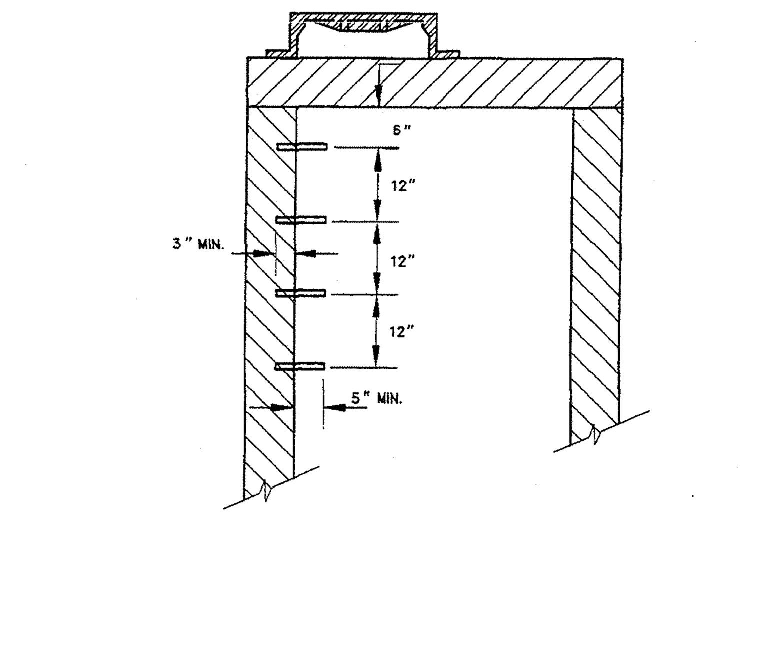

GENERAL NOTES

1. STEPS ARE TO BE MADE OF: (1) CAST IRON, 1 INCH SQUARE ; (2) 3/8 INCH STEEL ROD EMBEDDED IN POLYPROPYLENE PLASTIC ; OR (3) ALUMINUM ALLOY, 7/8 INCH BY 13/16 INCH WITH A MINIMUM EMBEDMENT OF 3 INCHES, A MINIMUM PROJECTION OF 5 INCHES, AND A MINIMUM WIDTH OF 10 INCHES.
2. STEPS SHALL BE PLACED IN VERTICAL ALIGNMENT, 12 INCHES APART, AND SHALL ALIGN WITH THE COVER OPENING.
3. STEPS ARE NOT REQUIRED IN STRUCTURES LESS THAN 4 FEET IN DEPTH.

P:\DOTSTD\STD55A 6-24-94 1:10:37 pm EST

APPROVED JAN 5/96 (DATE) | REVISED
(signature) DIRECTOR, DEPT. OF TRANS.
(signature) CHIEF, DIV. OF ENG. SERVICES

MONTGOMERY COUNTY DEPARTMENT OF TRANSPORTATION
MANHOLE AND INLET STEPS
STANDARD NO. MC-520.01

PUBLIC PIPE SCHEDULE (MCDEP MAINTAINED)

PIPE SIZE	TYPE	LENGTH (LF)
12"	DIP CL 51	12
6"	PVC SCH. 80 SLOTTED	25
4"	PVC SCH. 80 SLOTTED	32
4"	PVC SCH. 80 SOLID	50

GENERAL NOTES:
1. THIS PLAN SHALL ONLY BE USED FOR THE CONSTRUCTION OF STORMWATER MANAGEMENT AND ASSOCIATED STORMWATER MANAGEMENT IMPROVEMENTS AS SHOWN. THIS PLAN SHALL NOT BE USED FOR ANY OTHER CONSTRUCTION PURPOSE. THIS PLAN SHALL NOT BE USED FOR GRADING OF THE SITE OTHER THAN AREAS WITHIN THE SWM EASEMENT.

MISS UTILITY

Call "Miss Utility" at 1-800-257-7777, 48 hours prior to the start of work. The excavator must notify all public utility companies with underground facilities in the area of proposed excavation and have those facilities located by the utility companies prior to commencing excavation. The excavator is responsible for compliance with requirements of Chapter 36A of the Montgomery County Code.

STATE OF MARYLAND – JEFFREY BRIAN BLASS – PROFESSIONAL ENGINEER – 32457

PROFESSIONAL CERTIFICATION
I HEREBY CERTIFY THAT THESE DOCUMENTS WERE PREPARED OR APPROVED BY ME, AND THAT I AM A DULY LICENSED PROFESSIONAL ENGINEER UNDER THE LAWS OF THE STATE OF MARYLAND.
LICENSE #: 32457
EXPIRATION DATE: 06/20/2016

STORMWATER MANAGEMENT NOTES AND DETAILS

REGIONAL STORMWATER MANAGEMENT
POND REPAIR AND RETROFIT (2014)

CHADSWOOD

GERMANTOWN (9th) ELECTION DISTRICT
MONTGOMERY COUNTY, MARYLAND

CPJ Associates
Charles P. Johnson & Associates, Inc.
Civil and Environmental Engineers • Planners • Landscape Architects • Surveyors
1751 Elton Rd., Ste. 300 Silver Spring, MD 20903 301-434-7000 Fax: 301-434-9394
www.cpja.com • Silver Spring, MD • Gaithersburg, MD • College Park, MD • Frederick, MD • Fairfax, VA

CLIENT: MONTGOMERY COUNTY
DEPARTMENT OF ENVIRONMENTAL PROTECTION
255 ROCKVILLE PIKE SUITE 120
ROCKVILLE, MARYLAND 20850
CONTACT: GENE GOPENKO, P.E.
PHONE:(240) 777-7723

COPYRIGHT © LATEST DATE HEREON CHARLES P. JOHNSON & ASSOCIATES, INC. ALL RIGHTS RESERVED, UNAUTHORIZED USE OR REPRODUCTION IS PROHIBITED.

PRELIMINARY PLAN NO: N/A	SITE PLAN NO: N/A
DESIGN JBB	SHEET 12 OF 21
DRAFT ADG	SWM-5 / SWM-8
DATE JULY, 2014	
SCALE AS-SHOWN	FILE NO.: 43-274-24.1

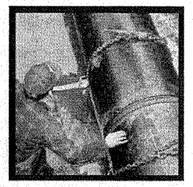

Chapter 2

Ease of Installation

People

Highway departments can use their own crew — no special training is necessary. Using only shovels, a backhoe, and come-along chains, a team of four men can easily rehabilitate a culvert. Buy the Snap-Tite Culvert Lining System today, keep it in your yard until bad weather causes some down time for your people and install it that day. What would be wasted payroll time becomes a protective, money-saving project.

Equipment

Snap-Tite is so easy to install that most jobs can be completed with a backhoe, shovels, a come-along and chains.

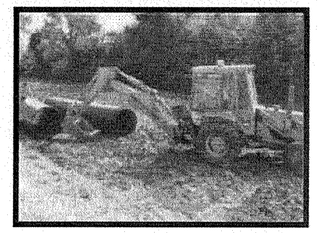

Product

This diagram illustrates the design attributes and numbering system of Snap-Tite:

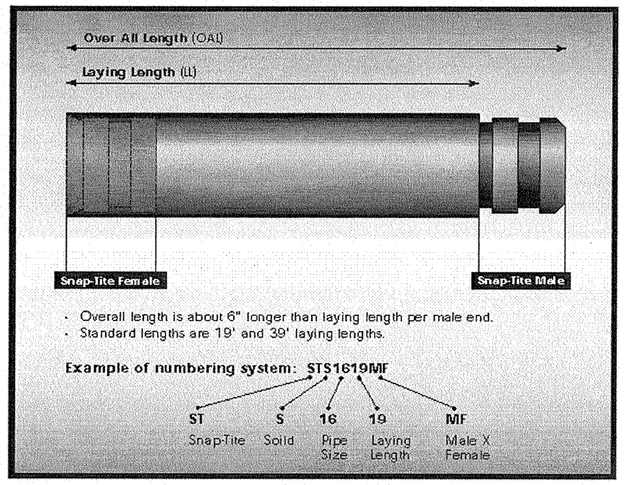

Step 1 – Select and prepare the existing culvert. Inspect the culvert to ensure the liner can be inserted without obstruction. Flush and/or clean the existing culvert.

Step 2 – Insert one end of Snap-Tite Liner into existing culvert. This can be done by pulling or pushing the pipe using a variety of techniques. Leave about five feet exposed prior to this step. It may be necessary to create a "nose cone" by cutting the ends of the pipe. See diagram of nose cone at the end of this section.

Step 3 – Position the next section of Snap-Tite Liner with proper alignment. Place the opposing end of a second section against the exposed end of the first section. The two sections must be in alignment and have the same slope.

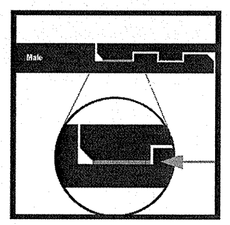

Step 4 – Install a gasket. Install a gasket on the male end to ensure a water-tight seal. The gasket should be installed in the groove furthest from the end.

Step 5 – Attach the chains and couplings. Double-wrap the chains approximately two feet from the coupling or tighten with chain binders. Attach one chain hoist on each side of the coupling.

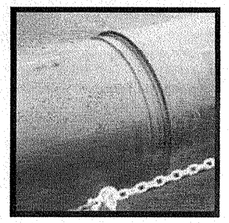

Step 6 – Snap liner together. Align the ends with the male bevel inside of the female bevel. Pull the couplings together, forcing the female end to expand and allow the male end to move into the female end. When lands and grooves are aligned the couplings will "snap" and lock together.

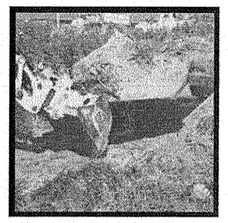

Step 7 – Push joined liners into culvert and repeat until completely lined. Remove chains, push joined liners into culvert and repeat steps 1-5. Each new piece of pipe is snapped onto the preceding pipe and pushed or pulled into the culvert, leaving enough pipe protruding from the culvert to join with the next length of pipe.

Step 8 – Seal the culvert ends. Seal the annular space between the Snap-Tite liner and the existing pipe with an appropriate grout.

Step 9 – Grout the annular space.
It is recommended that the annular space between the existing culvert and the liner pipe be grouted. This will help fill the voids created by previous washouts, provide additional structural support, and prevent point loading. For specifications or more information, call your local Ready Mix supplier or the National Ready Mixed Concrete Association at (301) 587-1400. Enclosed in this section is a suggested guide specification from the Texas Aggregates and Concrete Association for flowable fill.

Nose-Cone Typical

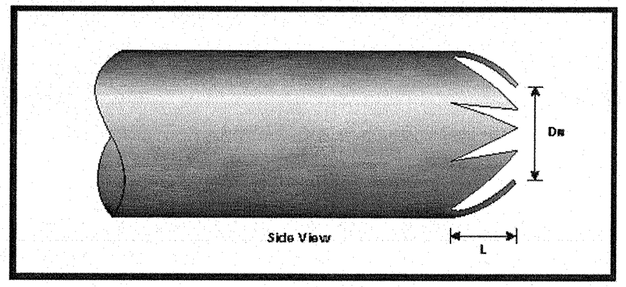

Side View
L = about 12" to 16"
D_N = about 3/4 Dia. of pipe

Example: 24" pipe, D_N = 18"
36" pipe, D_N = 27"
42" pipe, D_N = 32"

End View
Make 8 Dove Tails
Drill hole -1/2 ± about 1" from point of Dove Tail.

Draw pieces toward each other by connecting wire to opposite holes and twisting the wire to tighten.

All dimensions can be varied to suit specific conditions.

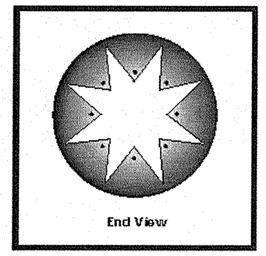

Cement Based Grout for Sliplining

Description and Materials: Grout must be composed of Portland cement, fine sand, admixtures, and potable water proportioned as to create a concrete that is pumpable yet remains dense, to completely fill void between the host pipe and the pipe liner. It is preferred that the grout be mixed on site. The grout mix will be cement and water proportioned in the ratio of 1 cubic foot of cement to 1 cubic foot (7.5 gallons) of water. The mix ratio may be modified by grout pump operator to insure filling of all voids. Grout must meet ASTM C1107. Grout must remain fluid for at least 2 hours after it was pumped, and must develop minimum compressive strength of 500 psi within 7 days. Grout must be tested in accordance with ASTM C109.

Execution: The annular void shall be grouted solid by injecting grout from one end of the pipe run and allowing it to flow toward the other end either by gravity or pump. Venting of the annular void shall be performed to assure uniform filling of the void space during the grouting process. Care must be taken so that the grout does not float or damage the liner. The contractor must follow the HDPE liner manufacturer's recommendations for allowable grouting pressure based on the pipe size.

MISS UTILITY

Call "Miss Utility" at 1-800-257-7777, 48 hours prior to the start of work. The excavator must notify all public utility companies with underground facilities in the area of proposed excavation and have those facilities located by the utility companies prior to commencing excavation. The excavator is responsible for compliance with requirements of Chapter 36A of the Montgomery County Code.

GENERAL NOTES:
1. THIS PLAN SHALL ONLY BE USED FOR THE CONSTRUCTION OF STORMWATER MANAGEMENT AND ASSOCIATED STORMWATER MANAGEMENT IMPROVEMENTS AS SHOWN. THIS PLAN SHALL NOT BE USED FOR ANY OTHER CONSTRUCTION PURPOSE. THIS PLAN SHALL NOT BE USED FOR GRADING OF THE SITE OTHER THAN AREAS WITHIN THE SWM EASEMENT.

STATE OF MARYLAND — JEFFREY BRIAN BAKER — No. 22457 — PROFESSIONAL ENGINEER
7/18/2014

PROFESSIONAL CERTIFICATION
I HEREBY CERTIFY THAT THESE DOCUMENTS WERE PREPARED OR APPROVED BY ME, AND THAT I AM A DULY LICENSED PROFESSIONAL ENGINEER UNDER THE LAWS OF THE STATE OF MARYLAND.
LICENSE #: 22457
EXPIRATION DATE: 06/30/2016

STORMWATER MANAGEMENT NOTES AND DETAILS

REGIONAL STORMWATER MANAGEMENT
POND REPAIR AND RETROFIT (2014)

CHADSWOOD

GERMANTOWN (9th) ELECTION DISTRICT
MONTGOMERY COUNTY, MARYLAND

CPJ Associates
Charles P. Johnson & Associates, Inc.
Civil and Environmental Engineers • Planners • Landscape Architects • Surveyors
1751 Elton Rd., Ste. 300 Silver Spring, MD 20903 301-434-7000 Fax: 301-434-9594
www.cpja.com • Silver Spring, MD • Gaithersburg, MD • College Park, MD • Frederick, MD • Fairfax, VA

CLIENT: MONTGOMERY COUNTY
DEPARTMENT OF ENVIRONMENTAL PROTECTION
255 ROCKVILLE PIKE SUITE 120
ROCKVILLE, MARYLAND 20850
CONTACT: GENE GOPENKO, P.E.
PHONE:(240) 777-7723

PRELIMINARY PLAN NO: N/A		SITE PLAN NO: N/A	
DESIGN JBB		SHEET 13	OF 21
DRAFT ADG		SWM-6	SWM-8
DATE JULY, 2014		FILE NO : 43-274-24.1	
SCALE AS-SHOWN			

COPYRIGHT © LATEST DATE HEREON CHARLES P. JOHNSON & ASSOCIATES, INC. ALL RIGHTS RESERVED, UNAUTHORIZED USE OR REPRODUCTION IS PROHIBITED.

Attached Xrefs: _TB22x34 - PUBLIC/TB22x34/06-R-T002/06-V-T001/06-R-T001

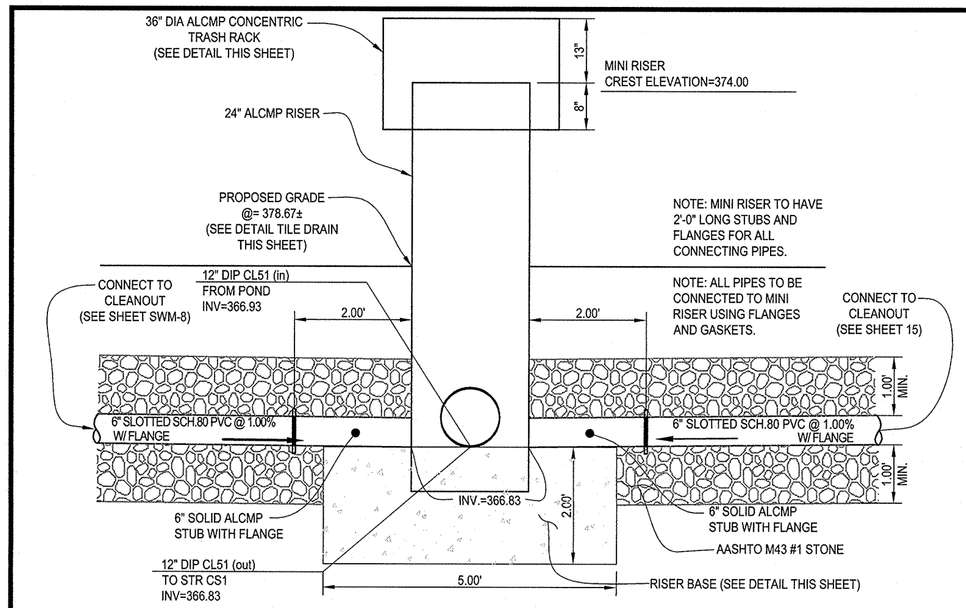

PROPOSED MINI RISER DETAIL (MR)
SCALE: 1"=2'

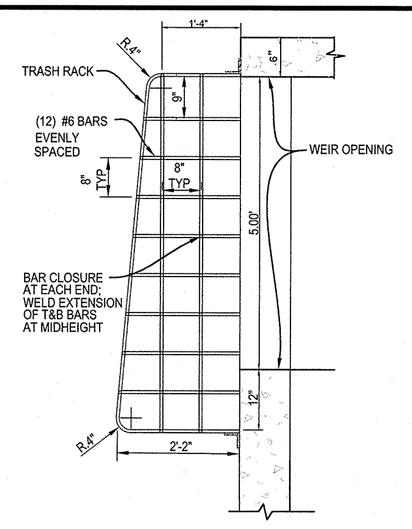

NORTH TRASH RACK SIDE VIEW
SCALE: 1"=2'

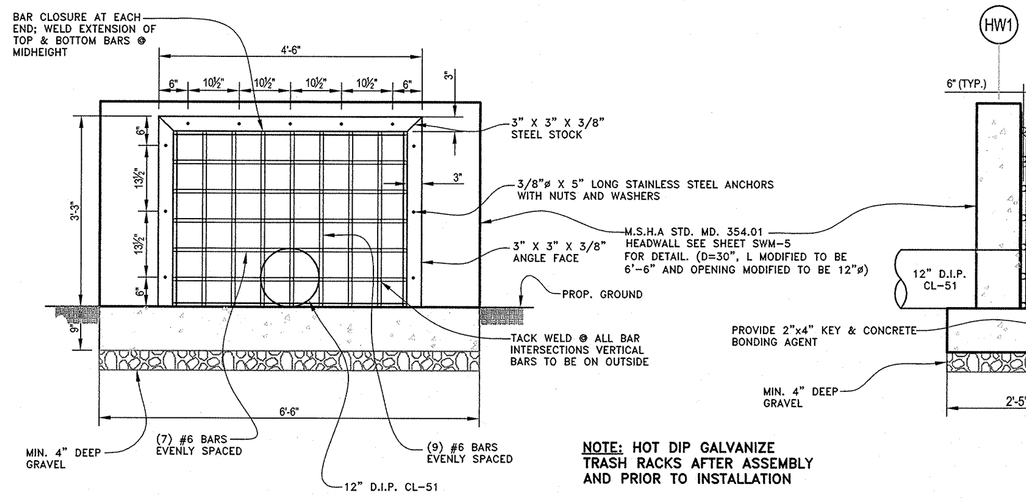

FRONT FACE VIEW
SCALE: 1"=2'

NOTE: HOT DIP GALVANIZE TRASH RACKS AFTER ASSEMBLY AND PRIOR TO INSTALLATION

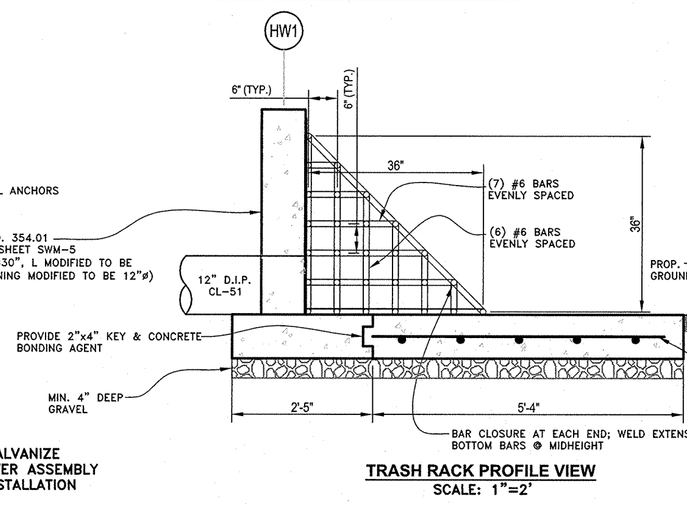

TRASH RACK PROFILE VIEW
SCALE: 1"=2'

LOW FLOW TRASH RACK @ WEIR WALL
SCALE: 1"=2'

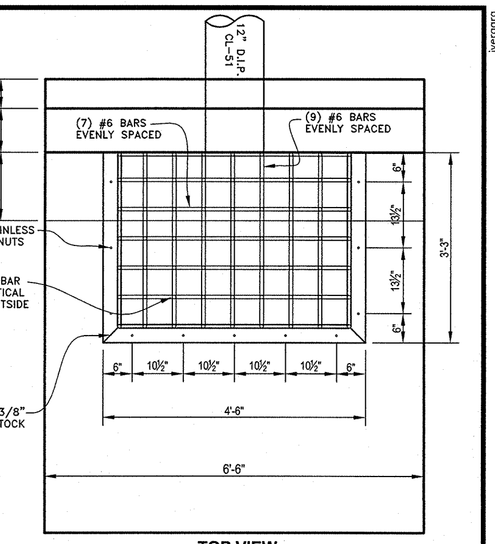

TOP VIEW
SCALE: 1"=2'

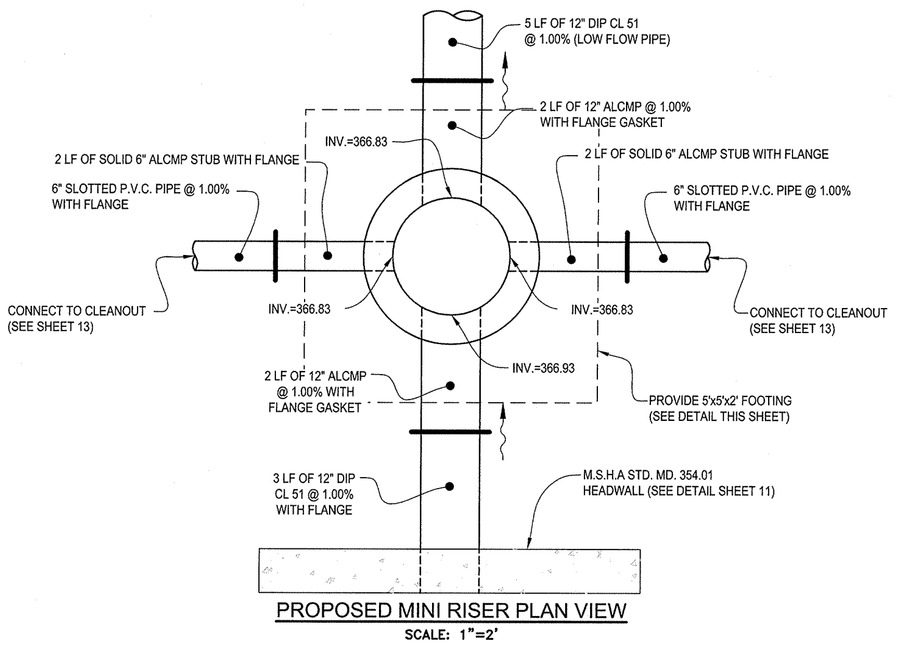

PROPOSED MINI RISER PLAN VIEW
SCALE: 1"=2'

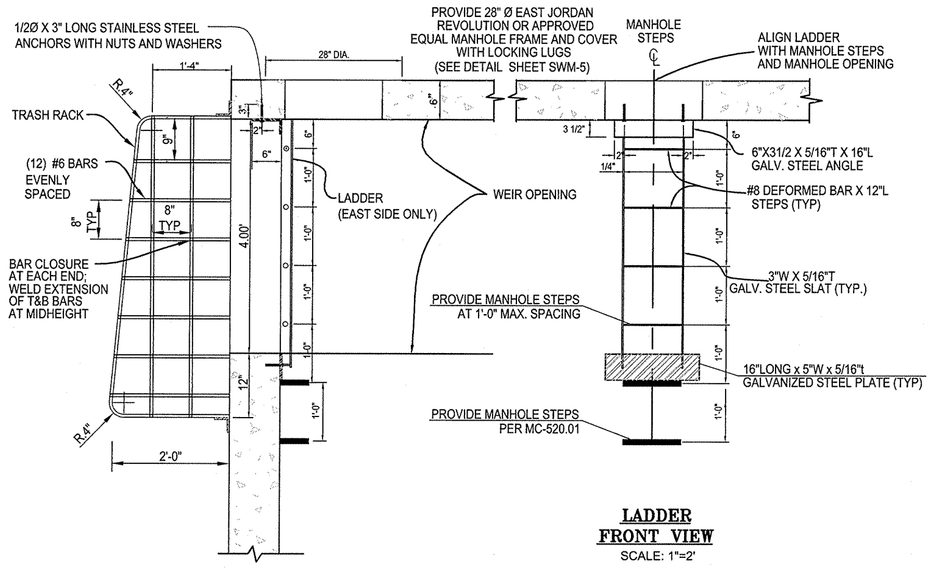

TRASH RACK SIDE VIEW (EAST, WEST, SOUTH SIDES)
SCALE: 1"=2'

LADDER FRONT VIEW
SCALE: 1"=2'

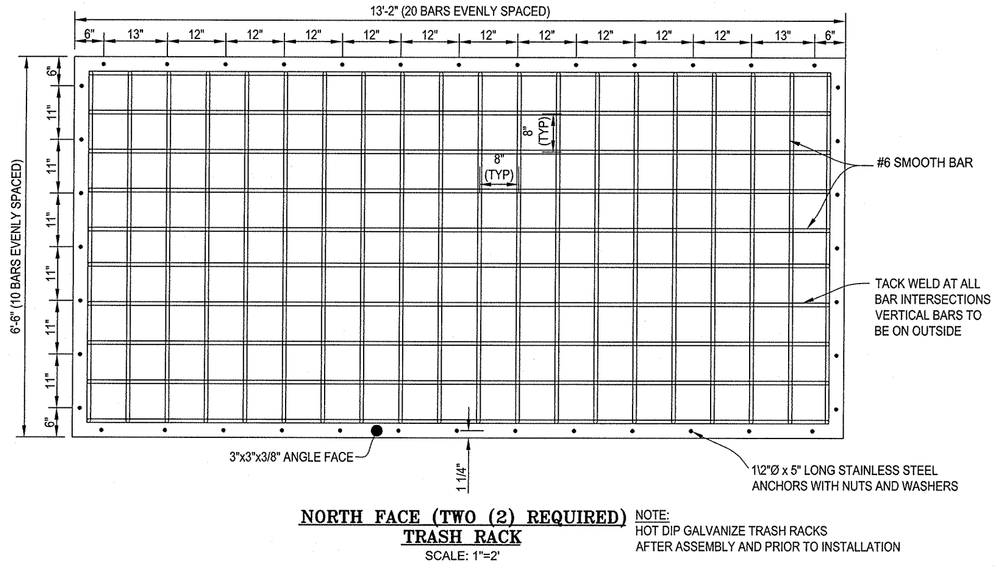

NORTH FACE (TWO (2) REQUIRED) TRASH RACK
SCALE: 1"=2'

NOTE:
HOT DIP GALVANIZE TRASH RACKS AFTER ASSEMBLY AND PRIOR TO INSTALLATION

DETAIL G-2-2 CORRUGATED RISER BASE

STANDARD SYMBOL

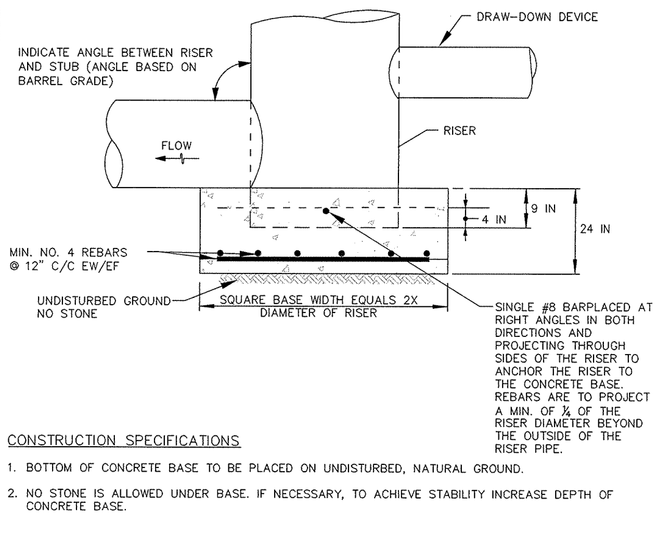

CONSTRUCTION SPECIFICATIONS

1. BOTTOM OF CONCRETE BASE TO BE PLACED ON UNDISTURBED, NATURAL GROUND.
2. NO STONE IS ALLOWED UNDER BASE. IF NECESSARY, TO ACHIEVE STABILITY INCREASE DEPTH OF CONCRETE BASE.

MARYLAND STANDARDS AND SPECIFICATIONS FOR SOIL EROSION AND SEDIMENT CONTROL

U.S. DEPARTMENT OF AGRICULTURE NATURAL RESOURCES CONSERVATION SERVICE	2011	MARYLAND DEPARTMENT OF ENVIRONMENT WATER MANAGEMENT ADMINISTRATION

DETAIL G-2-3 CONCENTRIC TRASH RACK AND ANTI-VORTEX DEVICE

STANDARD SYMBOL TR

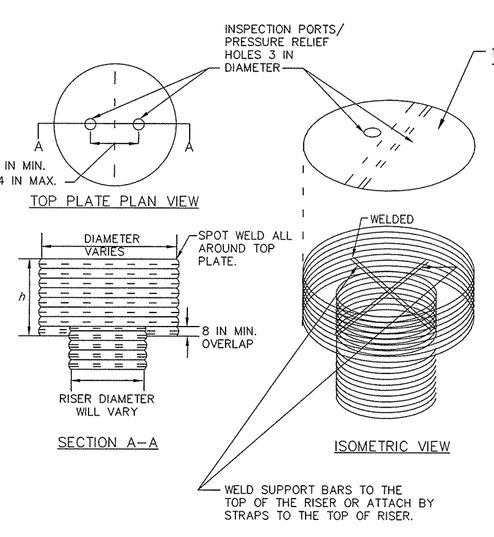

MARYLAND STANDARDS AND SPECIFICATIONS FOR SOIL EROSION AND SEDIMENT CONTROL

U.S. DEPARTMENT OF AGRICULTURE NATURAL RESOURCES CONSERVATION SERVICE	2011	MARYLAND DEPARTMENT OF ENVIRONMENT WATER MANAGEMENT ADMINISTRATION

1 OF 2

MISS UTILITY

Call "Miss Utility" at 1-800-257-7777, 48 hours prior to the start of work. The excavator must notify all public utility companies with underground facilities in the area of proposed excavation and have those facilities located by the utility companies prior to commencing excavation. The excavator is responsible for compliance with requirements of Chapter 36A of the Montgomery County Code.

GENERAL NOTES:

1. THIS PLAN SHALL ONLY BE USED FOR THE CONSTRUCTION OF STORMWATER MANAGEMENT AND ASSOCIATED STORMWATER MANAGEMENT IMPROVEMENTS AS SHOWN. THIS PLAN SHALL NOT BE USED FOR ANY OTHER CONSTRUCTION PURPOSE. THIS PLAN SHALL NOT BE USED FOR GRADING OF THE SITE OTHER THAN AREAS WITHIN THE SWM EASEMENT.

TILE DRAIN CROSS SECTION
SCALE: 1"=1'

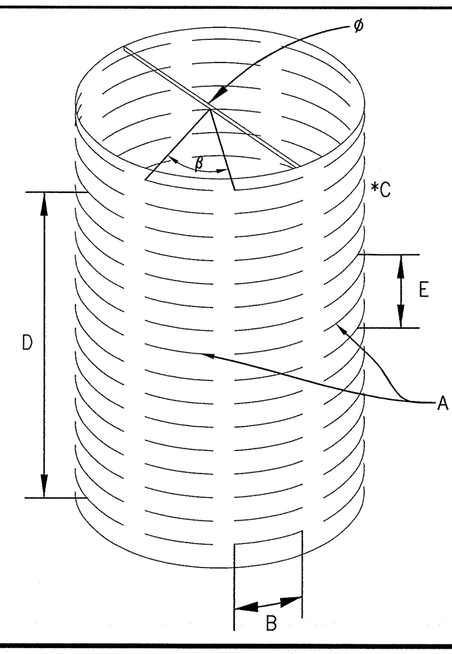

SLOT SCHEDULE		
DIMENSION	VALUE	UNITS
A*	4	EA
B	1.9	IN
C	1/8	IN
D	4	EA
E	3	IN
ø	6	IN
β	90	DEGREES

6" SLOTTED PVC DETAIL
(SCALE: 1"=1')

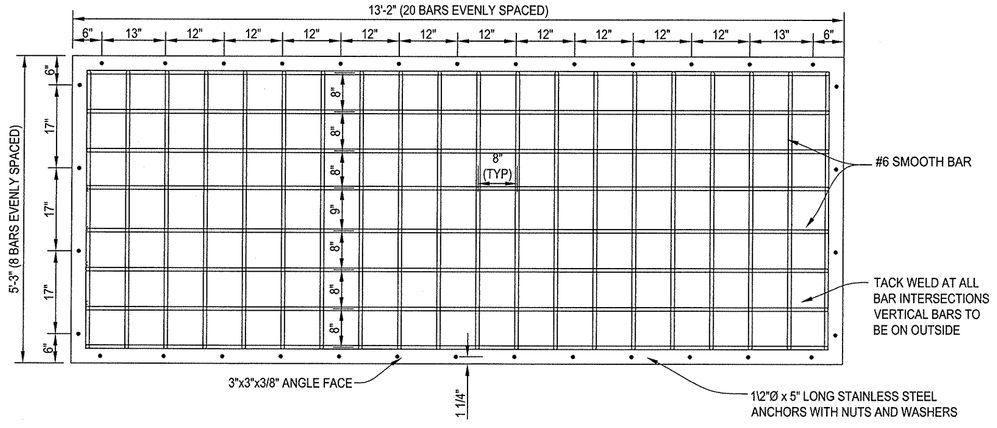

SOUTH FACE (TWO (2) REQUIRED) TRASH RACK
SCALE: 1"=2'

NOTE:
HOT DIP GALVANIZE TRASH RACKS AFTER ASSEMBLY AND PRIOR TO INSTALLATION

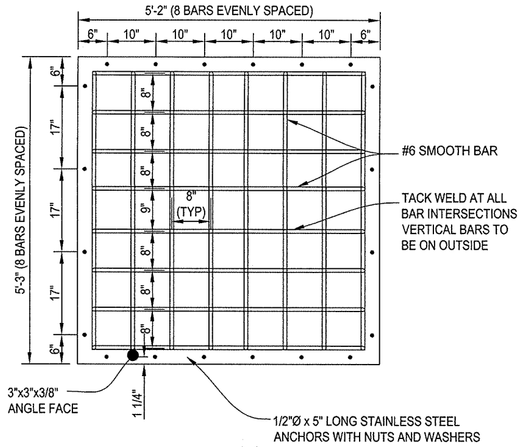

EAST / WEST FACE (TWO (2) REQUIRED) TRASH RACK
SCALE: 1"=2'

NOTE:
HOT DIP GALVANIZE TRASH RACKS AFTER ASSEMBLY AND PRIOR TO INSTALLATION

GRAPHIC SCALE
2 0 1 2 4
SCALE: 1" = 2'

STATE OF MARYLAND
JEFFREY BRIAN CARLSON
PROFESSIONAL ENGINEER
32457
7/17/2014

PROFESSIONAL CERTIFICATION
I HEREBY CERTIFY THAT THESE DOCUMENTS WERE PREPARED OR APPROVED BY ME, AND THAT I AM A DULY LICENSED PROFESSIONAL ENGINEER UNDER THE LAWS OF THE STATE OF MARYLAND.
LICENSE # 32457
EXPIRATION DATE: 06/20/2016

STORMWATER MANAGEMENT NOTES AND DETAILS

REGIONAL STORMWATER MANAGEMENT POND REPAIR AND RETROFIT (2014)

CHADSWOOD

GERMANTOWN (9th) ELECTION DISTRICT
MONTGOMERY COUNTY, MARYLAND

CPJ Associates
Charles P. Johnson & Associates, Inc.
Civil and Environmental Engineers • Planners • Landscape Architects • Surveyors
1751 Elton Rd., Ste. 300 Silver Spring, MD 20903 301-434-7000 Fax: 301-434-9394
www.cpja.com • Silver Spring, MD • Gaithersburg, MD • College Park, MD • Frederick, MD • Fairfax, VA

CLIENT: MONTGOMERY COUNTY
DEPARTMENT OF ENVIRONMENTAL PROTECTION
255 ROCKVILLE PIKE SUITE 120
ROCKVILLE, MARYLAND 20850
CONTACT: GENE GOFENKO, P.E.
PHONE:(240) 777-7723

PRELIMINARY PLAN NO.	N/A
SITE PLAN NO:	N/A
DESIGN	JBB
DRAFT	ADG
DATE	JULY, 2014
SCALE	AS-SHOWN
SHEET	14 OF 21
	SWM-7 SWM-8
FILE NO :	43-274-24.1

COPYRIGHT © LATEST DATE HEREON CHARLES P. JOHNSON & ASSOCIATES, INC. ALL RIGHTS RESERVED, UNAUTHORIZED USE OR REPRODUCTION IS PROHIBITED.

CONSTRUCTION NOTES:

FILTER DIAPHRAGM INSTALLATION NOTES

1) ALL MATERIALS FOR FILTER DIAPHRAGM INSTALLATION MUST BE SUBMITTED TO AND APPROVED BY THE ENGINEER-IN-CHARGE AND THE OWNER'S PROJECT MANAGER PRIOR TO DELIVERY TO SITE. SAMPLES OF SAND AND STONE MATERIAL TO BE USED IN THE FILTER DIAPHRAGM SHALL BE TESTED BY THE GEOTECHNICAL ENGINEER OF RECORD TO ENSURE COMPLIANCE WITH CORRECT GRADATIONS OF THE SPECIFIED MATERIALS.

2) MATERIALS TO BE USED ON THIS PROJECT CONSIST OF THE FOLLOWING:
   - i) ASTM C-33 SAND – THE MINIMUM DRY DENSITY OF THE COMPACTED SAND SHALL BE EQUAL TO 70 PERCENT OF THE DRY DENSITY OBTAINED BY COMPACTING A SINGLE SPECIMEN OF SAND USING THE ENERGY AND METHODS DESCRIBED IN ASTM D698A. THE TEST CONSISTS OF A ONE POINT TEST PERFORMED ON SAND THAT HAS BEEN AIR DRIED THOROUGHLY PRIOR TO COMPACTION. THE SAND SHALL HAVE NO MORE THAN 3% MATERIAL PASSING A #200 SIEVE AS STOCKPILED ON-SITE AND NO MORE THAN 5% MATERIAL PASSING A #200 SIEVE AS INSTALLED. THE GEOTECHNICAL ENGINEER OF RECORD SHALL CONFIRM THIS REQUIREMENT.
   - ii) STONE AGGREGATE SHALL BE DOUBLE-WASHED WITH A GRADATION MEETING AASHTO M43 SIZE #7.
   - iii) UNDER DRAIN PIPE AND FITTINGS SHALL BE 4" DIAMETER POLYVINYL CHLORIDE (P.V.C.) MEETING SCHEDULE 80. SLOTTED PIPE, WHERE SHOWN, SHALL CONSIST OF 1/8" WIDE BY 1.9 INCHES LONG SLOTS ORIENTED FOUR (4) SLOTS PER LF. AND FOUR ROWS SPACED EQUALLY AROUND THE CIRCUMFERENCE OF THE PIPE. SLOTS MUST BE MACHINED PRIOR TO DELIVERY TO THE SITE.

3) ALL FILTER DIAPHRAGM INSTALLATION WORK IS TO BE DONE UNDER SUPERVISION OF A PROFESSIONAL GEOTECHNICAL ENGINEER.

4) FILTER DIAPHRAGM MATERIAL IS TO BE PLACED IN A MAXIMUM OF 8" THICK LIFTS COMPACTING IN BETWEEN EACH LIFT.

5) COMPACTION OF EACH LIFT OF SAND SHALL BE ACCOMPLISHED VIA THE FOLLOWING PROCESS:
   - i) PLACE LIFT THE FULL LENGTH OF THE FILTER DIAPHRAGM PRIOR TO COMPACTION.
   - ii) FLOOD THE LIFT WITH CLEAN POTABLE WATER IMMEDIATELY PRIOR TO COMPACTION FROM A SOURCE APPROVED BY THE ENGINEER-IN-CHARGE AND THE OWNER'S PROJECT MANAGER.
   - iii) MAKE A MINIMUM OF TWO (2) PASSES WITH A VIBRATORY PLATE COMPACTOR WEIGHING AT LEAST 160 POUNDS WITH A MINIMUM CENTRIFUGAL WEIGHT OF 2,450 POUNDS AT A VIBRATING FREQUENCY OF NO LESS THAN 5,000 CYCLES PER MINUTE OR BY A VIBRATORY SMOOTH-WHEELED ROLLER WEIGHING AT LEAST 325 POUNDS WITH A CENTRIFUGAL WEIGHT OF 2,250 POUNDS AT A VIBRATING FREQUENCY OF NO LESS THAN 4,500 CYCLES PER MINUTE JUST AFTER THE WATER LEVEL HAS DROPPED BELOW THE SURFACE OF THE SAND.

6) FILTER DIAPHRAGM MATERIAL SHALL BE PLACED TO AVOID SEGREGATION OF PARTICLE SIZES AND TO ENSURE THE CONTINUITY AND INTEGRITY OF ALL ZONES. NO FOREIGN MATERIAL SHALL BE ALLOWED TO INTERMIX WITH OR OTHERWISE CONTAMINATE THE FILTER DIAPHRAGM MATERIALS. THE CONTRACTOR SHALL COMPLETELY REMOVE ANY FILTER DIAPHRAGM MATERIAL FOUND TO BE CONTAMINATED WITH FOREIGN MATERIALS PRIOR TO INSTALLING ADDITIONAL DIAPHRAGM MATERIAL.

7. TRAFFIC SHALL NOT BE PERMITTED TO CROSSOVER FILTER ZONES AT RANDOM. EQUIPMENT CROSSOVERS SHALL BE MAINTAINED, AND THE NUMBER AND LOCATION OF SUCH CROSSOVERS SHALL BE ESTABLISHED AND APPROVED PRIOR TO BEGINNING THE FILTER DIAPHRAGM PLACEMENT. EACH CROSS OVER SHALL BE CLEARED OF CONTAMINATING MATERIAL AND SHALL BE INSPECTED AND APPROVED BY THE PROFESSIONAL GEOTECHNICAL ENGINEER SUPERVISING THE INSTALLATION BEFORE PLACEMENT OF ADDITIONAL FILTER DIAPHRAGM MATERIAL.

8) ANY DAMAGE TO THE FOUNDATION SURFACE OR THE TRENCH SIDES OR BOTTOM OCCURRING DURING PLACEMENT OF FILTER DIAPHRAGM MATERIAL SHALL BE REPAIRED BEFORE FILTER DIAPHRAGM PLACEMENT IS CONTINUED.

9) THE UPPER SURFACE OF THE FILTER DIAPHRAGM SHOULD BE CONSTRUCTED CONCURRENTLY WITH ADJACENT ZONES OF EARTH FILL AND SHALL BE MAINTAINED AT A MINIMUM ONE LIFT ABOVE THE UPPER SURFACE OF THE ADJACENT EARTH FILL.

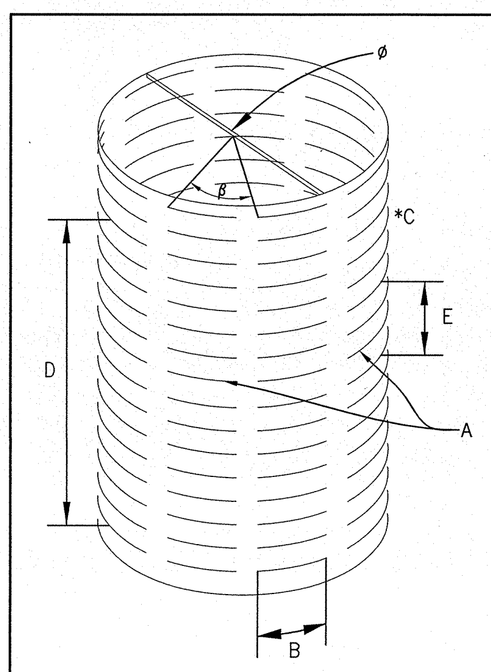

SLOT SCHEDULE		
DIMENSION	VALUE	UNITS
A	4	EA
B	1.9	IN
C	1/8	IN
D	4	EA
E	3	IN
Ø	4	IN
β	90	DEGREES

4" SLOTTED PVC DETAIL
(SCALE: 1"=1')

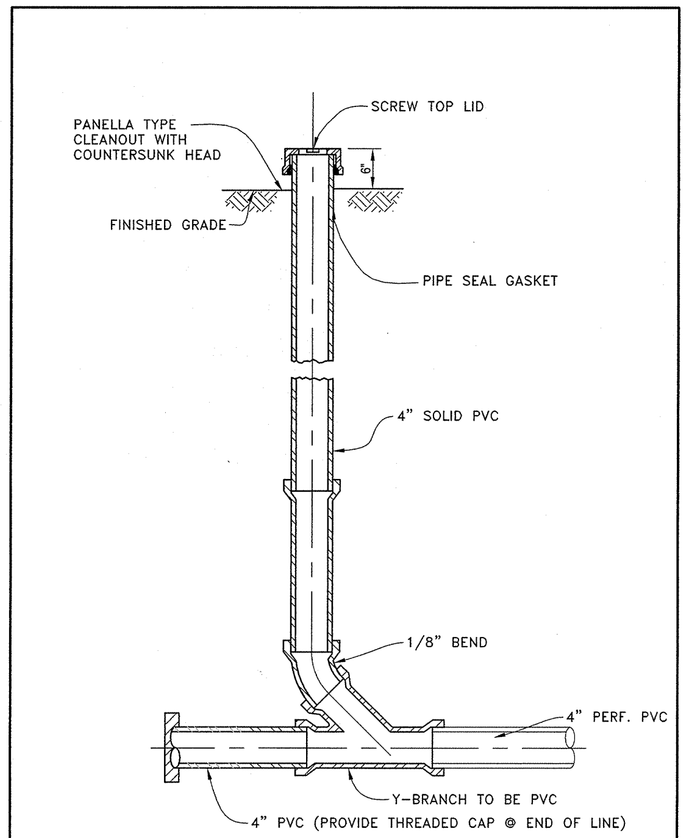

ELEVATION

CLEANOUT/OBSERVATION WELL DETAIL
(NON-TRAFFIC AREA)
NOT TO SCALE

.1 FOR AN UNDERGROUND OBSERVATION WELL/CLEANOUT MOUNTED APPROXIMATLY FLUSH WITH FINISHED GRADE, PROVIDE A TUBE MADE OF NON-CORROSIVE MATERIAL, SCHEDULE 80 PVC, OR EQUAL, AT LEAST THREE FEET LONG WITH AN INSIDE DIAMETER OF AT LEAST FOUR INCHES.

2. THE TUBE SHALL HAVE A FACTORY-ATTACHED CAST IRON OR HIGH-IMPACT PLASTIC COLLAR WITH RIBS TO PREVENT ROTATION WHEN REMOVING SCREW-TOP LID. THE SCREW-TOP LID SHALL BE CAST IRON OR HIGH-IMPACT PLASTIC THAT WILL WITHSTAND ULTRA-VIOLET RAYS.

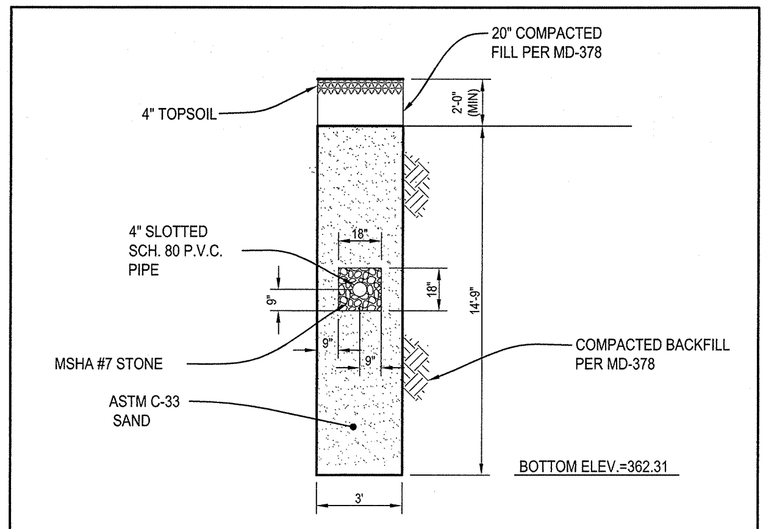

SAND FILTER DIAPHRAGM SECTION H-H
(SCALE: 1" = 5')

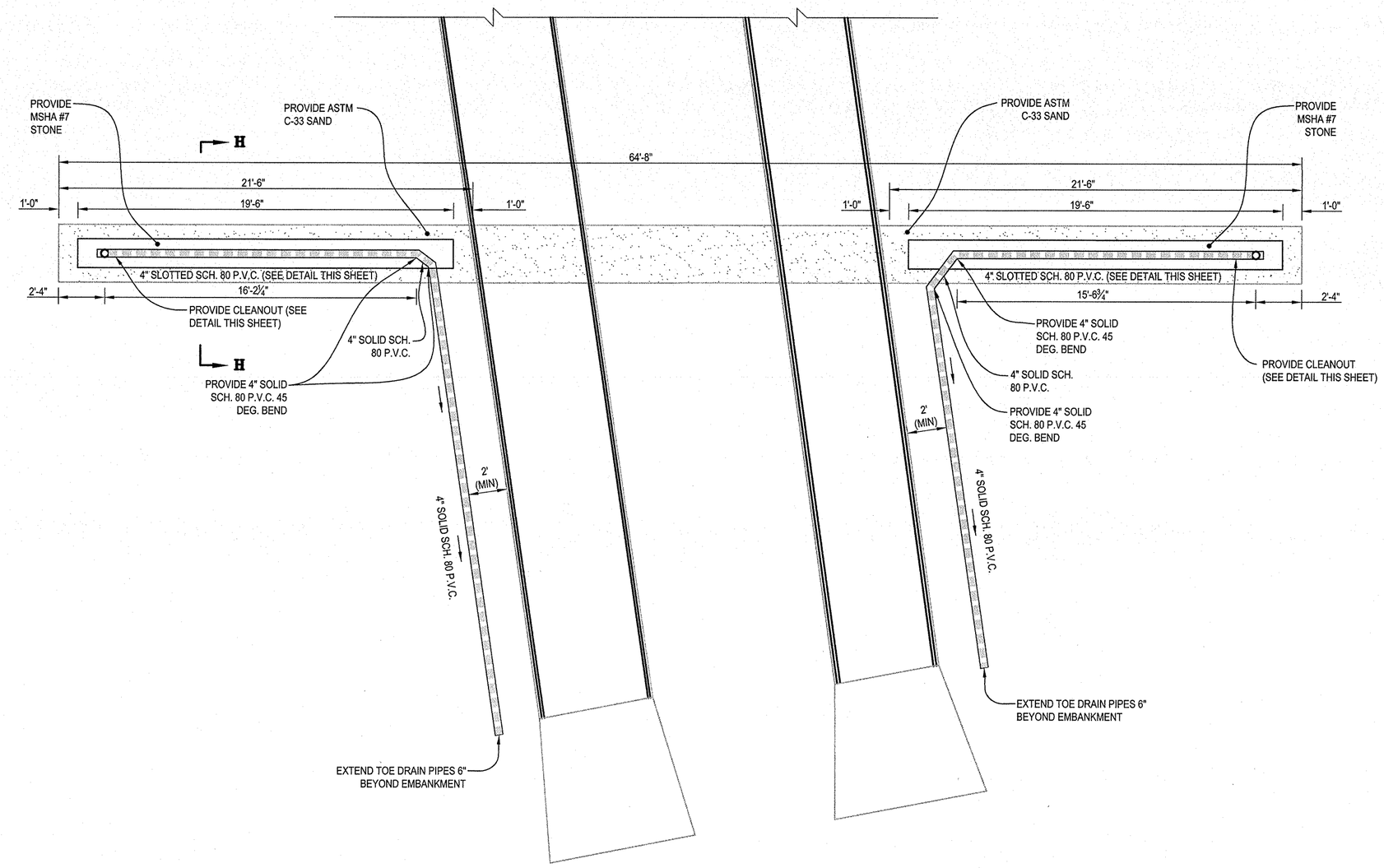

SAND FILTER DIAPHRAGM PLAN VIEW
(SCALE: 1" = 5')

GRAPHIC SCALE
5 0 2.5 5 10
SCALE: 1" = 5'

MISS UTILITY

Call "Miss Utility" at 1-800-257-7777, 48 hours prior to the start of work. The excavator must notify all public utility companies with underground facilities in the area of proposed excavation and have those facilities located by the utility companies prior to commencing excavation. The excavator is responsible for compliance with requirements of Chapter 36A of the Montgomery County Code.

GENERAL NOTES:
1. THIS PLAN SHALL ONLY BE USED FOR THE CONSTRUCTION OF STORMWATER MANAGEMENT AND ASSOCIATED STORMWATER MANAGEMENT IMPROVEMENTS AS SHOWN. THIS PLAN SHALL NOT BE USED FOR ANY OTHER CONSTRUCTION PURPOSE. THIS PLAN SHALL NOT BE USED FOR GRADING OF THE SITE OTHER THAN AREAS WITHIN THE SWM EASEMENT.
2. THE EXISTING UTILITIES SHOWN HEREON HAVE BEEN LOCATED USING INFORMATION AVAILABLE AT THE TIME THIS PLAN WAS PREPARED. PRIOR TO DIGGING, THE CONTRACTOR SHALL LOCATE ALL EXISTING UTILITIES VIA TEST PIT WITHIN THE LIMITS OF CONSTRUCTION SHOWN ON THIS PLAN AND CONFIRM THAT NO CONFLICTS EXIST. ANY CONFLICTS MUST BE BROUGHT TO THE ATTENTION OF CPJ AND THE OWNER PRIOR TO STARTING CONSTRUCTION.

STATE OF MARYLAND · JEFFREY BRIAN ELLEN · 32451 · PROFESSIONAL ENGINEER · 7/8/2014

PROFESSIONAL VERIFICATION
I HEREBY CERTIFY THAT THESE DOCUMENTS WERE PREPARED OR APPROVED BY ME, AND THAT I AM A DULY LICENSED PROFESSIONAL ENGINEER UNDER THE LAWS OF THE STATE OF MARYLAND.
LICENSE #: 32451
EXPIRATION DATE: 06/09/2016

SAND FILTER DIAPHRAGM DETAILS

REGIONAL STORMWATER MANAGEMENT
POND REPAIR AND RETROFIT (2014)

CHADSWOOD

GERMANTOWN (9th) ELECTION DISTRICT
MONTGOMERY COUNTY, MARYLAND

CPJ Associates — Charles P. Johnson & Associates, Inc.
Civil and Environmental Engineers • Planners • Landscape Architects • Surveyors
1751 Elton Rd., Ste. 300 Silver Spring, MD 20903 301-434-7000 Fax: 301-434-9394
www.cpja.com • Silver Spring, MD • Gaithersburg, MD • College Park, MD • Frederick, MD • Fairfax, VA

CLIENT: MONTGOMERY COUNTY
DEPARTMENT OF ENVIRONMENTAL PROTECTION
255 ROCKVILLE PIKE SUITE 120
ROCKVILLE, MARYLAND 20850
CONTACT: GENE GOPENKO, P.E.
PHONE:(240) 777-7723

PRELIMINARY PLAN NO.: N/A
SITE PLAN NO.: N/A
DESIGN: JBB
DRAFT: ADG
DATE: JULY, 2014
SCALE: AS-SHOWN
SHEET: 15 OF 21
SWM-8 SWM-8
FILE NO: 43-274-24.1

COPYRIGHT © LATEST DATE HEREON CHARLES P. JOHNSON & ASSOCIATES, INC. ALL RIGHTS RESERVED, UNAUTHORIZED USE OR REPRODUCTION IS PROHIBITED.

Attached Xrefs: _TB22x34 — PUBLIC/TB22x34/06-R-T002/06-V-T001/06-R-T001

Last Saved 7/10/2014 Last Plotted 7/10/2014 2:09 PM Sheet N:\43274\DWG\24-01

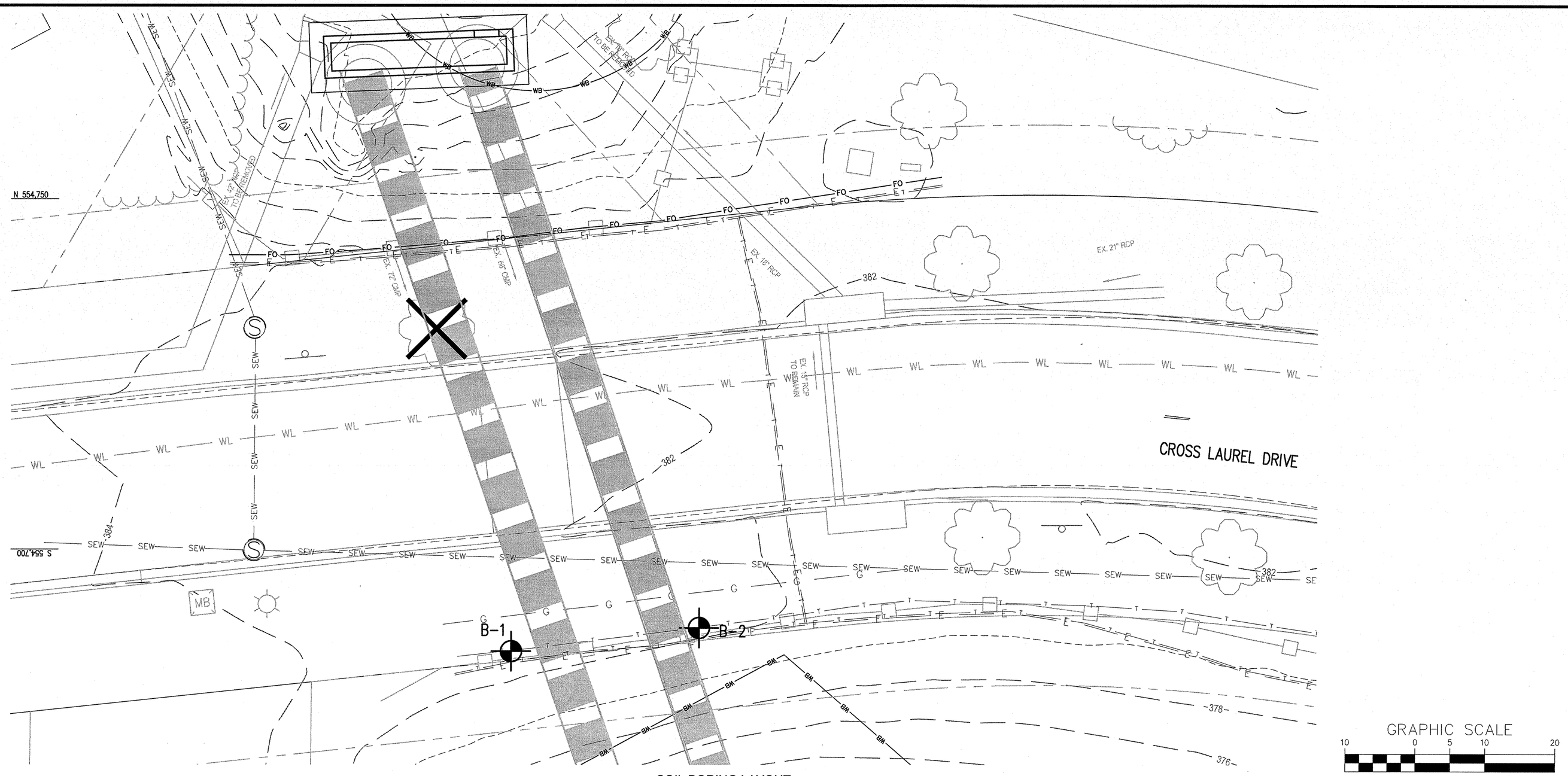

SOIL BORING LAYOUT

GRAPHIC SCALE
10 0 5 10 20
SCALE: 1" = 10'

KIM ENGINEERING
RECORD OF SOIL EXPLORATION

Project Name: Chadsworth SWM Pond — Ref. #: B - 1 (Page 1 of 2)
Location: Germantown, Maryland — Job #: G13081BC

Datum: MSL — Hammer Wt.: 140 Lbs. — Hole Diameter: 2.25" I.D. — Foreman: P Stephens
Surf. Elev.: 384 +/- — Hammer Drop: 30 Inches — Rock Core Dia.: N.A. — Inspector:
Date Started: 08 16 2013 — Pipe Size: 2 Inches OD — Boring Method: HSA — Date Complete: 08 16 2013

SAMPLER

ELEV.	SOIL DESCRIPTION Color,Moisture,Density,Size,Proportion	STRA. DEPTH	DEPTH SCALE	SAMPLE CON	SAMPLE BLOWS 6"	SAMPLE NO.	REC. In.	BORING & SAMPLING NOTES
	SURFACE		0.0					Asphalt to 5.5" Crushed Stone to 10"
	Brown and light brown moist to wet micaceous loose to very loose Silty medium to fine SAND with none to trace rock fragments (SM - FILL)			D	6 6 5	1	9	
			5	D	3 3 3	2	10	
				D	2 3 2	3	16	
			10	D	4 4 3	4	17	
				D	3 4 4	5	18	
			15	D	3 2 4	6	18	
				D	1 1 1	7	9	
			20	D	1 1 1	8	18	

SAMPLER TYPE: DRIVEN SPLIT SPOON UNLES OTHERWISE NOTED. PT-PRESSED SHELBY TUBE CA-CONTINUOUS FLIGHT AU RC-ROCK CORE
SAMPLE CONDITIONS: D-DISINTEGRATED I-INTACT U-UNDISTURBED L-LOST
GROUND WATER DEPTH: AT Completion _____ FT. AFTER _____ FT.
BORING METHOD: HSA-HOLLOW STEM AUGERS CFA-CONT. FLIGHT AUGERS DC-DRIVING CASING MD-MUD DRILLING

STANDARD PENETRATION TEST-DRIVING 2" OD SAMPLER 1' WITH 140# HAMMER FALLING 30":COUNT MADE AT 6" INTERVALS

KIM ENGINEERING
RECORD OF SOIL EXPLORATION

Project Name: Chadsworth SWM Pond — Ref. #: B - 1 (Page 2 of 2)
Location: Germantown, Maryland — Job #: G13081BC

Datum: MSL — Hammer Wt.: 140 Lbs. — Hole Diameter: 2.25" I.D. — Foreman: P Stephens
Surf. Elev.: — Hammer Drop: 30 Inches — Rock Core Dia.: N.A. — Inspector:
Date Started: 08 16 2013 — Pipe Size: 2 Inches OD — Boring Method: HSA — Date Complete: 08 16 2013

SAMPLER

ELEV.	SOIL DESCRIPTION Color,Moisture,Density,Size,Proportion	STRA. DEPTH	DEPTH SCALE	SAMPLE CON	SAMPLE BLOWS 6"	SAMPLE NO.	REC. In.	BORING & SAMPLING NOTES
	SURFACE		0.0					
	As per Page 1 of 2 (SM - FILL).							
			21.0					
	Brown gray wet micaceous very dense coarse to fine SAND with some silt and little rock fragments (SM-Decomposed Rock)			D	21 35 48	9	16	
	Bottom of test boring @ 25 feet.		25	D	13 22 24	10	10	
			30					
			35					
			40					Groundwater apparent during drilling at 22 feet.

SAMPLER TYPE: DRIVEN SPLIT SPOON UNLES OTHERWISE NOTED. PT-PRESSED SHELBY TUBE CA-CONTINUOUS FLIGHT AU RC-ROCK CORE
SAMPLE CONDITIONS: D-DISINTEGRATED I-INTACT U-UNDISTURBED L-LOST
GROUND WATER DEPTH: AT Completion Dry at @ 10. FT. AFTER _____ FT.
BORING METHOD: HSA-HOLLOW STEM AUGERS CFA-CONT. FLIGHT AUGERS DC-DRIVING CASING MD-MUD DRILLING

STANDARD PENETRATION TEST-DRIVING 2" OD SAMPLER 1' WITH 140# HAMMER FALLING 30":COUNT MADE AT 6" INTERVALS

KIM ENGINEERING
RECORD OF SOIL EXPLORATION

Project Name: Chadsworth SWM Pond — Ref. #: B - 2 (Page 1 of 2)
Location: Germantown, Maryland — Job #: G13081BC

Datum: MSL — Hammer Wt.: 140 Lbs. — Hole Diameter: 2.25" I.D. — Foreman: P Stephens
Surf. Elev.: 384 +/- — Hammer Drop: 30 Inches — Rock Core Dia.: N.A. — Inspector:
Date Started: 08 16 2013 — Pipe Size: 2 Inches OD — Boring Method: HSA — Date Complete: 08 16 2013

SAMPLER

ELEV.	SOIL DESCRIPTION Color,Moisture,Density,Size,Proportion	STRA. DEPTH	DEPTH SCALE	SAMPLE CON	SAMPLE BLOWS 6"	SAMPLE NO.	REC. In.	BORING & SAMPLING NOTES
	SURFACE		0.0					Asphalt to 5.5" Crushed Stone to 10"
	Brown dry micaceous loose very fine Sandy SILT (ML-FILL)			D	3 4 4	1	15	
			5	D	3 3 3	2	18	
	Brown dry to moist micaceous loose to very loose medium to fine SAND with trace coarse sand and trace rock fragments (SM - FILL)	5.5		D	3 2 3	3	18	
			10	D	2 3 5	4	18	
				D	3 3 4	5	18	
			15	D	3 4 5	6	18	
				D	1 1 1	7	9	
			20	D	1 1 1	8	18	

SAMPLER TYPE: DRIVEN SPLIT SPOON UNLES OTHERWISE NOTED. PT-PRESSED SHELBY TUBE CA-CONTINUOUS FLIGHT AU RC-ROCK CORE
SAMPLE CONDITIONS: D-DISINTEGRATED I-INTACT U-UNDISTURBED L-LOST
GROUND WATER DEPTH: AT Completion _____ FT. AFTER _____ FT.
BORING METHOD: HSA-HOLLOW STEM AUGERS CFA-CONT. FLIGHT AUGERS DC-DRIVING CASING MD-MUD DRILLING

STANDARD PENETRATION TEST-DRIVING 2" OD SAMPLER 1' WITH 140# HAMMER FALLING 30":COUNT MADE AT 6" INTERVALS

KIM ENGINEERING
RECORD OF SOIL EXPLORATION

Project Name: Chadsworth SWM Pond — Ref. #: B - 2 (Page 2 of 2)
Location: Germantown, Maryland — Job #: G13081BC

Datum: MSL — Hammer Wt.: 140 Lbs. — Hole Diameter: 2.25" I.D. — Foreman: P Stephens
Surf. Elev.: — Hammer Drop: 30 Inches — Rock Core Dia.: N.A. — Inspector:
Date Started: 08 16 2013 — Pipe Size: 2 Inches OD — Boring Method: HSA — Date Complete: 08 16 2013

SAMPLER

ELEV.	SOIL DESCRIPTION Color,Moisture,Density,Size,Proportion	STRA. DEPTH	DEPTH SCALE	SAMPLE CON	SAMPLE BLOWS 6"	SAMPLE NO.	REC. In.	BORING & SAMPLING NOTES
	SURFACE		0.0					
	As per Page 1 of 2 with trace roots and topsoil and wet at base. (SM - FILL)			D	1 1 1	9	18	
		23.0						
	Light brown moist micaceous medium dense Silty coarse to fine SAND with trace rock fragments (SM)		25	D	8 11 15	10	15	
	Bottom of test boring @ 25 feet.							
			30					
			35					
			40					Groundwater not apparent during drilling.

SAMPLER TYPE: DRIVEN SPLIT SPOON UNLES OTHERWISE NOTED. PT-PRESSED SHELBY TUBE CA-CONTINUOUS FLIGHT AU RC-ROCK CORE
SAMPLE CONDITIONS: D-DISINTEGRATED I-INTACT U-UNDISTURBED L-LOST
GROUND WATER DEPTH: AT Completion Dry at @ 10. FT. AFTER _____ FT.
BORING METHOD: HSA-HOLLOW STEM AUGERS CFA-CONT. FLIGHT AUGERS DC-DRIVING CASING MD-MUD DRILLING

STANDARD PENETRATION TEST-DRIVING 2" OD SAMPLER 1' WITH 140# HAMMER FALLING 30":COUNT MADE AT 6" INTERVALS

MISS UTILITY

Call "Miss Utility" at 1-800-257-7777, 48 hours prior to the start of work. The excavator must notify all public utility companies with underground facilities in the area of proposed excavation and have those facilities located by the utility companies prior to commencing excavation. The excavator is responsible for compliance with requirements of Chapter 36A of the Montgomery County Code.

STATE OF MARYLAND — JEFFREY BRIAN RIEGER — 32457 — PROFESSIONAL ENGINEER — 7/8/2014

PROFESSIONAL CERTIFICATION
I HEREBY CERTIFY THAT THESE DOCUMENTS WERE PREPARED OR APPROVED BY ME, AND THAT I AM A DULY LICENSED PROFESSIONAL ENGINEER UNDER THE LAWS OF THE STATE OF MARYLAND.
LICENSE #: 32457
EXPIRATION DATE: 06/20/2016

SOIL BORING LOGS

REGIONAL STORMWATER MANAGEMENT POND REPAIR AND RETROFIT (2014)

CHADSWOOD

GERMANTOWN (9th) ELECTION DISTRICT
MONTGOMERY COUNTY, MARYLAND

CPJ Associates — Charles P. Johnson & Associates, Inc.
Civil and Environmental Engineers • Planners • Landscape Architects • Surveyors
1751 Elton Rd., Ste. 300 Silver Spring, MD 20903 301-434-7000 Fax: 301-434-9394
www.cpja.com • Silver Spring, MD • Gaithersburg, MD • College Park, MD • Frederick, MD • Fairfax, VA

CLIENT: MONTGOMERY COUNTY
DEPARTMENT OF ENVIRONMENTAL PROTECTION
255 ROCKVILLE PIKE SUITE 120
ROCKVILLE, MARYLAND 20850
CONTACT: GENE GOPENKO, P.E.
PHONE:(240) 777-7723

PRELIMINARY PLAN NO.: N/A	SITE PLAN NO.: N/A	
DESIGN: JBB	SHEET: 16	OF: 21
DRAFT: ADG	B-1	B-1
DATE: JULY, 2014	FILE NO: 43-274-24.1	
SCALE: 1"=10'		

COPYRIGHT © LATEST DATE HEREON CHARLES P. JOHNSON & ASSOCIATES, INC. ALL RIGHTS RESERVED, UNAUTHORIZED USE OR REPRODUCTION IS PROHIBITED.

Attached Xrefs: _TB22x34 — PUBLIC/TB22x34/06-R-T002/06-V-T001/06-R-T001

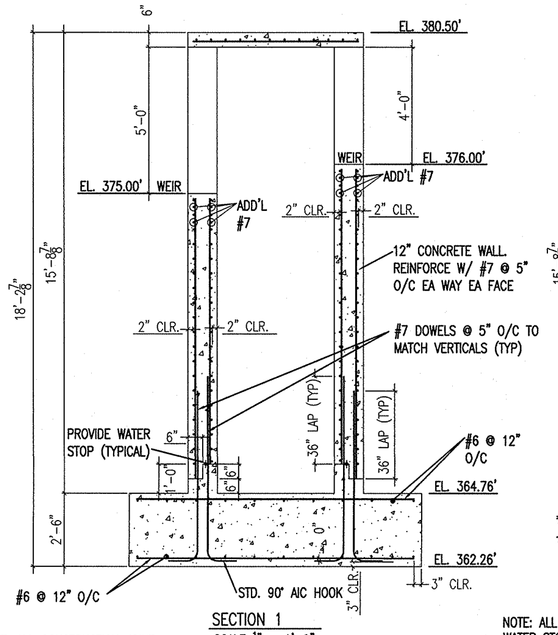

SECTION 1
SCALE 1" = 1'-0"

NOTE: ALL CONSTRUCTION JOINT WATER STOPS TO BE VINELEX RB 9-316 OR EQUAL APPROVED BY THE ENGINEER-IN-CHARGE

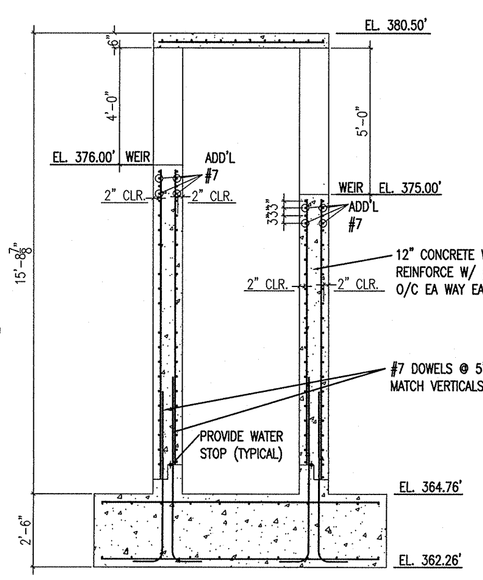

SECTION 2
SCALE 1" = 1'-0"

NOTE: ALL CONSTRUCTION JOINT WATER STOPS TO BE VINELEX RB 9-316 OR EQUAL APPROVED BY THE ENGINEER-IN-CHARGE

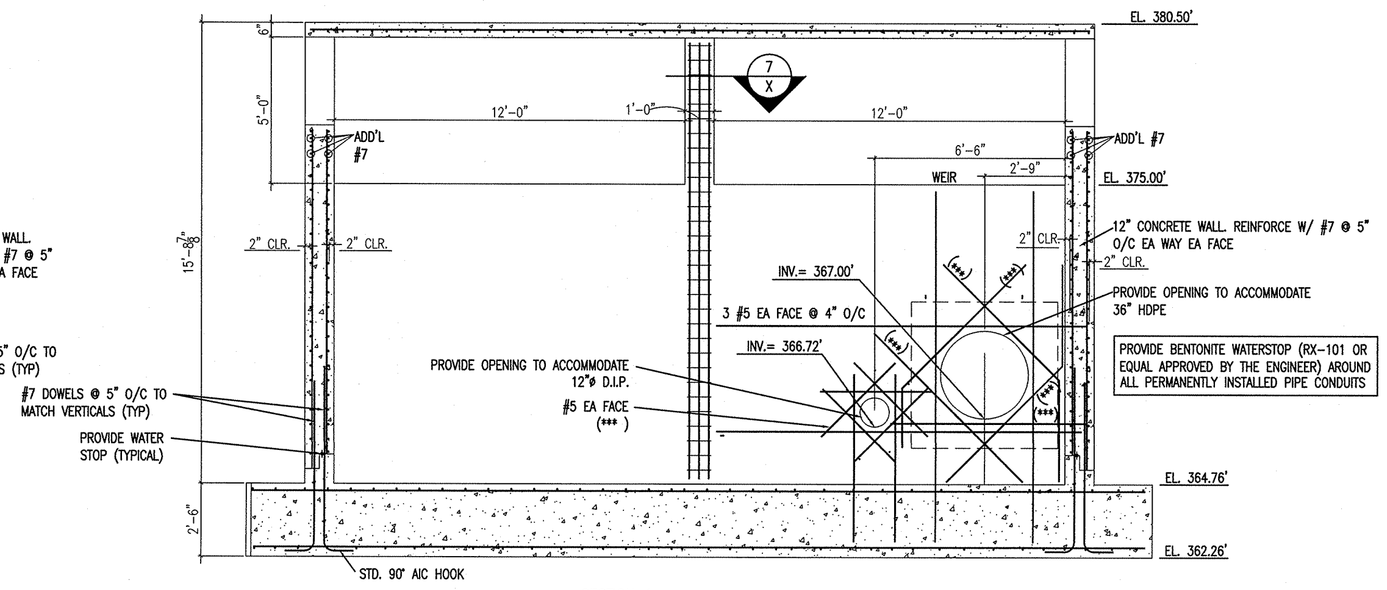

SECTION 4
SCALE 1" = 1'-0"

NOTE: ALL CONSTRUCTION JOINT WATER STOPS TO BE VINELEX RB 9-316 OR EQUAL APPROVED BY THE ENGINEER-IN-CHARGE

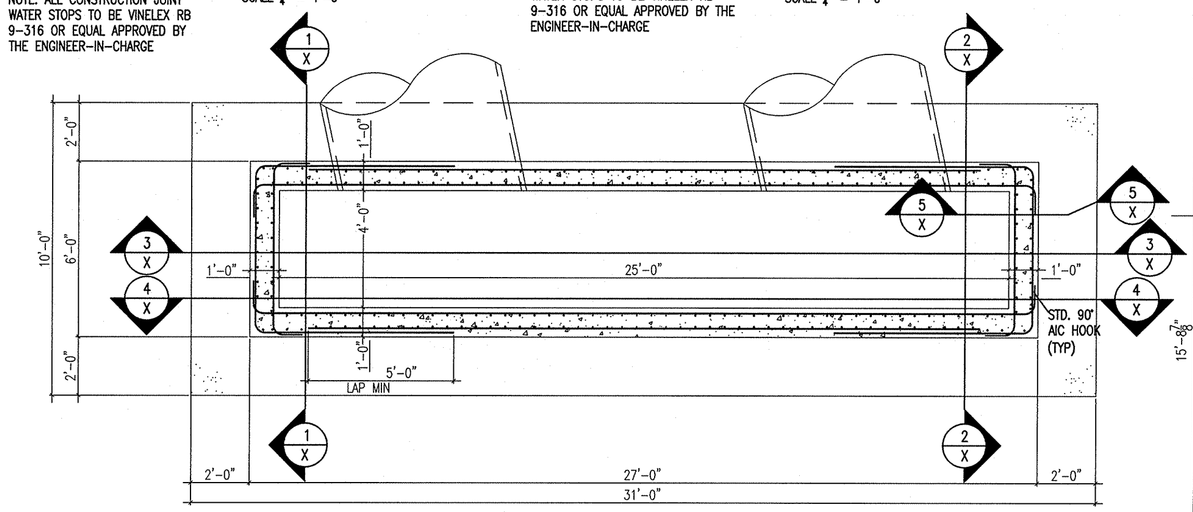

FOUNDATION FRAMING PLAN
SCALE 1" = 1'-0"

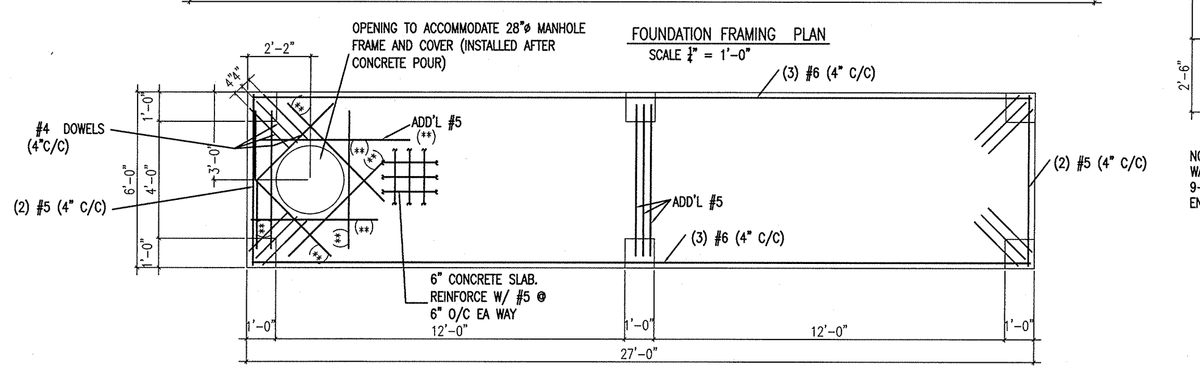

TOP SLAB FRAMING PLAN
SCALE 1" = 1'-0"

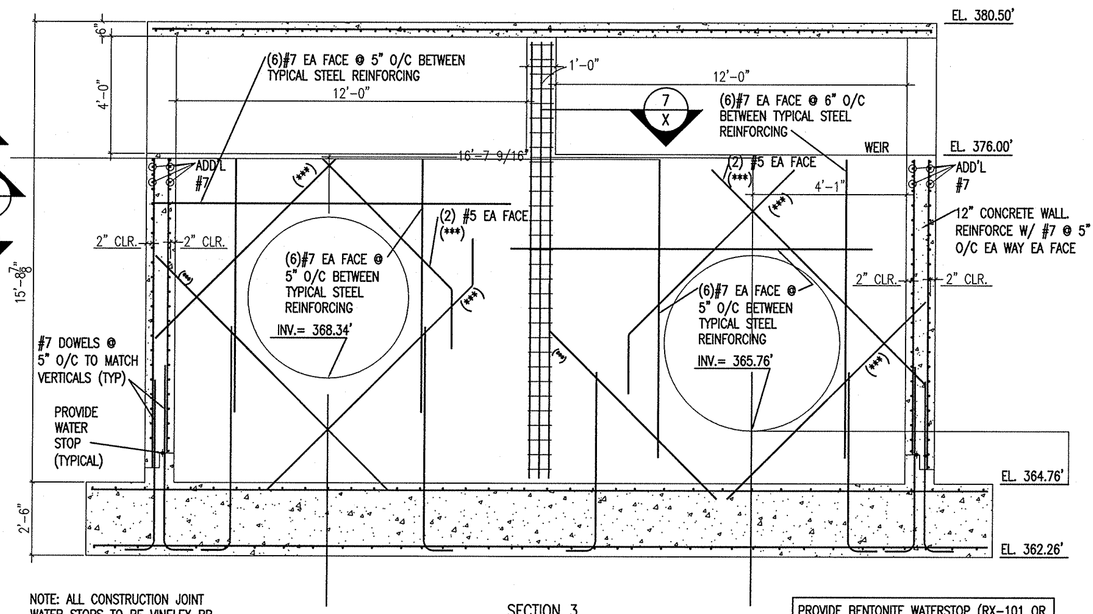

NOTE: ALL CONSTRUCTION JOINT WATER STOPS TO BE VINELEX RB 9-316 OR EQUAL APPROVED BY THE ENGINEER-IN-CHARGE

SECTION 3
SCALE 1" = 1'-0"

PROVIDE BENTONITE WATERSTOP (RX-101 OR EQUAL APPROVED BY THE ENGINEER) AROUND ALL PERMANENTLY INSTALLED PIPE CONDUITS

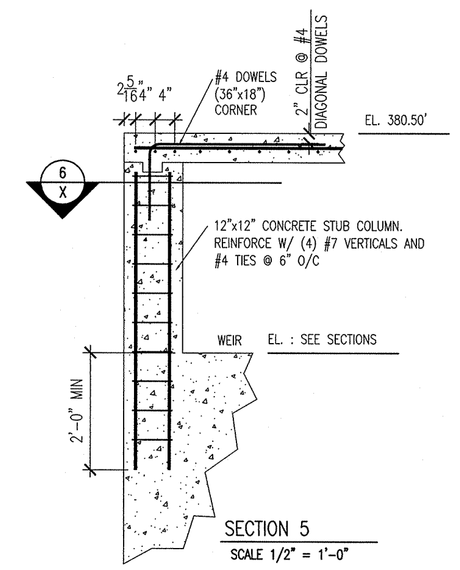

SECTION 5
SCALE 1/2" = 1'-0"

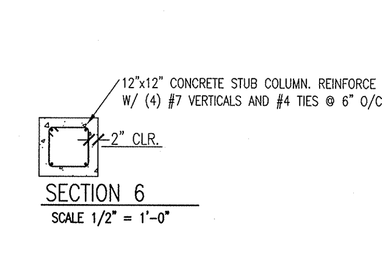

SECTION 6
SCALE 1/2" = 1'-0"

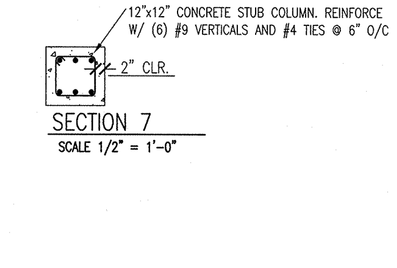

SECTION 7
SCALE 1/2" = 1'-0"

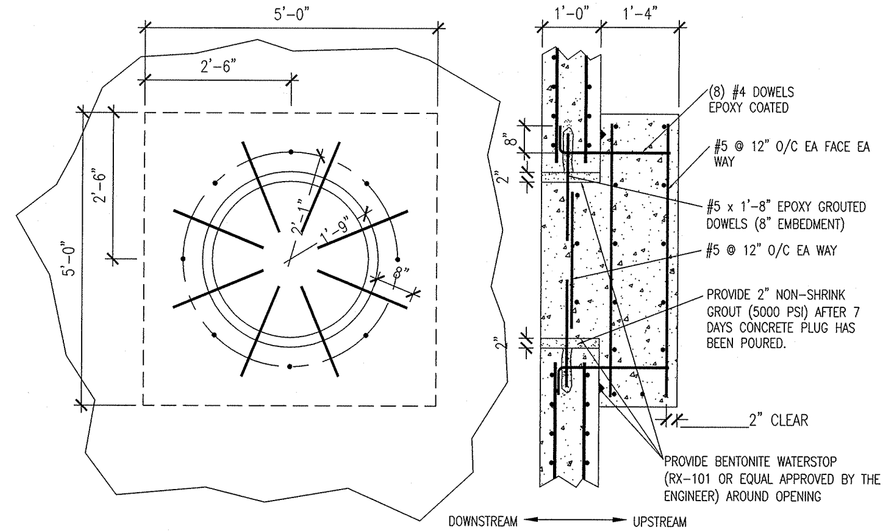

CONCRETE PLUG DETAIL

DETAIL A
SCALE 1/2" = 1'-0"

STRUCTURAL NOTES

1. BUILDING CODES

   A. ALL CONSTRUCTION SHALL CONFORM WITH THE 2012 INTERNATIONAL BUILDING CODE AND ALL SUBSEQUENT SUPPLEMENTS.

   B. IN ADDITION, ALL CONSTRUCTION SHALL CONFORM WITH THE GOVERNING LOCAL BUILDING CODE.

2. MISCELLANEOUS

   A. THE CONTRACTOR SHALL REVIEW CIVIL DRAWINGS PREPARED BY CPJ ASSOCIATES, DATED XXX FOR LOCATION AND DIMENSION OF CHASES, INSERTS, OPENINGS, SLEEVES, DEPRESSIONS AND OTHER PROJECT REQUIREMENTS WHICH IMPACT THE STRUCTURAL COMPONENTS.

   B. THE CONTRACTOR SHALL CHECK AND VERIFY ALL DIMENSIONS SHOWN ON THE CONTRACT DRAWINGS BEFORE PROCEEDING WITH CONSTRUCTION. ALL DISCREPANCIES AND OMISSIONS SHALL BE BROUGHT TO THE ATTENTION OF THE ENGINEER.

   C. THE CONTRACTOR SHALL NOT SUBMIT REPRODUCTIONS OF THE STRUCTURAL CONTRACT DOCUMENTS AS SHOP DRAWINGS. CONTRACTOR SHALL SUBMIT REINFORCEMENT STEEL DRAWINGS TO ENGINEER FOR REVIEW AND APPROVAL PRIOR PROCURING OR FABRICATING STEEL.

   D. SCALES SHOWN ON THE STRUCTURAL CONTRACT DRAWINGS ARE FOR GENERAL INFORMATION ONLY. DIMENSIONAL INFORMATION SHALL NOT BE OBTAINED BY SCALING THE DRAWINGS

3. FOUNDATIONS

   A. ALL FOUNDATIONS HAVE BEEN DESIGNED FOR AN ASSUMED NET ALLOWABLE SOIL BEARING PRESSURE OF 2500 PSF. THE ALLOWABLE SOIL BEARING PRESSURE SHALL BE FIELD VERIFIED BY A REGISTERED GEOTECHNICAL ENGINEER AND APPROVED PRIOR TO PLACING FOUNDATIONS. SHOULD THE ACTUAL SOIL BEARING PRESSURE BE LESS THAN 2500 PSF, THE CONTRACTOR SHALL IMMEDIATELY NOTIFY THE ENGINEER.

   B. ALL EXCAVATION AND BACKFILLING OPERATIONS WITHIN THE STRUCTURE FOOTPRINT, INCLUDING ALL COMPACTION TESTS AND INSPECTIONS, SHALL BE DONE UNDER THE DIRECTION AND SUPERVISION OF A REGISTERED GEOTECHNICAL ENGINEER. CONTRACTOR SHALL BACKFILL AROUND PERIMETER OF THE RISER AT AN EVEN RATE SO AS NOT TO CAUSE AN OVERTURNING MOMENT.

   C. THE CONTRACTOR SHALL NOTIFY THE ENGINEER OF ALL FOUNDATION AND SOIL CONDITIONS WHICH DIFFER FROM THOSE ANTICIPATED OR INDICATED IN THE CONTRACT DOCUMENTS.

   D. ALL EXISTING SOIL CONTAINING GRAVEL, CONSTRUCTION OR DEMOLITION DEBRIS, ORGANIC SUBSTANCES, OR OTHER FOREIGN OBJECTS SHALL BE REMOVED FROM THE REGION WITHIN THE FOOTPRINT OF THE STRUCTURE.

4. CAST IN PLACE CONCRETE

   A. ALL CONCRETE CONSTRUCTION SHALL CONFORM TO THECODE REQUIREMENTS FOR ENVIRONMENTAL ENGINEERING CONCRETE STRUCTURES (ACI 350). LATEST LOCAL APPROVED.

   B. IN ADDITION TO THE ABOVE, ALL CONCRETE WORK SHALL CONFORM TO THE FOLLOWING:
      1. RECOMMENDED PRACTICE FOR HOT WEATHER CONCRETING (ACI 305).
      2. RECOMMENDED PRACTICE FOR COLD WEATHER CONCRETING (ACI 306).
      3. RECOMMENDED PRACTICE FOR CONCRETE FORMWORK (ACI 347).

   C. ALL CONCRETE, UNLESS NOTED OTHERWISE, SHALL BE STONE AGGREGATE CONCRETE HAVING A MINIMUM 28 DAY COMPRESSIVE STRENGTH OF 4500 PSI (SHA MIX #6). ALL CONCRETE EXPOSED TO WEATHER SHALL HAVE AN AIR ENTRAINMENT OF 5% ± 1%. NO ADMIXTURES CONTAINING CALCIUM CHLORIDE SHALL BE PERMITTED. MAXIMUM AGGREGATE SIZE SHALL BE 1", WATER/CEMENT RATIO SHALL BE 0.45, MAXIMUM SLUMP WHALL BE 5". ALL CONCRETE, EXCEPT FOOTINGS, SHALL CONTAIN A WATER REDUCING ADMIXTURE. PORTLAND CEMENT SHALL CONFORM TO ASTM C-33.

   D. ALL REINFORCING BARS SHALL BE NEW BILLET STEEL CONFORMING TO ASTM A 615 GRADE 60. ALL WELDED WIRE FABRIC (W.W.F.) SHALL CONFORM TO ASTM A 185. LAP ALL REINFORCING BARS A MINIMUM OF 48 BAR DIAMETERS AND ALL W.W.F. A MINIMUM OF TWO FULL GRIDS, UNLESS OTHERWISE INDICATED.

   E. ALL REINFORCING SHALL BE DETAILED, FABRICATED AND PLACED IN ACCORDANCE WITH THE CRSI "MANUAL OF STANDARD PRACTICE", ACI 315" DETAILS AND DETAILING OF CONCRETE REINFORCEMENT", ACI SP 66 "DETAILING MANUAL".

   F. ALL CONCRETE MIX DESIGNS, INCLUDING CEMENT CONTENT, WATER/CEMENT RATIO, FINE AND COARSE AGGREGATE CONTENT AND ALL ADMIXTURES, SHALL BE REVIEWED BY ENGINEER PRIOR TO PLACING FIRST CONCRETE.

   G. ALL CONCRETE SHALL BE SAMPLED AND TESTED BY THE TESTING AGENCY. THE CONTRACTOR SHALL NOTIFY THE TESTING AGENCY 48 HOURS PRIOR TO THE PLACING OF ANY CONCRETE.

   H. GROUND BLAST FURNACE SLAG CAN NOT BE USED TO REPLACE THE PORTLAND CEMENT IN A CONCRETE MIX, AND FLY ASH OR POZZOLAN CAN NOT BE USED TO REPLACE THE PORTLAND CEMENT IN A CONCRETE MIX.

   I. MINIMUM COVER FOR ALL REINFORCING SHALL BE AS FOLLOWS UNLESS OTHERWISE INDICATED:
      FOUNDATIONS 3 INCHES
      WALLS 2 INCHES

   J. CHAMFER ALL EXPOSED CORNERS EXCEPT FOR FOOTINGS WITH 3/4"x3/4" MILLED CHAMFER STRIPS.

5. RETAINING WALLS

   A. RETAINING WALLS HAVE BEEN DESIGNED WITH BACKFILL MATERIAL HAVING THE FOLLOWING CHARACTERISTICS:
      EARTH PRESSURE CALCULATED BASED EQUIVALENT FLUID PRESSURE OF 60H SOIL
      WEIGHT = 120 PCF
   IT SHALL BE THE CONTRACTORS RESPONSIBILITY TO ENSURE THE BACKFILL MATERIAL MEETS THESE CHARACTERISTICS.

   B. RETAINING WALLS HAVE BEEN DESIGNED FOR THE FOLLOWING MINIMUM FACTORS OF SAFETY:
      OVERTURNING 2.0 OR BETTER
      SLIDING 1.5 OR BETTER
      BOUYANCY 1.5 OR BETTER

   C. DO NOT BACKFILL UNTIL CONCRETE HAS REACHED ITS DESIGN STRENGTH AT 28 DAYS.

STRUCTURAL CERTIFICATION

I hereby certify that the structural design of this stormwater management facility is in accordance with applicable codes and that the plan for this has been designed for specified loading(s) as indicated hereon.

Design Engineer Signature — Date: 18 July 2014

JEFFREY BRIAN BLASS — Printed Name

32457 — Registration Number

ACI350 — Design Loading

STATE OF MARYLAND · JEFFREY BRIAN BLASS · 32457 · PROFESSIONAL ENGINEER

MISS UTILITY

Call "Miss Utility" at 1-800-257-7777, 48 hours prior to the start of work. The excavator must notify all public utility companies with underground facilities in the area of proposed excavation and have those facilities located by the utility companies prior to commencing excavation. The excavator is responsible for compliance with requirements of Chapter 36A of the Montgomery County Code.

RISER STRUCTURAL DESIGN

REGIONAL STORMWATER MANAGEMENT
POND REPAIR AND RETROFIT (2014)

CHADSWOOD

GERMANTOWN (9th) ELECTION DISTRICT
MONTGOMERY COUNTY, MARYLAND

CPJ Associates — Charles P. Johnson & Associates, Inc.
Civil and Environmental Engineers • Planners • Landscape Architects • Surveyors
1751 Elton Rd., Ste. 300 Silver Spring, MD 20903 301-434-7000 Fax: 301-434-9394
www.cpja.com • Silver Spring, MD • Gaithersburg, MD • College Park, MD • Frederick, MD • Fairfax, VA

CLIENT: MONTGOMERY COUNTY
DEPARTMENT OF ENVIRONMENTAL PROTECTION
255 ROCKVILLE PIKE SUITE 120
ROCKVILLE, MARYLAND 20850
CONTACT: GENE GOPENKO, P.E.
PHONE:(240) 777-7723

COPYRIGHT © LATEST DATE HEREON CHARLES P. JOHNSON & ASSOCIATES, INC. ALL RIGHTS RESERVED. UNAUTHORIZED USE OR REPRODUCTION IS PROHIBITED.

PRELIMINARY PLAN NO.	N/A
SITE PLAN NO.	N/A
DESIGN	JBB
DRAFT	ADG
DATE	JULY, 2014
SCALE	AS-SHOWN
SHEET	17 OF 21
	S-1 S-1
FILE NO:	43-274-24.1

Attached Xrefs_TB22x34 - PUBLIC/TB22x34

TEMPORARY TRAFFIC CONTROL REQUIREMENTS

1. THE PERMITTEE SHALL REFER TO THE ATTACHED TEMPORARY TRAFFIC CONTROL PLAN (TTCP) DRAWINGS TO SELECT THE APPROPRIATE WORK ZONE TRAFFIC CONTROLS FOR EACH PHASE OF CONSTRUCTION. WORK ZONE SITUATIONS WHICH ARE NOT ADDRESSED IN THE ATTACHED TTCP SHALL CONFORM TO THE GUIDELINES SET FORTH IN SECTION 6 OF THE MANUAL ON UNIFORM TRAFFIC CONTROL DEVICES FOR STREETS AND HIGHWAY (MUTCD), MOST RECENT EDITION.
2. THE PERMITTEE MUST HAVE A "CERTIFIED" TRAFFIC CONTROL MANAGER ON SITE DURING ALL PHASES OF CONSTRUCTION AT ALL TIMES.
3. EACH PHASE OF CONSTRUCTION, INCLUDING THE FOLLOW UP RESTORATION OPERATIONS SHALL BE PROVIDED WITH APPROPRIATE WORK ZONE TRAFFIC CONTROLS.
4. ROAD CLOSURES OF ANY DURATION SHALL REQUIRE THE SUBMITTAL OF A WRITTEN REQUEST TO THE TRAFFIC ENGINEERING DESIGN AND OPERATIONS SECTION WITH JUSTIFICATION AS TO WHY WORK ACTIVITY CANNOT OCCUR WHILE TRAFFIC IS BEING MAINTAINED. ROAD CLOSURE SHALL REQUIRE ADDITIONAL TRAFFIC CONTROLS INCLUDING ADVANCE NOTIFICATION, APPROACH, AND DETOUR SIGNAGE, AS APPROVED BY TRAFFIC ENGINEERING DESIGN AND OPERATIONS SECTION.
5. ALL SIDEWALK CLOSURES SHALL REQUIRE THE APPROVAL OF THE TRAFFIC ENGINEERING DESIGN AND OPERATIONS SECTION. ANY SIDEWALK CLOSURE GREATER THAN TWO (2) WEEKS SHALL REQUIRE THE SUBMITTAL OF A WRITTEN REQUEST TO THE DIVISION OF TRAFFIC ENGINEERING AND OPERATIONS AND MAY REQUIRE ADDITIONAL TEMPORARY TRAFFIC CONTROLS AND/OR TEMPORARY SIDEWALK BY-PASS. ANY WORK AFFECTING SIDEWALK SHALL BE SPECIFIED AND A PROPER PEDESTRIAN DETOUR SHALL BE SHOWN ON PLANS AND SUBMITTED FOR REVIEW. SIDEWALK CLOSURES SHALL BE LIMITED TO OCCUR ONLY DURING THE ACTUAL WORK ACTIVITY. DURING CLOSURE, SIDEWALKS SHALL BE BARRICADED TO PHYSICALLY PREVENT PEDESTRIAN PASSAGE AND APPROPRIATE PEDESTRIAN DETOURS SHALL BE POSTED. DURING ALL OTHER TIMES, PROVISIONS FOR SAFE PEDESTRIAN ACCESS THROUGH THE WORK AREA, VIA A TEMPORARY WALKWAY SHALL BE PROVIDED.
6. ANY WORK WITHIN THE TRAVELED PORTION OF ROADWAYS SHALL BE RESTRICTED TO THE HOURS OF 9:00 AM TO 3:30 PM, MONDAY THROUGH FRIDAY. WORK ON HOLIDAYS AND WEEKENDS SHALL NOT OCCUR UNLESS AN EXCEPTION IS GRANTED IN WRITING BY THE COUNTY'S DPS INSPECTOR.
7. CONSTRUCTION ACTIVITY, LOADING OR UNLOADING OF EQUIPMENT SHALL NOT BLOCK ANY TRAFFIC LANE OTHER THAN THOSE DELINEATED WITHIN THE WORK ZONE.
8. EXCLUSIVE OF EMERGENCY WORK, THE PERMITTEE SHALL CONTACT OCCUPANTS OF ALL ADJOINING PROPERTIES AND INFORM THEM OF THE SCOPE AND THE TIMING OF CONSTRUCTION. A MINIMUM OF 24 HOURS NOTIFICATION SHALL BE REQUIRED PRIOR TO THE COMMENCEMENT OF ANY ACTIVITY ON THE SITE.
9. ACCESS SHALL BE MAINTAINED TO ALL DRIVEWAYS UNLESS PERMISSION FOR CLOSURE IS GRANTED BY THE PROPERTY OWNER/MANAGER. HOWEVER, ACCESSIBILITY FOR EMERGENCY VEHICLES SHALL BE MAINTAINED AT ALL TIMES.
10. PAVEMENT EXCAVATION SHALL BE LIMITED TO A MAXIMUM OF ONE TRAVEL LANE AT ANY TIME UNLESS OTHERWISE SPECIFIED ON THE TTCP.
11. IF ANY TRAFFIC CONTROL SIGNS ARE TO BE PLACED ALONG A MSHA ROADWAY OR WITHIN THE LIMITS OF AN INCORPORATED AREA, THE PERMITTEE SHALL NOTIFY THE APPROPRIATE AGENCY OF SIGNAGE TO BE INSTALLED.
12. NO HAZARDOUS MATERIALS SHALL BE STORED WITHIN PUBLIC RIGHT-OF-WAY. NO MATERIALS OR EQUIPMENT SHALL BE STORED ON THE ROADWAY SURFACES OR SIDEWALK DURING NON-WORK HOURS.
13. ALL EXISTING TRAFFIC CONTROL DEVICES (I.E. SIGNS, MARKING, ETC.) THAT MUST BE REMOVED SHALL BE REPLACED IN THEIR PROPER LOCATION PRIOR TO THE COMPLETION OF THE PROJECT. COST FOR THE REPLACEMENT AND/OR REPAIR OF DEVICES DAMAGED AS A RESULT OF THE PROJECT SHALL BE ASSESSED TO THE PERMITTEE.
14. FOR MERGING, SHIFTING, SHOULDER TAPER, THE MAXIMUM SPACING BETWEEN DEVICES EQUALS THE POSTED SPEED IN FEET.
15. ALL TEMPORARY TRAFFIC CONTROL DEVICES SHALL CONFORM TO THE MOST RECENT EDITION OF THE MUTCD. ALL SIGNS, TRAFFIC DRUMS AND CONES SHALL BE FULLY REFLECTORIZED WITH HIGH INTENSITY, REFLECTIVE SHEETING AS PER THE MUTCD.
16. PROVISION SHALL BE MADE FOR SAFE MAINTENANCE OF PEDESTRIAN AND BICYCLE TRAFFIC, SUBJECT TO APPROVAL OF THE COUNTY'S DPS INSPECTOR. AT LEAST ONE 10-FOOT TRAVEL LANE SHALL BE AVAILABLE FOR TRAFFIC AT ALL TIMES.
17. SIGNAGE, TRAFFIC DRUMS, TRAFFIC CONES, AND ARROW PANELS SHALL BE PLACED IN ACCORDANCE WITH THE APPROPRIATE TYPICAL AND SPACING CHART. WORK AREA AHEAD (W20-1 MODIFIED) SIGNS MUST BE INSTALLED AT THE END OF EACH WORKDAY WHEN TEMPORARY AGGREGATE RAMPING IS IMPLEMENTED. CHANNELIZING DEVICES SHALL BE PLACED ALONG EXCAVATIONS AT TEN (10) FOOT INTERVALS. ARROW PANELS (FLASHING MODE ONLY) SHALL BE USED AT THE BEGINNING OF ANY LANE CLOSURE ON A MULTI-LANE ROADWAY.
18. APPROPRIATE DISTANCES FOR SIGN LEGENDS ARE "AHEAD", "500 FT", "1000 FT", "1500 FT", OR "1/2 MILE". FOR DISTANCES LESS THAN 500 FEET, "AHEAD" SHALL BE USED.
19. ALL WARNING SIGNS, UNLESS OTHERWISE SPECIFIED, SHALL BE A MINIMUM OF 48" X 48", BLACK SYMBOL OR LEGEND ON ORANGE BACKGROUND AND DIAMOND SHAPED. ALL WARNING SIGNS NOT APPLICABLE TO THE ACTUAL SITUATION SHALL BE REMOVED OR COVERED DURING NON-APPLICABLE PERIODS. ALL PORTABLE SIGNS SHALL BE MOUNTED A MINIMUM OF ONE (1) FOOT ABOVE THE LEVEL OF THE ROADWAY, WITH HIGHER MOUNTING HEIGHTS DESIRABLE.
20. DURING NIGHTTIME OPERATIONS TRAFFIC DRUMS SHALL BE USED. HOWEVER, FOR EMERGENCY WORK ACTIVITIES WHERE TRAFFIC DRUMS ARE NOT READILY AVAILABLE, REFLECTORIZED TRAFFIC CONES THAT ARE A MINIMUM OF TWENTY EIGHT (28) INCHES IN HEIGHT AND HAVING SIX (6) INCH AND FOUR (4) INCH REFLECTIVE COLLARS WITHIN THE TOP SIXTEEN (16) INCHES OF THE CONE MAY BE USED. ALL WORK AREAS LEFT UNATTENDED AT NIGHT SHALL BE DELINEATED WITH TRAFFIC DRUMS.
21. WHEN TEMPORARY CONCRETE BARRIER (TCB) IS USED, REFLECTORIZED MARKERS ARE REQUIRED AS PER TTCP 109.02. ALSO, A 12" X 36" OBJECT MARKER (VERTICAL PANEL AS PER TCP 109.01) SHALL BE INSTALLED.
22. WHEN PAVEMENT MARKINGS HAVE BEEN OBLITERATED BY THE WORK ACTIVITY, THE PERMITTEE SHALL INSTALL ANY CRITICAL INTERIM PAVEMENT MARKINGS PRIOR TO THE END OF THE WORKDAY AS SPECIFIED BY THE COUNTY'S DPS INSPECTOR AND/OR THE DIVISION OF TRAFFIC ENGINEERING AND OPERATIONS. ON ROAD SECTIONS THAT ARE NOT SCHEDULED TO BE OVERLAID, ALL TEMPORARY PAVEMENT MARKINGS SHALL BE (REMOVABLE) DETOUR GRADE MARKING TAPE. ANY CONFLICTING MARKINGS, WHICH NEED TO BE TEMPORARILY REMOVED, ARE TO BE MASKED USING "3M REMOVABLE BLACK LANE MASK" OR AN APPROVED EQUAL. ON ROAD SECTIONS THAT ARE TO BE OVERLAID, TEMPORARY MARKINGS CAN BE EITHER TAPE OR PAINT. ANY CONFLICTING MARKINGS SHOULD BE REMOVED WITH A PAVEMENT GRINDER.

FLAGGING OPERATIONS

1. WHEN POSSIBLE, TWO-WAY TRAFFIC SHALL BE MAINTAINED, OTHERWISE, FLAGGERS SHALL BE USED TO CONTROL TRAFFIC.
2. FLAGGERS SHALL BE MARYLAND STATE HIGHWAY ADMINISTRATION OR AATSA APPROVED FLAGGERS AND SHALL BE USED AT THE DIRECTION OF THE COUNTY INSPECTOR. FLAGGERS SHALL USE STOP/SLOW PADDLES TO DIRECT TRAFFIC.
3. RADIO COMMUNICATION SHALL BE REQUIRED BETWEEN FLAGGERS AT THE DISCRETION OF THE COUNTY INSPECTOR OR UNDER THE FOLLOWING CONDITIONS:
   A. IF THE FLAGGERS CANNOT SEE EACH OTHER.
   B. IF THE LANE CLOSURE EXCEEDS 200 FEET.

CONTACT INFORMATION

1. THE PERMITTEE SHALL CONTACT THE TRAFFIC ENGINEERING DESIGN & OPERATIONS SECTION (TEDO) AT 240-777-6000 AT LEAST TEN (10) WORKING DAYS IN ADVANCE OF THE FINAL PAVING OPERATION TO SCHEDULE THE INSTALLATION OF PERMANENT PAVEMENT MARKINGS AND SIGNS.
2. FIELD ASSISTANCE BY THE MCDOT, DIVISION OF TRAFFIC ENGINEERING AND OPERATIONS IS AVAILABLE UPON REQUEST. CONTACT TRAFFIC ENGINEERING DESIGN & OPERATIONS SECTION (TEDO) AT 240-777-6000.

PARKING RESTRICTIONS

1. PERMITTEE SHALL CONTACT THE MCDOT, DIVISION OF PARKING MANAGEMENT AT 240-777-6000 A MINIMUM OF 48 HOURS IN ADVANCE TO ARRANGE FOR PAYMENT AND THE BAGGING OF ALL PARKING METERS WITHIN THE WORK ZONE. METER NUMBERS AND LOCATION MUST BE SPECIFIED.
2. DPS INSPECTOR AT ANY TIME. PROHIBITING THE USE OF METERED SPACES BY THE CONTRACTOR/PERMITTEE WITHOUT RECEIPT OF "BAGGING AGREEMENT" IS SUBJECT TO FINES.
3. CONTRACTOR/PERMITTEE SHALL COORDINATE WITH DIVISION OF PARKING MANAGEMENT TO MAKE PAYMENT FOR ADDITIONAL BAGGING AND REMOVAL WHENEVER MORE SPACES ARE TEMPORARILY REQUIRED
4. ALL EXISTING MONTGOMERY COUNTY "PARKING" SIGNS SHALL BE COVERED OR BAGGED BY THE CONTRACTOR/PERMITTEE FOR THE DURATION OF WORK; AND A TEMPORARY "NO PARKING ANYTIME" (R7-4) SIGN SHALL BE INSTALLED IN THE AFFECTED PARKING SPACE(S). EXISTING MONTGOMERY COUNTY PARKING METER PIPES/POLES SHALL NOT BE USED FOR TEMPORARY INSTALLATION.
5. WHEN IT IS NECESSARY TO RESTRICT PARKING IN A NON-METERED AREA TO FACILITATE WORK ACTIVITY, THE PERMITTEE SHALL CONTACT THE APPROPRIATE COUNTY POLICE STATION FOR TEMPORARY "NO PARKING" SIGNS.
6. THE CONTRACTOR/PERMITTEE SHALL RESTORE ALL AFFECTED MONTGOMERY COUNTY PARKING SIGNAGE TO THEIR PREVIOUS CONDITION.

MISS UTILITY

Call "Miss Utility" at 1-800-257-7777, 48 hours prior to the start of work. The excavator must notify all public utility companies with underground facilities in the area of proposed excavation and have those facilities located by the utility companies prior to commencing excavation. The excavator is responsible for compliance with requirements of Chapter 36A of the Montgomery County Code.

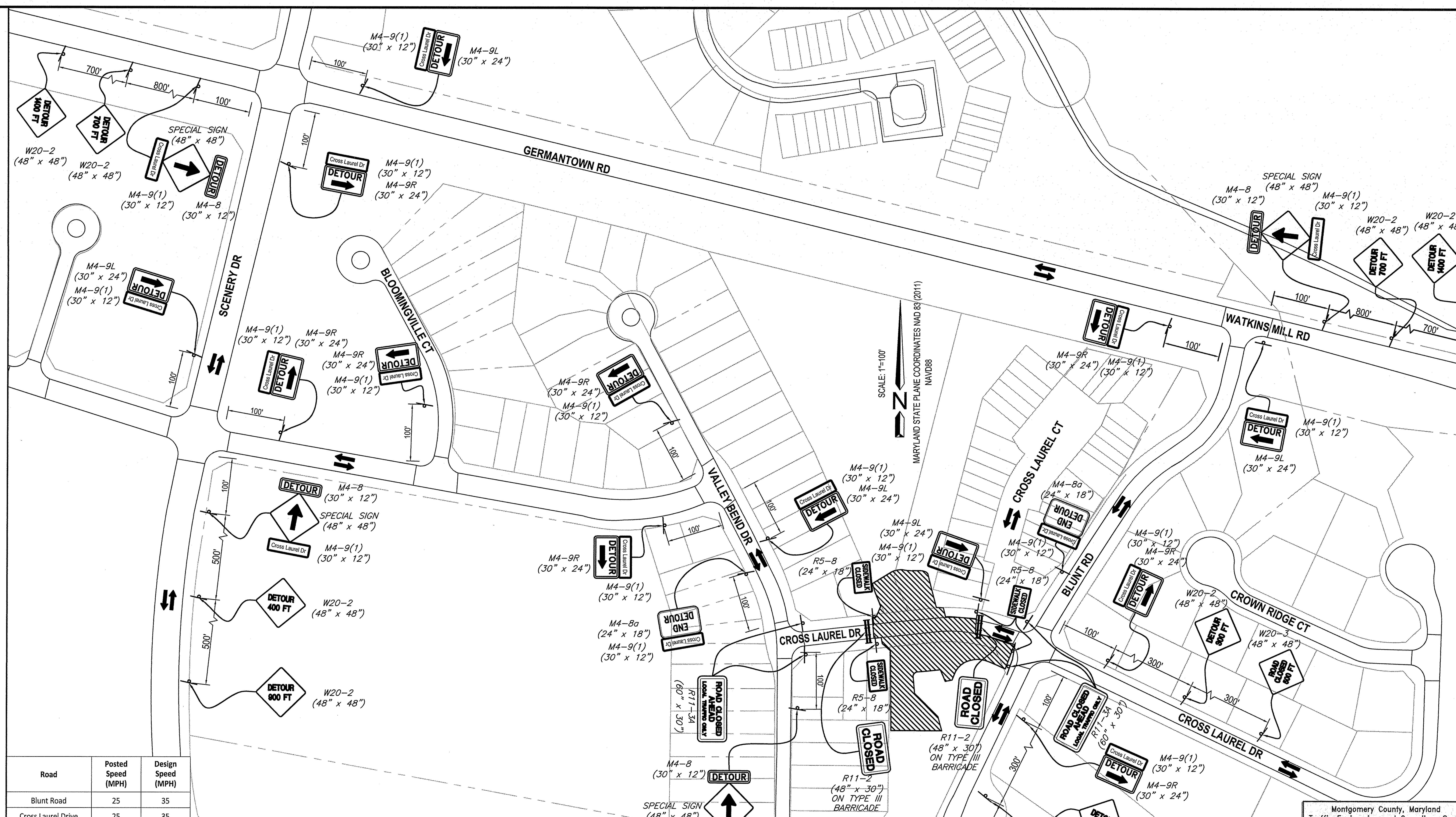

Road	Posted Speed (MPH)	Design Speed (MPH)
Blunt Road	25	35
Cross Laurel Drive	25	35
Germantown Road	40	50
Scenery Drive	30	40
Valley Bend Drive	25	35
Bloomingville Court	25	35
Cross Laurel Court	25	35

SEQUENCE OF CONSTRUCTION

1. INSTALL SEDIMENT CONTROLS, TREE PROTECTION MEASURES AND MOT MEASURES - 2 WEEKS.
2. CLOSE ROAD THEN COMPLETE RIGHT-OF-WAY DEMOLITION WORK - 2 WEEKS
3. COMPLETE EMBANKMENT EXCAVATION AND CULVERT REPLACEMENT WORK - 4 MONTHS.
4. COMPLETE EMBANKMENT RE-BUILD - 1 MONTH.
5. RE-INSTALL PAVEMENT, CURB AND GUTTER AND SIDEWALK - 1 MONTH
6. RE-OPEN ROAD TO TRAFFIC THEN COMPLETE REMAINING PROJECT WORK - 2 MONTHS

Montgomery County, Maryland
Traffic Engineering and Operations Section
APPROVED
FOR MOT/TTCP
BY: Stella [signature]
04/10/14
Date

PLAN VIEW

GRAPHIC SCALE
100 0 50 100 200
SCALE: 1" = 100'

PAVEMENT DROP-OFF

1. ANY EXCAVATION(S) IN THE ROADWAY SHALL BE PAVED TO LEVEL GRADE OR PLATED AND THE ROADWAY REOPENED TO ITS FULL CROSS-SECTION PRIOR TO THE END OF EACH WORKDAY. "STEEL PLATES" (W95-5(1)) SIGNS SHALL BE PLACED APPROXIMATELY 250 FEET IN ADVANCE OF ANY STEEL PLATE. ANY EXCAVATIONS IN THE SIDEWALK SHALL BE BACKFILLED OR PLATED PRIOR TO THE END OF EACH WORKDAY AND SIDEWALK REOPENED TO ITS FULL CROSS SECTION.
2. TRAFFIC SHALL NOT BE PERMITTED WITHIN TEN (10) FEET OF ANY EXCAVATION THAT RESULTS IN A VERTICAL DROP-OFF OF MORE THAN FIVE (5) INCHES IN THE LEVEL OF PAVEMENT DURING NON-WORKING HOURS UNLESS PROTECTED BY TEMPORARY CONCRETE BARRIERS OR RAMPED WITH AGGREGATE MATERIAL AT A 3:1 OR FLATTER SLOPE FROM THE EDGE OF PAVEMENT. WHEN RAMPING IS UTILIZED, TEMPORARY TRAFFIC CONTROL DRUMS SHALL BE POSITIONED ADJACENT TO THE EDGE OF THE WORK AREA ON THE TRAFFIC SIDE OF THE SLOPE.
3. TRAFFIC SHALL NOT BE PERMITTED WITHIN TWO (2) FEET OF ANY EXCAVATION THAT RESULTS IN A VERTICAL DROP-OFF OF MORE THAN TWO (2) INCHES BUT NO MORE THAN FIVE (5) INCHES IN THE LEVEL OF PAVEMENT DURING NON-WORKING HOURS UNLESS EITHER RAMPED WITH AGGREGATE MATERIAL AT A 3:1 OR FLATTER SLOPE, PROVIDED WITH AN ABUTTING WEDGE OF BITUMINOUS MATERIAL AT A 3:1 OR FLATTER SLOPE OR PROTECTED BY TRAFFIC DRUMS.
4. IN AREAS WHERE A DROP-OFF IN THE LEVEL OF PAVEMENT IS TWO (2) INCHES OR LESS, TRAFFIC MAY BE ALLOWED TO FREELY CROSS UNDER THE FOLLOWING CONDITIONS:
   A. WHERE LONGITUDINAL PAVING JOINTS OF TWO (2) INCHES OR LESS ARE EXPOSED TO TRAFFIC, WARNING SIGNS SHALL BE POSTED INDICATING "UNEVEN LANES" (W8-11). THESE SIGNS SHOULD BE PLACED 250 FEET IN ADVANCE OF THE UNEVEN JOINT AND BE SPACED AT APPROPRIATE INTERVALS THROUGHOUT THE AREA OF THE UNEVEN JOINT.
   B. WHERE LATERAL PAVING JOINTS OF TWO (2) INCHES OR LESS ARE EXPOSED TO TRAFFIC, A "BUMP" (W8-1) SIGN SHALL BE POSTED 100 FEET IN ADVANCE OF THE JOINT.
   C. WHEN MILLED PAVEMENT IS LEFT EXPOSED TO TRAFFIC A "ROUGH ROAD"(W8-8) OR "GROOVED PAVEMENT" (W8-8A) SIGN SHALL BE PLACED 250 FEET IN ADVANCE OF THE MILLED AREA.

INSPECTOR AUTHORITY

1. THE COUNTY'S DEPARTMENT OF PERMITTING SERVICES (DPS) INSPECTOR HAS THE AUTHORITY TO MODIFY THE TTCP AS DEEMED NECESSARY. THE INSPECTOR HAS THE AUTHORITY TO ORDER THE PERMITTEE TO STOP WORK AND VACATE THE PUBLIC RIGHT-OF-WAY IF THE TTCP IS NOT COMPLIED WITH.
2. THE IMPLEMENTATION DATE AND CONTINUANCE OF WORK ACTIVITIES MAY BE ALTERED AT THE DISCRETION OF THE COUNTY'S DPS INSPECTOR IN THE EVENT OF CONFLICTS WITH PREVIOUSLY APPROVED OR EMERGENCY ACTIVITIES.

MISCELLANEOUS

1. THE PERMITTEE WILL BE SOLELY RESPONSIBLE FOR ALL ACCIDENTS AND/OR DAMAGE TO PERSONS AND/OR PROPERTY DAMAGE RESULTING FROM HIS OPERATIONS.
2. HAZARDOUS MATERIALS SHALL NOT BE STORED WITHIN PUBLIC RIGHT-OF-WAY. NO MATERIALS OR EQUIPMENT SHALL BE STORED ON THE ROADWAY SURFACE OR SIDEWALK DURING NON-WORK PERIODS. ALL STORED MATERIALS AND EQUIPMENT SHALL BE SET BACK AT LEAST SIX (6) FEET BEHIND THE CURB ALONG A CLOSED SECTION ROADWAY AND AT LEAST TWELVE (12) FEET FROM THE EDGE OF AN OPEN SECTION ROADWAY.
3. ALL TEMPORARY TRAFFIC CONTROL (TTC) DEVICES SHALL BE REMOVED AS SOON AS PRACTICAL WHEN THEY ARE NO LONGER NEEDED. WHEN WORK IS SUSPENDED FOR SHORT PERIODS OF TIME, TTC DEVICES THAT ARE NO LONGER APPROPRIATE SHALL BE REMOVED OR COVERED.
4. AT THE COMPLETION OF WORK ACTIVITIES, CONDITIONS WITHIN THE PUBLIC SPACE SHALL BE FULLY RESTORED TO THOSE THAT EXISTED PRIOR TO THE WORK ACTIVITY.

LEGEND

WORKZONE	(hatched area)
SIGN	
DIRECTION OF TRAFFIC	←
TYPE III BARRICADE	

STATE OF MARYLAND — JEFFREY BRIAN BLASS — 32457 — PROFESSIONAL ENGINEER

PROFESSIONAL CERTIFICATION
I HEREBY CERTIFY THAT THESE DOCUMENTS WERE PREPARED OR APPROVED BY ME, AND THAT I AM A DULY LICENSED PROFESSIONAL ENGINEER UNDER THE LAWS OF THE STATE OF MARYLAND.
LICENSE #: 32457
EXPIRATION DATE: 06/20/2016

MAINTENANCE OF TRAFFIC PLAN

REGIONAL STORMWATER MANAGEMENT
POND REPAIR AND RETROFIT (2014)

CHADSWOOD

GERMANTOWN (9th) ELECTION DISTRICT
MONTGOMERY COUNTY, MARYLAND

CPJ Associates
Charles P. Johnson & Associates, Inc.
Civil and Environmental Engineers • Planners • Landscape Architects • Surveyors
1751 Elton Rd., Ste. 300 Silver Spring, MD 20903 301-434-7000 Fax: 301-434-9394
www.cpja.com • Silver Spring, MD • Gaithersburg, MD • College Park, MD • Frederick, MD • Fairfax, VA

CLIENT: MONTGOMERY COUNTY
DEPARTMENT OF ENVIRONMENTAL PROTECTION
255 ROCKVILLE PIKE SUITE 120
ROCKVILLE, MARYLAND 20850
CONTACT: GENE GOPENKO, P.E.
PHONE:(240) 777-7723

COPYRIGHT © LATEST DATE HEREON CHARLES P. JOHNSON & ASSOCIATES, INC. ALL RIGHTS RESERVED, UNAUTHORIZED USE OR REPRODUCTION IS PROHIBITED.

PRELIMINARY PLAN NO:	SITE PLAN NO:	
N/A	N/A	
DESIGN: JBB	SHEET 18	OF 21
DRAFT: ADG	MOT-1	MOT-1
DATE: JULY, 2014	FILE NO: 43-274-24.1	
SCALE: 1"=100'		

MONTGOMERY COUNTY GENERAL NOTES

1. ALL CONSTRUCTION WITHIN DEDICATED COUNTY RIGHTS OF WAY WILL BE IN ACCORDANCE WITH THE LATEST EDITION OF THE MONTGOMERY COUNTY ROAD CONSTRUCTION CODE AND STANDARD SPECIFICATIONS.
2. STANDARDS AND DETAILS REFERRED TO ARE THOSE OF THE MONTGOMERY COUNTY UNLESS OTHERWISE NOTED.
3. ALL MATERIALS AND WORKMANSHIP WILL BE IN ACCORDANCE WITH THE MSHA STANDARD SPECIFICATIONS FOR CONSTRUCTION AND MATERIALS, LATEST EDITION INCLUDING INTERIM SPECIFICATION ADDENDA.
4. UNSUITABLE MATERIAL WILL BE REMOVED AND REPLACED WITH SUITABLE MATERIAL AS DIRECTED BY THE INSPECTOR.
5. TOP OF CURB ELEVATIONS TO BE FIELD ADJUSTED BY THE INSPECTOR AS REQUIRED TO MEET FIELD CONDITIONS.
6. ALL PROPOSED PAVING AND CURB SECTIONS WILL MEET EXISTING SECTIONS IN LINE AND GRADE AS DIRECTED BY THE INSPECTOR.
7. CONSTRUCT SIDEWALK RAMPS WHERE INDICATED BY "*" ON THE PLANS, RAMP TYPES TO BE AS NOTED.
8. ALL STORM DRAINAGE CONSTRUCTION SHOWN ON THIS PLAN WILL BE MAINTAINED BY THE MONTGOMERY COUNTY DEPARTMENT OF TRANSPORTATION AFTER FINAL ACCEPTANCE OF THE PERMANENT SYSTEM, UNLESS OTHERWISE NOTED. THE PRINCIPAL SPILLWAY (TWIN 72" R.C.P.) PIPES ARE TO BE MAINTAINED BY MCDEP.
9. TREES WHICH DO NOT HAVE TO BE CLEARED FOR CONSTRUCTION WILL REMAIN UNLESS OTHERWISE DIRECTED.
10. INFORMATION CONCERNING UNDERGROUND UTILITIES WAS OBTAINED FROM AVAILABLE RECORDS, HOWEVER, THE CONTRACTOR MUST DETERMINE THE EXACT LOCATIONS AND ELEVATIONS BY DIGGING TEST PITS BY HAND AT ALL UTILITY CROSSINGS WELL IN ADVANCE OF TRENCHING. IF ACTUAL CLEARANCES ARE LESS THAN SHOWN ON THIS PLAN OR 12 INCHES, THE CONTRACTOR MUST CONTACT THE MCDOT INSPECTOR BEFORE PROCEEDING WITH CONSTRUCTION.
11. NOTIFY "MISS UTILITY" (1-800-257-7777) 72 HOURS IN ADVANCE OF ANY EXCAVATION.
12. ALL STORM DRAIN STRUCTURES ARE SUBJECT TO MODIFICATION BY THE DPS ROW INSPECTOR TO MEET FIELD CONDITIONS.
13. PRECAST STRUCTURES CAN NOT BE SUBSTITUTED FOR FIELD-BUILT STRUCTURES WITHOUT PRIOR APPROVAL OF THE MONTGOMERY COUNTY DEPARTMENT OF TRANSPORTATION AND THE ENGINEER.
14. WHERE THE DROP ON THE MAIN LINE THROUGH A STRUCTURE CAN BE ACCOMMODATED BY AN INVERT SLOPE OF 1 1/2:1 FLATTER, A ROUNDED CHANNEL LINED WITH SEWER BRICK ON EDGE WILL BE BUILT TO THE CROWN OF THE PIPES.
15. ALL BEDDING WILL BE CLASS C IN ACCORDANCE WITH MONTGOMERY COUNTY STANDARDS, UNLESS OTHERWISE NOTED.
16. WHERE ANY PORTION OF THE PROPOSED STORM DRAIN SYSTEM IS LOCATED IN A FILL SECTION, PROVIDE SELECT FILL MATERIAL COMPACTED TO 95% A.A.S.H.T.O. T-99 DENSITY FROM ORIGINAL UNDISTURBED GROUND UP TO STRUCTURE BOTTOM SLABS AND PIPE BEDDING.
17. STORM DRAIN PIPES, AS INSTALLED, WILL CONFORM AS APPLICABLE TO THE FOLLOWING MINIMUM STANDARDS:

    REINFORCED CONCRETE PIPE ---------- A.A.S.H.T.O. M-170
    CORRUGATED STEEL PIPE ---------- A.A.S.H.T.O. M-36
    CORRUGATED ALUMINUM PIPE ---------- A.A.S.H.T.O. M-196
    H.D.P.E. PIPES ---------- A.A.S.H.T.O. M-294M-98 ASTM F810-99

    ALL CORRUGATED METAL PIPE WILL BE HELICALLY CORRUGATED, 16 GAUGE MINIMUM, WITH 1/2" X 2 2/3" CORRUGATIONS, UNLESS OTHERWISE NOTED.
18. PIPES LABELLED CMP ON THIS PLAN MAY BE EITHER STEEL OR ALUMINUM. ALUMINUM SURFACES THAT ARE IN CONTACT WITH CONCRETE WILL BE PAINTED WITH ONE COAT OF ZINC CHROMATE PRIMER.
19. BACKFILL W.S.S.C. UTILITIES ONLY UNDER THE SUPERVISION OF THE W.S.S.C. MAINTENANCE DIVISION.
20. GRADE ALL DISTURBED AREAS TO PROVIDE POSITIVE DRAINAGE.
21. ALL UNPAVED AREAS WITHIN THE LIMITS OF CONSTRUCTION WILL BE SEEDED OR SODDED AS DIRECTED.
22. TOP OF CURB INFORMATION HAVE NOT BEEN REVIEWED IN THIS APPROVAL. IT IS THE ENGINEER'S RESPONSIBILITY TO ENSURE ALL RELATED INFORMATION FULLY AGREES WITH EXISTING ROAD CROSS SECTION, COUNTY RELATED STANDARDS AND REQUIREMENTS.

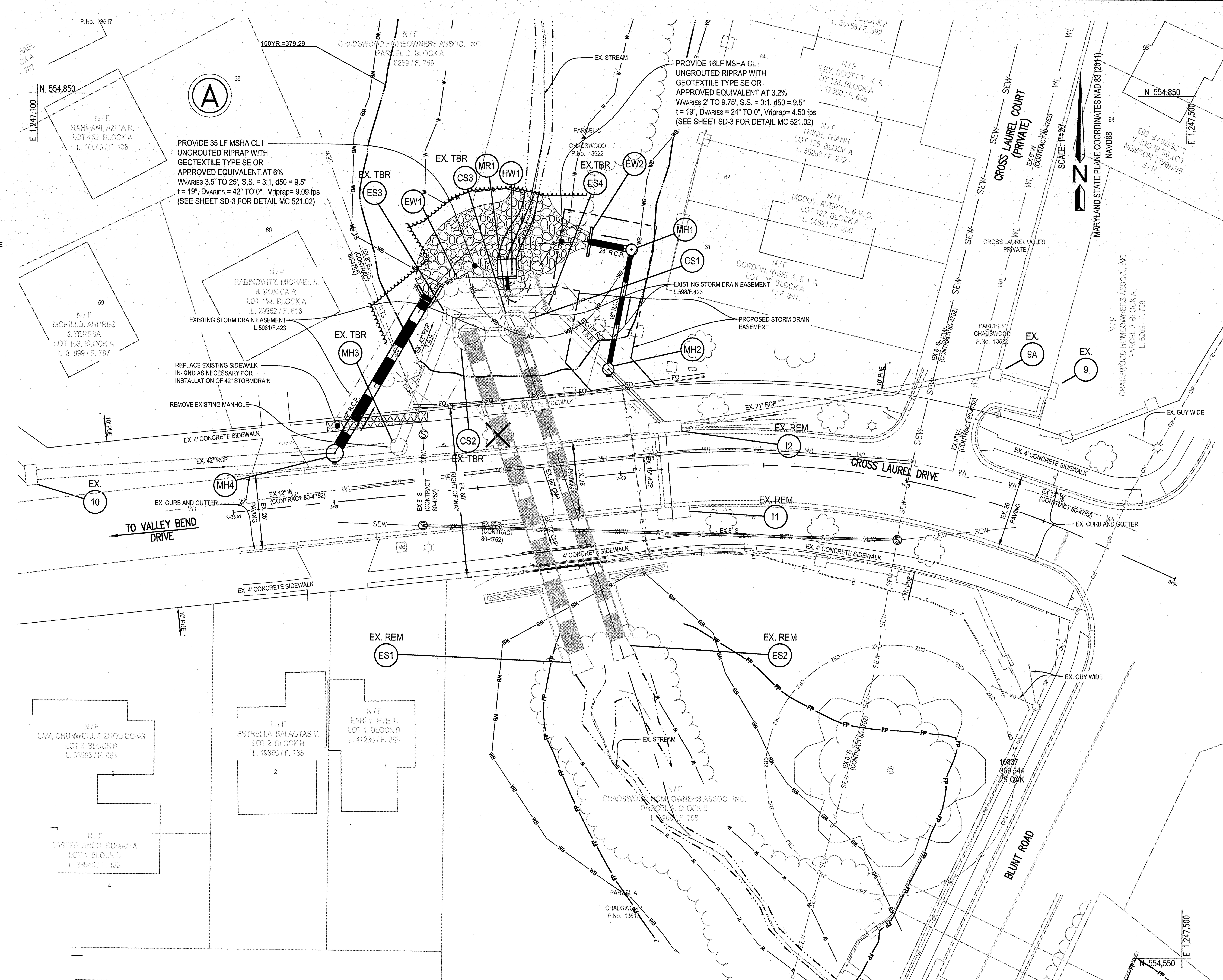

GRAPHIC SCALE

SCALE: 1" = 20'

GENERAL NOTES:

1. THIS PLAN SHALL ONLY BE USED FOR THE CONSTRUCTION OF STORM DRAIN AND ASSOCIATED STORM DRAIN IMPROVEMENTS WITHIN THE PUBLIC RIGHT-OF-WAY AND/OR EASEMENT AS SHOWN. THIS PLAN IS NOT TO BE USED FOR ANY OTHER CONSTRUCTION PURPOSE.

MISS UTILITY

Call "Miss Utility" at 1-800-257-7777, 48 hours prior to the start of work. The excavator must notify all public utility companies with underground facilities in the area of proposed excavation and have those facilities located by the utility companies prior to commencing excavation. The excavator is responsible for compliance with requirements of Chapter 36A of the Montgomery County Code.

PROFESSIONAL CERTIFICATION
I HEREBY CERTIFY THAT THESE DOCUMENTS WERE PREPARED OR APPROVED BY ME, AND THAT I AM A DULY LICENSED PROFESSIONAL ENGINEER UNDER THE LAWS OF THE STATE OF MARYLAND.
LICENSE # 32457
EXPIRATION DATE: 06/20/2016

DPS PERMIT # 306289

MONTGOMERY COUNTY, MARYLAND
DEPARTMENT OF PERMITTING SERVICES

FINAL APPROVAL

DATE: ________ 19 ____

BY: ________

*SUBJECT TO DEDICATION OF RIGHT OF WAY AND EASEMENTS PER COUNTY CODE SECTION 50.
REVISION APPROVALS

STORM DRAIN PLAN

REGIONAL STORMWATER MANAGEMENT
POND REPAIR AND RETROFIT (2014)

CHADSWOOD

GERMANTOWN (9th) ELECTION DISTRICT
MONTGOMERY COUNTY, MARYLAND

CPJ Associates Charles P. Johnson & Associates, Inc.
Civil and Environmental Engineers • Planners • Landscape Architects • Surveyors
1751 Elton Rd., Ste. 300 Silver Spring, MD 20903 301-434-7000 Fax: 301-434-9394
www.cpja.com • Silver Spring, MD • Gaithersburg, MD • College Park, MD • Frederick, MD • Fairfax, VA

CLIENT: MONTGOMERY COUNTY DEPARTMENT OF ENVIRONMENTAL PROTECTION
255 ROCKVILLE PIKE SUITE 120
ROCKVILLE, MARYLAND 20850
CONTACT: GENE GOPENKO, P.E.
PHONE:(240) 777-7723

PRELIMINARY PLAN NO.	SITE PLAN NO.	
N/A	N/A	
DESIGN JBB	SHEET 19	OF 21
DRAFT ADG	SD-1	SD-3
DATE JULY, 2014	FILE NO.: 43-274-24.1	
SCALE 1"=20'		

COPYRIGHT © LATEST DATE HEREON CHARLES P. JOHNSON & ASSOCIATES, INC. ALL RIGHTS RESERVED, UNAUTHORIZED USE OR REPRODUCTION IS PROHIBITED.

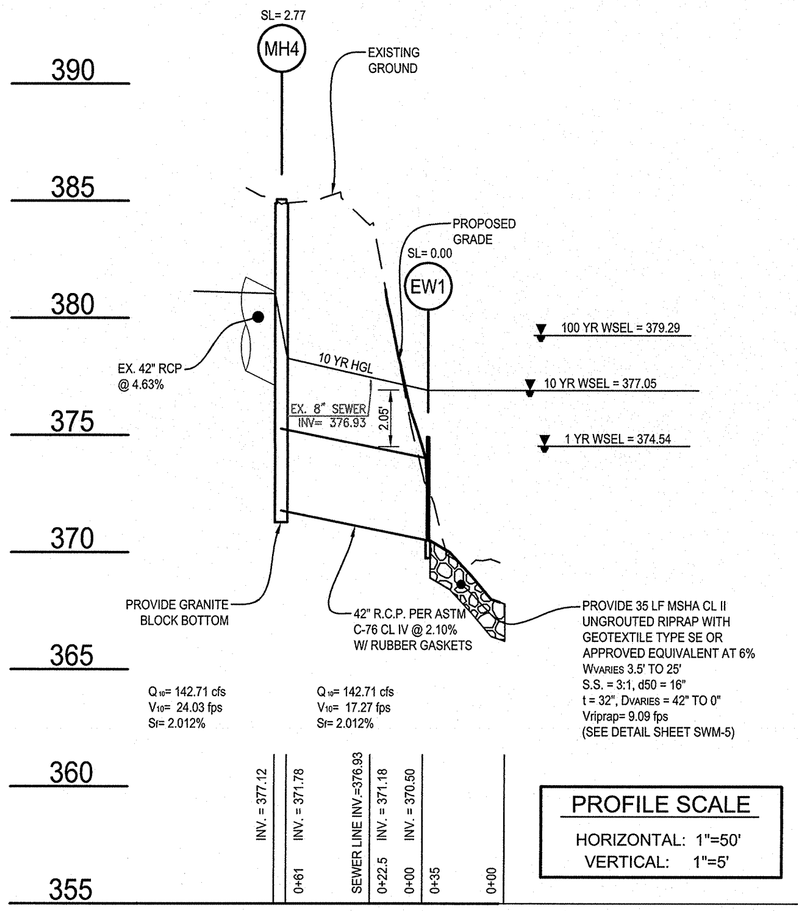

PROFILE SCALE
HORIZONTAL: 1"=50'
VERTICAL: 1"=5'

STORM DRAIN PROFILE (STR. MH4 - EW1)

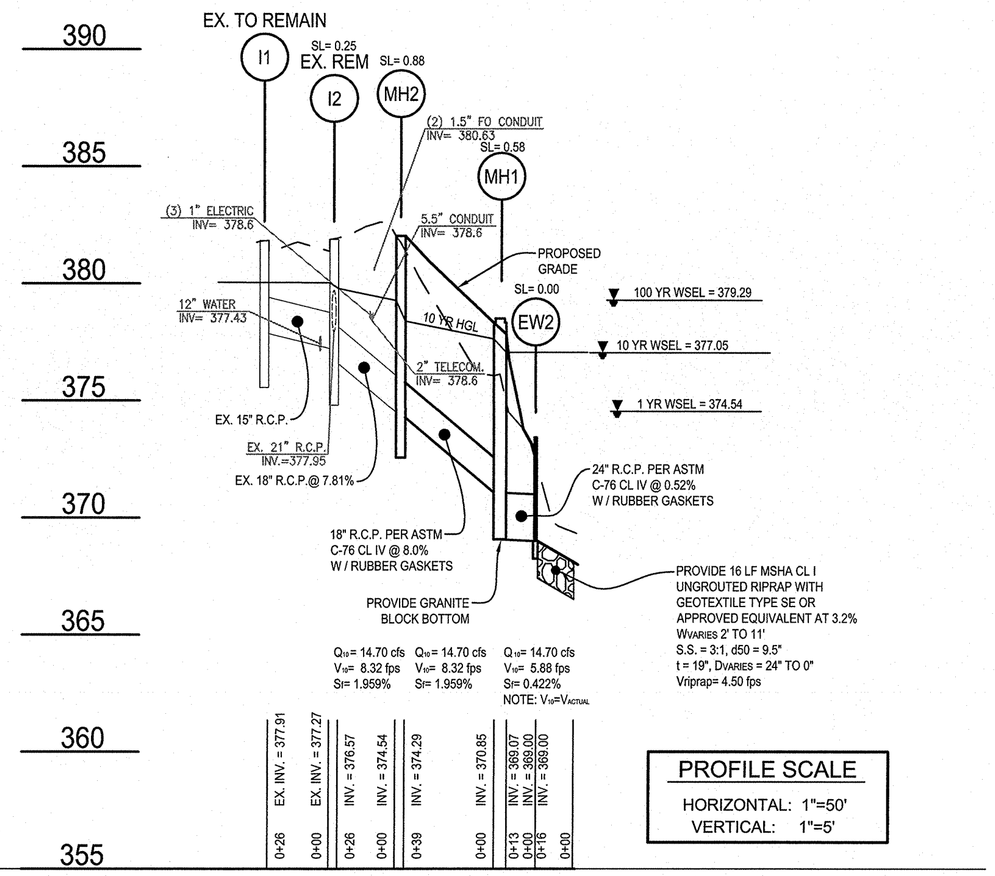

PROFILE SCALE
HORIZONTAL: 1"=50'
VERTICAL: 1"=5'

STORM DRAIN PROFILE (STR. I3 - EW2)

GRAPHIC SCALE
50 0 25 50 100
SCALE: 1" = 50'

GENERAL NOTES:
1. THIS PLAN SHALL ONLY BE USED FOR THE CONSTRUCTION OF STORM DRAIN AND ASSOCIATED STORM DRAIN IMPROVEMENTS WITHIN THE PUBLIC RIGHT-OF-WAY AND/OR EASEMENT AS SHOWN. THIS PLAN IS NOT TO BE USED FOR ANY OTHER CONSTRUCTION PURPOSE.

MISS UTILITY

Call "Miss Utility" at 1-800-257-7777, 48 hours prior to the start of work. The excavator must notify all public utility companies with underground facilities in the area of proposed excavation and have those facilities located by the utility companies prior to commencing excavation. The excavator is responsible for compliance with requirements of Chapter 36A of the Montgomery County Code.

STATE OF MARYLAND
JEFFREY BRIAN GOPENKO
32457
PROFESSIONAL ENGINEER
12/21/2014

PROFESSIONAL CERTIFICATION
I HEREBY CERTIFY THAT THESE DOCUMENTS WERE PREPARED OR APPROVED BY ME, AND THAT I AM A DULY LICENSED PROFESSIONAL ENGINEER UNDER THE LAWS OF THE STATE OF MARYLAND.
LICENSE #: 32457
EXPIRATION DATE: 06/20/2016

DPS PERMIT # 306289

MONTGOMERY COUNTY, MARYLAND
DEPARTMENT OF PERMITTING SERVICES

FINAL APPROVAL

DATE: _____ 19 ____

BY: _____

*SUBJECT TO DEDICATION OF RIGHT OF WAY AND EASEMENTS PER COUNTY CODE SECTION 50.

REVISION APPROVALS

△ _____

⊙ _____

⊹ _____

STORM DRAIN PROFILES

REGIONAL STORMWATER MANAGEMENT
POND REPAIR AND RETROFIT (2014)

CHADSWOOD

GERMANTOWN (9th) ELECTION DISTRICT
MONTGOMERY COUNTY, MARYLAND

CPJ Associates
Charles P. Johnson & Associates, Inc.
Civil and Environmental Engineers • Planners • Landscape Architects • Surveyors
1751 Elton Rd., Ste. 300 Silver Spring, MD 20903 301-434-7000 Fax: 301-434-9394
www.cpja.com • Silver Spring, MD • Gaithersburg, MD • College Park, MD • Frederick, MD • Fairfax, VA

CLIENT: MONTGOMERY COUNTY
DEPARTMENT OF ENVIRONMENTAL PROTECTION
255 ROCKVILLE PIKE SUITE 120
ROCKVILLE, MARYLAND 20850
CONTACT: GENE GOPENKO, P.E.
PHONE:(240) 777-7723

COPYRIGHT © LATEST DATE HEREON CHARLES P. JOHNSON & ASSOCIATES, INC. ALL RIGHTS RESERVED, UNAUTHORIZED USE OR REPRODUCTION IS PROHIBITED.

PRELIMINARY PLAN NO.	N/A
SITE PLAN NO.	N/A
DESIGN	JBB
DRAFT	ADG
DATE	JULY, 2014
SCALE	AS-SHOWN
SHEET	20 OF 21
	SD-2 SD-3
FILE NO :	43-274-24.1

Last Saved 7/14/2014 Last Plotted 7/14/2014 3:21 PM Sheet N:\43274\DWG\24-01

Attached Xrefs: _TB22x34 - PUBLIC/TB22x34/06-R-T002/06-V-T001/06-R-T001

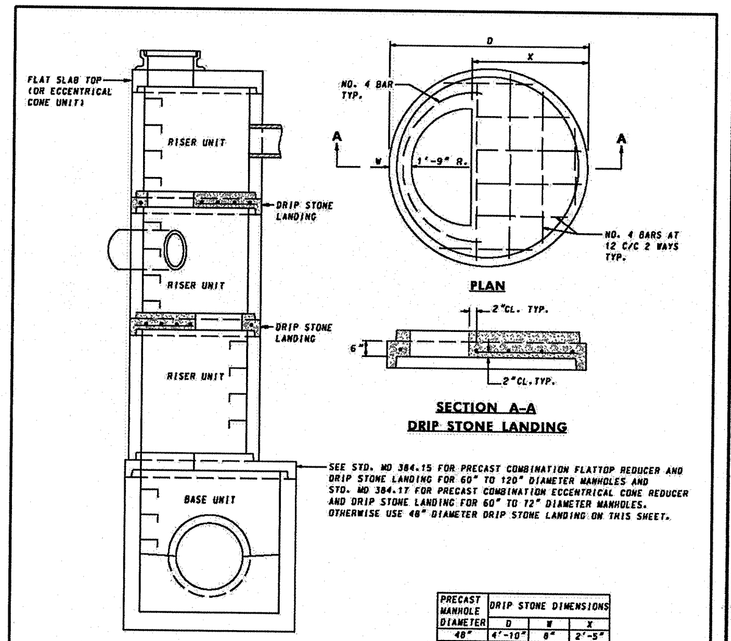

METHOD OF PLACING DRIP STONE LANDINGS

PLAN

SECTION A-A
DRIP STONE LANDING

PRECAST MANHOLE DIAMETER	DRIP STONE DIMENSIONS		
	D	W	X
48"	4'-10"	6"	2'-5"
60"	5'-0"	6"	3'-3"
72"	7'-2"	6"	4'-3"
84"	8'-4"	8"	5'-11"
96"	9'-6"	9"	7'-0"
120"	11'-8"	10"	9'-1"

NOTES

1. THE DRIP STONE LANDING SHALL BE USED ONLY WHEN THERE ARE PIPES CONNECTED TO THE RISER UNITS.
2. CONCRETE SHALL BE MIX NO.6 (4500 PSI).
3. REINFORCEMENT SHALL MEET ASTM A 615 GRADE 60.
4. THE MANUFACTURER SHALL FORM MALE AND FEMALE ENDS OF JOINTS USING THEIR OWN DESIGN.
5. LIFT EYES SHALL BE PROVIDED FOR HANDLING.
6. COST FOR THE DRIP STONE LANDING IS INCIDENTAL TO THE COST OF THE MANHOLE.

SPECIFICATION	CATEGORY CODE ITEMS
APPROVED	DIRECTOR - OFFICE OF HIGHWAY DEVELOPMENT

SHA State Highway Administration	APPROVAL + SHA REVISIONS	APPROVAL ‡ FEDERAL HIGHWAY ADMINISTRATION
APPROVAL	7-23-91	1-3-91
REVISED	15-1-91	REVISED
REVISED		REVISED
REVISED		REVISED

Maryland Department of Transportation
STATE HIGHWAY ADMINISTRATION
STANDARDS FOR HIGHWAYS AND INCIDENTAL STRUCTURES

PRECAST DRIP STONE LANDING DETAILS FOR 48" TO 120" DIAMETER MANHOLES

STANDARD NO. MD 384.13

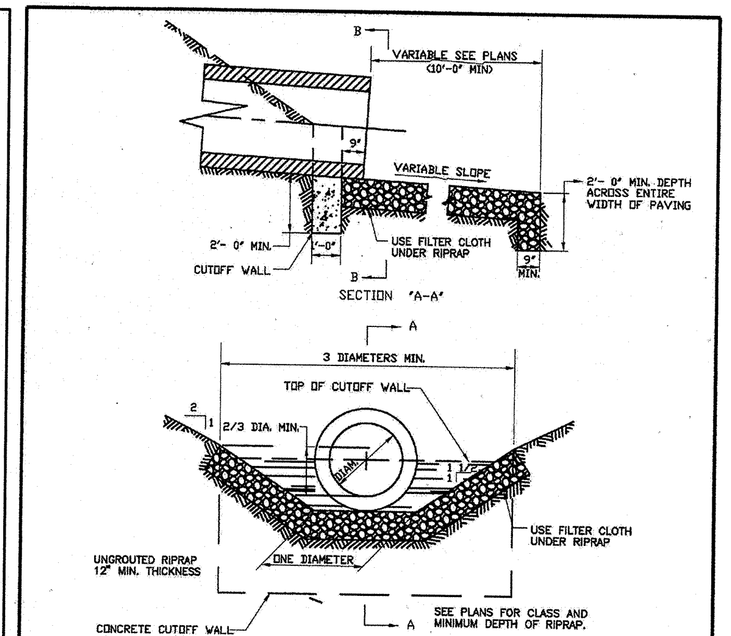

CUTOFF WALL AND RIPRAP PAVING

GENERAL NOTES

1. REFER TO MARYLAND STATE HIGHWAY ADMINISTRATION FOR MATERIALS AND METHODS OF CONSTRUCTION.
2. CHANNEL CROSS SECTION TO TRANSITION TO EXISTING DITCH AT END OF PAVING.
3. THIS STANDARD TO BE USED ONLY ON APPROVAL BY THE DEPARTMENT OF TRANSPORTATION.
4. INSTALL FILTER CLOTH UNDER RIPRAP.

APPROVED JAN 5 '96 DATE	REVISED
DIRECTOR, DEPT. OF TRANS.	
CHIEF, DIV. OF ENG. SERVICES	

MONTGOMERY COUNTY DEPARTMENT OF TRANSPORTATION

CUTOFF WALL WITH RIPRAP OUTFALL

STANDARD NO. MC-521.02

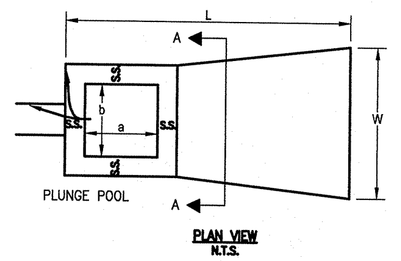

PLAN VIEW
N.T.S.

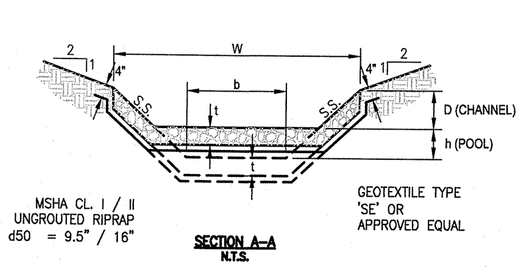

SECTION A-A
N.T.S.

RIRAP PLUNGE POOL AND CHANNEL DETAILS

STR. No.	PLUNGE POOL				t	CHANNEL			
	a	b	h	S.S.		L	W	D	S.S.
EW1	N/A	N/A	N/A	N/A	32"	35'	VARIES (3.5' TO 25')	VARIES (42" TO 0")	3:1
EW2	N/A	N/A	N/A	N/A	19.0"	16'	VARIES (2' TO 11')	VARIES (24" TO 0")	3:1

RIPRAP SCHEDULE (MCDOT MAINTAINED)

PUBLIC PIPE SCHEDULE (MCDOT MAINTAINED)

PIPE SIZE	TYPE	LENGTH (LF)
18"	RCP ASTM C-76 CL IV W / RUBBER GASKETS	39
24"	RCP ASTM C-76 CL IV W / RUBBER GASKETS	13
42"	RCP ASTM C-76 CL IV W / RUBBER GASKETS	61

PUBLIC STRUCTURE SCHEDULE (MCDOT MAINTAINED)

NO.	TYPE	COORDINATES		TOP ELEVATION		BASE DIAMETER	THROAT DESIGN	STEP LOCATION	REMARKS
		NORTHING	EASTING	UPPER	LOWER				
ES3	END SECTION	N 554774.89	E 1247244.70	INVERT =	370.98	-	-	-	EXISTING 42" R.C.P. END SECTION TO BE REMOVED
EW1	ENDWALL	N 554779.61	E 1247236.02	INVERT =	370.50	-	-	-	MD-358.01 (D=42")
EW2	ENDWALL	N 554798.87	E 1247291.82	INVERT =	369.00	-	-	-	MSHA STD 354.01 (D=36") MODIFIED FOR D=24", L=10'-3"
MH1	MANHOLE	N 554796.60	E 1247306.85	378.42	-	48"	-	-	MC-510.01
MH2	MANHOLE	N 554754.44	E 1247298.87	381.73	-	48"	-	-	MC-510.01 & MD-384.13 (DRIP STONE LANDING)
MH3	MANHOLE	N554727.26	E1247226.15	383.81	-	48"	-	-	EXISTING MANHOLE TO BE REMOVED
MH4	MANHOLE	N 554724.95	E 1247203.95	384.78	-	72"	-	-	MC-510.01 & MD-384.13 (DRIP STONE LANDING)

NOTES:

1. NO PIPE SHALL BE CONSTRUCTED INTO THE CORNER OF A SQUARE OR RECTANGULAR STORM DRAIN STRUCTURE (TO BE USED AS A SAFETY MEASURE), PER MSHA STD. No. MD-384.13 - SEE DETAIL ON THIS SHEET.
2. ALL PRECAST STRUCTURES AND SUPPLIERS OF "ALTERNATIVE EQUAL STRUCTURES" ARE TO BE PREVIOUSLY APPROVED BY MCDOT.
3. COORDINATES TO MANHOLES ARE TO CENTER OF STRUCTURE.
4. COORDINATES TO A-INLETS ARE TO CENTER OF STRUCTURE AT FRONT OF CURB.
5. COORDINATES TO ENDSECTION ARE TO CENTER OF LOWER FLARED END.
6. COORDINATES TO ENDWALL/HEADWALL ARE TO TOP CENTER OF WALL.

GENERAL NOTES:

1. THIS PLAN SHALL ONLY BE USED FOR THE CONSTRUCTION OF STORM DRAIN AND ASSOCIATED STORM DRAIN IMPROVEMENTS WITHIN THE PUBLIC RIGHT-OF-WAY AND/OR EASEMENT AS SHOWN. THIS PLAN IS NOT TO BE USED FOR ANY OTHER CONSTRUCTION PURPOSE.

MISS UTILITY

Call "Miss Utility" at 1-800-257-7777, 48 hours prior to the start of work. The excavator must notify all public utility companies with underground facilities in the area of proposed excavation and have those facilities located by the utility companies prior to commencing excavation. The excavator is responsible for compliance with requirements of Chapter 36A of the Montgomery County Code.

GRAPHIC SCALE
2 0 1 2 4
SCALE: 1" = 2'

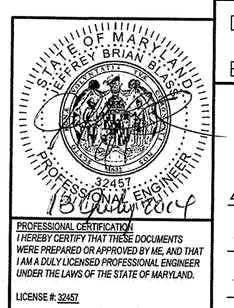

PROFESSIONAL CERTIFICATION
I HEREBY CERTIFY THAT THESE DOCUMENTS WERE PREPARED OR APPROVED BY ME, AND THAT I AM A DULY LICENSED PROFESSIONAL ENGINEER UNDER THE LAWS OF THE STATE OF MARYLAND.
LICENSE # 32457
EXPIRATION DATE: 06/20/2016

DPS PERMIT # 306289

MONTGOMERY COUNTY, MARYLAND DEPARTMENT OF PERMITTING SERVICES

FINAL APPROVAL

DATE: _____ 19 ____

BY: _____

*SUBJECT TO DEDICATION OF RIGHT OF WAY AND EASEMENTS PER COUNTY CODE SECTION 50.

REVISION APPROVALS

△ _____

⊙ _____

⊥ _____

STORM DRAIN DETAILS

REGIONAL STORMWATER MANAGEMENT
POND REPAIR AND RETROFIT (2014)

CHADSWOOD

GERMANTOWN (9th) ELECTION DISTRICT
MONTGOMERY COUNTY, MARYLAND

CPJ Associates **Charles P. Johnson & Associates, Inc.**
Civil and Environmental Engineers • Planners • Landscape Architects • Surveyors
1751 Elton Rd., Ste. 300 Silver Spring, MD 20903 301-434-7000 Fax: 301-434-9394
www.cpja.com • Silver Spring, MD • Gaithersburg, MD • College Park, MD • Frederick, MD • Fairfax, VA

CLIENT: MONTGOMERY COUNTY
DEPARTMENT OF ENVIRONMENTAL PROTECTION
255 ROCKVILLE PIKE SUITE 120
ROCKVILLE, MARYLAND 20850
CONTACT: GENE GOPENKO, P.E.
PHONE:(240) 777-7723

COPYRIGHT © LATEST DATE HEREON CHARLES P. JOHNSON & ASSOCIATES, INC. ALL RIGHTS RESERVED, UNAUTHORIZED USE OR REPRODUCTION IS PROHIBITED.

PRELIMINARY PLAN NO:	N/A
SITE PLAN NO:	N/A
DESIGN	JBB
DRAFT	ADG
DATE	JULY, 2014
SCALE	AS-SHOWN
SHEET	21 OF 21
	SD-3 SD-3
FILE NO:	43-274-24.1

Last Saved 7/14/2014 Last Plotted 7/14/2014 4:12 PM Sheet N:\43274\DWG\24-01 Attached Xrefs: _TB22x34 - PUBLIC/TB22x34/06-R-T002/06-V-T001/06-R-T001