Typical Section (NOT TO SCALE)

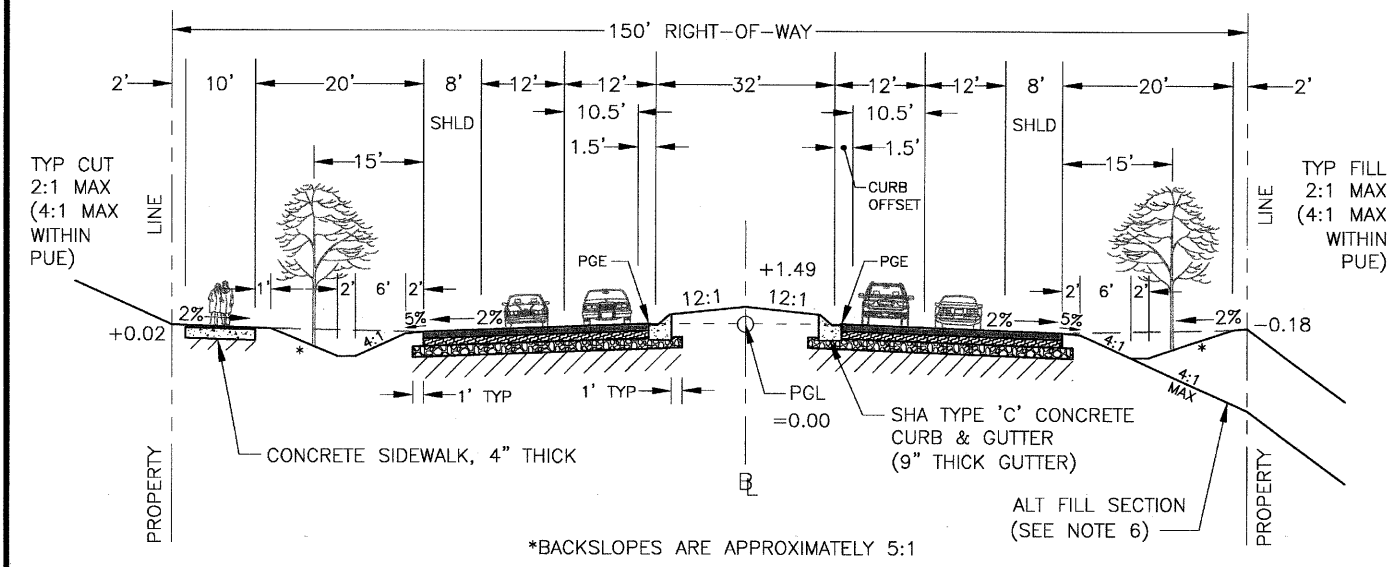

Paving Detail

	3" BITUMINOUS CONCRETE SURFACE (TWO EQUAL LAYERS)
	3" BITUMINOUS CONCRETE BASE
	6" GRADED AGGREGATE BASE (TWO EQUAL LAYERS)
	APPROVED SUBGRADE

Design Data

GEOMETRIC DESIGN SHALL CONFORM TO MOST RECENT AASHTO "GREEN BOOK" METHODS.

TARGET SPEED (MPH)	SUPERELEVATION DISTRIBUTION	MAX GRADE
45	AASHTO METHOD 5 (6% MAX)	5 ½ %
50	AASHTO METHOD 5 (6% MAX)	5%

General Notes

1. LATEST EDITION OF THE MARYLAND STATE HIGHWAY ADMINISTRATION SPECIFICATIONS SHALL APPLY FOR MATERIALS AND METHODS OF CONSTRUCTION.
2. PUBLIC UTILITY EASEMENTS (PUEs) ARE SUBJECT TO "DECLARATIONS OF TERMS AND PROVISIONS OF PUBLIC UTILITY EASEMENTS" RECORDED AS LIBER 3834, FOLIO 457 IN THE LAND RECORDS OF MONTGOMERY COUNTY.
3. DRIVEWAY ACCESS IS NOT PERMITTED ON PARKWAYS.
4. PAVING DETAIL DEPICTS THE MINIMUM REQUIRED SECTION. IF SUFFICIENT SUBGRADE SUPPORT IS NOT ASSURED, AN ENGINEERED PAVING DESIGN USING SHA METHODOLOGY WILL BE REQUIRED.
5. NOTE THAT WITHIN A GIVEN CONTEXT, THIS STANDARD MAY NEED TO BE MODIFIED TO PROVIDE ADDITIONAL REQUIRED FEATURES SUCH AS MASTER PLANNED BIKEWAYS, AUXILIARY LANES AT INTERSECTIONS, OR STORMWATER MANAGEMENT FACILITIES. ADDITIONAL RIGHT-OF-WAY MAY BE NECESSARY TO ACCOMMODATE SUCH FEATURES.
6. NOTE THAT ROADWAY SECTION IS NOT SYMMETRICAL RELATIVE TO BASELINE. ACTUAL ORIENTATION OF LEFT AND RIGHT IS SUBJECT TO COUNTY REVIEW AND APPROVAL.
7. THE SIDE DITCH IN FILL SLOPES MAY BE ELIMINATED IN AREAS WHERE SIDEWALKS ARE NOT REQUIRED ONLY AFTER OVERLAND FLOW PATH AND EROSION POTENTIAL ARE CONSIDERED.
8. SELECTION OF APPROPRIATE TARGET SPEED (EQUAL OR SLIGHTLY LESS THAN DESIGN SPEED) IS SUBJECT TO COUNTY REVIEW AND APPROVAL. APPROVED TARGET AND DESIGN SPEEDS MUST APPEAR ON CONSTRUCTION DRAWINGS.
9. ALL UNPAVED AREAS WITHIN THE LIMITS OF DISTURBANCE SHALL BE STABILIZED WITH ESTABLISHED GRASS TURF OR APPROVED LANDSCAPING.
10. STREET TREES OF APPROVED TYPE, SIZE AND SPACING SHALL BE PLANTED AT LOCATIONS SHOWN.
11. TRUCKS WITH MORE THAN FOUR WHEELS ARE NOT PERMITTED ON PARKWAYS.

STANDARD DEVELOPED AND IMPLEMENTED IN CONFORMANCE WITH COUNCIL RESOLUTION 16-809 ADOPTED DEC. 9, 2008

DIRECTOR, DEPARTMENT OF TRANSPORTATION — DATE 25 JUN 12

CHIEF, DIVISION OF TRANSPORTATION ENGINEERING — DATE 6/21/2012

MONTGOMERY COUNTY
DEPARTMENT OF TRANSPORTATION

RURAL PARKWAY
OPEN SECTION: 45 & 50 MPH

STANDARD NO. MC-2007.03B