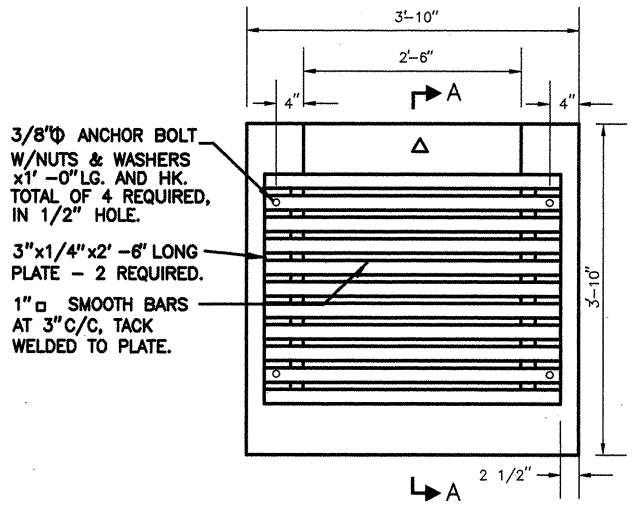

"PLAN"

△ PROVIDE OPENING IN UPSTREAM SIDE ONLY, EXCEPT WHEN LOCATED IN SUMP.

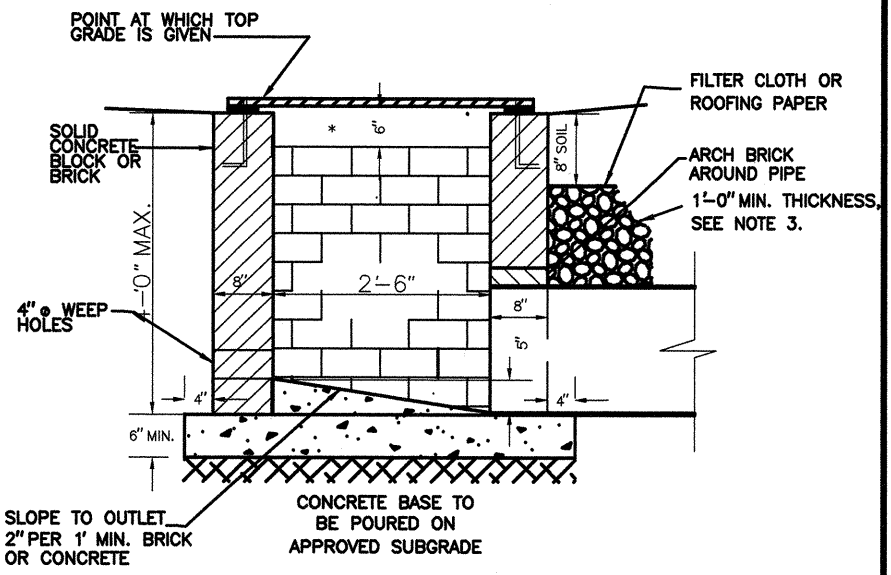

* OPENINGS MAY BE PLACED IN ANY OR ALL SIDES AS SPECIFIED

SECTION "A-A"

GENERAL NOTES

1. E INLET TO BE USED AS TERMINAL INLETS ONLY.
2. USE SOLID MASONRY (BRICK OR CONCRETE BLOCK) OR POURED CONCRETE FOR WALLS.
3. INSTALL FOUNDATION DRAINAGE MATERIAL AROUND STRUCTURE FROM BOTTOM OF WEEP HOLES TO WITHIN 8" OF SURFACE. MIN 1' FROM WALL.
4. WEEP HOLES TO BE PLACED IN WALL OPPOSITE OUTLET PIPE 5" ABOVE PIPE INVERT. COVER OPENING WITH 1/2" HARDWARE CLOTH.
5. MORTAR SHALL CONFORM TO ASTM SPECIFICATION C 270 TYPE M.
6. REFER TO MARYLAND STATE HIGHWAY ADMINISTRATION FOR MATERIALS AND METHODS OF CONSTRUCTION.
7. f'c=3,500 PSI AT 28 DAYS.

APPROVED JAN 5/96 DATE DIRECTOR, DEPT. OF TRANS. CHIEF, DIV. OF ENG. SERVICES	REVISED	MONTGOMERY COUNTY DEPARTMENT OF TRANSPORTATION "E" INLET STANDARD NO. MC-504.01

P:\DOTSTD\STDSEED 7-1-94 11:26:59 am EST