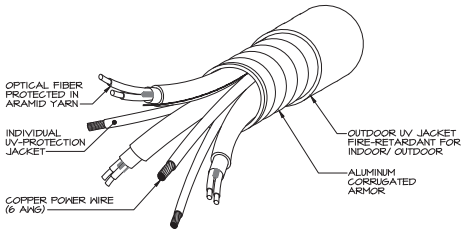

HYBRIFLEX CABLE CONSTRUCTION

NO SCALE

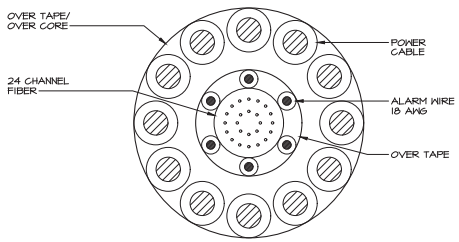

NOTES

1. USED FROM MAIN BOTTOM DISTRIBUTION BOX TO MAIN TOP DISTRIBUTION BOX.
2. 6 PAIRS OF #6 AWG DC WIRE (3 PAIRS NEEDED FOR TODAY, 3 PAIRS FOR FUTURE GROWTH).
3. 12 PAIRS OF SM FIBER (3 PAIRS NEEDED FOR TODAY, 3 PAIRS FOR FUTURE GROWTH, 6 PAIRS ARE SPARES).
4. 9 PAIRS OF 18 AWG ALARM WIRE.

DETAIL - 6x12 HYBRIFLEX CABLE (1 1/4")

NO SCALE

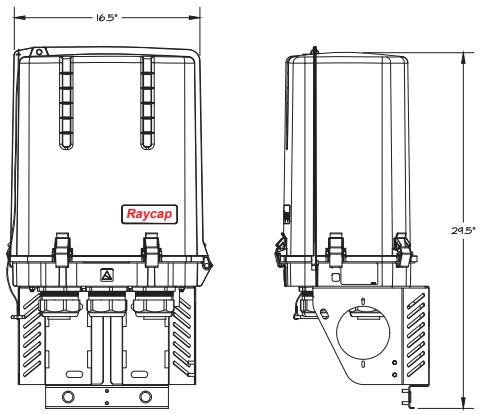

FRONT VIEW

SIDE VIEW

BOTTOM VIEW

MANUFACTURER:	RAYCAP
MODEL #:	RVZDC-6627-PF-48 (12 OVP)
DIMENSIONS:	12.6"D X 16.5"W X 29.5"H
WEIGHT:	32 LBS (SYSTEM)

DETAIL - MAIN DISTRIBUTION BOX

NO SCALE (12 OVP)

Feed Hybrid trunk through Insert.

Feed enough of the cable to strip and connect to power connectors.

Connect wires according to the *Verizon Wireless established color guide.*

Note:
Bring all cables through cable glands. Ensure all fiber is separated and out of the way during copper wire installation.

To assist in ease of wiring, proceed by wiring in the following order:

1st: OVP #1 and OVP #7
2nd: OVP #2 and OVP #8
3rd: OVP #3 and OVP #9
4th: OVP #4 and OVP #10
5th: OVP #5 and OVP #11
6th: OVP #6 and OVP #12

Torque: 40 in-lbs (10-6 AWG)

Circuit	Identification Color	-48V	RTN
1, 7	Blue		
2, 8	Violet		
3, 9	Green		
4, 10	Brown		
5, 11	Yellow		
6, 12	White		

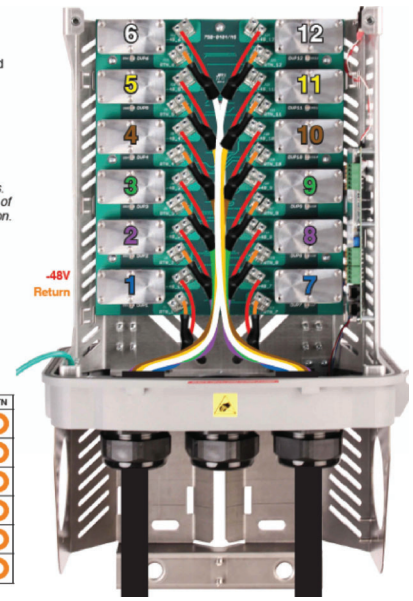

DETAIL- RAYCAP 12-OVP IDENTIFIERS

NO SCALE

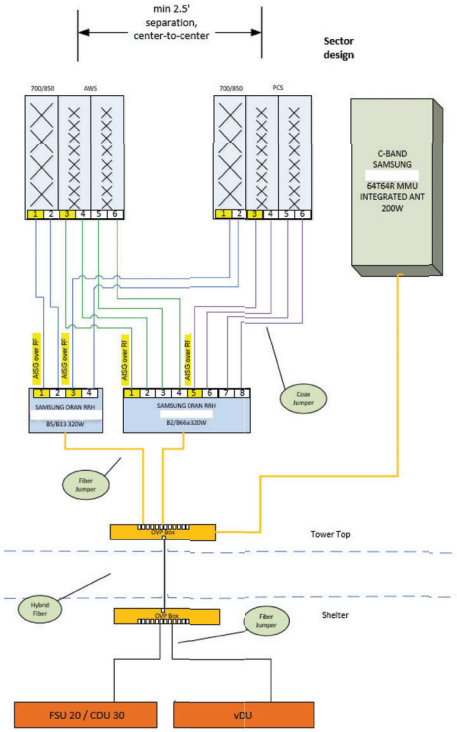

DETAIL - ANTENNA PLUMBING DIAGRAM

NO SCALE

TEI

TELEGENT ENGINEERING INC
2216 Commerce Road, Suite 1
Forest Hill, MD 21050
410-692-5816
www.tel-eng.com

01/10/2025

I HEREBY CERTIFY THAT THESE DOCUMENTS WERE PREPARED OR APPROVED BY ME, TIMOTHY SHIDT, AND THAT I AM A DULY LICENSED PROFESSIONAL ENGINEER UNDER THE LAWS OF THE STATE OF MARYLAND. LICENSE NO. 21565, EXPIRATION DATE: MAY 8, 2025.

verizon
WOODSIDE TEMP RELO
CORNER OF I-495 & SR97, SILVER SPRING, MONTGOMERY COUNTY, MARYLAND 20910

REVISIONS:

NO.	DESCRIPTION	DATE
	COUNTY COMMENTS	01/10/25
	OZAH COMMENTS	11/12/24

LAST REV.:
PROJECT NO: 240878
DATE: NOV. 12, 2024
SCALE: AS NOTED

TITLE:
HYBRIFLEX DETAILS AND DIAGRAM

SHEET:
E-7

TEI#240878

Exhibit 20
OZAH Case No: CU 25-05